SN74LV595A-Q1 8-Bit Shift Registers With 3-State Output Registers

1 Features

- Qualified for automotive applications
- Available in wettable flank QFN (WBQB) package
- Customer-specific configuration control can be supported along with major-change approval
- 2-V to 5.5-V V_{CC} operation
- Typical V_{OLP} (output ground bounce) < 0.8 V at V_{CC} = 3.3 V, T_A = 25°C
- Typical V_{OHV} (output V_{OH} undershoot) > 2.3 V at V_{CC} = 3.3 V, T_A = 25°C
- Supports mixed-mode voltage operation on all ports
- 8-bit serial-in, parallel-out shift
- I_{off} supports partial-power-down mode operation
- Shift register has direct clear

2 Applications

- Output expansion
- LED matrix control
- 7-segment display control

3 Description

The SN74LV595A-Q1 contains an 8-bit serial-in, parallel-out shift register that feeds an 8-bit D-type storage register. The storage register has parallel 3-state outputs. Separate clocks are provided for both the shift and storage register. The shift register has a direct overriding clear ($\overline{SRCLR}$) input, serial (SER) input, and a serial output for cascading. When the output-enable ($\overline{OE}$) input is high, all outputs except $Q_{H'}$ are in the high-impedance state.

The device is fully specified for partial-power-down applications using I_{off}. The I_{off} circuitry disables the outputs, preventing damaging current backflow through the device when it is powered down.

Package Information(1)

PART NUMBER	PACKAGE	BODY SIZE (NOM)
SN74LV595A-Q1	PW (TSSOP, 16)	5.00 mm × 4.40 mm
	WBQB (WQFN, 16)	3.60 mm × 2.60 mm

(1) For all available packages, see the orderable addendum at the end of the data sheet.

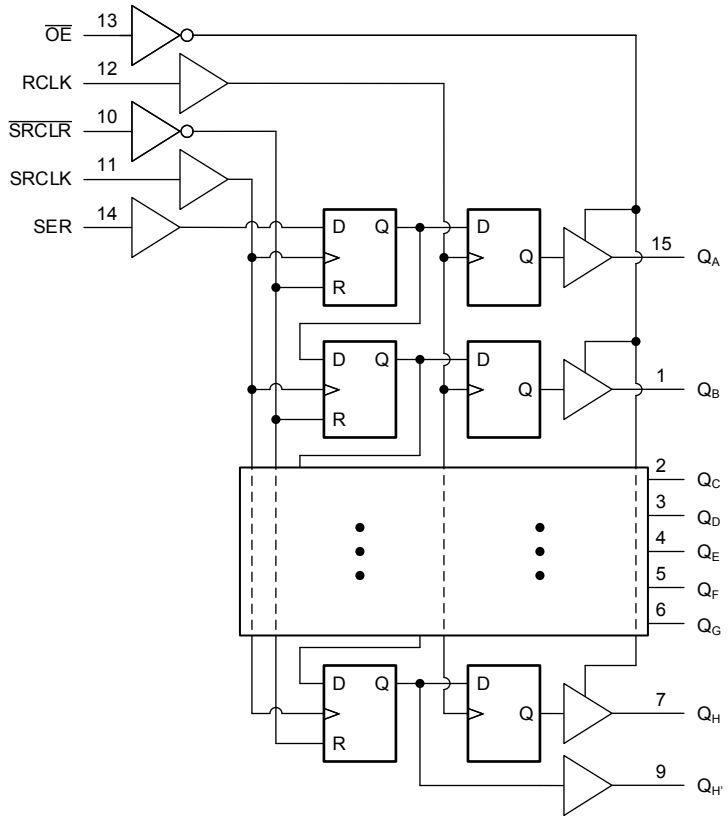

Logic Diagram (Positive Logic)

An IMPORTANT NOTICE at the end of this data sheet addresses availability, warranty, changes, use in safety-critical applications, intellectual property matters and other important disclaimers. UNLESS OTHERWISE NOTED, this document contains PRODUCTION DATA.

Table of Contents

1 Features....1
2 Applications....1
3 Description....1
4 Revision History....2
5 Pin Configuration and Functions....3
6 Specifications....4
6.1 Absolute Maximum Ratings....4
6.2 ESD Ratings....4
6.3 Recommended Operating Conditions....5
6.4 Thermal Information....5
6.5 Electrical Characteristics....6
6.6 Timing Requirements, V_{CC} = 2.5 V ± 0.2 V....6
6.7 Timing Requirements, V_{CC} = 3.3 V ± 0.3 V....7
6.8 Timing Requirements, V_{CC} = 5 V ± 0.5 V....7
6.9 Switching Characteristics, V_{CC} = 2.5 V ± 0.2 V....7
6.10 Switching Characteristics, V_{CC} = 3.3 V ± 0.3 V....8
6.11 Switching Characteristics, V_{CC} = 5 V ± 0.5 V....8
6.12 Timing Diagrams....9
6.13 Noise Characteristics....9
6.14 Operating Characteristics....10
6.15 Typical Characteristics....10
7 Parameter Measurement Information....11
8 Detailed Description....12
8.1 Overview....12
8.2 Functional Block Diagram....12
8.3 Feature Description....13
8.4 Device Functional Modes....15
9 Application and Implementation....16
9.1 Application Information....16
9.2 Typical Application....16
9.3 Power Supply Recommendations....19
9.4 Layout....19
10 Device and Documentation Support....20
10.1 Documentation Support....20
10.2 Receiving Notification of Documentation Updates....20
10.3 Support Resources....20
10.4 Trademarks....20
10.5 Electrostatic Discharge Caution....20
10.6 Glossary....20
11 Mechanical, Packaging, and Orderable Information....20

4 Revision History

NOTE: Page numbers for previous revisions may differ from page numbers in the current version.

Changes from Revision F (November 2022) to Revision G (March 2023)	Page
• Updated structural layout of document to current standards	1
• Updated thermal values for PW package from RθJA = 108 to 138.7, RθJC(top) = 40.8 to 69.1, RθJB = 51.1 to 81.8, ΨJT = 3.8 to 20.3, ΨJB = 50.6 to 81.3, all values in °C/W	5

Changes from Revision E (June 2022) to Revision F (November 2022)	Page
• Changed the status of the data sheet from: *Advanced Information* to: *Production Data*	1

Copyright © 2023 Texas Instruments Incorporated

5 Pin Configuration and Functions

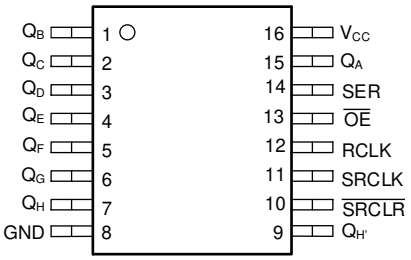

Figure 5-1. PW Package, 16-Pin TSSOP (Top View)

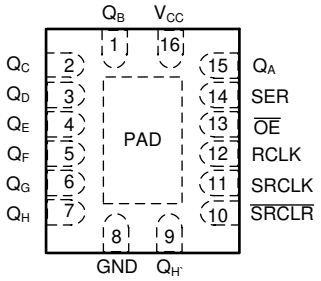

Figure 5-2. WBQB Package, 16-Pin WQFN Transparent (Top View)

Table 5-1. Pin Functions

PIN		TYPE[1]	DESCRIPTION
NAME	NO.		
GND	8	G	Ground
$\overline{OE}$	13	I	Output Enable Pin
Q_A	15	O	Q_A Output
Q_B	1	O	Q_B Output
Q_C	2	O	Q_C Output
Q_D	3	O	Q_D Output
Q_E	4	O	Q_E Output
Q_F	5	O	Q_F Output
Q_G	6	O	Q_G Output
Q_H	7	O	Q_H Output
$Q_{H'}$	9	O	$Q_{H'}$ Output
$\overline{SRCLR}$	10	I	$\overline{SRCLR}$ Input
SRCLK	11	I	SRCLK Input
RCLK	12	I	RCLK Input
SER	14	I	SER Input
V_{CC}	16	P	Positive Supply
PAD	—	—	Thermal Pad[2]

(1) I = Input, O = Output, I/O = Input or Output, G = Ground, P = Power.
(2) WBQB Package Only

Copyright © 2023 Texas Instruments Incorporated

6 Specifications

6.1 Absolute Maximum Ratings

over operating free-air temperature range (unless otherwise noted)[1]

			MIN	MAX	UNIT
V_{CC}	Supply voltage range		–0.5	7.0	V
V_I	Input voltage range[2]		–0.5	7.0	V
V_O	Voltage range applied to any output in the high-impedance or power-off state[2]		–0.5	4.6	V
	Output voltage range applied to any output in the high or low state[2] [3]		–0.5	V_{CC} + 0.5	V
I_{IK}	Input clamp current[2]	V_I < 0		–20	mA
I_{OK}	Output clamp current[2]	V_O < 0		-50	mA
I_O	Continuous output current			±35	mA
	Continuous current through V_{CC} or GND			±70	mA
T_J	Junction temperature			150	°C
T_{stg}	Storage temperature		–65	150	°C

(1) Stresses beyond those listed under *Absolute Maximum Ratings* may cause permanent damage to the device. These are stress ratings only, and functional operation of the device at these or any other conditions beyond those indicated under *Recommended Operating Conditions* is not implied. Exposure to absolute-maximum-rated conditions for extended periods may affect device reliability.
(2) The input negative-voltage and output voltage ratings may be exceeded if the input and output current ratings are observed.
(3) The package thermal impedance is calculated in accordance with JESD 51-7.

6.2 ESD Ratings

			VALUE	UNIT
$V_{(ESD)}$	Electrostatic discharge	Human-body model (HBM), per AEC Q100-002 HBM ESD Classification Level 2[1]	±2000	V
		Machine Model (MM), per JEDEC specification	±200	
		Charged-device model (CDM), per AEC Q100-011 CDM ESD Classification Level C4B	±1000	

(1) AEC Q100-002 indicate that HBM stressing shall be in accordance with the ANSI/ESDA/JEDEC JS-001 specification.

Copyright © 2023 Texas Instruments Incorporated

6.3 Recommended Operating Conditions

			MIN	MAX	UNIT
V_{CC}	Supply voltage		2	5.5	V
V_{IH}	High-level input voltage	V_{CC} = 2 V	1.5		V
		V_{CC} = 2.3 V to 2.7 V	V_{CC} × 0.7		
		V_{CC} = 3 V to 3.6 V	V_{CC} × 0.7		
		V_{CC} = 4.5 V to 5.5 V	V_{CC} × 0.7		
V_{IL}	Low-level input voltage	V_{CC} = 2 V		0.5	V
		V_{CC} = 2.3 V to 2.7 V		V_{CC} × 0.3	
		V_{CC} = 3 V to 3.6 V		V_{CC} × 0.3	
		V_{CC} = 4.5 V to 5.5 V		V_{CC} × 0.3	
V_I	Input voltage(1)		0	5.5	V
V_O	Output voltage	High or low state	0	V_{CC}	V
		3-state	0	5.5	
I_{OH}	High level output current	V_{CC} = 2 V		–50	µA
		V_{CC} = 2.3 V to 2.7 V		–2	mA
		V_{CC} = 3 V to 3.6 V		–8	
		V_{CC} = 4.5 V to 5.5 V		–16	
I_{OL}	Low level output current	V_{CC} = 2 V		50	µA
		V_{CC} = 2.3 V to 2.7 V		2	mA
		V_{CC} = 3 V to 3.6 V		8	
		V_{CC} = 4.5 V to 5.5 V		16	
Δt/Δv	Input transition rise/fall time	V_{CC} = 2.3 V to 2.7 V		200	ns/V
		V_{CC} = 3 V to 3.6 V		100	
		V_{CC} = 4.5 V to 5.5 V		20	
T_A	Operating free-air temperature	SN74LV595AIPWRQ1	–40	85	°C
		SN74LV595AQPWRQ1 or SN74LV595AQWBQRQ1	–40	125	

(1) All unused inputs of the device must be held at V_{CC} or GND to ensure proper device operation. See the TI application report, *Implications of Slow or Floating CMOS Inputs*.

6.4 Thermal Information

THERMAL METRIC(1)		SN74LV595A-Q1		UNIT
		PW (TSSOP)	WBQB (WQFN)	
		16 PINS	16 PINS	
$R_{\theta JA}$	Junction-to-ambient thermal resistance	138.7	86	°C/W
$R_{\theta JC(top)}$	Junction-to-case (top) thermal resistance	69.1	82.6	°C/W
$R_{\theta JB}$	Junction-to-board thermal resistance	81.8	54.9	°C/W
Ψ_{JT}	Junction-to-top characterization parameter	20.3	9.5	°C/W
Ψ_{JB}	Junction-to-board characterization parameter	81.3	54.9	°C/W
$R_{\theta JC(bot)}$	Junction-to-case (bottom) thermal resistance	N/A	32.5	°C/W

(1) For more information about traditional and new thermal metrics, see the *IC Package Thermal Metrics* application report, SPRA953.

Copyright © 2023 Texas Instruments Incorporated

6.5 Electrical Characteristics

over recommended operating free-air temperature range (unless otherwise noted)

PARAMETER	TEST CONDITIONS		V_{CC}	–40°C to 85°C			–40°C to 125°C			UNIT
				MIN	TYP	MAX	MIN	TYP	MAX	
V_{OH}		I_{OH} = –50 µA	2 V to 5.5 V	V_{CC} – 0.1			V_{CC} – 0.1			V
		I_{OH} = –2 mA	2.3 V	2			2			
	$Q_{H'}$	I_{OH} = –6 mA	3 V	2.48			2.45			
	Q_A –Q_H	I_{OH} = –8 mA		2.48			2.45			
	$Q_{H'}$	I_{OH} = –12 mA	4.5 V	3.8			3.7			
	Q_A–Q_H	I_{OH} = –16 mA		3.8			3.7			
V_{OL}		I_{OL} = 50 µA	2 V to 5.5 V			0.1			0.1	V
		I_{OL} = 2 mA	2.3 V			0.4			0.45	
	$Q_{H'}$	I_{OL} = 6 mA	3 V			0.44			0.5	
	Q_A–Q_H	I_{OL} = 8 mA				0.44			0.5	
	$Q_{H'}$	I_{OL} = 12 mA	4.5 V			0.55			0.65	
	Q_A–Q_H	I_{OL} = 16 mA				0.55			0.65	
I_I	V_I = 5.5 V or GND		0 to 5.5 V			±1			±1	µA
I_{OZ}	Q_A – Q_H	V_O = V_{CC} or GND,	5.5 V			±5			±10	µA
I_{CC}	V_I = V_{CC} or GND, I_O = 0		5.5 V			20			40	µA
I_{off}	V_I or V_O = 0 to 5.5 V		0 V			5			10	µA
C_i	V_I = V_{CC} or GND		3.3 V		3.5			3.5		pF

6.6 Timing Requirements, V_{CC} = 2.5 V ± 0.2 V

over operating free-air temperature range (unless otherwise noted)

			T_A = 25°C		T_A = –40°C TO 85°C		T_A = –40°C TO 125°C		UNIT
			MIN	MAX	MIN	MAX	MIN	MAX	
t_w	Pulse duration	SRCLK high or low	7		7.5		8.5		ns
		RCLK high or low	7		7.5		8.5		
		$\overline{\text{SRCLR}}$ low	6		6.5		7.5		
t_{su}	Setup time	SER before SRCLK↑	5.5		5.5		6.5		ns
		SRCLK↑ before RCLK↑[(1)]	8		9		10		
		$\overline{\text{SRCLR}}$ low before RCLK↑	8.5		9.5		10.5		
		$\overline{\text{SRCLR}}$ high (inactive) before SRCLK↑	4		4		5		
t_h	Hold time	SER after SRCLK↑	1.5		1.5		2.5		ns

(1) This setup time allows the storage register to receive stable data from the shift register. The clocks can be tied together, in which case the shift register is one clock pulse ahead of the storage register.

Copyright © 2023 Texas Instruments Incorporated

6.7 Timing Requirements, V_{CC} = 3.3 V ± 0.3 V

over operating free-air temperature range (unless otherwise noted)

			T_A = 25°C		T_A = −40°C TO 85°C		T_A = −40°C TO 125°C		UNIT
			MIN	MAX	MIN	MAX	MIN	MAX	
t_w	Pulse duration	SRCLK high or low	5.5		5.5		6.5		ns
		RCLK high or low	5.5		5.5		6.5		
		$\overline{SRCLR}$ low	5		5		6		
t_{su}	Setup time	SER before SRCLK↑	3.5		3.5		4.5		ns
		SRCLK↑ before RCLK↑(1)	8		8.5		9.5		
		$\overline{SRCLR}$ low before RCLK↑	8		9		10		
		$\overline{SRCLR}$ high (inactive) before SRCLK↑	3		3		4		
t_h	Hold time	SER after SRCLK↑	1.5		1.5		2.5		ns

(1) This setup time allows the storage register to receive stable data from the shift register. The clocks can be tied together, in which case the shift register is one clock pulse ahead of the storage register.

6.8 Timing Requirements, V_{CC} = 5 V ± 0.5 V

over operating free-air temperature range (unless otherwise noted)

			T_A = 25°C		T_A = −40°C TO 85°C		T_A = −40°C TO 125°C		UNIT
			MIN	MAX	MIN	MAX	MIN	MAX	
t_w	Pulse duration	SRCLK high or low	5		5		6		ns
		RCLK high or low	5		5		6		
		$\overline{SRCLR}$ low	5.2		5.2		6.2		
t_{su}	Setup time	SER before SRCLK↑	3		3		4		ns
		SRCLK↑ before RCLK↑(1)	5		5		6		
		$\overline{SRCLR}$ low before RCLK↑	5		5		6		
		$\overline{SRCLR}$ high (inactive) before SRCLK↑	2.5		2.5		3.5		
t_h	Hold time	SER after SRCLK↑	2		2		3		ns

(1) This setup time allows the storage register to receive stable data from the shift register. The clocks can be tied together, in which case the shift register is one clock pulse ahead of the storage register.

6.9 Switching Characteristics, V_{CC} = 2.5 V ± 0.2 V

over recommended operating free-air temperature range, C_L = 50 pF (unless otherwise noted)

PARAMETER	FROM (INPUT)	TO (OUTPUT)	T_A = 25°C			T_A = −40°C TO 85°C		T_A = −40°C TO 125°C		UNIT
			MIN	TYP	MAX	MIN	MAX	MIN	MAX	
f_{max}			60	70		40		30		MHz
t_{PLH}	RCLK	Q_A–Q_H		11.2	17.2	1	19.3	1	22.3	ns
t_{PHL}				11.2	17.2	1	19.3	1	22.3	ns
t_{PLH}	SRCLK	$Q_{H'}$		13.1	22.5	1	25.5	1	28.5	ns
t_{PHL}				13.1	22.5	1	25.5	1	28.5	ns
t_{PHL}	$\overline{SRCLR}$	$Q_{H'}$		12.4	18.8	1	21.1	1	24.1	ns
t_{PZH}	$\overline{OE}$	Q_A–Q_H		10.8	17	1	18.3	1	21.3	ns
t_{PZL}				13.4	21	1	23	1	26	ns
t_{PHZ}	$\overline{OE}$	Q_A–Q_H		12.2	18.3	1	19.5	1	22.5	ns
t_{PLZ}				14	20.9	1	22.6	1	25.6	ns

Copyright © 2023 Texas Instruments Incorporated

6.10 Switching Characteristics, V_{CC} = 3.3 V ± 0.3 V

over recommended operating free-air temperature range, C_L = 50 pF (unless otherwise noted)

PARAMETER	FROM (INPUT)	TO (OUTPUT)	T_A = 25°C			T_A = −40°C TO 85°C		T_A = −40°C TO 125°C		UNIT
			MIN	TYP	MAX	MIN	MAX	MIN	MAX	
f_{max}			55	105		50		40		MHz
t_{PLH}	RCLK	Q_A–Q_H		7.9	15.4	1	17	1	20	ns
t_{PHL}				7.9	15.4	1	17	1	20	ns
t_{PLH}	SRCLK	$Q_{H'}$		9.2	16.5	1	18.5	1	21.5	ns
t_{PHL}				9.2	16.5	1	18.5	1	21.5	ns
t_{PHL}	$\overline{SRCLR}$	$Q_{H'}$		9	16.3	1	17.2	1	20.2	ns
t_{PZH}	$\overline{OE}$	Q_A–Q_H		7.8	15	1	17	1	20	ns
t_{PZL}				9.6	15	1	17	1	20	ns
t_{PHZ}	$\overline{OE}$	Q_A–Q_H		8.1	15.7	1	16.2	1	19.2	ns
t_{PLZ}				9.3	15.7	1	16.2	1	19.2	ns

6.11 Switching Characteristics, V_{CC} = 5 V ± 0.5 V

over recommended operating free-air temperature range, C_L = 50 pF (unless otherwise noted)

PARAMETER	FROM (INPUT)	TO (OUTPUT)	T_A = 25°C			T_A = −40°C TO 85°C		T_A = −40°C TO 125°C		UNIT
			MIN	TYP	MAX	MIN	MAX	MIN	MAX	
f_{max}			95	140		85		75		MHz
t_{PLH}	RCLK	Q_A–Q_H		5.6	9.4	1	10.5	1	13.5	ns
t_{PHL}				5.6	9.4	1	10.5	1	13.5	ns
t_{PLH}	SRCLK	$Q_{H'}$		6.4	10.2	1	11.4	1	14.4	ns
t_{PHL}				6.4	10.2	1	11.4	1	14.4	ns
t_{PHL}	$\overline{SRCLR}$	$Q_{H'}$		6.4	10	1	11.1	1	14.1	ns
t_{PZH}	$\overline{OE}$	Q_A–Q_H		5.7	10.6	1	12	1	15	ns
t_{PZL}				6.8	10.6	1	12	1	15	ns
t_{PHZ}	$\overline{OE}$	Q_A–Q_H		3.5	10.3	1	11	1	14	ns
t_{PLZ}				3.4	10.3	1	11	1	14	ns

Copyright © 2023 Texas Instruments Incorporated

6.12 Timing Diagrams

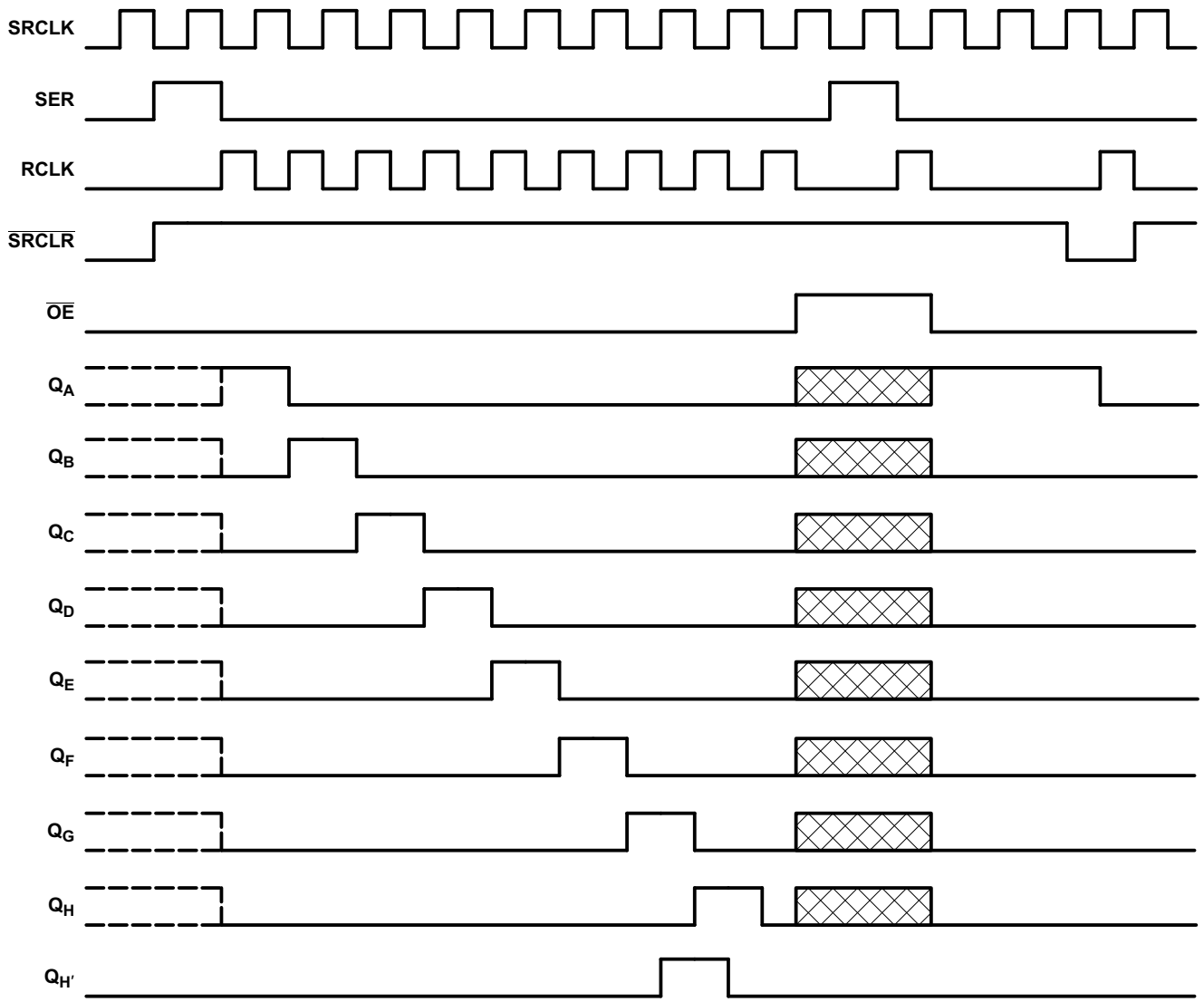

NOTE: implies that the output is in 3-State mode.

Copyright © 2016, Texas Instruments Incorporated

Figure 6-1. Timing Diagram

6.13 Noise Characteristics

V_{CC} = 3.3 V, C_L = 50 pF, T_A = 25°C[(1)]

PARAMETER		MIN	TYP	MAX	UNIT
$V_{OL(P)}$	Quiet output, maximum dynamic V_{OL}		0.3		V
$V_{OL(V)}$	Quiet output, minimum dynamic V_{OL}		–0.2		V
$V_{OH(V)}$	Quiet output, minimum dynamic V_{OH}		2.8		V
$V_{IH(D)}$	High-level dynamic input voltage	2.31			V
$V_{IL(D)}$	Low-level dynamic input voltage			0.99	V

(1) Characteristics are for surface-mount packages only.

6.14 Operating Characteristics

T_A = 25°C

PARAMETER		TEST CONDITIONS		TYP	UNIT
C_{pd}	Power dissipation capacitance	C_L = 50 pF, f = 10 MHz	V_{CC} = 3.3 V	111	pF
			V_{CC} = 5 V	114	

6.15 Typical Characteristics

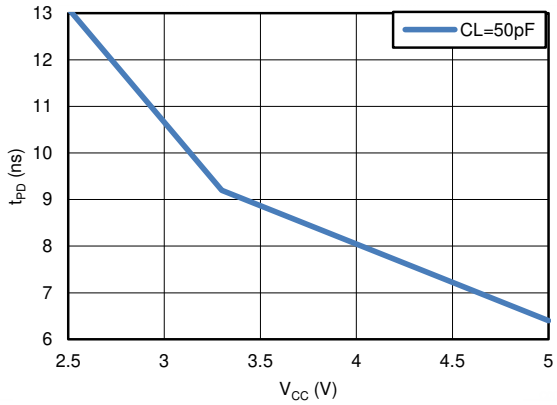

Figure 6-2. TPD vs V_{CC}

Copyright © 2023 Texas Instruments Incorporated

7 Parameter Measurement Information

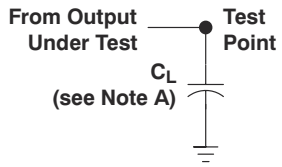

LOAD CIRCUIT FOR
TOTEM-POLE OUTPUTS

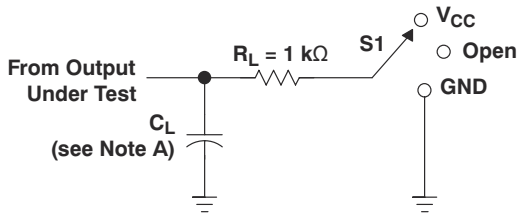

LOAD CIRCUIT FOR
3-STATE AND OPEN-DRAIN OUTPUTS

TEST	S1
t_{PLH}/t_{PHL}	Open
t_{PLZ}/t_{PZL}	V_{CC}
t_{PHZ}/t_{PZH}	GND
Open Drain	V_{CC}

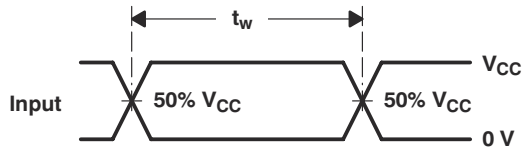

VOLTAGE WAVEFORMS
PULSE DURATION

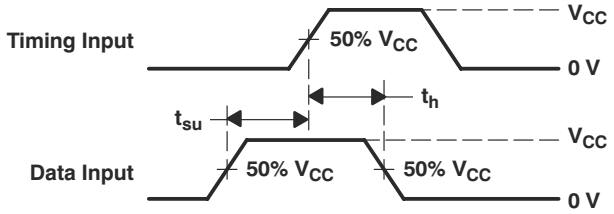

VOLTAGE WAVEFORMS
SETUP AND HOLD TIMES

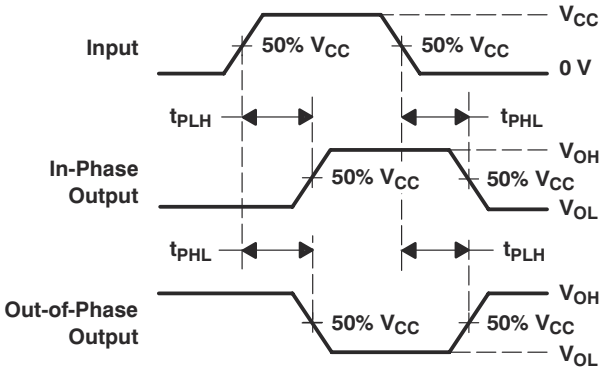

VOLTAGE WAVEFORMS
PROPAGATION DELAY TIMES
INVERTING AND NONINVERTING OUTPUTS

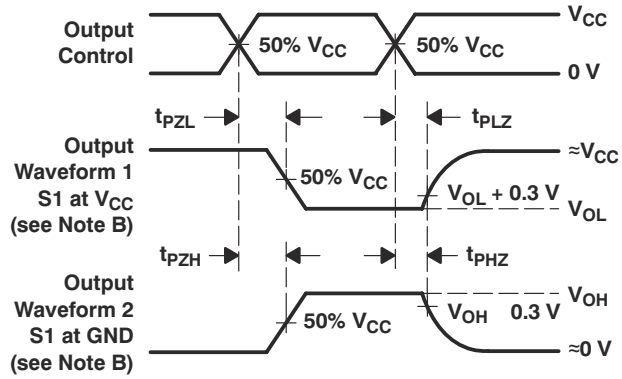

VOLTAGE WAVEFORMS
ENABLE AND DISABLE TIMES
LOW- AND HIGH-LEVEL ENABLING

NOTES:
A. C_L includes probe and jig capacitance.
B. Waveform 1 is for an output with internal conditions such that the output is low, except when disabled by the output control. Waveform 2 is for an output with internal conditions such that the output is high, except when disabled by the output control.
C. All input pulses are supplied by generators having the following characteristics: PRR ≤ 1 MHz, Z_O = 50 Ω, t_r ≤ 3 ns, t_f ≤ 3 ns.
D. The outputs are measured one at a time, with one input transition per measurement.
E. t_{PLZ} and t_{PHZ} are the same as t_{dis}.
F. t_{PZL} and t_{PZH} are the same as t_{en}.
G. t_{PHL} and t_{PLH} are the same as t_{pd}.
H. All parameters and waveforms are not applicable to all devices.

Figure 7-1. Load Circuit and Voltage Waveforms

Copyright © 2023 Texas Instruments Incorporated

8 Detailed Description

8.1 Overview

The SN74LV595A-Q1 contains an 8-bit serial-in, parallel-out shift register that feeds an 8-bit D-type storage register. The storage register has parallel 3-state outputs. Separate clocks are provided for both the shift and storage register. The shift register has a direct overriding clear ($\overline{SRCLR}$) input, serial (SER) input, and a serial output for cascading. When the output-enable ($\overline{OE}$) input is high, all outputs except $Q_{H'}$ are in the high-impedance state.

Both the shift register clock (SRCLK) and storage register clock (RCLK) are positive-edge triggered. If both clocks are connected together, the shift register always is one clock pulse ahead of the storage register.

To ensure the high-impedance state during power up or power down, $\overline{OE}$ should be tied to V_{CC} through a pullup resistor; the minimum value of the resistor is determined by the current-sinking capability of the driver.

The device is fully specified for partial-power-down applications using I_{off}. The I_{off} circuitry disables the outputs, preventing damaging current backflow through the device when it is powered down.

8.2 Functional Block Diagram

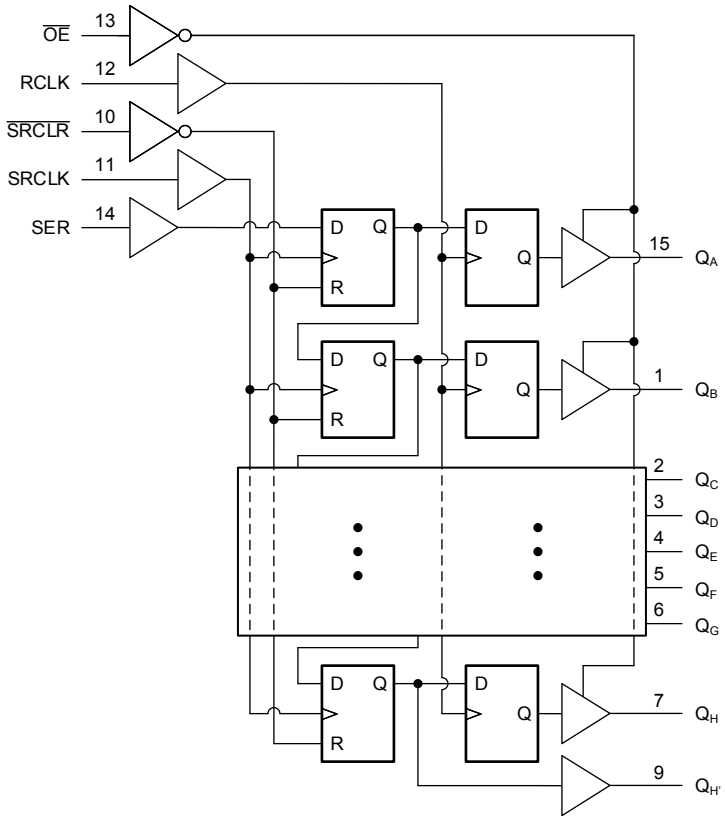

Figure 8-1. Logic Diagram (Positive Logic)

Copyright © 2023 Texas Instruments Incorporated

8.3 Feature Description

8.3.1 Balanced CMOS 3-State Outputs

This device includes balanced CMOS 3-state outputs. Driving high, driving low, and high impedance are the three states that these outputs can be in. The term *balanced* indicates that the device can sink and source similar currents. The drive capability of this device may create fast edges into light loads, so routing and load conditions should be considered to prevent ringing. Additionally, the outputs of this device can drive larger currents than the device can sustain without being damaged. It is important for the output power of the device to be limited to avoid damage due to overcurrent. The electrical and thermal limits defined in the *Absolute Maximum Ratings* must be followed at all times.

When placed into the high-impedance mode, the output will neither source nor sink current, with the exception of minor leakage current as defined in the *Electrical Characteristics* table. In the high-impedance state, the output voltage is not controlled by the device and is dependent on external factors. If no other drivers are connected to the node, then this is known as a floating node and the voltage is unknown. A pull-up or pull-down resistor can be connected to the output to provide a known voltage at the output while it is in the high-impedance state. The value of the resistor will depend on multiple factors, including parasitic capacitance and power consumption limitations. Typically, a 10-kΩ resistor can be used to meet these requirements.

Unused 3-state CMOS outputs should be left disconnected.

8.3.2 Latching Logic

This device includes latching logic circuitry. Latching circuits commonly include D-type latches and D-type flip-flops, but include all logic circuits that act as volatile memory.

When the device is powered on, the state of each latch is unknown. There is no default state for each latch at start-up.

The output state of each latching logic circuit only remains stable as long as power is applied to the device within the supply voltage range specified in the *Recommended Operating Conditions* table.

8.3.3 Partial Power Down (I_{off})

This device includes circuitry to disable all outputs when the supply pin is held at 0 V. When disabled, the outputs will neither source nor sink current, regardless of the input voltages applied. The amount of leakage current at each output is defined by the I_{off} specification in the *Electrical Characteristics* table.

Copyright © 2023 Texas Instruments Incorporated

8.3.4 Wettable Flanks

This device includes wettable flanks for at least one package. See the *Features* section on the front page of the data sheet for which packages include this feature.

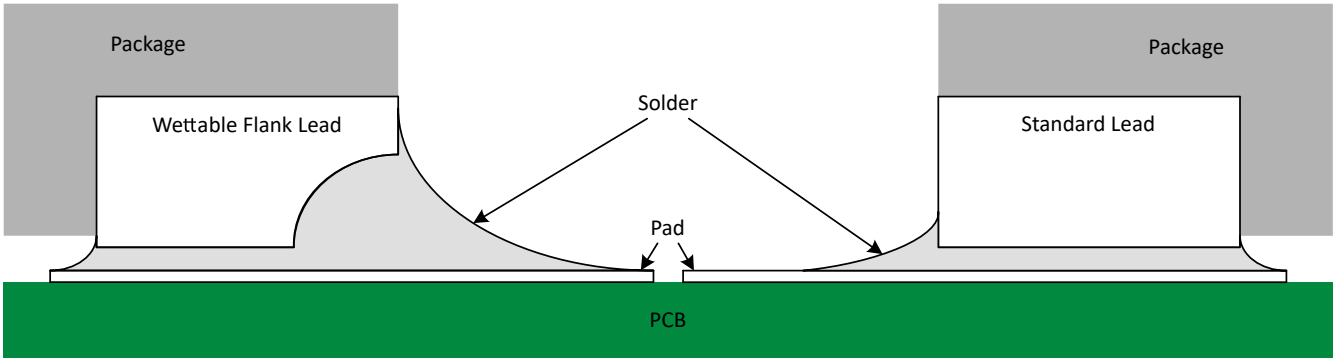

Figure 8-2. Simplified Cutaway View of Wettable-Flank QFN Package and Standard QFN Package After Soldering

Wettable flanks help improve side wetting after soldering, which makes QFN packages easier to inspect with automatic optical inspection (AOI). As shown in Figure 8-2, a wettable flank can be dimpled or step-cut to provide additional surface area for solder adhesion which assists in reliably creating a side fillet. Please see the mechanical drawing for additional details.

8.3.5 Clamp Diode Structure

Figure 8-3 shows the inputs and outputs to this device have negative clamping diodes only.

CAUTION

Voltages beyond the values specified in the *Absolute Maximum Ratings* table can cause damage to the device. The input and output voltage ratings may be exceeded if the input and output clamp-current ratings are observed.

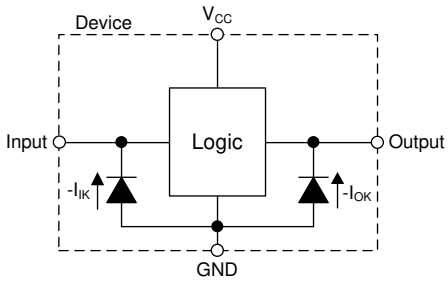

Figure 8-3. Electrical Placement of Clamping Diodes for Each Input and Output

Copyright © 2023 Texas Instruments Incorporated

8.4 Device Functional Modes

Table 8-1. Function Table

INPUTS[1]					FUNCTION
SER	SRCLK	$\overline{SRCLR}$	RCLK	$\overline{OE}$	
X	X	X	X	H	Outputs Q_A–Q_H are disabled. $Q_{H'}$ remains enabled.
X	X	X	X	L	Outputs Q_A–Q_H are enabled.
X	X	L	X	X	Shift register is cleared.
L	↑	H	X	X	First stage of the shift register goes low. Other stages store the data of previous stage, respectively.
H	↑	H	X	X	First stage of the shift register goes high. Other stages store the data of previous stage, respectively.
X	X	X	↑	X	Shift-register data is stored in the storage register.

(1) H = High Voltage Level, L = Low Voltage Level, X = Do not Care, Z = High Impedance

Copyright © 2023 Texas Instruments Incorporated

9 Application and Implementation

Note

Information in the following applications sections is not part of the TI component specification, and TI does not warrant its accuracy or completeness. TI's customers are responsible for determining suitability of components for their purposes, as well as validating and testing their design implementation to confirm system functionality.

9.1 Application Information

The SN74LV595A-Q1 is a low-drive CMOS device that can be used for a multitude of bus interface type applications where output ringing is a concern. The low drive and slow edge rates will minimize overshoot and undershoot on the outputs. The inputs are 5-V tolerant allowing for down translation to V_{CC}.

9.2 Typical Application

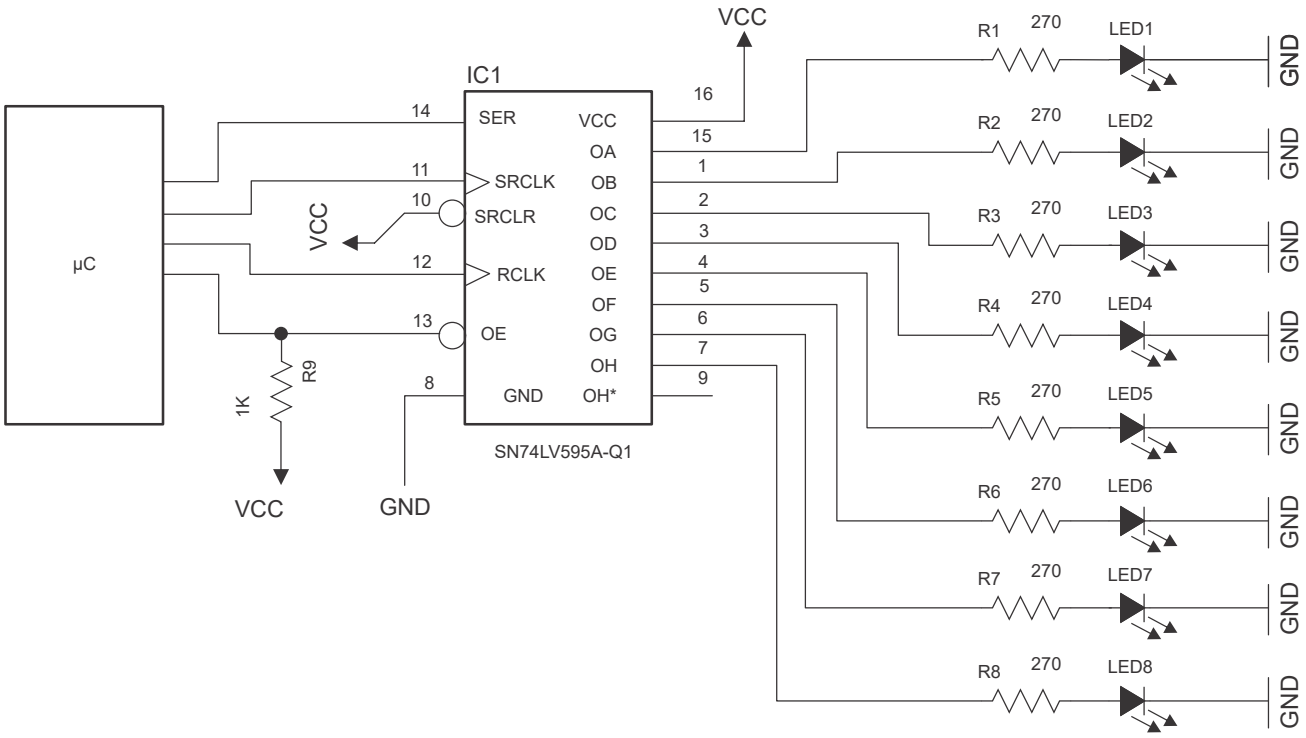

Figure 9-1. SN74LV595A-Q1 Expanding IOs to Drive LEDs

9.2.1 Power Considerations

Ensure the desired supply voltage is within the range specified in the *Recommended Operating Conditions*. The supply voltage sets the device's electrical characteristics as described in the *Electrical Characteristics* section.

The positive voltage supply must be capable of sourcing current equal to the total current to be sourced by all outputs of the SN74LV595A-Q1 plus the maximum static supply current, I_{CC}, listed in the *Electrical Characteristics*, and any transient current required for switching. The logic device can only source as much current that is provided by the positive supply source. Be sure to not exceed the maximum total current through V_{CC} listed in the *Absolute Maximum Ratings*.

Copyright © 2023 Texas Instruments Incorporated

The ground must be capable of sinking current equal to the total current to be sunk by all outputs of the SN74LV595A-Q1 plus the maximum supply current, I_{CC}, listed in the *Electrical Characteristics*, and any transient current required for switching. The logic device can only sink as much current that can be sunk into its ground connection. Be sure to not exceed the maximum total current through GND listed in the *Absolute Maximum Ratings*.

The SN74LV595A-Q1 can drive a load with a total capacitance less than or equal to 50 pF while still meeting all of the data sheet specifications. Larger capacitive loads can be applied; however, it is not recommended to exceed 50 pF.

The SN74LV595A-Q1 can drive a load with total resistance described by $R_L \geq V_O / I_O$, with the output voltage and current defined in the *Electrical Characteristics* table with V_{OH} and V_{OL}. When outputting in the HIGH state, the output voltage in the equation is defined as the difference between the measured output voltage and the supply voltage at the V_{CC} pin.

Total power consumption can be calculated using the information provided in *CMOS Power Consumption and Cpd Calculation*.

Thermal increase can be calculated using the information provided in *Thermal Characteristics of Standard Linear and Logic (SLL) Packages and Devices*.

CAUTION

The maximum junction temperature, $T_{J(max)}$ listed in the *Absolute Maximum Ratings*, is an additional limitation to prevent damage to the device. Do not violate any values listed in the *Absolute Maximum Ratings*. These limits are provided to prevent damage to the device.

9.2.2 Input Considerations

Input signals must cross $V_{IL(max)}$ to be considered a logic LOW, and $V_{IH(min)}$ to be considered a logic HIGH. Do not exceed the maximum input voltage range found in the *Absolute Maximum Ratings*.

Unused inputs must be terminated to either V_{CC} or ground. The unused inputs can be directly terminated if the input is completely unused, or they can be connected with a pull-up or pull-down resistor if the input will be used sometimes, but not always. A pull-up resistor is used for a default state of HIGH, and a pull-down resistor is used for a default state of LOW. The drive current of the controller, leakage current into the SN74LV595A-Q1 (as specified in the *Electrical Characteristics*), and the desired input transition rate limits the resistor size. A 10-kΩ resistor value is often used due to these factors.

The SN74LV595A-Q1 has CMOS inputs and thus requires fast input transitions to operate correctly, as defined in the *Recommended Operating Conditions* table. Slow input transitions can cause oscillations, additional power consumption, and reduction in device reliability.

Refer to the *Feature Description* section for additional information regarding the inputs for this device.

9.2.3 Output Considerations

The positive supply voltage is used to produce the output HIGH voltage. Drawing current from the output will decrease the output voltage as specified by the V_{OH} specification in the *Electrical Characteristics*. The ground voltage is used to produce the output LOW voltage. Sinking current into the output will increase the output voltage as specified by the V_{OL} specification in the *Electrical Characteristics*.

Push-pull outputs that could be in opposite states, even for a very short time period, should never be connected directly together. This can cause excessive current and damage to the device.

Two channels within the same device with the same input signals can be connected in parallel for additional output drive strength.

Unused outputs can be left floating. Do not connect outputs directly to V_{CC} or ground.

Refer to the *Feature Description* section for additional information regarding the outputs for this device.

Copyright © 2023 Texas Instruments Incorporated

9.2.4 Detailed Design Procedure

1. Add a decoupling capacitor from V_{CC} to GND. The capacitor needs to be placed physically close to the device and electrically close to both the V_{CC} and GND pins. An example layout is shown in the *Layout* section.
2. Ensure the capacitive load at the output is ≤ 50 pF. This is not a hard limit; it will, however, ensure optimal performance. This can be accomplished by providing short, appropriately sized traces from the SN74LV595A-Q1 to one or more of the receiving devices.
3. Ensure the resistive load at the output is larger than (V_{CC} / $I_{O(max)}$) Ω. This will ensure that the maximum output current from the *Absolute Maximum Ratings* is not violated. Most CMOS inputs have a resistive load measured in MΩ; much larger than the minimum calculated previously.
4. Thermal issues are rarely a concern for logic gates; the power consumption and thermal increase, however, can be calculated using the steps provided in the application report, *CMOS Power Consumption and Cpd Calculation*.

9.2.5 Application Curves

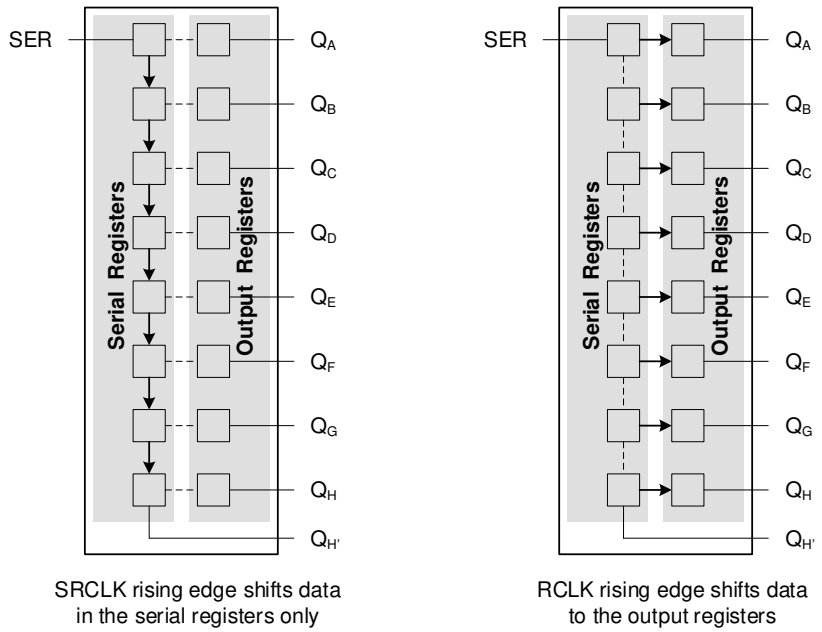

Figure 9-2. Simplified Functional Diagram Showing Clock Operation

Copyright © 2023 Texas Instruments Incorporated

9.3 Power Supply Recommendations

The power supply can be any voltage between the MIN and MAX supply voltage rating located in the *Recommended Operating Conditions* table.

Each V_{CC} terminal should have a good bypass capacitor to prevent power disturbance. For devices with a single supply, a 0.1 µF capacitor is recommended. If there are multiple V_{CC} terminals then 0.01 µF or 0.022 µF capacitors are recommended for each power terminal. It is ok to parallel multiple bypass capacitors to reject different frequencies of noise. 0.1 µF and 1.0 µF capacitors are commonly used in parallel. The bypass capacitor should be installed as close to the power terminal as possible for the best results.

9.4 Layout

9.4.1 Layout Guidelines

When using multiple bit logic devices, inputs should not float. In many cases, functions or parts of functions of digital logic devices are unused. Some examples are when only two inputs of a triple-input AND gate are used, or when only 3 of the 4-buffer gates are used. Such input pins should not be left unconnected because the undefined voltages at the outside connections result in undefined operational states.

Specified in Figure 9-3 are rules that must be observed under all circumstances. All unused inputs of digital logic devices must be connected to a high or low bias to prevent them from floating. The logic level that should be applied to any particular unused input depends on the function of the device. Generally they will be tied to GND or V_{CC}, whichever makes more sense or is more convenient. It is acceptable to float outputs unless the part is a transceiver. If the transceiver has an output enable pin, it will disable the outputs section of the part when asserted. This will not disable the input section of the I/Os so they also cannot float when disabled.

9.4.2 Layout Example

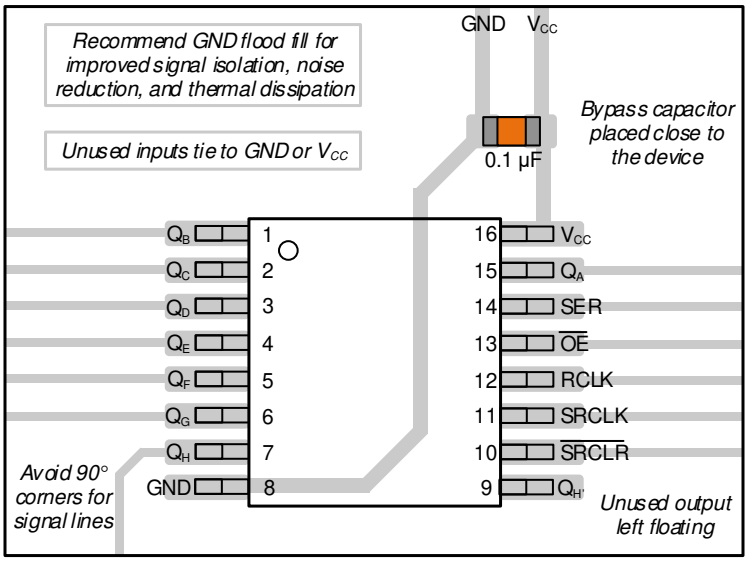

Figure 9-3. Layout Example for the SN74LV595A-Q1

10 Device and Documentation Support

10.1 Documentation Support

10.1.1 Related Documentation

For related documentation, see the following:

- Texas Instruments, *CMOS Power Consumption and Cpd Calculation* application report
- Texas Instruments, *Thermal Characteristics of Standard Linear and Logic (SLL) Packages and Devices* appliation report

10.2 Receiving Notification of Documentation Updates

To receive notification of documentation updates, navigate to the device product folder on ti.com. Click on *Subscribe to updates* to register and receive a weekly digest of any product information that has changed. For change details, review the revision history included in any revised document.

10.3 Support Resources

TI E2E™ support forums are an engineer's go-to source for fast, verified answers and design help — straight from the experts. Search existing answers or ask your own question to get the quick design help you need.

Linked content is provided "AS IS" by the respective contributors. They do not constitute TI specifications and do not necessarily reflect TI's views; see TI's Terms of Use.

10.4 Trademarks

TI E2E™ is a trademark of Texas Instruments.
All trademarks are the property of their respective owners.

10.5 Electrostatic Discharge Caution

This integrated circuit can be damaged by ESD. Texas Instruments recommends that all integrated circuits be handled with appropriate precautions. Failure to observe proper handling and installation procedures can cause damage.

ESD damage can range from subtle performance degradation to complete device failure. Precision integrated circuits may be more susceptible to damage because very small parametric changes could cause the device not to meet its published specifications.

10.6 Glossary

TI Glossary	This glossary lists and explains terms, acronyms, and definitions.

11 Mechanical, Packaging, and Orderable Information

The following pages include mechanical, packaging, and orderable information. This information is the most current data available for the designated devices. This data is subject to change without notice and revision of this document. For browser-based versions of this data sheet, refer to the left-hand navigation.

Copyright © 2023 Texas Instruments Incorporated

PACKAGING INFORMATION

Orderable part number	Status (1)	Material type (2)	Package | Pins	Package qty | Carrier	RoHS (3)	Lead finish/ Ball material (4)	MSL rating/ Peak reflow (5)	Op temp (°C)	Part marking (6)
SN74LV595AIPWRG4Q1	Active	Production	TSSOP (PW) | 16	2000 | LARGE T&R	Yes	NIPDAU	Level-1-260C-UNLIM	-40 to 85	LV595AI
SN74LV595AIPWRG4Q1.A	Active	Production	TSSOP (PW) | 16	2000 | LARGE T&R	Yes	NIPDAU	Level-1-260C-UNLIM	-40 to 85	LV595AI
SN74LV595AIPWRQ1	Active	Production	TSSOP (PW) | 16	2000 | LARGE T&R	Yes	NIPDAU	Level-3-260C-168 HR	-40 to 85	LV595AI
SN74LV595AIPWRQ1.A	Active	Production	TSSOP (PW) | 16	2000 | LARGE T&R	Yes	NIPDAU	Level-3-260C-168 HR	-40 to 85	LV595AI
SN74LV595AQPWRQ1	Active	Production	TSSOP (PW) | 16	2000 | LARGE T&R	Yes	NIPDAU	Level-1-260C-UNLIM	-40 to 125	LV595AQ
SN74LV595AQPWRQ1.A	Active	Production	TSSOP (PW) | 16	2000 | LARGE T&R	Yes	NIPDAU	Level-1-260C-UNLIM	-40 to 125	LV595AQ
SN74LV595AQWBQBRQ1	Active	Production	WQFN (BQB) | 16	3000 | LARGE T&R	Yes	NIPDAU	Level-1-260C-UNLIM	-40 to 125	LV595Q
SN74LV595AQWBQBRQ1.A	Active	Production	WQFN (BQB) | 16	3000 | LARGE T&R	Yes	NIPDAU	Level-1-260C-UNLIM	-40 to 125	LV595Q

(1) **Status:** For more details on status, see our product life cycle.

(2) **Material type:** When designated, preproduction parts are prototypes/experimental devices, and are not yet approved or released for full production. Testing and final process, including without limitation quality assurance, reliability performance testing, and/or process qualification, may not yet be complete, and this item is subject to further changes or possible discontinuation. If available for ordering, purchases will be subject to an additional waiver at checkout, and are intended for early internal evaluation purposes only. These items are sold without warranties of any kind.

(3) **RoHS values:** Yes, No, RoHS Exempt. See the TI RoHS Statement for additional information and value definition.

(4) **Lead finish/Ball material:** Parts may have multiple material finish options. Finish options are separated by a vertical ruled line. Lead finish/Ball material values may wrap to two lines if the finish value exceeds the maximum column width.

(5) **MSL rating/Peak reflow:** The moisture sensitivity level ratings and peak solder (reflow) temperatures. In the event that a part has multiple moisture sensitivity ratings, only the lowest level per JEDEC standards is shown. Refer to the shipping label for the actual reflow temperature that will be used to mount the part to the printed circuit board.

(6) **Part marking:** There may be an additional marking, which relates to the logo, the lot trace code information, or the environmental category of the part.

Multiple part markings will be inside parentheses. Only one part marking contained in parentheses and separated by a "~" will appear on a part. If a line is indented then it is a continuation of the previous line and the two combined represent the entire part marking for that device.

Important Information and Disclaimer: The information provided on this page represents TI's knowledge and belief as of the date that it is provided. TI bases its knowledge and belief on information provided by third parties, and makes no representation or warranty as to the accuracy of such information. Efforts are underway to better integrate information from third parties. TI has taken and continues to take reasonable steps to provide representative and accurate information but may not have conducted destructive testing or chemical analysis on incoming materials and chemicals. TI and TI suppliers consider certain information to be proprietary, and thus CAS numbers and other limited information may not be available for release.

In no event shall TI's liability arising out of such information exceed the total purchase price of the TI part(s) at issue in this document sold by TI to Customer on an annual basis.

OTHER QUALIFIED VERSIONS OF SN74LV595A-Q1 :

- Catalog : SN74LV595A
- Enhanced Product : SN74LV595A-EP

NOTE: Qualified Version Definitions:

- Catalog - TI's standard catalog product
- Enhanced Product - Supports Defense, Aerospace and Medical Applications

TAPE AND REEL INFORMATION

REEL DIMENSIONS

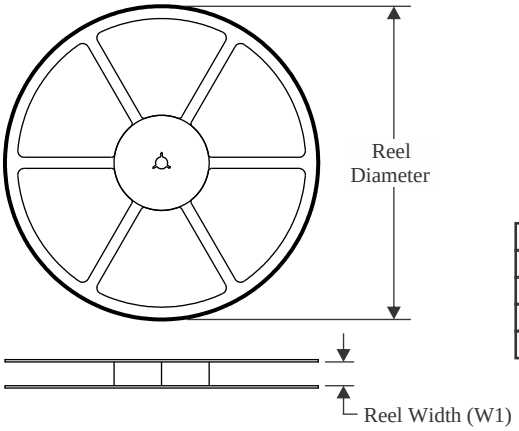

TAPE DIMENSIONS

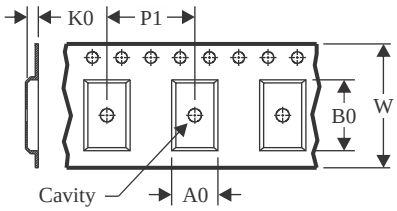

A0	Dimension designed to accommodate the component width
B0	Dimension designed to accommodate the component length
K0	Dimension designed to accommodate the component thickness
W	Overall width of the carrier tape
P1	Pitch between successive cavity centers

QUADRANT ASSIGNMENTS FOR PIN 1 ORIENTATION IN TAPE

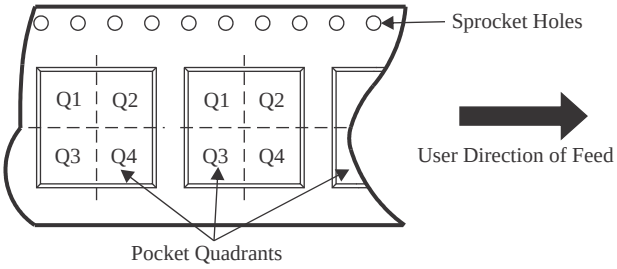

*All dimensions are nominal

Device	Package Type	Package Drawing	Pins	SPQ	Reel Diameter (mm)	Reel Width W1 (mm)	A0 (mm)	B0 (mm)	K0 (mm)	P1 (mm)	W (mm)	Pin1 Quadrant
SN74LV595AIPWRG4Q1	TSSOP	PW	16	2000	330.0	12.4	6.9	5.6	1.6	8.0	12.0	Q1
SN74LV595AIPWRQ1	TSSOP	PW	16	2000	330.0	12.4	6.9	5.6	1.6	8.0	12.0	Q1
SN74LV595AQPWRQ1	TSSOP	PW	16	2000	330.0	12.4	6.9	5.6	1.6	8.0	12.0	Q1
SN74LV595AQPWRQ1	TSSOP	PW	16	2000	330.0	12.4	6.9	5.6	1.6	8.0	12.0	Q1
SN74LV595AQWBQBRQ1	WQFN	BQB	16	3000	180.0	12.4	2.8	3.8	1.2	4.0	12.0	Q1

TAPE AND REEL BOX DIMENSIONS

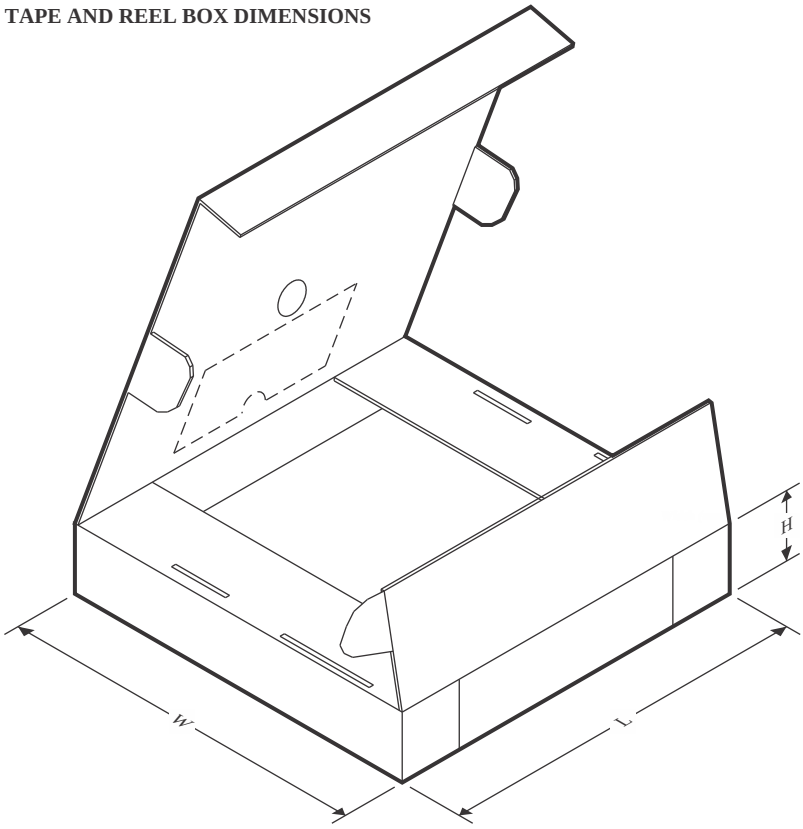

*All dimensions are nominal

Device	Package Type	Package Drawing	Pins	SPQ	Length (mm)	Width (mm)	Height (mm)
SN74LV595AIPWRG4Q1	TSSOP	PW	16	2000	356.0	356.0	35.0
SN74LV595AIPWRQ1	TSSOP	PW	16	2000	356.0	356.0	35.0
SN74LV595AQPWRQ1	TSSOP	PW	16	2000	356.0	356.0	35.0
SN74LV595AQPWRQ1	TSSOP	PW	16	2000	353.0	353.0	32.0
SN74LV595AQWBQBRQ1	WQFN	BQB	16	3000	210.0	185.0	35.0

GENERIC PACKAGE VIEW

BQB 16

WQFN - 0.8 mm max height

2.5 x 3.5, 0.5 mm pitch

PLASTIC QUAD FLATPACK - NO LEAD

This image is a representation of the package family, actual package may vary.
Refer to the product data sheet for package details.

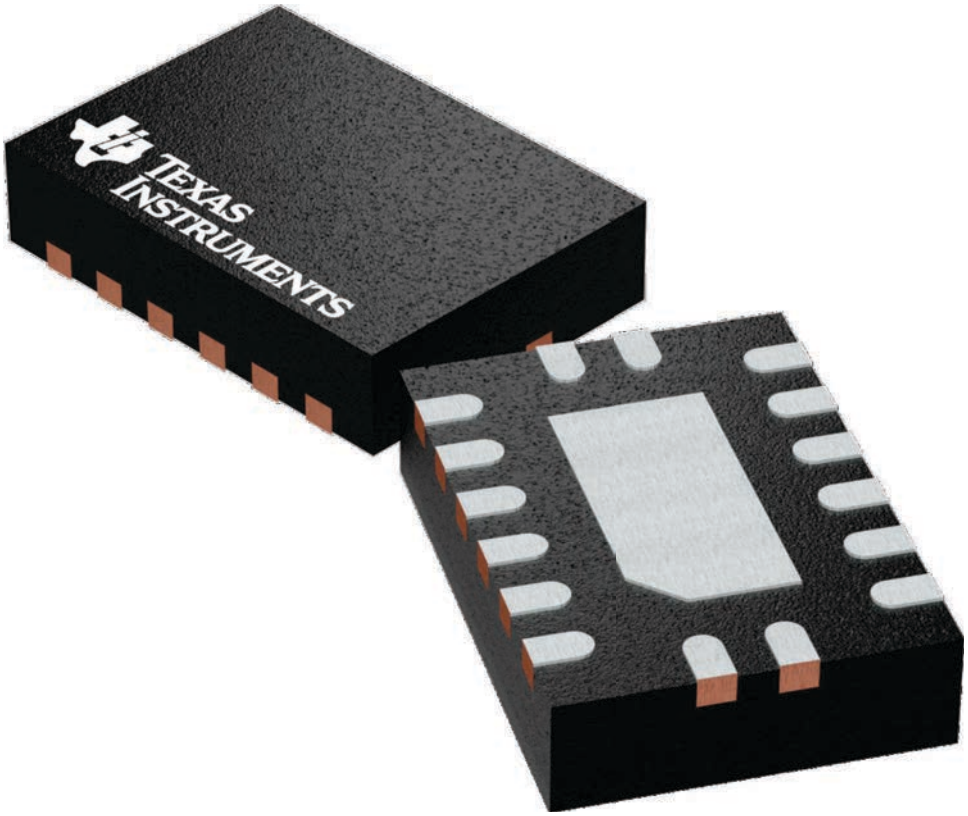

4226161/A

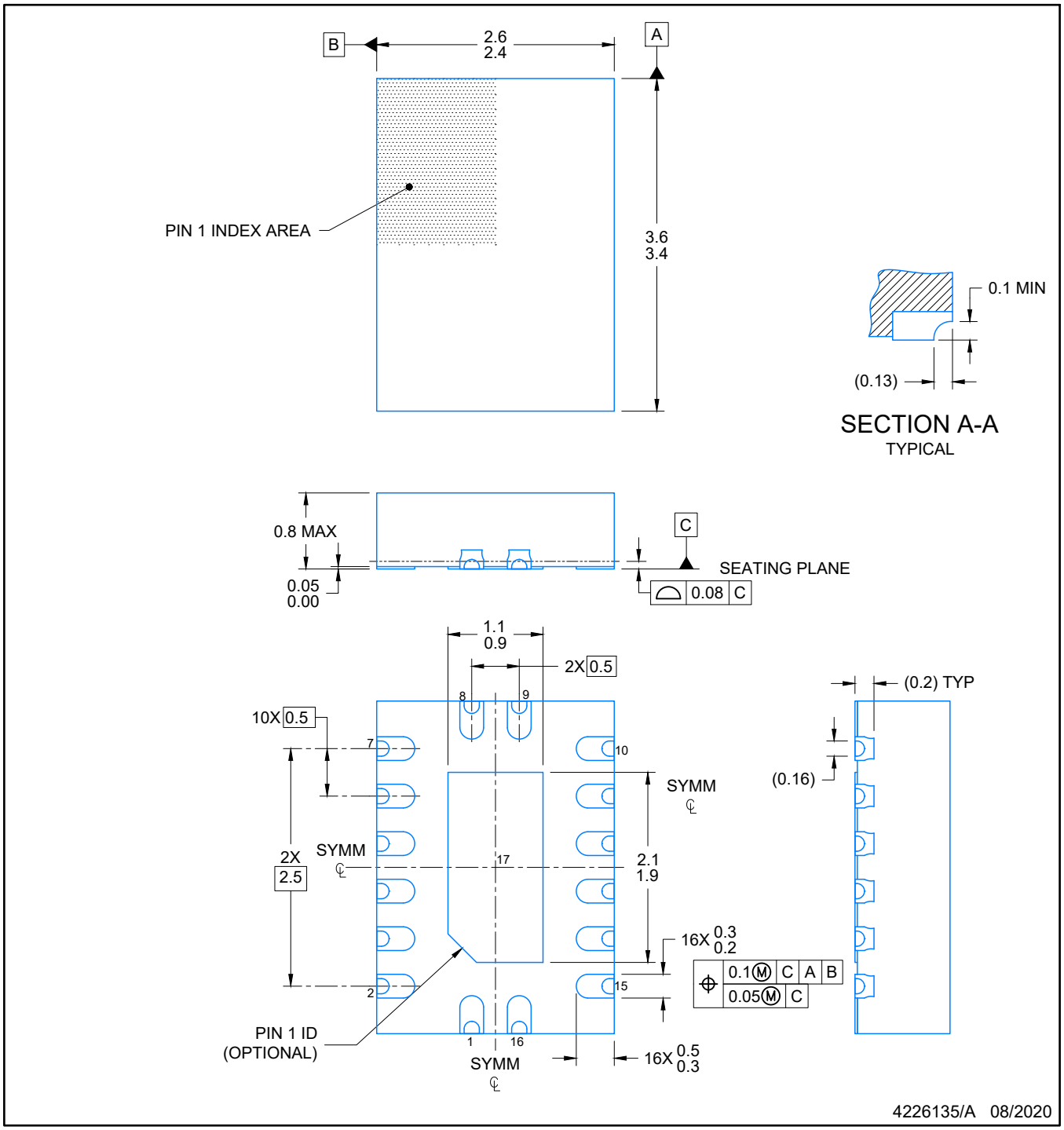

NOTES:

1. All linear dimensions are in millimeters. Any dimensions in parenthesis are for reference only. Dimensioning and tolerancing per ASME Y14.5M.
2. This drawing is subject to change without notice.
3. The package thermal pad must be soldered to the printed circuit board for optimal thermal and mechanical performance.

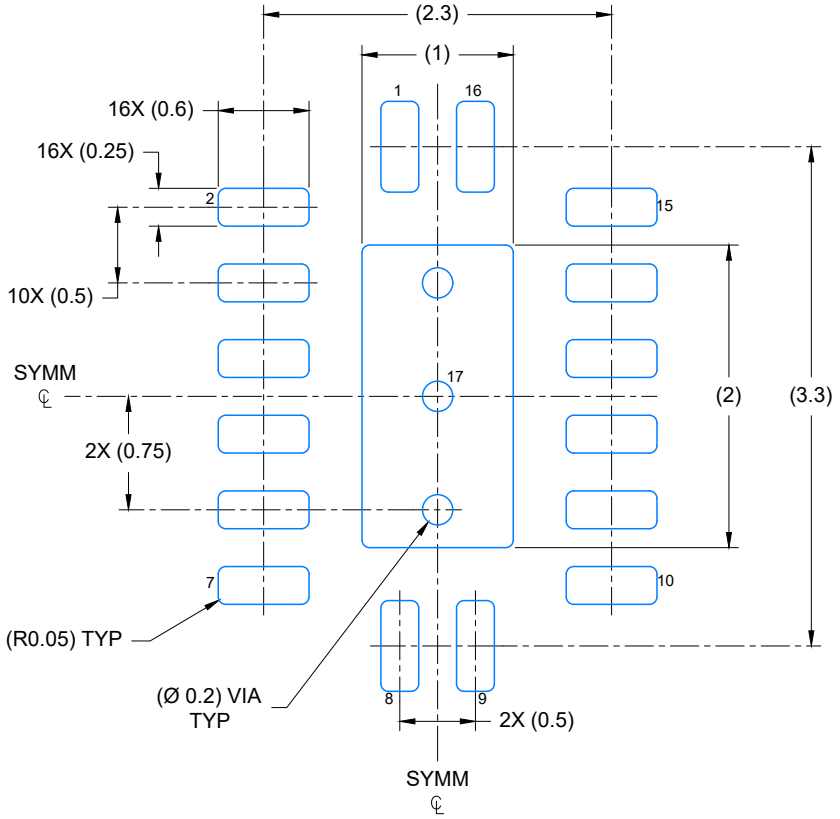

LAND PATTERN EXAMPLE
EXPOSED METAL SHOWN
SCALE: 20X

4226135/A 08/2020

NOTES: (continued)

4. This package is designed to be soldered to a thermal pad on the board. For more information, see Texas Instruments literature number SLUA271 (www.ti.com/lit/slua271).
5. Vias are optional depending on application, refer to device data sheet. If any vias are implemented, refer to their locations shown on this view. It is recommended that vias under paste be filled, plugged or tented.

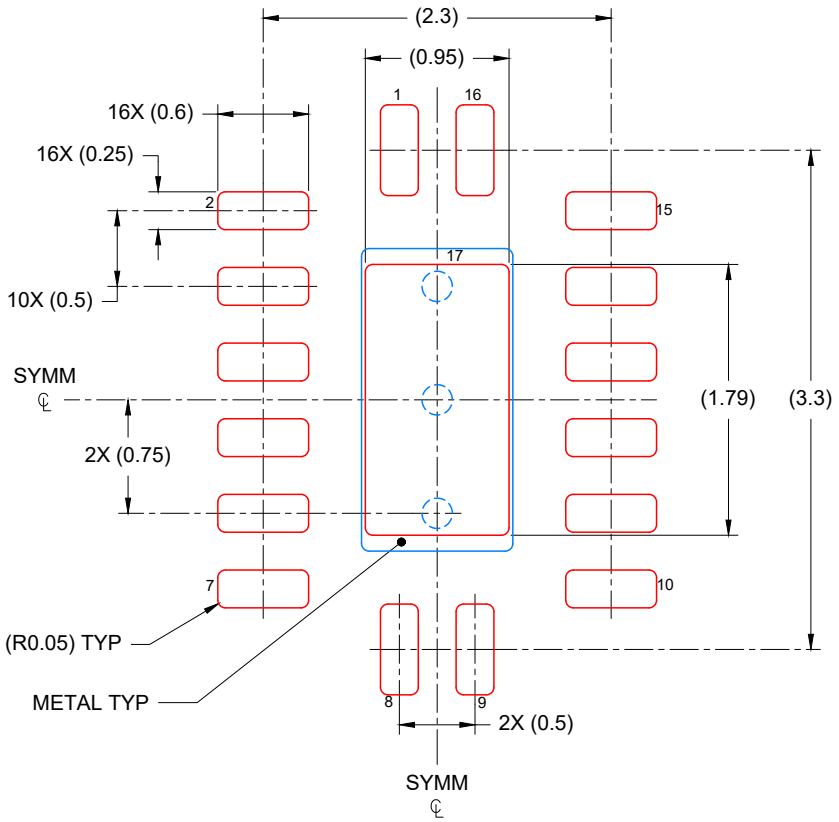

SOLDER PASTE EXAMPLE
BASED ON 0.125 mm THICK STENCIL

EXPOSED PAD
85% PRINTED COVERAGE BY AREA
SCALE: 20X

4226135/A 08/2020

NOTES: (continued)

6. Laser cutting apertures with trapezoidal walls and rounded corners may offer better paste release. IPC-7525 may have alternate design recommendations.

PW0016A

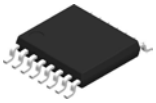

PACKAGE OUTLINE

TSSOP - 1.2 mm max height

SMALL OUTLINE PACKAGE

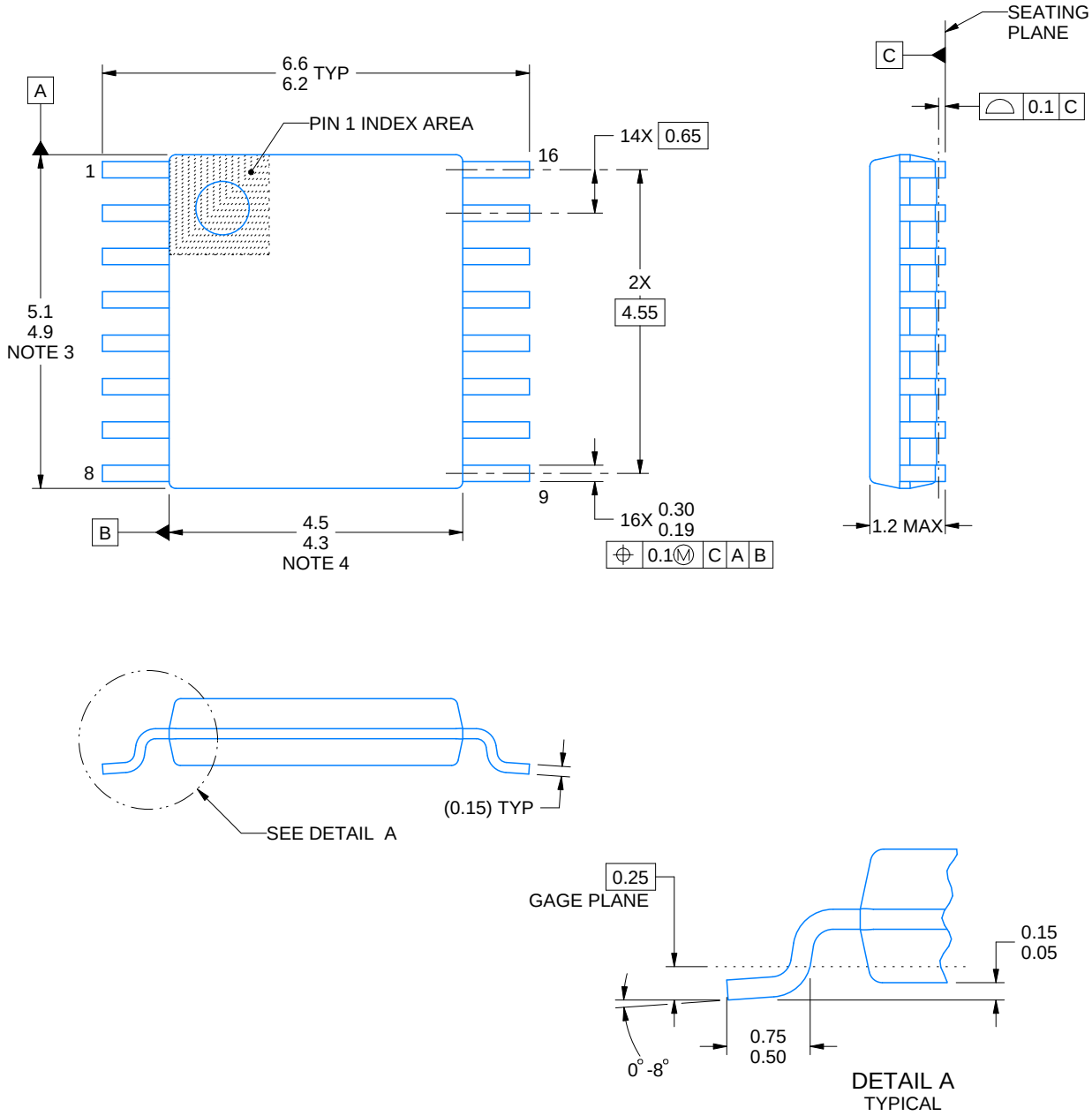

NOTES:

1. All linear dimensions are in millimeters. Any dimensions in parenthesis are for reference only. Dimensioning and tolerancing per ASME Y14.5M.
2. This drawing is subject to change without notice.
3. This dimension does not include mold flash, protrusions, or gate burrs. Mold flash, protrusions, or gate burrs shall not exceed 0.15 mm per side.
4. This dimension does not include interlead flash. Interlead flash shall not exceed 0.25 mm per side.
5. Reference JEDEC registration MO-153.

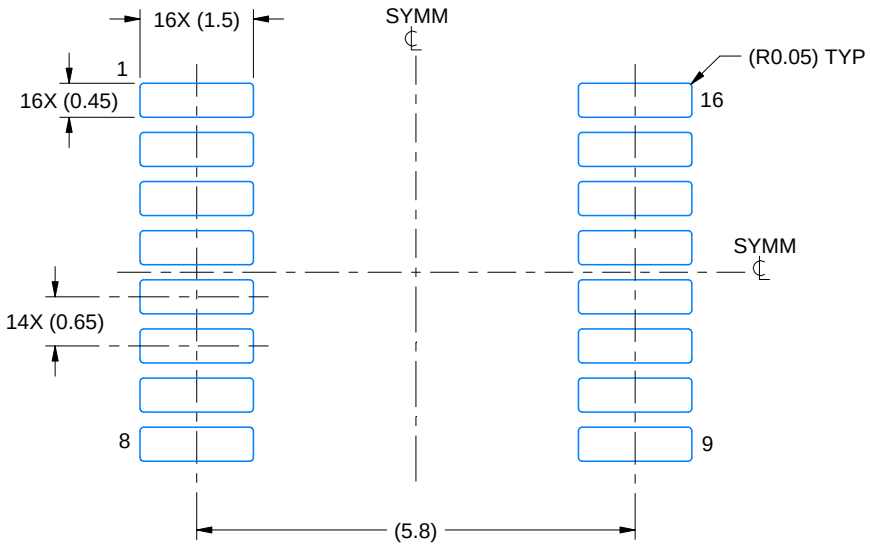

LAND PATTERN EXAMPLE
EXPOSED METAL SHOWN
SCALE: 10X

NON-SOLDER MASK DEFINED (PREFERRED)

SOLDER MASK DEFINED

SOLDER MASK DETAILS

4220204/A 02/2017

NOTES: (continued)

6. Publication IPC-7351 may have alternate designs.
7. Solder mask tolerances between and around signal pads can vary based on board fabrication site.

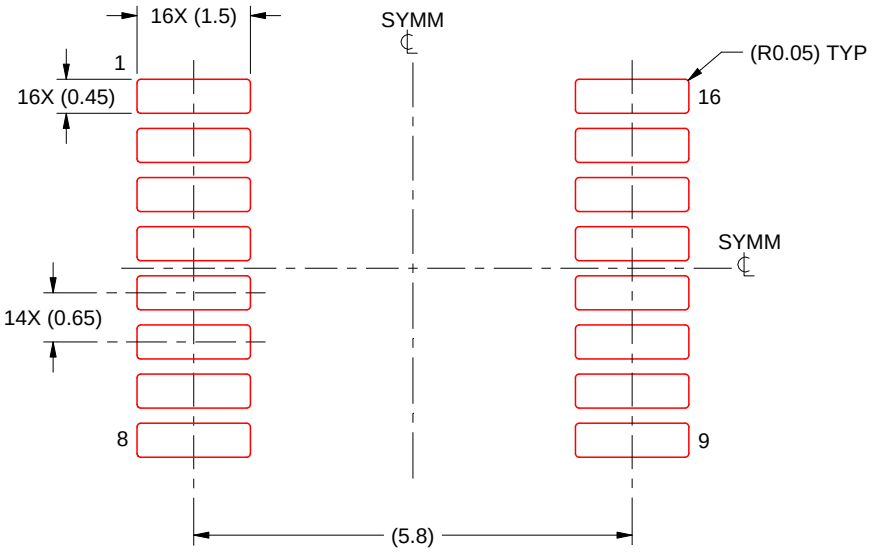

SOLDER PASTE EXAMPLE
BASED ON 0.125 mm THICK STENCIL
SCALE: 10X

4220204/A 02/2017

NOTES: (continued)

8. Laser cutting apertures with trapezoidal walls and rounded corners may offer better paste release. IPC-7525 may have alternate design recommendations.
9. Board assembly site may have different recommendations for stencil design.

IMPORTANT NOTICE AND DISCLAIMER

TI PROVIDES TECHNICAL AND RELIABILITY DATA (INCLUDING DATA SHEETS), DESIGN RESOURCES (INCLUDING REFERENCE DESIGNS), APPLICATION OR OTHER DESIGN ADVICE, WEB TOOLS, SAFETY INFORMATION, AND OTHER RESOURCES “AS IS” AND WITH ALL FAULTS, AND DISCLAIMS ALL WARRANTIES, EXPRESS AND IMPLIED, INCLUDING WITHOUT LIMITATION ANY IMPLIED WARRANTIES OF MERCHANTABILITY, FITNESS FOR A PARTICULAR PURPOSE OR NON-INFRINGEMENT OF THIRD PARTY INTELLECTUAL PROPERTY RIGHTS.

These resources are intended for skilled developers designing with TI products. You are solely responsible for (1) selecting the appropriate TI products for your application, (2) designing, validating and testing your application, and (3) ensuring your application meets applicable standards, and any other safety, security, regulatory or other requirements.

These resources are subject to change without notice. TI grants you permission to use these resources only for development of an application that uses the TI products described in the resource. Other reproduction and display of these resources is prohibited. No license is granted to any other TI intellectual property right or to any third party intellectual property right. TI disclaims responsibility for, and you will fully indemnify TI and its representatives against, any claims, damages, costs, losses, and liabilities arising out of your use of these resources.

TI’s products are provided subject to TI’s Terms of Sale or other applicable terms available either on ti.com or provided in conjunction with such TI products. TI’s provision of these resources does not expand or otherwise alter TI’s applicable warranties or warranty disclaimers for TI products.

TI objects to and rejects any additional or different terms you may have proposed.

Mailing Address: Texas Instruments, Post Office Box 655303, Dallas, Texas 75265
Copyright © 2025, Texas Instruments Incorporated