1 TMS320DM6435 Digital Media Processor

1.1 Features

- **High-Performance Digital Media Processor (DM6435)**
  - **2.5-, 2.-, 1.67-,1.51-, 1.43-ns ns Instruction Cycle Time**
  - **400-, 500-, 600-, 660-, 700-MHz C64x+™ Clock Rate**
  - **Eight 32-Bit C64x+ Instructions/Cycle**
  - **3200, 4000, 4800, 5280, 5600 MIPS**
  - **Fully Software-Compatible With C64x**
  - **Commercial and Automotive (Q or S suffix) Grades**
  - **Low Power Device (L suffix)**
- **VelociTI.2™ Extensions to VelociTI™ Advanced Very-Long-Instruction-Word (VLIW) TMS320C64x+™ DSP Core**
  - **Eight Highly Independent Functional Units With VelociTI.2 Extensions:**
    - **Six ALUs (32-/40-Bit), Each Supports Single 32-Bit, Dual 16-Bit, or Quad 8-Bit Arithmetic per Clock Cycle**
    - **Two Multipliers Support Four 16 x 16-Bit Multiplies (32-Bit Results) per Clock Cycle or Eight 8 x 8-Bit Multiplies (16-Bit Results) per Clock Cycle**
  - **Load-Store Architecture With Non-Aligned Support**
  - **64 32-Bit General-Purpose Registers**
  - **Instruction Packing Reduces Code Size**
  - **All Instructions Conditional**
  - **Additional C64x+™ Enhancements**
    - **Protected Mode Operation**
    - **Exceptions Support for Error Detection and Program Redirection**
    - **Hardware Support for Modulo Loop Auto-Focus Module Operation**
- **C64x+ Instruction Set Features**
  - **Byte-Addressable (8-/16-/32-/64-Bit Data)**
  - **8-Bit Overflow Protection**
  - **Bit-Field Extract, Set, Clear**
  - **Normalization, Saturation, Bit-Counting**
  - **VelociTI.2 Increased Orthogonality**
  - **C64x+ Extensions**
    - **Compact 16-bit Instructions**
    - **Additional Instructions to Support Complex Multiplies**
- **C64x+ L1/L2 Memory Architecture**
  - **256K-Bit (32K-Byte) L1P Program RAM/Cache [Flexible Allocation]**
  - **640K-Bit (80K-Byte) L1D Data RAM/Cache [Flexible Allocation]**
  - **1M-Bit (128K-Byte) L2 Unified Mapped RAM/Cache [Flexible Allocation]**
- **Supports Little Endian Mode Only**
- **Video Processing Subsystem (VPSS), VPFE Only**
  - **Front End Provides:**
    - **CCD and CMOS Imager Interface**
    - **BT.601/BT.656 Digital YCbCr 4:2:2 (8-/16-Bit) Interface**
    - **Preview Engine for Real-Time Image Processing**
    - **Glueless Interface to Common Video Decoders**
    - **Histogram Module**
    - **Auto-Exposure, Auto-White Balance and Auto-Focus Module**
    - **Resize Engine**
      - **Resize Images From 1/4x to 4x**
      - **Separate Horizontal/Vertical Control**
- **External Memory Interfaces (EMIFs)**
  - **32-Bit DDR2 SDRAM Memory Controller With 256M-Byte Address Space (1.8-V I/O)**
    - **Supports up to 333-MHz (data rate) bus and interfaces to DDR2-400 SDRAM**
  - **Asynchronous 8-Bit Wide EMIF (EMIFA) With up to 64M-Byte Address Reach**
    - **Flash Memory Interfaces**
      - **NOR (8-Bit-Wide Data)**
      - **NAND (8-Bit-Wide Data)**
- **Enhanced Direct-Memory-Access (EDMA) Controller (64 Independent Channels)**
- **Two 64-Bit General-Purpose Timers (Each Configurable as Two 32-Bit Timers)**
- **One 64-Bit Watch Dog Timer**
- **Two UARTs (One with RTS and CTS Flow Control)**
- **Master/Slave Inter-Integrated Circuit (I^2C Bus™)**
- **Multichannel Buffered Serial Port (McBSP)**
  - **I2S and TDM**
  - **AC97 Audio Codec Interface**

Please be aware that an important notice concerning availability, standard warranty, and use in critical applications of Texas Instruments semiconductor products and disclaimers thereto appears at the end of this document.

All trademarks are the property of their respective owners.

PRODUCTION DATA information is current as of publication date. Products conform to specifications per the terms of the Texas Instruments standard warranty. Production processing does not necessarily include testing of all parameters.

Copyright © 2006–2008, Texas Instruments Incorporated

- **SPI**
- **Standard Voice Codec Interface (AIC12)**
- **Telecom Interfaces – ST-Bus, H-100**
- **128 Channel Mode**

- **Multichannel Audio Serial Port (McASP0)**
  - **Four Serializers and SPDIF (DIT) Mode**
- **16-Bit Host-Port Interface (HPI)**
- **High-End CAN Controller (HECC)**
- **10/100 Mb/s Ethernet MAC (EMAC)**
  - **IEEE 802.3 Compliant**
  - **Supports Media Independent Interface (MII)**
  - **Management Data I/O (MDIO) Module**
- **VLYNQ™ Interface (FPGA Interface)**
- **Three Pulse Width Modulator (PWM) Outputs**
- **On-Chip ROM Bootloader**
- **Individual Power-Savings Modes**
- **Flexible PLL Clock Generators**
- **IEEE-1149.1 (JTAG™) Boundary-Scan-Compatible**
- **Up to 111 General-Purpose I/O (GPIO) Pins (Multiplexed With Other Device Functions)**
- **Packages:**
  - **361-Pin Pb-Free PBGA Package (ZWT Suffix), 0.8-mm Ball Pitch**
  - **376-Pin Plastic BGA Package (ZDU Suffix), 1.0-mm Ball Pitch**
- **0.09-μm/6-Level Cu Metal Process (CMOS)**
- **3.3-V and 1.8-V I/O, 1.2-V Internal (-7/-6/-5/-4/-L/-Q6/-Q5/-Q4)**
- **3.3-V and 1.8-V I/O, 1.05-V Internal (-7/-6/-5/-4/-L/-Q5)**
- **Applications:**
  - **Digital Media**
  - **Networked Media Encode**
  - **Video Imaging**

1.2 Description

The TMS320C64x+™ DSPs (including the TMS320DM6435 device) are the highest-performance fixed-point DSP generation in the TMS320C6000™ DSP platform. The DM6435 device is based on the third-generation high-performance, advanced VelociTI™ very-long-instruction-word (VLIW) architecture developed by Texas Instruments (TI), making these DSPs an excellent choice for digital media applications. The C64x+™ devices are upward code-compatible from previous devices that are part of the C6000™ DSP platform. The C64x™ DSPs support added functionality and have an expanded instruction set from previous devices.

Any reference to the C64x DSP or C64x CPU also applies, unless otherwise noted, to the C64x+ DSP and C64x+ CPU, respectively.

With performance of up to 5600 million instructions per second (MIPS) at a clock rate of 700 MHz, the C64x+ core offers solutions to high-performance DSP programming challenges. The DSP core possesses the operational flexibility of high-speed controllers and the numerical capability of array processors. The C64x+ DSP core processor has 64 general-purpose registers of 32-bit word length and eight highly independent functional units—two multipliers for a 32-bit result and six arithmetic logic units (ALUs). The eight functional units include instructions to accelerate the performance in video and imaging applications. The DSP core can produce four 16-bit multiply-accumulates (MACs) per cycle for a total of 2800 million MACs per second (MMACS), or eight 8-bit MACs per cycle for a total of 5600 MMACS. For more details on the C64x+ DSP, see the *TMS320C64x/C64x+ DSP CPU and Instruction Set Reference Guide* (literature number SPRU732).

The DM6435 also has application-specific hardware logic, on-chip memory, and additional on-chip peripherals similar to the other C6000 DSP platform devices. The DM6435 core uses a two-level cache-based architecture. The Level 1 program memory/cache (L1P) consists of a 256K-bit memory space that can be configured as mapped memory or direct mapped cache, and the Level 1 data (L1D) consists of a 640K-bit memory space —384K-bit of which is mapped memory and 256K-bit of which can be configured as mapped memory or 2-way set-associative cache. The Level 2 memory/cache (L2) consists of a 1M-bit memory space that is shared between program and data space. L2 memory can be configured as mapped memory, cache, or combinations of the two.

The peripheral set includes: a configurable video port (VPFE); a 10/100 Mb/s Ethernet MAC (EMAC) with a management data input/output (MDIO) module; a 4-bit transmit, 4-bit receive VLYNQ interface; an inter-integrated circuit (I2C) Bus interface; a multichannel buffered serial port (McBSP); a multichannel audio serial port (McASP0) with 4 serializers; 2 64-bit general-purpose timers each configurable as 2 independent 32-bit timers; 1 64-bit watchdog timer; a user-configurable 16-bit host-port interface (HPI); up to 111-pins of general-purpose input/output (GPIO) with programmable interrupt/event generation modes, multiplexed with other peripherals; 2 UARTs with hardware handshaking support on 1 UART; 3 pulse width modulator (PWM) peripherals; 1 high-end controller area network (CAN) controller [HECC]; and 2 glueless external memory interfaces: an asynchronous external memory interface (EMIFA) for slower memories/peripherals, and a higher speed synchronous memory interface for DDR2.

The DM6435 device includes a Video Processing Subsystem (VPSS) with a configurable video/imaging front-end input peripheral used for video capture.

The Video Processing Front-End (VPFE) is comprised of a CCD Controller (CCDC), a Preview Engine (Previewer), Histogram Module, Auto-Exposure/White Balance/Focus Module (H3A), and Resizer. The CCDC is capable of interfacing to common video decoders, CMOS sensors, and Charge Coupled Devices (CCDs). The Previewer is a real-time image processing engine that takes raw imager data from a CMOS sensor or CCD and converts from an RGB Bayer Pattern to YUV422. The Histogram and H3A modules provide statistical information on the raw color data for use by the DM6435. The Resizer accepts image data for separate horizontal and vertical resizing from 1/4x to 4x in increments of 256/N, where N is between 64 and 1024.

The Ethernet Media Access Controller (EMAC) provides an efficient interface between the DM6435 and the network. The DM6435 EMAC support both 10Base-T and 100Base-TX, or 10 Mbits/second (Mbps) and 100 Mbps in either half- or full-duplex mode, with hardware flow control and quality of service (QOS) support.

The Management Data Input/Output (MDIO) module continuously polls all 32 MDIO addresses in order to enumerate all PHY devices in the system.

The I2C and VLYNQ ports allow DM6435 to easily control peripheral devices and/or communicate with host processors.

The high-end controller area network (CAN) controller [HECC] module provides a network protocol in a harsh environment to communicate serially with other controllers, typically in automotive applications.

The rich peripheral set provides the ability to control external peripheral devices and communicate with external processors. For details on each of the peripherals, see the related sections later in this document and the associated peripheral reference guides.

The DM6435 has a complete set of development tools. These include C compilers, a DSP assembly optimizer to simplify programming and scheduling, and a Windows™ debugger interface for visibility into source code execution.

1.3 Functional Block Diagram

Figure 1-1 shows the functional block diagram of the DM6435 device.

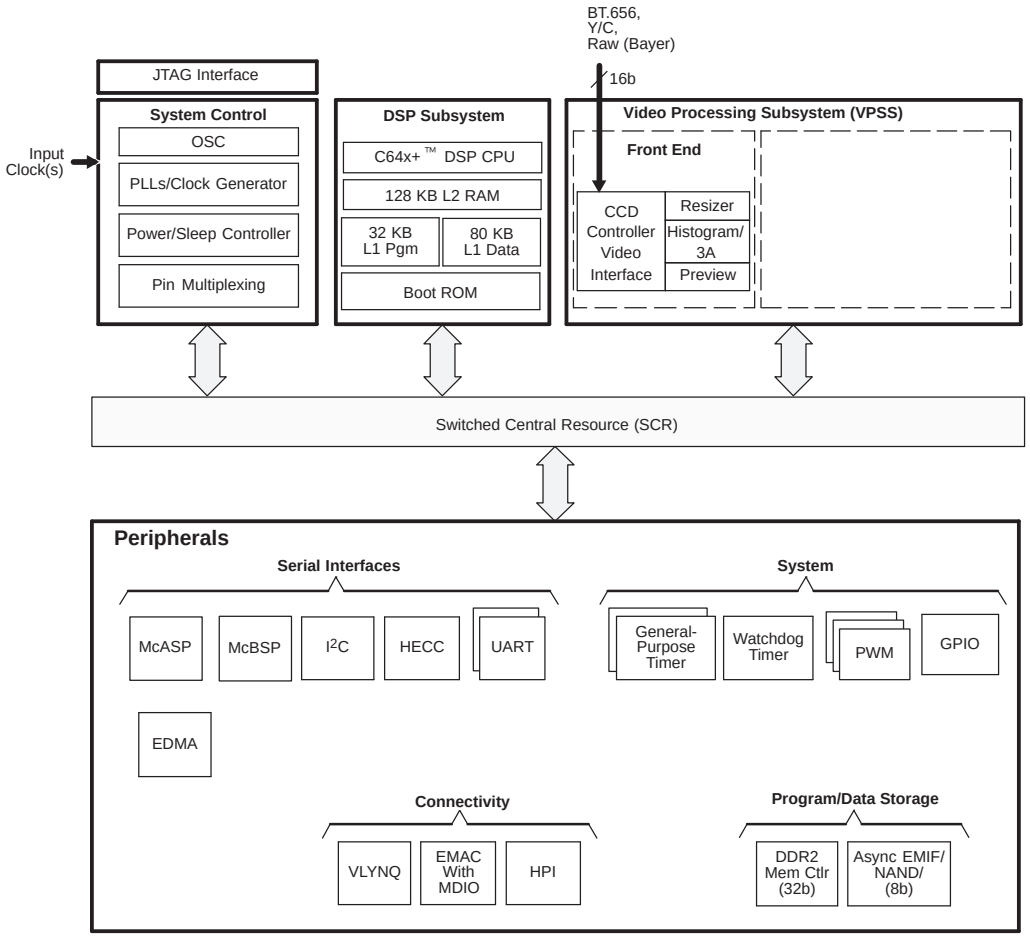

Figure 1-1. TMS320DM6435 Functional Block Diagram

Contents

1 TMS320DM6435 Digital Media Processor 1
1.1 Features 1
1.2 Description 2
1.3 Functional Block Diagram 4
Revision History 6
2 Device Overview 7
2.1 Device Characteristics 7
2.2 CPU (DSP Core) Description 8
2.3 C64x+ CPU 11
2.4 Memory Map Summary 12
2.5 Pin Assignments 16
2.6 Terminal Functions 24
2.7 Device Support 58
2.8 Device and Development-Support Tool Nomenclature 58
2.9 Documentation Support 60
3 Device Configuration 61
3.1 System Module Registers 61
3.2 Power Considerations 62
3.3 Clock Considerations 64
3.4 Boot Sequence 67
3.5 Configurations At Reset 78
3.6 Configurations After Reset 80
3.7 Multiplexed Pin Configurations 84
3.8 Device Initialization Sequence After Reset 119
3.9 Debugging Considerations 121
4 System Interconnect 123
4.1 System Interconnect Block Diagram 123
5 Device Operating Conditions 125
5.1 Absolute Maximum Ratings Over Operating Temperature Range (Unless Otherwise Noted) 125
5.2 Recommended Operating Conditions 126
5.3 Electrical Characteristics Over Recommended Ranges of Supply Voltage and Operating Temperature (Unless Otherwise Noted) 127
6 Peripheral Information and Electrical Specifications 129
6.1 Parameter Information 129
6.2 Recommended Clock and Control Signal Transition Behavior 130
6.3 Power Supplies 130
6.4 Enhanced Direct Memory Access (EDMA3) Controller 137
6.5 Reset 149
6.6 External Clock Input From MXI/CLKIN Pin 158
6.7 Clock PLLs 160
6.8 Interrupts 165
6.9 External Memory Interface (EMIF) 168
6.10 Video Processing Sub-System (VPSS) Overview 176
6.11 Universal Asynchronous Receiver/Transmitter (UART) 187
6.12 Inter-Integrated Circuit (I2C) 190
6.13 Host-Port Interface (HPI) Peripheral 194
6.14 Multichannel Buffered Serial Port (McBSP) 199
6.15 Multichannel Audio Serial Port (McASP0) Peripheral 208
6.16 High-End Controller Area Network Controller (HECC) 216
6.17 Ethernet Media Access Controller (EMAC) 222
6.18 Management Data Input/Output (MDIO) 229
6.19 Timers 230
6.20 Pulse Width Modulator (PWM) 233
6.21 VLYNQ 235
6.22 General-Purpose Input/Output (GPIO) 239
6.23 IEEE 1149.1 JTAG 243
7 Mechanical Data 245
7.1 Thermal Data for ZWT 245
7.1.1 Thermal Data for ZDU 246
7.1.2 Packaging Information 246

Revision History

NOTE: Page numbers for previous revisions may differ from page numbers in the current version.

This data manual revision history highlights the technical changes made to the SPRS344B device-specific data manual to make it an SPRS344C revision.

This data manual revision history highlights the technical changes made to the SPRS344B device-specific data manual to make it an SPRS344C revision.

Scope: Applicable updates to the TMS320DM643x DMP, specifically relating to the TMS320DM6435 device, have been incorporated.

- Added 660- and 700-MHz C64x+™ device speeds.
- Added designators for low-power (-L) devices.

SEE	ADDITIONS/MODIFICATIONS/DELETIONS
Global	• Updated/Changed signal name ***from*** "$\overline{\text{C\_WE}}$" ***to*** "C_WE" • Updated/Changed signal name ***from*** "C_WEN" ***to*** "C_WE"
Section 1.1	Added "5280, 5600 MIPS" ***to*** "High-Performance Digital Signal Processor (DM6435)" bullet
Section 1.2	• In first paragraph, updated/changed the following: – First sentence ***from*** "With performance up to 4800 million instructions per second (MIPS) at a clock rate of 600 MHz..." ***to*** "With performance up to 5600 million instructions per second (MIPS) with a clock rate of 700 MHz..." – Fifth sentence ***from*** "The DSP core can produce...for a total of 2400 million MACs per second...or a total of 4800 MMACS."***to*** "The DSP core can produce...for a total of 2800 million MACs per second...or a total of 5600 MMACS."
Section 2.6	Table 2-19, *Multichannel Audio Serial Port (McASP0) Terminal Functions*: • Updated/Changed AFSR0/DR0/GP[100] pin description ***from*** "... frame synchronization AFSX0..." ***to*** "...frame synchronization AFSR0..." • Updated/Changed AFSX0/DX1/GP[107] pin description from "...frame synchronization AFSR0..." ***to*** "...frame synchronization AFSX0..."
Section 2.8	Updated/Changed Figure 2-10, *Device Nomenclature,* to reflect new device speeds and low-power designator (-L suffix).
Section 5	Added footnote ***to*** Section 5.1, *Absolute Maximum Ratings Over Operating Temperature Range (Unless Otherwise Noted).*
Section 5	Updated/Changed I_{CDD} and I_{DDD} test conditions and footnote in Section 5.3, *Electrical Characteristics Over Recommended Ranges of Supply Voltage and Operating Temperature (Unless Otherwise Noted).*
Section 5.2	Deleted "Future variants..." footnote from table
Section 6.7.1	Table 6-15, *PLLC1 Clock Frequency Ranges*: • Updated/Changed PLLOUT 1.2V-CV_{DD} max value ***from*** "700 MHz" ***to*** "600 MHz" for -6/-5/-4/-L/-Q6/-Q5/-Q4 devices. • Updated/Changed SYSCLK1 1.05V-CV_{DD} max value ***from*** "560 MHz" ***to*** "520 MHz" for -7 devices.
Section 6.7.1	Updated/Changed sentence ***from*** "TI requires EMI filter manufacturer Murata..." ***to*** "TI recommends EMI filter manufacturer Murata..."
Section 6.7.4	Deleted "(-4, -4Q, -4S, -5, -5Q, -5S, -6)" from Table 6-19 title, *Timing Requirements for MXI/CLKIN.*

2 Device Overview

2.1 Device Characteristics

Table 2-1, provides an overview of the TMS320DM6435 DSP. The tables show significant features of the DM6435 device, including the capacity of on-chip RAM, the peripherals, the CPU frequency, and the package type with pin count.

Table 2-1. Characteristics of the DM6435 Processor

HARDWARE FEATURES		DM6435
Peripherals Not all peripherals pins are available at the same time (For more detail, see the Device Configuration section).	DDR2 Memory Controller	(16-/32-bit bus width) [1.8 V I/O]
	Asynchronous EMIF [EMIFA]	Asynchronous (8-bit bus width), RAM, Flash, (8-bit NOR ***or*** 8-bit NAND)
	EDMA3	1 (64 independent channels, 8 QDMA channels)
	Timers	2 64-bit General Purpose (configurable as 2 64-bit ***or*** 4 32-bit) 1 64-bit Watch Dog
	UARTs	2 (one with RTS and CTS flow control)
	I2C	1 (Master/Slave)
	McBSP	1
	McASP	1 (4 serailizers)
	10/100 Ethernet MAC (EMAC) with Management Data Input/Output (MDIO)	1
	VLYNQ	1
	General-Purpose Input/Output Port (GPIO)	Up to 111 pins
	PWM	3 outputs
	HPI (16-bit)	1
	Configurable Video Port	1 Input (VPFE)
	HECC	1
On-Chip Memory	Size (Bytes)	240KB RAM, 64KB ROM
	Organization	32K-Byte (32KB) L1 Program (L1P) RAM/Cache (Cache up to 32KB) 80KB L1 Data (L1D) RAM/Cache (Cache up to 32KB) 128KB Unified Mapped RAM/Cache (L2) 64KB Boot ROM
MegaModule Rev ID	Revision ID Register (MM_REVID.[15:0]) (address location: 0x0181 2000)	See the *TMS320DM6437/35/33/31 Digital Media Processor (DMP) [Silicon Revisions 1.1 and 1.0] Silicon Errata* (literature number SPRZ250).
CPU ID + CPU Rev ID	Control Status Register (CSR.[31:16])	
JTAG BSDL_ID	JTAGID register (address location: 0x01C4 0028)	See Section 6.23.1, *JTAG ID (JTAGID) Register Description(s)*
CPU Frequency (1) (2)	MHz	700 (-7) 660 (-Q6) 600 (-6/-L) 500 (-5/-Q5) 400 (-4/-Q4)
Cycle Time (1) (2)	ns	2.5 ns (-4/-Q4) 2 ns (-5/-Q5) 1.67 ns (-6/-L) 1.51 ns (-Q6) 1.43 ns (-7)

(1) Performance numbers assume core voltage is set to 1.2V.
(2) Applies to "tape and reel" part number counterparts as well. For more information, see Section 2.8, *Device and Development-Support Tool Nomenclature*.

Table 2-1. Characteristics of the DM6435 Processor (continued)

HARDWARE FEATURES		DM6435
Voltage[(2)]	Core (V)	1.2 V (-7/ -6/-5/ -4/-L/-Q6/-Q5/-Q4)
		1.05 V (-7/-6/-5/-4/-L/-Q5)
	I/O (V)	1.8 V, 3.3 V
PLL Options	MXI/CLKIN frequency multiplier (27 MHz reference)	x1 (Bypass), x14 to x 30
BGA Package(s)	16 x 16 mm, 0.8 mm pitch	361-Pin BGA (ZWT)
	23 x 23 mm, 1.0 mm pitch	376-Pin BGA (ZDU)
Process Technology	µm	0.09 µm
Product Status[(3)]	Product Preview (PP), Advance Information (AI), or Production Data (PD)	PD

(3) PRODUCTION DATA information is current as of publication date. Products conform to specifications per the terms of Texas Instruments standard warranty. Production processing does not necessarily include testing of all parameters.

2.2 CPU (DSP Core) Description

The C64x+ Central Processing Unit (CPU) consists of eight functional units, two register files, and two data paths as shown in Figure 2-1. The two general-purpose register files (A and B) each contain 32 32-bit registers for a total of 64 registers. The general-purpose registers can be used for data or can be data address pointers. The data types supported include packed 8-bit data, packed 16-bit data, 32-bit data, 40-bit data, and 64-bit data. Values larger than 32 bits, such as 40-bit-long or 64-bit-long values are stored in register pairs, with the 32 LSBs of data placed in an even register and the remaining 8 or 32 MSBs in the next upper register (which is always an odd-numbered register).

The eight functional units (.M1, .L1, .D1, .S1, .M2, .L2, .D2, and .S2) are each capable of executing one instruction every clock cycle. The .M functional units perform all multiply operations. The .S and .L units perform a general set of arithmetic, logical, and branch functions. The .D units primarily load data from memory to the register file and store results from the register file into memory.

The C64x+ CPU extends the performance of the C64x core through enhancements and new features.

Each C64x+ .M unit can perform one of the following each clock cycle: one 32 x 32 bit multiply, one 16 x 32 bit multiply, two 16 x 16 bit multiplies, two 16 x 32 bit multiplies, two 16 x 16 bit multiplies with add/subtract capabilities, four 8 x 8 bit multiplies, four 8 x 8 bit multiplies with add operations, and four 16 x 16 multiplies with add/subtract capabilities (including a complex multiply). There is also support for Galois field multiplication for 8-bit and 32-bit data. Many communications algorithms such as FFTs and modems require complex multiplication. The complex multiply (CMPY) instruction takes for 16-bit inputs and produces a 32-bit real and a 32-bit imaginary output. There are also complex multiplies with rounding capability that produces one 32-bit packed output that contain 16-bit real and 16-bit imaginary values. The 32 x 32 bit multiply instructions provide the extended precision necessary for audio and other high-precision algorithms on a variety of signed and unsigned 32-bit data types.

The .L or (Arithmetic Logic Unit) now incorporates the ability to do parallel add/subtract operations on a pair of common inputs. Versions of this instruction exist to work on 32-bit data or on pairs of 16-bit data performing dual 16-bit add and subtracts in parallel. There are also saturated forms of these instructions.

The C64x+ core enhances the .S unit in several ways. In the C64x core, dual 16-bit MIN2 and MAX2 comparisons were only available on the .L units. On the C64x+ core they are also available on the .S unit which increases the performance of algorithms that do searching and sorting. Finally, to increase data packing and unpacking throughput, the .S unit allows sustained high performance for the quad 8-bit/16-bit and dual 16-bit instructions. Unpack instructions prepare 8-bit data for parallel 16-bit operations. Pack instructions return parallel results to output precision including saturation support.

Other new features include:

- **SPLOOP** - A small instruction buffer in the CPU that aids in creation of software pipelining loops where multiple iterations of a loop are executed in parallel. The SPLOOP buffer reduces the code size associated with software pipelining. Furthermore, loops in the SPLOOP buffer are fully interruptible.
- **Compact Instructions** - The native instruction size for the C6000 devices is 32 bits. Many common instructions such as MPY, AND, OR, ADD, and SUB can be expressed as 16 bits if the C64x+ compiler can restrict the code to use certain registers in the register file. This compression is performed by the code generation tools.
- **Instruction Set Enhancement** - As noted above, there are new instructions such as 32-bit multiplications, complex multiplications, packing, sorting, bit manipulation, and 32-bit Galois field multiplication.
- **Exceptions Handling** - Intended to aid the programmer in isolating bugs. The C64x+ CPU is able to detect and respond to exceptions, both from internally detected sources (such as illegal op-codes) and from system events (such as a watchdog time expiration).
- **Privilege** - Defines user and supervisor modes of operation, allowing the operating system to give a basic level of protection to sensitive resources. Local memory is divided into multiple pages, each with read, write, and execute permissions.
- **Time-Stamp Counter** - Primarily targeted for Real-Time Operating System (RTOS) robustness, a free-running time-stamp counter is implemented in the CPU which is ***not*** sensitive to system stalls.

For more details on the C64x+ CPU and its enhancements over the C64x architecture, see the following documents:

- *TMS320C64x/C64x+ DSP CPU and Instruction Set Reference Guide* (literature number SPRU732)
- *TMS320C64x+ DSP Megamodule Reference Guide* (literature number SPRU871)
- *TMS320C64x to TMS320C64x+ CPU Migration Guide* Application Report (literature number SPRAA84)
- *TMS320C64x+ DSP Cache* User's Guide (literature number SPRU862)

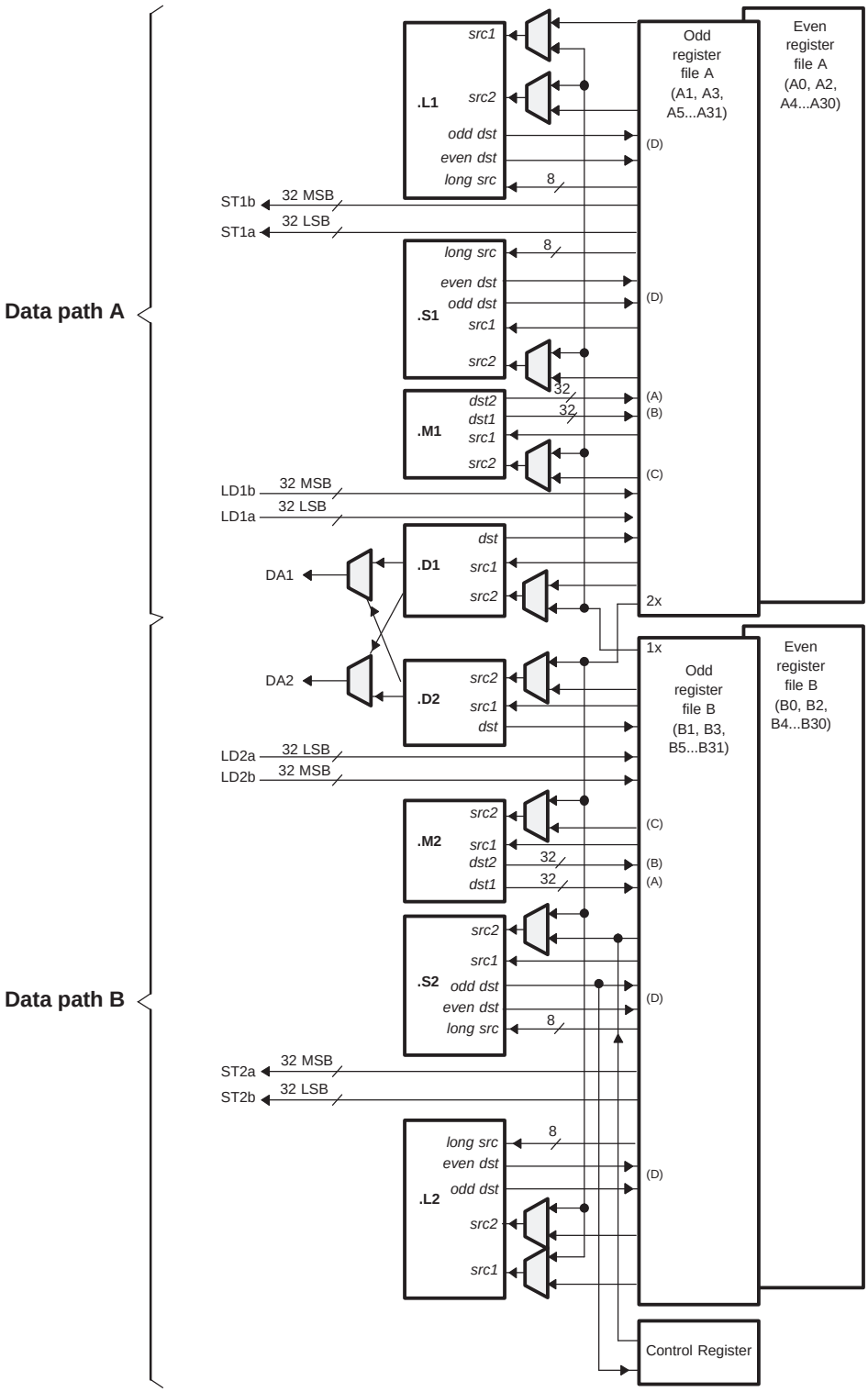

A. On .M unit, *dst2* is 32 MSB.
B. On .M unit, *dst1* is 32 LSB.
C. On C64x CPU .M unit, *src2* is 32 bits; on C64x+ CPU .M unit, *src2* is 64 bits.
D. On .L and .S units, *odd dst* connects to odd register files and *even dst* connects to even register files.

Figure 2-1. TMS320C64x+™ CPU (DSP Core) Data Paths

2.3 C64x+ CPU

The C64x+ core uses a two-level cache-based architecture. The Level 1 Program memory/cache (L1P) consists of 32 KB memory space that can be configured as mapped memory or direct mapped cache. The Level 1 Data memory/cache (L1D) consists of 80 KB—48 KB of which is mapped memory and 32 KB of which can be configured as mapped memory or 2-way set associated cache. The Level 2 memory/cache (L2) consists of a 128 KB memory space that is shared between program and data space. L2 memory can be configured as mapped memory, cache, or a combination of both.

Table 2-2 shows a memory map of the C64x+ CPU cache registers for the device.

Table 2-2. C64x+ Cache Registers

HEX ADDRESS RANGE	REGISTER ACRONYM	DESCRIPTION
0x0184 0000	L2CFG	L2 Cache configuration register
0x0184 0020	L1PCFG	L1P Size Cache configuration register
0x0184 0024	L1PCC	L1P Freeze Mode Cache configuration register
0x0184 0040	L1DCFG	L1D Size Cache configuration register
0x0184 0044	L1DCC	L1D Freeze Mode Cache configuration register
0x0184 0048 - 0x0184 0FFC	-	Reserved
0x0184 1000	EDMAWEIGHT	L2 EDMA access control register
0x0184 1004 - 0x0184 1FFC	-	Reserved
0x0184 2000	L2ALLOC0	L2 allocation register 0
0x0184 2004	L2ALLOC1	L2 allocation register 1
0x0184 2008	L2ALLOC2	L2 allocation register 2
0x0184 200C	L2ALLOC3	L2 allocation register 3
0x0184 2010 - 0x0184 3FFF	-	Reserved
0x0184 4000	L2WBAR	L2 writeback base address register
0x0184 4004	L2WWC	L2 writeback word count register
0x0184 4010	L2WIBAR	L2 writeback invalidate base address register
0x0184 4014	L2WIWC	L2 writeback invalidate word count register
0x0184 4018	L2IBAR	L2 invalidate base address register
0x0184 401C	L2IWC	L2 invalidate word count register
0x0184 4020	L1PIBAR	L1P invalidate base address register
0x0184 4024	L1PIWC	L1P invalidate word count register
0x0184 4030	L1DWIBAR	L1D writeback invalidate base address register
0x0184 4034	L1DWIWC	L1D writeback invalidate word count register
0x0184 4038	-	Reserved
0x0184 4040	L1DWBAR	L1D Block Writeback
0x0184 4044	L1DWWC	L1D Block Writeback
0x0184 4048	L1DIBAR	L1D invalidate base address register
0x0184 404C	L1DIWC	L1D invalidate word count register
0x0184 4050 - 0x0184 4FFF	-	Reserved
0x0184 5000	L2WB	L2 writeback all register
0x0184 5004	L2WBINV	L2 writeback invalidate all register
0x0184 5008	L2INV	L2 Global Invalidate without writeback
0x0184 500C - 0x0184 5027	-	Reserved
0x0184 5028	L1PINV	L1P Global Invalidate
0x0184 502C - 0x0184 5039	-	Reserved
0x0184 5040	L1DWB	L1D Global Writeback
0x0184 5044	L1DWBINV	L1D Global Writeback with Invalidate
0x0184 5048	L1DINV	L1D Global Invalidate without writeback

Table 2-2. C64x+ Cache Registers (continued)

HEX ADDRESS RANGE	REGISTER ACRONYM	DESCRIPTION
0x0184 8000 - 0x0184 80BC	MAR0 - MAR47	Reserved (corresponds to byte address 0x0000 0000 - 0x2FFF FFFF)
0x0184 80C0 - 0x0184 80FC	MAR48 - MAR63	Reserved (corresponds to byte address 0x3000 0000 - 0x3FFF FFFF)
0x0184 8100 - 0x0184 8104	MAR64 - MAR65	Reserved (corresponds to byte address 0x4000 0000 - 0x41FF FFFF)
0x0184 8108 - 0x0184 8124	MAR66 - MAR73	Memory Attribute Registers for EMIFA (corresponds to byte address 0x4200 0000 - 0x49FF FFFF)
0x0184 8128 - 0x0184 812C	MAR74 - MAR75	Reserved (corresponds to byte address 0x4A00 0000 - 0x4BFF FFFF)
0x0184 8130 - 0x0184 813C	MAR76 - MAR79	Memory Attribute Registers for VLYNQ (corresponds to byte address 0x4C00 0000 - 0x4FFF FFFF)
0x0184 8140- 0x0184 81FC	MAR80 - MAR127	Reserved (corresponds to byte address 0x5000 0000 - 0x7FFF FFFF)
0x0184 8200 - 0x0184 823C	MAR128 - MAR143	Memory Attribute Registers for DDR2 (corresponds to byte address 0x8000 0000 - 0x8FFF FFFF)
0x0184 8240 - 0x0184 83FC	MAR144 - MAR255	Reserved (corresponds to byte address 0x9000 0000 - 0xFFFF FFFF)

2.4 Memory Map Summary

Table 2-3 shows the memory map address ranges of the device. Table 2-4 depicts the expanded map of the Configuration Space (0x0180 0000 through 0x0FFF FFFF). The device has multiple on-chip memories associated with its two processors and various subsystems. To help simplify software development a unified memory map is used where possible to maintain a consistent view of device resources across all bus masters.

Table 2-3. Memory Map Summary

START ADDRESS	END ADDRESS	SIZE (Bytes)	C64x+ MEMORY MAP	EDMA PERIPHERAL MEMORY MAP	VPSS MEMORY MAP
0x0000 0000	0x000F FFFF	1M	Reserved	Reserved	Reserved
0x0010 0000	0x0010 FFFF	64K	Boot ROM		
0x0011 0000	0x007F FFFF	7M-64K	Reserved		
0x0080 0000	0x0081 FFFF	128K	L2 RAM/Cache (1)		
0x0082 0000	0x00E0 7FFF	6048K	Reserved		
0x00E0 8000	0x00E0 FFFF	32K	L1P RAM/Cache (1)		
0x00E1 0000	0x00F0 3FFF	976K	Reserved		
0x00F0 4000	0x00F0 FFFF	48K	L1D RAM		
0x00F1 0000	0x00F1 7FFF	32K	L1D RAM/Cache (1)		
0x00F1 8000	0x017F FFFF	9120K	Reserved		
0x0180 0000	0x01BF FFFF	4M	CFG Space		
0x01C0 0000	0x01FF FFFF	4M	CFG Bus Peripherals	CFG Bus Peripherals	
0x0200 0000	0x100F FFFF	225M	Reserved	Reserved	
0x1010 0000	0x1010 FFFF	64K	Boot ROM		
0x1011 0000	0x107F FFFF	7M-48K	Reserved		
0x1080 0000	0x1081 FFFF	128K	L2 RAM/Cache (1)	L2 RAM/Cache (1)	
0x1082 0000	0x10E0 7FFF	6048K	Reserved	Reserved	
0x10E0 8000	0x10E0 FFFF	32K	L1P RAM/Cache (1)	L1P RAM/Cache (1)	
0x10E1 0000	0x10F0 3FFF	976K	Reserved	Reserved	
0x10F0 4000	0x10F0 FFFF	48K	L1D RAM	L1D RAM	
0x10F1 0000	0x10F1 7FFF	32K	L1D RAM/Cache (1)	L1D RAM/Cache (1)	
0x10F1 8000	0x10FF FFFF	1M-96K	Reserved	Reserved	
0x1100 0000	0x1FFF FFFF	240M	Reserved	Reserved	
0x2000 0000	0x2000 7FFF	32K	DDR2 Control Regs	DDR2 Control Regs	
0x2000 8000	0x2FFF FFFF	256M-32K	Reserved	Reserved	
0x3000 0000	0x3FFF FFFF	256M	Reserved	Reserved	
0x4000 0000	0x41FF FFFF	32M	Reserved	Reserved	
0x4200 0000	0x42FF FFFF	16M	EMIFA Data ($\overline{CS2}$) (2)	EMIFA Data ($\overline{CS2}$) (2)	
0x4300 0000	0x43FF FFFF	16M	Reserved	Reserved	
0x4400 0000	0x44FF FFFF	16M	EMIFA Data ($\overline{CS3}$) (2)	EMIFA Data ($\overline{CS3}$) (2)	
0x4500 0000	0x45FF FFFF	16M	Reserved	Reserved	
0x4600 0000	0x46FF FFFF	16M	EMIFA Data ($\overline{CS4}$) (2)	EMIFA Data ($\overline{CS4}$) (2)	
0x4700 0000	0x47FF FFFF	16M	Reserved	Reserved	
0x4800 0000	0x48FF FFFF	16M	EMIFA Data ($\overline{CS5}$) (2)	EMIFA Data ($\overline{CS5}$) (2)	
0x4900 0000	0x49FF FFFF	16M	Reserved	Reserved	
0x4A00 0000	0x4BFF FFFF	32M	Reserved	Reserved	
0x4C00 0000	0x4FFF FFFF	64M	VLYNQ (Remote Data)	VLYNQ (Remote Data)	
0x5000 0000	0x7FFF FFFF	768M	Reserved	Reserved	
0x8000 0000	0x8FFF FFFF	256M	DDR2 Memory Controller	DDR2 Memory Controller	DDR2 Memory Controller
0x9000 0000	0xFFFF FFFF	1792M	Reserved	Reserved	Reserved

(1) For all bootmodes that default to DSPBOOTADDR = 0x0010 0000 (i.e., all boot modes except the EMIFA ROM Direct Boot, BOOTMODE[3:0] = 0100, FASTBOOT = 0), the bootloader code disables all C64x+ cache (L2, L1P, and L1D) so that upon exit from the bootloader code, all C64x+ memories are configured as all RAM (L2CFG.L2MODE = 0h, L1PCFG.L1PMODE = 0h, and L1DCFG.L1DMODE = 0h). If cache use is required, the application code must explicitly enable the cache. For more information on boot modes, see Section 3.4.1, *Boot Modes*. For more information on the bootloader, see the *Using the TMS320DM643x Bootloader* Application Report (literature number SPRAAG0). For the EMIFA ROM Direct Boot (BOOTMODE[3:0] = 0100, FASTBOOT = 0), the bootloader is not executed—that is, L2 RAM/Cache defaults to all RAM (L2CFG.L2MODE = 0h); L1P RAM/Cache defaults to all cache (L1PCFG.L1PMODE = 7h); and L1D RAM/Cache defaults to all cache (L1DCFG.L1DMODE = 7h).

(2) The EMIFA $\overline{CS0}$ and $\overline{CS1}$ are ***not*** functionally supported on the DM6435 device, and therefore, are ***not*** pinned out.

Table 2-4. Configuration Memory Map Summary

START ADDRESS	END ADDRESS	SIZE (Bytes)	C64x+
0x0180 0000	0x0180 FFFF	64K	C64x+ Interrupt Controller
0x0181 0000	0x0181 0FFF	4K	C64x+ Powerdown Controller
0x0181 1000	0x0181 1FFF	4K	C64x+ Security ID
0x0181 2000	0x0181 2FFF	4K	C64x+ Revision ID
0x0182 0000	0x0182 FFFF	64K	C64x+ EMC
0x0183 0000	0x0183 FFFF	64K	Reserved
0x0184 0000	0x0184 FFFF	64K	C64x+ Memory System
0x0185 0000	0x0187 FFFF	192K	Reserved
0x0188 0000	0x01BB FFFF	3328K	Reserved
0x01BC 0000	0x01BC 00FF	256	Reserved
0x01BC 0100	0x01BC 01FF	256	Pin Manager and Trace
0x01BC 0400	0x01BF FFFF	255K	Reserved
0x01C0 0000	0x01C0 FFFF	64K	EDMA CC
0x01C1 0000	0x01C1 03FF	1K	EDMA TC0
0x01C1 0400	0x01C1 07FF	1K	EDMA TC1
0x01C1 0800	0x01C1 0BFF	1K	EDMA TC2
0x01C1 0C00	0x01C1 FFFF	29K	Reserved
0x01C2 0000	0x01C2 03FF	1K	UART0
0x01C2 0400	0x01C2 07FF	1K	UART1
0x01C2 0800	0x01C2 0FFF	2K	Reserved
0x01C2 1000	0x01C2 13FF	1K	I2C
0x01C2 1400	0x01C2 17FF	1K	Timer0
0x01C2 1800	0x01C2 1BFF	1K	Timer1
0x01C2 1C00	0x01C2 1FFF	1K	Timer2 (Watchdog)
0x01C2 2000	0x01C2 23FF	1K	PWM0
0x01C2 2400	0x01C2 27FF	1K	PWM1
0x01C2 2800	0x01C2 2BFF	1K	PWM2
0x01C2 2C00	0x01C2 2FFF	1K	Reserved
0x01C2 3000	0x01C2 3FFF	4K	HECC Control (1)
0x01C2 4000	0x01C2 53FF	5K	HECC RAM
0x01C2 5400	0x01C3 FFFF	107K	Reserved
0x01C4 0000	0x01C4 07FF	2K	System Module
0x01C4 0800	0x01C4 0BFF	1K	PLL Controller 1
0x01C4 0C00	0x01C4 0FFF	1K	PLL Controller 2
0x01C4 1000	0x01C4 1FFF	4K	Power and Sleep Controller
0x01C4 2000	0x01C6 6FFF	148K	Reserved
0x01C6 7000	0x01C6 77FF	2K	GPIO
0x01C6 7800	0x01C6 7FFF	2K	HPI
0x01C6 8000	0x01C6 FFFF	32K	Reserved
0x01C7 0000	0x01C7 3FFF	16K	VPSS Registers
0x01C7 4000	0x01C7 FFFF	48K	Reserved
0x01C8 0000	0x01C8 0FFF	4K	EMAC Control Registers
0x01C8 1000	0x01C8 1FFF	4K	EMAC Control Module Registers
0x01C8 2000	0x01C8 3FFF	8K	EMAC Control Module RAM
0x01C8 4000	0x01C8 47FF	2K	MDIO Control Registers

(1) Software ***must not*** access "Reserved" locations of the HECC. Access to HECC "Reserved" locations may hang the device.

Table 2-4. Configuration Memory Map Summary (continued)

START ADDRESS	END ADDRESS	SIZE (Bytes)	C64x+
0x01C8 4800	0x01CF FFFF	494K	Reserved
0x01D0 0000	0x01D0 07FF	2K	McBSP0
0x01D0 0800	0x01D0 0FFF	2K	Reserved
0x01D0 1000	0x01D0 13FF	1K	McASP0 Control
0x01D0 1400	0x01D0 17FF	1K	McASP0 Data
0x01D0 1800	0x01DF FFFF	1018K	Reserved
0x01E0 0000	0x01E0 0FFF	4K	EMIFA Control
0x01E0 1000	0x01E0 1FFF	4K	VLYNQ Control Registers
0x01E0 2000	0x0FFF FFFF	226M-8K	Reserved

2.5 Pin Assignments

Extensive use of pin multiplexing is used to accommodate the largest number of peripheral functions in the smallest possible package. Pin multiplexing is controlled using a combination of hardware configuration at device reset and software programmable register settings. For more information on pin muxing, see Section 3.7, *Multiplexed Pin Configurations* of this document.

2.5.1 Pin Map (Bottom View)

Figure 2-2 through Figure 2-5 show the bottom view of the **ZWT** package pin assignments in four quadrants (A, B, C, and D). Figure 2-6 through Figure 2-9 show the bottom view of the **ZDU** package pin assignments in four quadrants (A, B, C, and D).

	1	2	3	4	5	6	7	8	9	10	
W	V_{SS}	V_{SS}	DDR_D[7]	DDR_D[9]	DDR_D[12]	DDR_D[14]	DDR_CLK	$\overline{\text{DDR\_CLK}}$	DDR_A[12]	DDR_A[11]	W
V	DV_{DDR2}	DDR_D[4]	DDR_D[6]	DDR_D[8]	DDR_D[11]	DDR_D[13]	DDR_D[15]	DDR_CKE	DDR_BA[1]	DDR_A[8]	V
U	DDR_D[2]	DDR_D[3]	DDR_D[5]	DDR_DQS[0]	DDR_D[10]	DDR_DQS[1]	$\overline{\text{DDR\_RAS}}$	DDR_BA[0]	DDR_BA[2]	DDR_A[10]	U
T	DDR_D[0]	DDR_D[1]	RSV16	DDR_DQM[0]	DV_{DDR2}	DDR_DQM[1]	$\overline{\text{DDR\_CAS}}$	$\overline{\text{DDR\_WE}}$	$\overline{\text{DDR\_CS}}$	DDR_ZN	T
R	V_{SS}	$\overline{\text{TRST}}$	TMS	DV_{DDR2}	V_{SS}	DV_{DDR2}	V_{SS}	DV_{DDR2}	V_{SS}	DV_{DDR2}	R
P	DV_{DD33}	EMU0	TDO	TDI	DV_{DDR2}	V_{SS}	DV_{DDR2}	V_{SS}	DV_{DDR2}	V_{SS}	P
N	TCK	EMU1	$\overline{\text{RESETOUT}}$	$\overline{\text{POR}}$	V_{SS}	DV_{DD33}	V_{SS}	CV_{DD}	V_{SS}	CV_{DD}	N
M	CLKOUT0/ PWM2/ GP[84]	SCL	SDA	$\overline{\text{RESET}}$	DV_{DD33}	V_{SS}	CV_{DD}	V_{SS}	CV_{DD}	V_{SS}	M
L	UCTS0 GP[87]	URXD0/ GP[85]	URTS0/ PWM0/ GP[88]	HECC_RX/ TINP1L/ URXD1/ GP[56]	RSV3	DV_{DD33}	V_{SS}	CV_{DD}	V_{SS}	CV_{DD}	L
K	V_{SS}	TINP0L/ GP[98]	UTXD0/ GP[86]	HECC_TX/ TOUT1L/ UTXD1/ GP[55]	RSV2	V_{SS}	CV_{DD}	V_{SS}	CV_{DD}	V_{SS}	K
	1	2	3	4	5	6	7	8	9	10	

Figure 2-2. ZWT Pin Map [Quadrant A]

	11	12	13	14	15	16	17	18	19	
W	DDR_A[6]	DDR_A[5]	DDR_A[0]	DDR_D[16]	DDR_D[18]	DDR_D[21]	DDR_D[27]	DV_{DDR2}	DV_{DDR2}	W
V	DDR_A[7]	DDR_A[4]	DDR_A[2]	DDR_D[17]	DDR_D[19]	DDR_D[22]	DDR_D[24]	DDR_D[29]	V_{SS}	V
U	DDR_A[9]	DDR_A[3]	DDR_A[1]	DDR_DQS[2]	DDR_D[20]	DDR_DQS[3]	DDR_D[25]	DDR_D[28]	DDR_D[30]	U
T	DDR_ZP	DDR_VDDDLL	DDR_VSSDLL	DDR_DQM[2]	DDR_VREF	DDR_DQM[3]	DDR_D[23]	DDR_D[26]	DDR_D[31]	T
R	V_{SS}	DV_{DDR2}	RSV5	DV_{DDR2}	V_{SS}	DV_{DDR2}	V_{SS}	V_{SS}	V_{SS}	R
P	DV_{DDR2}	V_{SS}	DV_{DDR2}	V_{SS}	RSV14	RSV11	RSV12	RSV8	RSV7	P
N	V_{SS}	CV_{DD}	V_{SS}	V_{SS}	RSV13	RSV15	RSV10	RSV9	RSV6	N
M	CV_{DD}	V_{SS}	CV_{DD}	V_{SS}	DV_{DD33}	V_{SS}	V_{SS}	V_{SS}	V_{SS}	M
L	V_{SS}	CV_{DD}	V_{SS}	DV_{DDR2}	RSV4	PLL_{PWR18}	V_{SS}	MXV_{DD}	V_{SS}	L
K	CV_{DD}	V_{SS}	CV_{DD}	V_{SS}	DV_{DD33}	V_{SS}	DV_{DD33}	MXV_{SS}	MXI/ CLKIN	K
	11	12	13	14	15	16	17	18	19	

Figure 2-3. ZWT Pin Map [Quadrant B]

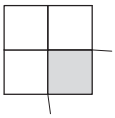

	11	12	13	14	15	16	17	18	19	
J	V_{SS}	CV_{DD}	V_{SS}	DV_{DD33}	V_{SS}	DV_{DD33}	V_{SS}	V_{SS}	MXO	J
H	CV_{DD}	V_{SS}	CV_{DD}	V_{SS}	GP[29]	GP[28]	GP[27]	DV_{DD33}	V_{SS}	H
G	V_{SS}	DV_{DD33}	V_{SS}	DV_{DD33}	GP[24]/ (BOOTMODE2)	GP[25]/ (BOOTMODE3)	GP[26]/ (FASTBOOT)	V_{SS}	GP[30]	G
F	DV_{DD33}	V_{SS}	DV_{DD33}	V_{SS}	GP[23]/ (BOOTMODE1)	EM_D[6]/ GP[20]	EM_D[7]/ GP[21]	GP[22]/ (BOOTMODE0)	$\overline{EM\_CS5}$/ GP[33]	F
E	RSV18	RSV19	V_{SS}	$\overline{EM\_WE}$	EM_WAIT/ (RDY/$\overline{BSY}$)	EM_D[3]/ GP[17]	EM_D[5]/ GP[19]	EM_D[4]/ GP[18]	$\overline{EM\_CS4}$/ GP[32]	E
D	CI2(CCD10)/ EM_A[18]/ EM_D[5]/ GP[46]	C_FIELD/ EM_A[21]/ GP[34]	C_WE/ EM_R/$\overline{W}$/ GP[35]	YI4(CCD4)/ GP[40]	$\overline{EM\_OE}$	EM_D[0]/ GP[14]	EM_D[2]/ GP[16]	EM_D[1]/ GP[15]	GP[31]	D
C	CI4(CCD12)/ EM_A[16]/ EM_D[3]/ GP[48]	CI0(CCD8)/ EM_A[20]/ EM_D[7]/ GP[44]	YI5(CCD5)/ GP[41]	YI2(CCD2)/ GP[38]	YI0(CCD0)/ GP[36]	EM_BA[1]/ GP[5]/ (AEM0)	EM_BA[0]/ GP[6]/ (AEM1)	$\overline{EM\_CS3}$/ GP[13]	$\overline{EM\_CS2}$/ GP[12]	C
B	CI5(CCD13)/ EM_A[15]/ EM_D[2]/ GP[49]	CI1(CCD9)/ EM_A[19]/ EM_D[6]/ GP[45]	YI6(CCD6)/ GP[42]	YI3(CCD3)/ GP[39]	YI1(CCD1)/ GP[37]	EM_A[2]/ (CLE)/GP[8]/ (AEAW0/ PLLMS0)	EM_A[0]/ GP[7]/ (AEM2)	LCD_FIELD/ EM_A[3]/ GP[11]	V_{SS}	B
A	CI3(CCD11)/ EM_A[17]/ EM_D[4]/ GP[47]	YI7(CCD7)/ GP[43]	VD/ GP[53]	PCLK/ GP[54]	HD/ GP[52]	EM_A[1]/ (ALE)/GP[9]/ (AEAW1/ PLLMS1)	EM_A[4]/ GP[10]/ (AEAW2/ PLLMS2)	DV_{DD33}	V_{SS}	A
	11	12	13	14	15	16	17	18	19	

Figure 2-4. ZWT Pin Map [Quadrant C]

	1	2	3	4	5	6	7	8	9	10	
J	DV_{DD33}	AHCLKR0/ CLKR0/ GP[101]	AXR0[1]/ DX0/ GP[104]	CLKS0/ TOUT0L/ GP[97]	V_{SS}	DV_{DD33}	V_{SS}	CV_{DD}	V_{SS}	CV_{DD}	J
H	ACLKR0/ CLKX0/ GP[99]	AXR0[0]/ GP[105]	AXR0[2]/ GP[103]	AFSR0/ DR0/ GP[100]	DV_{DD33}	V_{SS}	CV_{DD}	V_{SS}	CV_{DD}	V_{SS}	H
G	AHCLKX0/ GP[108]	AFSX0/ GP[107]	AMUTE0/ GP[110]	AXR0[3]/ GP[102]	V_{SS}	DV_{DD33}	V_{SS}	DV_{DD33}	V_{SS}	DV_{DD33}	G
F	ACLKX0/ GP[106]	AMUTEIN0/ GP[109]	GP[4]/ PWM1	V_{SS}	DV_{DD33}	V_{SS}	DV_{DD33}	V_{SS}	DV_{DD33}	V_{SS}	F
E	GP[0]	GP[1]	GP[2]	GP[3]	RSV1	DV_{DD33}	V_{SS}	DV_{DD33}	V_{SS}	RSV17	E
D	$\overline{HAS}$/ MDIO/ GP[83]	$\overline{HRDY}$/ MRXD2/ GP[80]	HCNTL1/ MTXEN/ GP[75]	HD14/ MTXD0/ GP[72]	HD12/ MTXD2/ GP[70]	HD6/ VLYNQ_TXD1/ GP[64]	HD1/ VLYNQ_RXD0/ GP[59]	EM_A[6]/ GP[95]	EM_A[9]/ GP[92]	EM_A[12]/ GP[89]	D
C	$\overline{HCS}$/ MDCLK/ GP[81]	$\overline{HINT}$/ MRXD3/ GP[82]	$\overline{HDS2}$/ MRXD0/ GP[78]	HHWIL/ MRXDV/ GP[74]	HD11/ MTXD3/ GP[69]	HD9/ MCOL/ GP[67]	HD4/ VLYNQ_RXD3/ GP[62]	HD0/ VLYNQ_ SCRUN/ GP[58]	EM_A[7]/ GP[94]	EM_A[11]/ GP[90]	C
B	V_{SS}	$\overline{HDS1}$/ MRXD1/ GP[79]	HCNTL0/ MRXER/ GP[76]	HD13/ MTXD1/ GP[71]	HD10/ MCRS/ GP[68]	HD7/ VLYNQ_TXD2/ GP[65]	HD3/ VLYNQ_RXD2/ GP[61]	EM_A[5]/ GP[96]	EM_A[8]/ GP[93]	CI7(CCD15)/ EM_A[13]/ EM_D[0]/ GP[51]	B
A	DV_{DD33}	DV_{DD33}	HR/$\overline{W}$/ MRXCLK/ GP[77]	HD15/ MTXCLK/ GP[73]	HD8/ VLYNQ_TXD3/ GP[66]	HD5/ VLYNQ_TXD0/ GP[63]	VLYNQ_ CLOCK/ GP[57]	HD2/ VLYNQ_RXD1/ GP[60]	EM_A[10]/ GP[91]	CI6(CCD14)/ EM_A[14]/ EM_D[1]/ GP[50]	A
	1	2	3	4	5	6	7	8	9	10	

Figure 2-5. ZWT Pin Map [Quadrant D]

	1	2	3	4	5	6	7	8	9	10	11	
AB	V_{SS}	V_{SS}	DDR_D[6]	DDR_D[8]	DDR_D[12]	DDR_D[15]	DDR_CLK0	$\overline{\text{DDR\_CLK0}}$	DDR_BS[1]	DDR_BS[2]	DDR_A[10]	AB
AA	DV_{DDR2}	DDR_D[3]	DDR_D[4]	DDR_DQS[0]	DDR_D[10]	DDR_D[13]	DDR_DQS[1]	DDR_CKE	DDR_BS[0]	DDR_A[12]	DDR_A[11]	AA
Y	DDR_D[0]	DDR_D[1]	DDR_D[5]	DDR_DQM[0]	DDR_D[11]	DDR_D[14]	DDR_DQM[1]	$\overline{\text{DDR\_RAS}}$	$\overline{\text{DDR\_CAS}}$	$\overline{\text{DDR\_WE}}$	$\overline{\text{DDR\_CS}}$	Y
W	V_{SS}	DDR_D[2]	RSV17	DDR_D[7]	DDR_D[9]	V_{SS}	DV_{DDR2}	V_{SS}	DV_{DDR2}	V_{SS}	DV_{DDR2}	W
V	DV_{DDR2}	$\overline{\text{TRST}}$	TMS	DV_{DDR2}	V_{SS}	DV_{DDR2}	V_{SS}	DV_{DDR2}	V_{SS}	DV_{DDR2}	V_{SS}	V
U	TCK	TDO	TDI	V_{SS}	DV_{DDR2}	U	6	7	8	9	10	11
T	EMU0	EMU1	$\overline{\text{RESETOUT}}$	DV_{DD33}	V_{SS}	T						
R	CLKOUT0/ PWM2/ GP[84]	$\overline{\text{POR}}$	$\overline{\text{RESET}}$	V_{SS}	DV_{DD33}	R						
P	UCTS0/ GP[87]	SDA	HECC_RX/ TINP1L/ URXD1/ GP[56]	DV_{DD33}	V_{SS}	P			V_{SS}	CV_{DD}	CV_{DD}	P
N	UTXD0/ GP[86]	SCL	HECC_TX/ TOUT1L/ UTXD1/ GP[55]	V_{SS}	DV_{DD33}	N			CV_{DD}	V_{SS}	V_{SS}	N
M	V_{SS}	URXD0/ GP[85]	URTS0/ PWM0/ GP[88]	RSV3	V_{SS}	M			CV_{DD}	CV_{DD}	V_{SS}	M
	1	2	3	4	5				9	10	11	

Figure 2-6. ZDU Pin Map [Quadrant A]

	12	13	14	15	16	17	18	19	20	21	22	
AB	DDR_A[7]	DDR_A[4]	DDR_A[1]	DDR_A[0]	DDR_D[18]	DDR_D[21]	DDR_D[22]	DDR_D[25]	DDR_D[28]	DV_{DDR2}	DV_{DDR2}	AB
AA	DDR_A[9]	DDR_A[6]	DDR_A[3]	DDR_DQS[2]	DDR_D[16]	DDR_D[19]	DDR_DQS[3]	DDR_D[23]	DDR_D[26]	DDR_D[30]	V_{SS}	AA
Y	DDR_A[8]	DDR_A[5]	DDR_A[2]	DDR_DQM[2]	DDR_D[17]	DDR_D[20]	DDR_DQM[3]	DDR_D[24]	DDR_D[27]	DDR_D[29]	DDR_D[31]	Y
W	DDR_ZN	DDR_ZP	DDR_VDDDLL	DDR_VSSDLL	RSV5	DV_{DDR2}	DDR_VREF	DV_{DDR2}	V_{SS}	V_{SS}	V_{SS}	W
V	DV_{DDR2}	V_{SS}	DV_{DDR2}	V_{SS}	DV_{DDR2}	V_{SS}	DV_{DDR2}	V_{SS}	RSV12	RSV7	RSV6	V
	12	13	14	15	16	17						
U							V_{SS}	V_{SS}	RSV11	RSV15	RSV8	U
T							V_{SS}	RSV14	RSV13	RSV9	RSV10	T
R							V_{SS}	V_{SS}	V_{SS}	V_{SS}	V_{SS}	R
P	CV_{DD}	CV_{DD}	V_{SS}				DV_{DD33}	RSV4	DV_{DD33}	V_{SS}	DV_{DD33}	P
N	V_{SS}	V_{SS}	CV_{DD}				V_{SS}	DV_{DD33}	PLL_{PWR18}	MXV_{DD}	MXI/ CLKIN	N
M	V_{SS}	V_{SS}	CV_{DD}				DV_{DD33}	V_{SS}	DV_{DD33}	MXV_{SS}	MXO	M
	12	13	14				18	19	20	21	22	

Figure 2-7. ZDU Pin Map [Quadrant B]

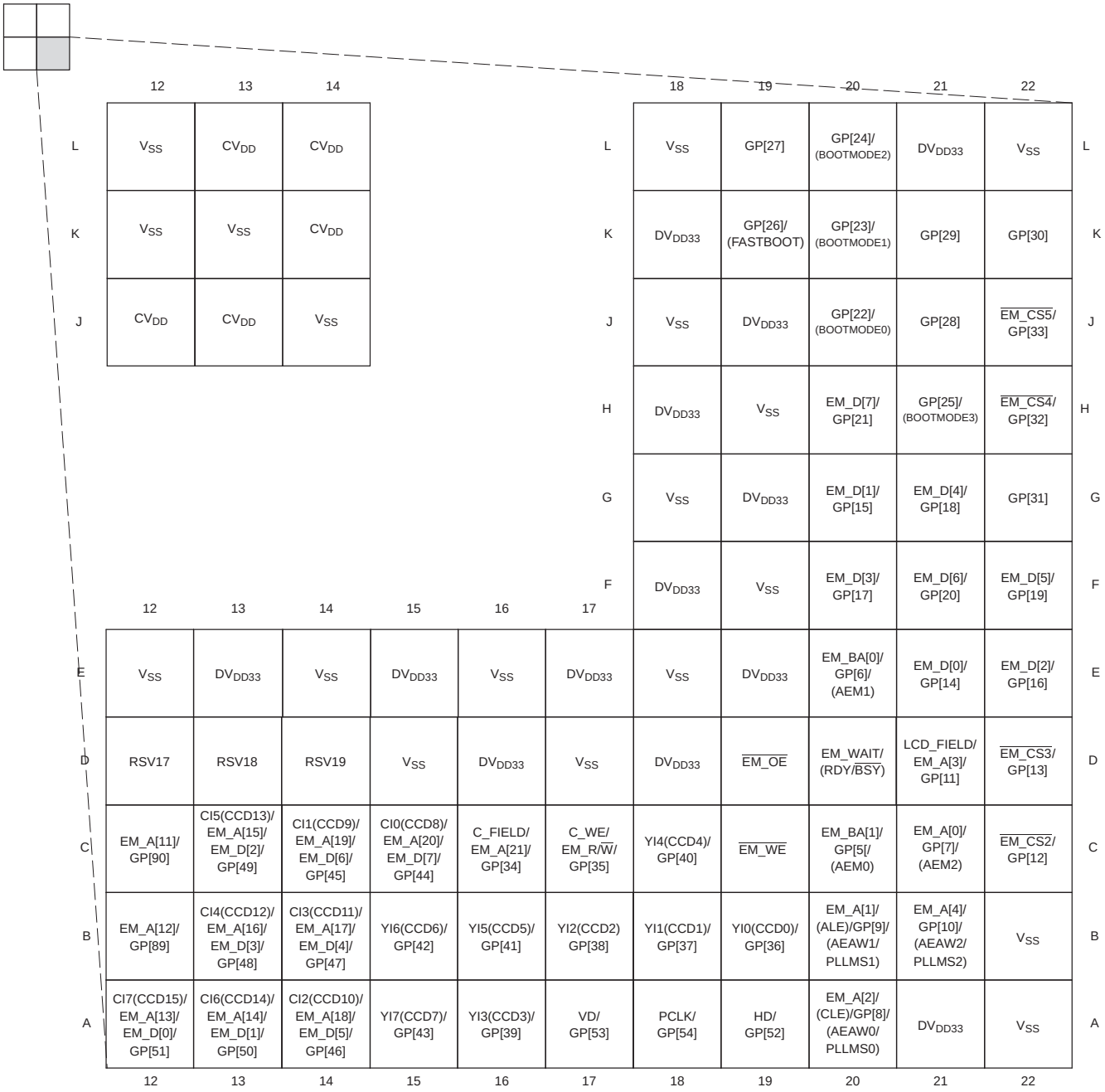

Figure 2-8. ZDU Pin Map [Quadrant C]

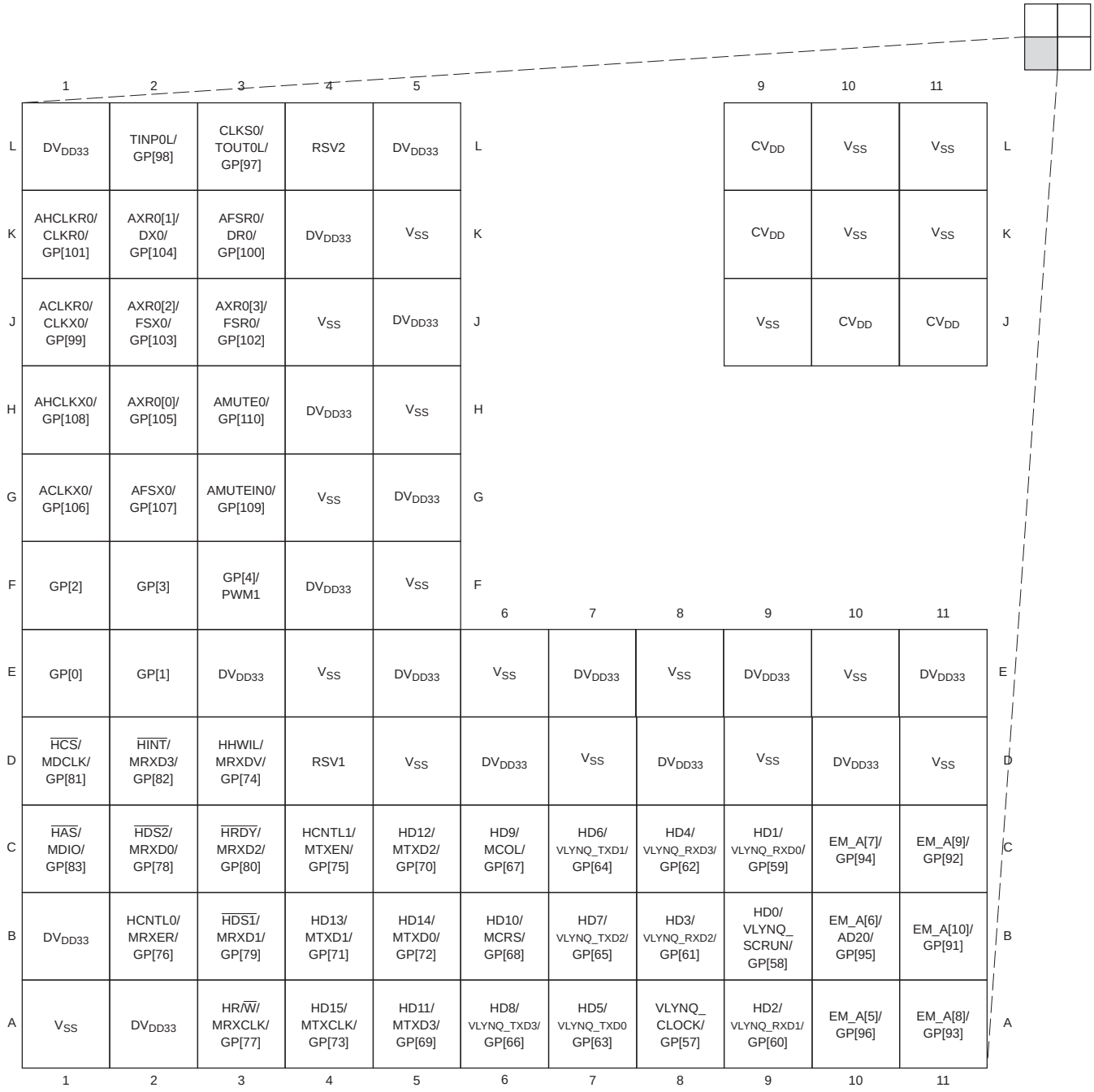

Figure 2-9. ZDU Pin Map [Quadrant D]

2.6 Terminal Functions

The terminal functions tables (Table 2-5 through Table 2-28) identify the external signal names, the associated pin (ball) numbers along with the mechanical package designator, the pin type, whether the pin has any internal pullup or pulldown resistors, and a functional pin description. For more detailed information on device configuration, peripheral selection, multiplexed/shared pin, and debugging considerations, see the Device Configurations section of this data manual.

All device boot and configuration pins are multiplexed configuration pins— meaning they are multiplexed with functional pins. These pins function as device boot and configuration pins only during device reset. The input states of these pins are sampled and latched into the BOOTCFG register when device reset is deasserted (see **Note** below). After device reset is deasserted, the values on these multiplexed pins no longer have to hold the configuration.

For proper device operation, external pullup/pulldown resistors may be required on these device boot and configuration pins. Section 3.9.1, *Pullup/Pulldown Resistors* discusses situations where external pullup/pulldown resistors are required.

Note: Internal to the chip, the two device reset pins $\overline{\text{RESET}}$ and $\overline{\text{POR}}$ are logically AND'd together for the purpose of latching device boot and configuration pins. The values on all device boot and configuration pins are latched into the BOOTCFG register when the logical AND of $\overline{\text{RESET}}$ and $\overline{\text{POR}}$ transitions from low-to-high.

Table 2-5. BOOT Terminal Functions

SIGNAL			TYPE(1)	OTHER(2)(3)	DESCRIPTION
NAME	ZWT NO.	ZDU NO.			
BOOT					
GP[25]/ (BOOTMODE3) GP[24]/ (BOOTMODE2) GP[23]/ (BOOTMODE1) GP[22]/ (BOOTMODE0)	G16 G15 F15 F18	H21 L20 K20 J20	I/O/Z	IPD DV_{DD33}	Bootmode configuration bits. These bootmode functions along with the FASTBOOT function determine what device bootmode configuration is selected. The DM6435 device supports several types of bootmodes along with a FASTBOOT option; for more details on the types/options, see Section 3.4.1, *Boot Modes*.
GP[26]/ (FASTBOOT)	G17	K19	I/O/Z	IPD DV_{DD33}	Fast Boot 0 = Not Fast Boot 1 = Fast Boot
EM_A[4]/GP[10]/ (AEAW2/PLLMS2)	A17	B21	I/O/Z	IPD DV_{DD33}	EMIFA Address Bus Width (AEAW) and Fast Boot PLL Multiplier Select (PLLMS). These configuration pins serve two purposes which are based on AEM[2:0] settings. For AEM[2:0] = 001 [8-bit EMIFA (Async) Pinout Mode 1], the AEAW/PLLMS pins serve as the AEAW function to select EMIFA Address Bus Width. For all other AEM modes, the AEAW/PLLMS pins select the PLL multiplier for fast boot. For more details, see Section 3.5.1.2, *EMIFA Address Width Select (AEAW) and Fast Boot PLL Multipler Select (PLLMS).*
EM_A[1]/(ALE)/ GP[9]/(AEAW1/PLLMS1)	A16	B20	I/O/Z	IPD DV_{DD33}	
EM_A[2]/(CLE)/ GP[8]/(AEAW0/PLLMS0)	B16	A20	I/O/Z	IPD DV_{DD33}	

(1) I = Input, O = Output, Z = High impedance, S = Supply voltage, GND = Ground, A = Analog signal
(2) IPD = Internal pulldown, IPU = Internal pullup. For more detailed information on pullup/pulldown resistors and situations where external pullup/pulldown resistors are required, see Section 3.9.1, *Pullup/Pulldown Resistors*.
(3) Specifies the operating I/O supply voltage for each signal

Table 2-5. BOOT Terminal Functions (continued)

SIGNAL			TYPE[1]	OTHER[2][3]	DESCRIPTION
NAME	ZWT NO.	ZDU NO.			
EM_A[0]/GP[7]/ (AEM2)	B17	C21	I/O/Z	IPD DV_{DD33}	Selects EMIFA Pinout Mode The DM6435 supports the following EMIFA Pinout Modes: AEM[2:0] = 000, No EMIFA AEM[2:0] = 001, 8-bit EMIFA (Async) Pinout Mode 1 AEM[2:0] = 101, 8-bit EMIFA (NAND) Pinout Mode 5 This signal doesn't actually affect the EMIFA module. It only affects how the EMIFA is pinned out.
EM_BA[0]/GP[6]/ (AEM1)	C17	E20	I/O/Z	IPD DV_{DD33}	
EM_BA[1]/GP[5]/ (AEM0)	C16	C20	I/O/Z	IPD DV_{DD33}	
GP[28]	H16	J21	I/O/Z	IPD DV_{DD33}	For proper DM6435 device operation, if this pin is ***both*** routed ***and*** 3-stated (not driven) during device reset, it ***must*** be pulled down via an external resistor. For more detailed information on pullup/pulldown resistors, see Section 3.9.1, *Pullup/Pulldown Resistors*.
GP[27]	H17	L19	I/O/Z	IPU DV_{DD33}	For proper DM6435 device operation, if this pin is ***both*** routed ***and*** 3-stated (not driven) during device reset, it ***must*** be pulled up via an external resistor. For more detailed information on pullup/pulldown resistors, see Section 3.9.1, *Pullup/Pulldown Resistors*.

Table 2-6. Oscillator/PLL Terminal Functions

SIGNAL			TYPE[1]	OTHER[2]	DESCRIPTION
NAME	ZWT NO.	ZDU NO.			
OSCILLATOR, PLL					
MXI/ CLKIN	K19	N22	I	MXV_{DD}	Crystal input MXI for MX oscillator (system oscillator, typically 27 MHz). If the internal oscillator is bypassed, this is the external oscillator clock input.[3]
MXO	J19	M22	O	MXV_{DD}	Crystal output for MX oscillator
MXV_{DD}	L18	N21	S	[4]	1.8 V power supply for MX oscillator. On the board, this pin can be connected to the same 1.8 V power supply as DV_{DDR2}.
MXV_{SS}	K18	M21	GND	[4]	Ground for MX oscillator
PLL_{PWR18}	L16	N20	S	[4]	1.8 V power supply for PLLs

(1) I = Input, O = Output, Z = High impedance, S = Supply voltage, GND = Ground, A = Analog signal
(2) Specifies the operating I/O supply voltage for each signal
(3) For more information on external board connections, see Section 6.6, *External Clock Input From MXI/CLKIN Pin*.
(4) For more information, see the *Recommended Operating Conditions* table

Table 2-7. Clock Generator Terminal Functions

SIGNAL			TYPE[1]	OTHER[2][3]	DESCRIPTION
NAME	ZWT NO.	ZDU NO.			
CLOCK GENERATOR					
CLKOUT0/ PWM2/GP[84]	M1	R1	I/O/Z	IPD DV_{DD33}	This pin is multiplexed between the System Clock generator (PLL1), PWM2, and GPIO. For the System Clock generator (PLL1), it is clock output CLKOUT0. This is configurable for 27 MHz or other 27 MHz-divided-down (/1 to /32) clock outputs.

(1) I = Input, O = Output, Z = High impedance, S = Supply voltage, GND = Ground, A = Analog signal
(2) IPD = Internal pulldown, IPU = Internal pullup. For more detailed information on pullup/pulldown resistors and situations where external pullup/pulldown resistors are required, see Section 3.9.1, *Pullup/Pulldown Resistors*.
(3) Specifies the operating I/O supply voltage for each signal

Table 2-8. RESET and JTAG Terminal Functions

SIGNAL			TYPE(1)	OTHER(2)(3)	DESCRIPTION
NAME	ZWT NO.	ZDU NO.			
RESET					
$\overline{\text{RESET}}$	M4	R3	I	IPU DV_{DD33}	Device reset
$\overline{\text{RESETOUT}}$	N3	T3	O/Z	– DV_{DD33}	Reset output status pin. The $\overline{\text{RESETOUT}}$ pin indicates when the device is in reset.
$\overline{\text{POR}}$	N4	R2	I	IPU DV_{DD33}	Power-on reset.
JTAG					
TMS	R3	V3	I	IPU DV_{DD33}	JTAG test-port mode select input. For proper device operation, ***do not*** oppose the IPU on this pin.
TDO	P3	U2	O/Z	– DV_{DD33}	JTAG test-port data output
TDI	P4	U3	I	IPU DV_{DD33}	JTAG test-port data input
TCK	N1	U1	I	IPU DV_{DD33}	JTAG test-port clock input
$\overline{\text{TRST}}$	R2	V2	I	IPD DV_{DD33}	JTAG test-port reset. For IEEE 1149.1 JTAG compatibility, see the IEEE 1149.1 JTAG compatibility statement portion of this data sheet
EMU1	N2	T2	I/O/Z	IPU DV_{DD33}	Emulation pin 1
EMU0	P2	T1	I/O/Z	IPU DV_{DD33}	Emulation pin 0

(1) I = Input, O = Output, Z = High impedance, S = Supply voltage, GND = Ground, A = Analog signal
(2) IPD = Internal pulldown, IPU = Internal pullup. For more detailed information on pullup/pulldown resistors and situations where external pullup/pulldown resistors are required, see Section 3.9.1, *Pullup/Pulldown Resistors*.
(3) Specifies the operating I/O supply voltage for each signal

Table 2-9. EMIFA Terminal Functions (Boot Configuration)

SIGNAL			TYPE[1]	OTHER[2][3]	DESCRIPTION
NAME	ZWT NO.	ZDU NO.			
EMIFA: BOOT CONFIGURATION					
EM_A[4]/GP[10]/ (AEAW2/PLLMS2)	A17	B21	I/O/Z	IPD DV_{DD33}	These pins are multiplexed between the EMIFA and GPIO. When $\overline{RESET}$ or $\overline{POR}$ is asserted, these pins function as EMIFA configuration pins. At reset if AEM[2:0] = 001 (EMIFA in 8-bit Async mode), then the input states of AEAW[2:0] are sampled to set the EMIFA Address Bus Width. After reset, these pins function as EMIFA or GPIO pin functions based on pin mux selection. For more details on the AEAW/PLLMS functions, see Section 3.5.1.2, *EMIFA Address Width Select (AEAW) and Fast Boot PLL Multipler Select (PLLMS).*
EM_A[1]/(ALE)/GP[9]/ (AEAW1/PLLMS1)	A16	B20	I/O/Z	IPD DV_{DD33}	
EM_A[2]/(CLE)/GP[8]/ (AEAW0/PLLMS0)	B16	A20	I/O/Z	IPD DV_{DD33}	
EM_BA[1]/GP[5]/ (AEM0)	C16	C20	I/O/Z	IPD DV_{DD33}	These pins are multiplexed between the EMIFA and GPIO. When $\overline{RESET}$ or $\overline{POR}$ is asserted, these pins function as EMIFA configuration pins. At reset, the input states of AEM[2:0] are sampled to set the EMIFA Pinout Mode. For more details, see Section 3.5.1, *Configurations at Reset*. After reset, these pins function as EMIFA or GPIO pin functions based on pin mux selection. For more details on the AEM functions, see Section 3.5.1.1, *EMIFA Pinout Mode (AEM[2:0])*.
EM_BA[0]/GP[6]/ (AEM1)	C17	E20	I/O/Z	IPD DV_{DD33}	
EM_A[0]/GP[7]/ (AEM2)	B17	C21	I/O/Z	IPD DV_{DD33}	

(1) I = Input, O = Output, Z = High impedance, S = Supply voltage, GND = Ground, A = Analog signal
(2) IPD = Internal pulldown, IPU = Internal pullup. For more detailed information on pullup/pulldown resistors and situations where external pullup/pulldown resistors are required, see Section 3.9.1, *Pullup/Pulldown Resistors*.
(3) Specifies the operating I/O supply voltage for each signal

Table 2-10. EMIFA Terminal Functions (EMIFA Pinout Mode 1, AEM[2:0] = 001)

SIGNAL			TYPE(1)	OTHER(2)(3)	DESCRIPTION
NAME	ZWT NO.	ZDU NO.			
EMIFA FUNCTIONAL PINS: 8-Bit ASYNC/NOR (EMIFA Pinout Mode 1, AEM[2:0] = 001)					
Actual pin functions are determined by the PINMUX0 and PINMUX1 register bit settings (e.g., AEAW[2:0], AEM[2:0], etc.). For more details, see Section 3.7, *Multiplexed Pin Configurations*.					
$\overline{\text{EM\_CS2}}$/ GP[12]	C19	C22	I/O/Z	IPD DV_{DD33}	This pin is multiplexed between EMIFA and GPIO. For EMIFA, this pin is Chip Select 2 output $\overline{\text{EM\_CS2}}$ for use with asynchronous memories (i.e., NOR flash). This is the chip select for the default boot and ROM boot modes. ***Note:*** This pin features an internal pulldown (IPD). If this pin is connected and used as an EMIFA chip select signal, for proper device operation, an external pullup resistor ***must*** be used to ensure the $\overline{\text{EM\_CSx}}$ function defaults to an inactive (high) state.
$\overline{\text{EM\_CS3}}$/ GP[13]	C18	D22	I/O/Z	IPD DV_{DD33}	This pin is multiplexed between EMIFA and GPIO. For EMIFA, this pin is Chip Select 3 output $\overline{\text{EM\_CS3}}$ for use with asynchronous memories (i.e., NOR flash). ***Note:*** This pin features an internal pulldown (IPD). If this pin is connected and used as an EMIFA chip select signal, for proper device operation, an external pullup resistor ***must*** be used to ensure the $\overline{\text{EM\_CSx}}$ function defaults to an inactive (high) state.
$\overline{\text{EM\_CS4}}$/ GP[32]	E19	H22	I/O/Z	IPD DV_{DD33}	This pin is multiplexed between EMIFA and GPIO. For EMIFA, it is Chip Select 4 output $\overline{\text{EM\_CS4}}$ for use with asynchronous memories (i.e., NOR flash). ***Note:*** This pin features an internal pulldown (IPD). If this pin is connected and used as an EMIFA chip select signal, for proper device operation, an external pullup resistor ***must*** be used to ensure the $\overline{\text{EM\_CSx}}$ function defaults to an inactive (high) state.
$\overline{\text{EM\_CS5}}$/ GP[33]	F19	J22	I/O/Z	IPD DV_{DD33}	This pin is multiplexed between EMIFA and GPIO. For EMIFA, it is Chip Select 5 output $\overline{\text{EM\_CS5}}$ for use with asynchronous memories (i.e., NOR flash). ***Note:*** This pin features an internal pulldown (IPD). If this pin is connected and used as an EMIFA chip select signal, for proper device operation, an external pullup resistor ***must*** be used to ensure the $\overline{\text{EM\_CSx}}$ function defaults to an inactive (high) state.
C_WE/EM_R/$\overline{\text{W}}$/ GP[35]	D13	C17	I/O/Z	IPD DV_{DD33}	This pin is multiplexed between VPFE (CCDC), EMIFA, and GPIO. For EMIFA, it is read/write output EM_R/$\overline{\text{W}}$.
EM_WAIT/ (RDY/BSY)	E15	D20	I/O/Z	IPU DV_{DD33}	For EMIFA (ASYNC/NOR), this pin is wait state extension input EM_WAIT.
$\overline{\text{EM\_OE}}$	D15	D19	I/O/Z	IPU DV_{DD33}	For EMIFA, it is output enable output $\overline{\text{EM\_OE}}$.
$\overline{\text{EM\_WE}}$	E14	C19	I/O/Z	IPU DV_{DD33}	For EMIFA, it is write enable output $\overline{\text{EM\_WE}}$.
EM_BA[0]/GP[6]/ (AEM1)	C17	E20	I/O/Z	IPD DV_{DD33}	This pin is multiplexed between EMIFA and GPIO. For EMIFA, this is the Bank Address 0 output (EM_BA[0]). When connected to an 8-bit asynchronous memory, this pin is the lowest order bit of the byte address.
EM_BA[1]/GP[5]/ (AEM0)	C16	C20	I/O/Z	IPD DV_{DD33}	This pin is multiplexed between EMIFA and GPIO. For EMIFA, this is the Bank Address 1 output EM_BA[1]. When connected to an 8-bit asynchronous memory, this pin is the 2nd bit of the address.

(1) I = Input, O = Output, Z = High impedance, S = Supply voltage, GND = Ground, A = Analog signal
(2) IPD = Internal pulldown, IPU = Internal pullup. For more detailed information on pullup/pulldown resistors and situations where external pullup/pulldown resistors are required, see Section 3.9.1, *Pullup/Pulldown Resistors*.
(3) Specifies the operating I/O supply voltage for each signal

Table 2-10. EMIFA Terminal Functions (EMIFA Pinout Mode 1, AEM[2:0] = 001) (continued)

SIGNAL			TYPE[1]	OTHER[2][3]	DESCRIPTION
NAME	ZWT NO.	ZDU NO.			
C_FIELD/ EM_A[21]/GP[34]	D12	C16	I/O/Z	IPD DV_{DD33}	This pin is multiplexed between VPFE (CCDC), EMIFA, and GPIO. For EMIFA, it is address bit 21 output EM_A[21].
CI0(CCD8)/ EM_A[20]/GP[44]	C12	C15	I/O/Z	IPD DV_{DD33}	This pin is multiplexed between VPFE (CCDC), EMIFA, and GPIO. For EMIFA (AEM[2:0] = 001), this pin is address bit 20 output EM_A[20] if AEAW[2:0] = 100b.
CI1(CCD9)/ EM_A[19]/GP[45]	B12	C14	I/O/Z	IPD DV_{DD33}	This pin is multiplexed between VPFE (CCDC), EMIFA, and GPIO. For EMIFA (AEM[2:0] = 001), this pin is address bit 19 output EM_A[19] if AEAW[2:0] = 100b.
CI2(CCD10)/ EM_A[18]/GP[46]	D11	A14	I/O/Z	IPD DV_{DD33}	This pin is multiplexed between VPFE (CCDC), EMIFA, and GPIO. For EMIFA (AEM[2:0] = 001), this pin is address bit 18 output EM_A[18] if AEAW[2:0] = 011/100b.
CI3(CCD11)/ EM_A[17]/GP[47]	A11	B14	I/O/Z	IPD DV_{DD33}	This pin is multiplexed between VPFE (CCDC), EMIFA, and GPIO. For EMIFA (AEM[2:0] = 001), this pin is address bit 17 output EM_A[17] if AEAW[2:0] = 011/100b.
CI4(CCD12)/ EM_A[16]/GP[48]	C11	B13	I/O/Z	IPD DV_{DD33}	This pin is multiplexed between VPFE (CCDC), EMIFA, and GPIO. For EMIFA (AEM[2:0] = 001), this pin is address bit 16 output EM_A[16] if AEAW[2:0] = 010/011/100b.
CI5(CCD13)/ EM_A[15]/GP[49]	B11	C13	I/O/Z	IPD DV_{DD33}	This pin is multiplexed between VPFE (CCDC), EMIFA, and GPIO. For EMIFA (AEM[2:0] = 001), this pin is address bit 15 output EM_A[15] if AEAW[2:0] = 010/011/100b.
CI6(CCD14)/ EM_A[14]/GP[50]	A10	A13	I/O/Z	IPD DV_{DD33}	This pin is multiplexed between VPFE (CCDC), EMIFA, and GPIO. For EMIFA (AEM[2:0] = 001), this pin is address bit 14 output EM_A[14] if AEAW[2:0] = 001/010/011/100b.
CI7(CCD15)/ EM_A[13]/GP[51]	B10	A12	I/O/Z	IPD DV_{DD33}	This pin is multiplexed between VPFE (CCDC), EMIFA, and GPIO. For EMIFA (AEM[2:0] = 001), this pin is address bit 13 output EM_A[13] if AEAW[2:0] = 001/010/011/100b.
EM_A[12]/GP[89]	D10	B12	I/O/Z	IPD DV_{DD33}	This pin is multiplexed between EMIFA and GPIO. For EMIFA, this pin is address bit 12 output EM_A[12].
EM_A[11]/GP[90]	C10	C12	I/O/Z	IPD DV_{DD33}	This pin is multiplexed between EMIFA and GPIO. For EMIFA, this pin is address bit 11 output EM_A[11].
EM_A[10]/GP[91]	A9	B11	I/O/Z	IPD DV_{DD33}	This pin is multiplexed between EMIFA and GPIO. For EMIFA, this pin is address bit 10 output EM_A[10].
EM_A[9]/GP[92]	D9	C11	I/O/Z	IPD DV_{DD33}	This pin is multiplexed between EMIFA and GPIO. For EMIFA, this pin is address bit 9 output EM_A[9].
EM_A[8]/GP[93]	B9	A11	I/O/Z	IPD DV_{DD33}	This pin is multiplexed between EMIFA and GPIO. For EMIFA, this pin is address bit 8 output EM_A[8].
EM_A[7]/GP[94]	C9	C10	I/O/Z	IPD DV_{DD33}	This pin is multiplexed between EMIFA and GPIO. For EMIFA, this pin is address bit 7 output EM_A[7].
EM_A[6]/GP[95]	D8	B10	I/O/Z	IPD DV_{DD33}	This pin is multiplexed between EMIFA and GPIO. For EMIFA, this pin is address bit 6 output EM_A[6].
EM_A[5]/GP[96]	B8	A10	I/O/Z	IPD DV_{DD33}	This pin is multiplexed between EMIFA and GPIO. For EMIFA, this pin is address bit 5 output EM_A[5].
EM_A[4]/GP[10]/ (AEAW2/PLLMS2)	A17	B21	I/O/Z	IPD DV_{DD33}	This pin is multiplexed between EMIFA and GPIO. For EMIFA, this pin is address bit 4 output EM_A[4].

Table 2-10. EMIFA Terminal Functions (EMIFA Pinout Mode 1, AEM[2:0] = 001) (continued)

SIGNAL			TYPE[1]	OTHER[2][3]	DESCRIPTION
NAME	ZWT NO.	ZDU NO.			
EM_A[3]/GP[11]	B18	D21	I/O/Z	IPD DV_{DD33}	This pin is multiplexed between EMIFA and GPIO. For EMIFA, this pin is address bit 3 output EM_A[3].
EM_A[2]/(CLE)/GP[8]/(AEAW0/PLLMS0)	B16	A20	I/O/Z	IPD DV_{DD33}	This pin is multiplexed between EMIFA and GPIO. For EMIFA, this pin is address bit 2 output EM_A[2].
EM_A[1]/(ALE)/GP[9]/(AEAW1/PLLMS1)	A16	B20	I/O/Z	IPD DV_{DD33}	This pin is multiplexed between EMIFA and GPIO. For EMIFA, this pin is address output EM_A[1].
EM_A[0]/GP[7]/(AEM2)	B17	C21	I/O/Z	IPD DV_{DD33}	This pin is multiplexed between EMIFA and GPIO. For EMIFA, this pin is Address output EM_A[0], which is the least significant bit on a 32-bit word address. For an 8-bit asynchronous memory, this pin is the 3rd bit of the address.
EM_D0/GP[14]	D16	E21	I/O/Z	IPD DV_{DD33}	These pins are multiplexed between EMIFA and GPIO. For EMIFA (AEM[2:0] = 001), these pins are the 8-bit bi-directional data bus (EM_D[7:0]).
EM_D1/GP[15]	D18	G20	I/O/Z	IPD DV_{DD33}	
EM_D2/GP[16]	D17	E22	I/O/Z	IPD DV_{DD33}	
EM_D3/GP[17]	E16	F20	I/O/Z	IPD DV_{DD33}	
EM_D4/GP[18]	E18	G21	I/O/Z	IPD DV_{DD33}	
EM_D5/GP[19]	E17	F22	I/O/Z	IPD DV_{DD33}	
EM_D6/GP[20]	F16	F21	I/O/Z	IPD DV_{DD33}	
EM_D7/GP[21]	F17	H20	I/O/Z	IPD DV_{DD33}	
EMIFA FUNCTIONAL PINS: 8-Bit NAND (EMIFA Pinout Mode 1, AEM[2:0] = 001)					
EM_A[1]/(ALE)/GP[9]/(AEAW1/PLLMS1)	A16	B20	I/O/Z	IPD DV_{DD33}	This pin is multiplexed between EMIFA (NAND) and GPIO. When used for EMIFA (NAND) , this pin is the Address Latch Enable output (ALE).
EM_A[2]/(CLE)/GP[8]/(AEAW0/PLLMS0)	B16	A20	I/O/Z	IPD DV_{DD33}	This pin is multiplexed between EMIFA (NAND) and GPIO. When used for EMIFA (NAND), this pin is the Command Latch Enable output (CLE).
EM_WAIT/(RDY/$\overline{BSY}$)	E15	D20	I/O/Z	IPU DV_{DD33}	When used for EMIFA (NAND), it is ready/busy input (RDY/$\overline{BSY}$).
$\overline{EM\_OE}$	D15	D19	I/O/Z	IPU DV_{DD33}	When used for EMIFA (NAND), this pin is read enable output ($\overline{RE}$).
$\overline{EM\_WE}$	E14	C19	I/O/Z	IPU DV_{DD33}	When used for EMIFA (NAND), this pin is write enable output ($\overline{WE}$).
$\overline{EM\_CS2}$/GP[12]	C19	C22	I/O/Z	IPD DV_{DD33}	This pin is multiplexed between EMIFA (NAND) and GPIO. For EMIFA (NAND), this pin is Chip Select 2 output $\overline{EM\_CS2}$ for use with NAND flash. This is the chip select for the default boot and ROM boot modes. ***Note:*** This pin features an internal pulldown (IPD). If this pin is connected and used as an EMIFA chip select signal, for proper device operation, an external pullup resistor ***must*** be used to ensure the $\overline{EM_CS}$x function defaults to an inactive (high) state.

Table 2-10. EMIFA Terminal Functions (EMIFA Pinout Mode 1, AEM[2:0] = 001) (continued)

SIGNAL			TYPE[1]	OTHER[2][3]	DESCRIPTION
NAME	ZWT NO.	ZDU NO.			
$\overline{\text{EM\_CS3}}$/ GP[13]	C18	D22	I/O/Z	IPD DV_{DD33}	This pin is multiplexed between EMIFA (NAND) and GPIO. For EMIFA (NAND), this pin is Chip Select 3 output $\overline{\text{EM\_CS3}}$ for use with NAND flash. ***Note:*** This pin features an internal pulldown (IPD). If this pin is connected and used as an EMIFA chip select signal, for proper device operation, an external pullup resistor ***must*** be used to ensure the $\overline{\text{EM\_CSx}}$ function defaults to an inactive (high) state.
$\overline{\text{EM\_CS4}}$/ GP[32]	E19	H22	I/O/Z	IPD DV_{DD33}	This pin is multiplexed between EMIFA (NAND) and GPIO. For EMIFA (NAND), it is Chip Select 4 output $\overline{\text{EM\_CS4}}$ for use with NAND flash. ***Note:*** This pin features an internal pulldown (IPD). If this pin is connected and used as an EMIFA chip select signal, for proper device operation, an external pullup resistor ***must*** be used to ensure the $\overline{\text{EM\_CSx}}$ function defaults to an inactive (high) state.
$\overline{\text{EM\_CS5}}$/ GP[33]	F19	J22	I/O/Z	IPD DV_{DD33}	This pin is multiplexed between EMIFA (NAND) and GPIO. For EMIFA (NAND), it is Chip Select 5 output $\overline{\text{EM\_CS5}}$ for use with NAND flash. ***Note:*** This pin features an internal pulldown (IPD). If this pin is connected and used as an EMIFA chip select signal, for proper device operation, an external pullup resistor ***must*** be used to ensure the $\overline{\text{EM\_CSx}}$ function defaults to an inactive (high) state.
EM_D0/GP[14]	D16	E21	I/O/Z	IPD DV_{DD33}	These pins are multiplexed between EMIFA (NAND) and GPIO. For EMIFA (NAND) AEM[2:0] = 001, these are the 8-bit bi-directional data bus (EM_D[7:0]).
EM_D1/GP[15]	D18	G20	I/O/Z	IPD DV_{DD33}	
EM_D2/GP[16]	D17	E22	I/O/Z	IPD DV_{DD33}	
EM_D3/GP[17]	E16	F20	I/O/Z	IPD DV_{DD33}	
EM_D4/GP[18]	E18	G21	I/O/Z	IPD DV_{DD33}	
EM_D5/GP[19]	E17	F22	I/O/Z	IPD DV_{DD33}	
EM_D6/GP[20]	F16	F21	I/O/Z	IPD DV_{DD33}	
EM_D7/GP[21]	F17	H20	I/O/Z	IPD DV_{DD33}	

Table 2-11. EMIFA Terminal Functions (EMIFA Pinout Mode 5, AEM[2:0] = 101)

SIGNAL			TYPE(1)	OTHER(2)(3)	DESCRIPTION
NAME	ZWT NO.	ZDU NO.			
EMIFA FUNCTIONAL PINS: 8-Bit NAND (EMIFA Pinout Mode 5, AEM[2:0] = 101)					
Actual pin functions are determined by the PINMUX0 and PINMUX1 register bit settings (e.g., AEAW[2:0], AEM[2:0], etc.). For more details, see Section 3.7, *Multiplexed Pin Configurations*.					
EM_A[1]/(ALE)/GP[9]/ (AEAW1/PLLMS1)	A16	B20	I/O/Z	IPD DV_{DD33}	This pin is multiplexed between EMIFA (NAND) and GPIO. When used for EMIFA (NAND) , this pin is the Address Latch Enable output (ALE).
EM_A[2]/(CLE)/GP[8]/ (AEAW0/PLLMS0)	B16	A20	I/O/Z	IPD DV_{DD33}	This pin is multiplexed between EMIFA (NAND) and GPIO. When used for EMIFA (NAND) , this pin is the Command Latch Enable output (CLE).
EM_WAIT/ (RDY/$\overline{BSY}$)	E15	D20	I/O/Z	IPU DV_{DD33}	When used for EMIFA (NAND), it is ready/busy input (RDY/$\overline{BSY}$).
$\overline{EM\_OE}$	D15	D19	I/O/Z	IPU DV_{DD33}	When used for EMIFA (NAND), this pin is read enable output ($\overline{RE}$).
$\overline{EM\_WE}$	E14	C19	I/O/Z	IPU DV_{DD33}	When used for EMIFA (NAND), this pin is write enable output ($\overline{WE}$).
$\overline{EM\_CS2}$/GP[12]	C19	C22	I/O/Z	IPD DV_{DD33}	This pin is multiplexed between EMIFA (NAND) and GPIO. For EMIFA, this pin is Chip Select 2 output $\overline{EM\_CS2}$ for use with NAND flash. This is the chip select for the default boot and ROM boot modes. ***Note:*** This pin features an internal pulldown (IPD). If this pin is connected and used as an EMIFA chip select signal, for proper device operation, an external pullup resistor ***must*** be used to ensure the $\overline{EM_CS}$x function defaults to an inactive (high) state.
$\overline{EM\_CS3}$/GP[13]	C18	D22	I/O/Z	IPD DV_{DD33}	This pin is multiplexed between EMIFA (NAND) and GPIO. For EMIFA, this pin is Chip Select 3 output $\overline{EM\_CS3}$ for use with NAND flash. ***Note:*** This pin features an internal pulldown (IPD). If this pin is connected and used as an EMIFA chip select signal, for proper device operation, an external pullup resistor ***must*** be used to ensure the $\overline{EM_CS}$x function defaults to an inactive (high) state.
$\overline{EM\_CS4}$/GP[32]	E19	H22	I/O/Z	IPD DV_{DD33}	This pin is multiplexed between EMIFA (NAND) and GPIO. For EMIFA, it is Chip Select 4 output $\overline{EM\_CS4}$ for use with NAND flash. ***Note:*** This pin features an internal pulldown (IPD). If this pin is connected and used as an EMIFA chip select signal, for proper device operation, an external pullup resistor ***must*** be used to ensure the $\overline{EM_CS}$x function defaults to an inactive (high) state.
$\overline{EM\_CS5}$/GP[33]	F19	J22	I/O/Z	IPD DV_{DD33}	This pin is multiplexed between EMIFA (NAND) and GPIO. For EMIFA, it is Chip Select 5 output $\overline{EM\_CS5}$ for use with NAND flash. ***Note:*** This pin features an internal pulldown (IPD). If this pin is connected and used as an EMIFA chip select signal, for proper device operation, an external pullup resistor ***must*** be used to ensure the $\overline{EM_CS}$x function defaults to an inactive (high) state.

(1) I = Input, O = Output, Z = High impedance, S = Supply voltage, GND = Ground, A = Analog signal
(2) IPD = Internal pulldown, IPU = Internal pullup. For more detailed information on pullup/pulldown resistors and situations where external pullup/pulldown resistors are required, see Section 3.9.1, *Pullup/Pulldown Resistors*.
(3) Specifies the operating I/O supply voltage for each signal

Table 2-11. EMIFA Terminal Functions (EMIFA Pinout Mode 5, AEM[2:0] = 101) (continued)

SIGNAL			TYPE[1]	OTHER[2][3]	DESCRIPTION
NAME	ZWT NO.	ZDU NO.			
EM_D0/GP[14]	D16	E21	I/O/Z	IPD DV_{DD33}	These pins are multiplexed between EMIFA (NAND) and GPIO. For EMIFA AEM[2:0] = 101 (NAND), these are the 8-bit bi-directional data bus (EM_D[7:0]).
EM_D1/GP[15]	D18	G20	I/O/Z	IPD DV_{DD33}	
EM_D2/GP[16]	D17	E22	I/O/Z	IPD DV_{DD33}	
EM_D3/GP[17]	E16	F20	I/O/Z	IPD DV_{DD33}	
EM_D4/GP[18]	E18	G21	I/O/Z	IPD DV_{DD33}	
EM_D5/GP[19]	E17	F22	I/O/Z	IPD DV_{DD33}	
EM_D6/GP[20]	F16	F21	I/O/Z	IPD DV_{DD33}	
EM_D7/GP[21]	F17	H20	I/O/Z	IPD DV_{DD33}	

Table 2-12. DDR2 Memory Controller Terminal Functions

SIGNAL			TYPE[1]	OTHER[2][3]	DESCRIPTION
NAME	ZWT NO.	ZDU NO.			
DDR2 Memory Controller					
DDR_CLK	W7	AB7	I/O/Z	DV_{DDR2}	DDR2 Clock Output
$\overline{\text{DDR\_CLK}}$	W8	AB8	I/O/Z	DV_{DDR2}	DDR2 Differential Clock Output
DDR_CKE	V8	AA8	I/O/Z	DV_{DDR2}	DDR2 Clock Enable Output
$\overline{\text{DDR\_CS}}$	T9	Y11	I/O/Z	DV_{DDR2}	DDR2 Active Low Chip Select Output
$\overline{\text{DDR\_WE}}$	T8	Y10	I/O/Z	DV_{DDR2}	DDR2 Active Low Write Enable Output
DDR_DQM[3]	T16	Y18	I/O/Z	DV_{DDR2}	DDR2 Data Mask Outputs DQM3: For upper byte data bus DDR_D[31:24] DQM2: For DDR_D[23:16] DQM1: For DDR_D[15:8] DQM0: For lower byte DDR_D[7:0]
DDR_DQM[2]	T14	Y15	I/O/Z	DV_{DDR2}	
DDR_DQM[1]	T6	Y7	I/O/Z	DV_{DDR2}	
DDR_DQM[0]	T4	Y4	I/O/Z	DV_{DDR2}	
$\overline{\text{DDR\_RAS}}$	U7	Y8	I/O/Z	DV_{DDR2}	DDR2 Row Access Signal Output
$\overline{\text{DDR\_CAS}}$	T7	Y9	I/O/Z	DV_{DDR2}	DDR2 Column Access Signal Output
DDR_DQS[0]	U4	AA4	I/O/Z	DV_{DDR2}	Data Strobe Input/Outputs for each byte of the 32-bit data bus. They are outputs to the DDR2 memory when writing and inputs when reading. They are used to synchronize the data transfers. DQS3 : For upper byte DDR_D[31:24] DQS2: For DDR_D[23:16] DQS1: For DDR_D[15:8] DQS0: For bottom byte DDR_D[7:0]
DDR_DQS[1]	U6	AA7	I/O/Z	DV_{DDR2}	
DDR_DQS[2]	U14	AA15	I/O/Z	DV_{DDR2}	
DDR_DQS[3]	U16	AA18	I/O/Z	DV_{DDR2}	
DDR_BA[0]	U8	AA9	I/O/Z	DV_{DDR2}	Bank Select Outputs (BA[2:0]). Two are required to support 1Gb DDR2 memories.
DDR_BA[1]	V9	AB9			
DDR_BA[2]	U9	AB10			
DDR_A[12]	W9	AA10	I/O/Z	DV_{DDR2}	DDR2 Address Bus Output
DDR_A[11]	W10	AA11			
DDR_A[10]	U10	AB11			
DDR_A[9]	U11	AA12			
DDR_A[8]	V10	Y12			
DDR_A[7]	V11	AB12			
DDR_A[6]	W11	AA13			
DDR_A[5]	W12	Y13			
DDR_A[4]	V12	AB13			
DDR_A[3]	U12	AA14			
DDR_A[2]	V13	Y14			
DDR_A[1]	U13	AB14			
DDR_A[0]	W13	AB15			

(1) I = Input, O = Output, Z = High impedance, S = Supply voltage, GND = Ground, A = Analog signal
(2) IPD = Internal pulldown, IPU = Internal pullup. For more detailed information on pullup/pulldown resistors and situations where external pullup/pulldown resistors are required, see Section 3.9.1, *Pullup/Pulldown Resistors*.
(3) Fore more information, see the *Recommended Operating Conditions* table

Table 2-12. DDR2 Memory Controller Terminal Functions (continued)

SIGNAL			TYPE[1]	OTHER[2][3]	DESCRIPTION
NAME	ZWT NO.	ZDU NO.			
DDR_D[31]	T19	Y22	I/O/Z	DV_{DDR2}	DDR2 bi-directional data bus can be configured as 32-bits wide or 16-bits wide.
DDR_D[30]	U19	AA21			
DDR_D[29]	V18	Y21			
DDR_D[28]	U18	AB20			
DDR_D[27]	W17	Y20			
DDR_D[26]	T18	AA20			
DDR_D[25]	U17	AB19			
DDR_D[24]	V17	Y19			
DDR_D[23]	T17	AA19			
DDR_D[22]	V16	AB18			
DDR_D[21]	W16	AB17			
DDR_D[20]	U15	Y17			
DDR_D[19]	V15	AA17			
DDR_D[18]	W15	AB16			
DDR_D[17]	V14	Y16			
DDR_D[16]	W14	AA16			
DDR_D[15]	V7	AB6			
DDR_D[14]	W6	Y6			
DDR_D[13]	V6	AA6			
DDR_D[12]	W5	AB5			
DDR_D[11]	V5	Y5			
DDR_D[10]	U5	AA5			
DDR_D[9]	W4	W5			
DDR_D[8]	V4	AB4			
DDR_D[7]	W3	W4			
DDR_D[6]	V3	AB3			
DDR_D[5]	U3	Y3			
DDR_D[4]	V2	AA3			
DDR_D[3]	U2	AA2			
DDR_D[2]	U1	W2			
DDR_D[1]	T2	Y2			
DDR_D[0]	T1	Y1			
DDR_VREF	T15	W18	I	[3]	Reference voltage input for the SSTL_18 I/O buffers
DDR_VSSDLL	T13	W15	GND	[3]	Ground for the DDR2 DLL
DDR_VDDDLL	T12	W14	S	[3]	Power (1.8 Volts) for the DDR2 Digital Locked Loop
DDR_ZN	T10	W12		[3]	Impedance control for DDR2 outputs. This ***must be*** connected via a 200-Ω resistor to DV_{DDR2}.
DDR_ZP	T11	W13		[3]	Impedance control for DDR2 outputs. This ***must be*** connected via a 200-Ω resistor to V_{SS}.

Table 2-13. EMAC and MDIO Terminal Functions

SIGNAL			TYPE (1)	OTHER (2) (3)	DESCRIPTION
NAME	ZWT NO.	ZDU NO.			
EMAC					
HCNTL1/MTXEN/ GP[75]	D3	C4	I/O/Z	IPD DV_{DD33}	This pin is multiplexed between HPI, Ethernet MAC (EMAC), and GPIO. In Ethernet MAC mode, it is Transmit Enable output MTXEN.
HD15/MTXCLK/ GP[73]	A4	A4	I/O/Z	IPD DV_{DD33}	This pin is multiplexed between HPI, Ethernet MAC (EMAC), and GPIO. In Ethernet MAC mode, it is Transmit Clock input MTXCLK.
HD9/MCOL/ GP[67]	C6	C6	I/O/Z	IPD DV_{DD33}	This pin is multiplexed between HPI, Ethernet MAC (EMAC), and GPIO. In Ethernet MAC mode, it is Collision Detect input MCOL.
HD11/MTXD3/ GP[69]	C5	A5	I/O/Z	IPD DV_{DD33}	This pin is multiplexed between HPI, Ethernet MAC (EMAC), and GPIO. In Ethernet MAC mode, it is Transmit Data 3 output MTXD3.
HD12/MTXD2/ GP[70]	D5	C5	I/O/Z	IPD DV_{DD33}	This pin is multiplexed between HPI, Ethernet MAC (EMAC), and GPIO. In Ethernet MAC mode, it is Transmit Data 2 output MTXD2.
HD13/MTXD1/ GP[71]	B4	B4	I/O/Z	IPD DV_{DD33}	This pin is multiplexed between HPI, Ethernet MAC (EMAC), and GPIO. In Ethernet MAC mode, it is Transmit Data 1 output MTXD1.
HD14/MTXD0/ GP[72]	D4	B5	I/O/Z	IPD DV_{DD33}	This pin is multiplexed between HPI, Ethernet MAC (EMAC), and GPIO. In Ethernet MAC mode, it is Transmit Data 0 output MTXD0.
HR/$\overline{W}$/MRXCLK/ GP[77]	A3	A3	I/O/Z	IPD DV_{DD33}	This pin is multiplexed between HPI, Ethernet MAC (EMAC), and GPIO. In Ethernet MAC mode, it is Receive Clock input MRXCLK.
HHWIL/MRXDV/ GP[74]	C4	D3	I/O/Z	IPD DV_{DD33}	This pin is multiplexed between HPI, Ethernet MAC (EMAC), and GPIO. In Ethernet MAC mode, it is Receive Data Valid input MRXDV.
HCNTL0/MRXER/ GP[76]	B3	B2	I/O/Z	IPD DV_{DD33}	This pin is multiplexed between HPI, Ethernet MAC (EMAC), and GPIO. In Ethernet MAC mode, it is Receive Error input MRXER.
HD10/MCRS/ GP[68]	B5	B6	I/O/Z	IPD DV_{DD33}	This pin is multiplexed between HPI, Ethernet MAC (EMAC), and GPIO. In Ethernet MAC mode, it is Carrier Sense input MCRS.
$\overline{HINT}$/MRXD3/ GP[82]	C2	D2	I/O/Z	IPU DV_{DD33}	This pin is multiplexed between HPI, Ethernet MAC (EMAC), and GPIO. In Ethernet MAC mode, it is Receive Data 3 input MRXD3.
$\overline{HRDY}$/MRXD2/ GP[80]	D2	C3	I/O/Z	IPU DV_{DD33}	This pin is multiplexed between HPI, Ethernet MAC (EMAC), and GPIO. In Ethernet MAC mode, it is Receive Data 2 input MRXD2.
$\overline{HDS1}$/MRXD1/ GP[79]	B2	B3	I/O/Z	IPU DV_{DD33}	This pin is multiplexed between HPI, Ethernet MAC (EMAC), and GPIO. In Ethernet MAC mode, it is Receive data 1 input MRXD1.
$\overline{HDS2}$/MRXD0/ GP[78]	C3	C2	I/O/Z	IPU DV_{DD33}	This pin is multiplexed between HPI, Ethernet MAC (EMAC), and GPIO. In Ethernet MAC mode, it is Receive Data 0 input MRXD0.
MDIO					
$\overline{HCS}$/MDCLK/ GP[81]	C1	D1	I/O/Z	IPU DV_{DD33}	This pin is multiplexed between HPI, MDIO, and GPIO. In Ethernet MAC mode, it is Management Data Clock output MDCLK.
$\overline{HAS}$/MDIO/ GP[83]	D1	C1	I/O/Z	IPU DV_{DD33}	This pin is multiplexed between HPI, MDIO, and GPIO. In Ethernet MAC mode, it is Management Data IO MDIO (I/O/Z).

(1) I = Input, O = Output, Z = High impedance, S = Supply voltage, GND = Ground, A = Analog signal
(2) IPD = Internal pulldown, IPU = Internal pullup. For more detailed information on pullup/pulldown resistors and situations where external pullup/pulldown resistors are required, see Section 3.9.1, *Pullup/Pulldown Resistors*.
(3) Specifies the operating I/O supply voltage for each signal

Table 2-14. VLYNQ Terminal Functions

SIGNAL			TYPE[1]	OTHER[2][3]	DESCRIPTION
NAME	ZWT NO.	ZDU NO.			
VLYNQ					
VLYNQ_CLOCK/ GP[57]	A7	A8	I/O/Z	IPU DV_{DD33}	This pin is multiplexed between VLYNQ, and GPIO. For VLYNQ, it is the clock VLYNQ_CLOCK (I/O/Z).
HD0/VLYNQ_SCRUN/ GP[58]	C8	B9	I/O/Z	IPU DV_{DD33}	This pin is multiplexed between HPI, VLYNQ, and GPIO. For VLYNQ, it is the Serial Clock run request VLYNQ_SCRUN (I/O/Z).
HD8/VLYNQ_TXD3/ GP[66]	A5	A6	I/O/Z	IPD DV_{DD33}	This pin is multiplexed between HPI, VLYNQ, and GPIO. For VLYNQ, it is transmit bus bit 3 output VLYNQ_TXD3.
HD7/VLYNQ_TXD2/ GP[65]	B6	B7	I/O/Z	IPD DV_{DD33}	This pin is multiplexed between HPI, VLYNQ, and GPIO. For VLYNQ, it is transmit bus bit 2 output VLYNQ_TXD2.
HD6/VLYNQ_TXD1/ GP[64]	D6	C7	I/O/Z	IPD DV_{DD33}	This pin is multiplexed between HPI, VLYNQ, and GPIO. For VLYNQ, it is transmit bus bit 1 output VLYNQ_TXD1.
HD5/VLYNQ_TXD0/ GP[63]	A6	A7	I/O/Z	IPD DV_{DD33}	This pin is multiplexed between HPI, VLYNQ, and GPIO. For VLYNQ, it is transmit bus bit 0 output (VLYNQ_TXD0).
HD4/VLYNQ_RXD3/ GP[62]	C7	C8	I/O/Z	IPD DV_{DD33}	This pin is multiplexed between HPI, VLYNQ, and GPIO. For VLYNQ, it is receive bus bit 3 input VLYNQ_RXD3.
HD3/VLYNQ_RXD2/ GP[61]	B7	B8	I/O/Z	IPD DV_{DD33}	This pin is multiplexed between HPI, VLYNQ, and GPIO. For VLYNQ, it is receive bus bit 2 input VLYNQ_RXD2.
HD2/VLYNQ_RXD1/ GP[60]	A8	A9	I/O/Z	IPD DV_{DD33}	This pin is multiplexed between HPI, VLYNQ, and GPIO. For VLYNQ, it is receive bus bit 1 input VLYNQ_RXD1.
HD1/VLYNQ_RXD0/ GP[59]	D7	C9	I/O/Z	IPD DV_{DD33}	This pin is multiplexed between HPI, VLYNQ, and GPIO. For VLYNQ, it is receive bus bit 0 input VLYNQ_RXD0.

(1) I = Input, O = Output, Z = High impedance, S = Supply voltage, GND = Ground, A = Analog signal
(2) IPD = Internal pulldown, IPU = Internal pullup. For more detailed information on pullup/pulldown resistors and situations where external pullup/pulldown resistors are required, see Section 3.9.1, *Pullup/Pulldown Resistors*.
(3) Specifies the operating I/O supply voltage for each signal

Table 2-15. Host-Port Interface Terminal Functions

SIGNAL			TYPE(1)	OTHER(2)(3)	DESCRIPTION
NAME	ZWT NO.	ZDU NO.			
Host-Port Interface (HPI)					
HD0/VLYNQ_SCRUN/ GP[58]	C8	B9	I/O/Z	IPU DV_{DD33}	This pin is multiplexed between HPI, VLYNQ or EMAC, and GPIO. In HPI mode, these pins are host-port data pins HD[15:0] (**I/O/Z**) and are multiplexed internally with the HPI address lines.
HD1/VLYNQ_RXD0/ GP[59]	D7	C9		IPD DV_{DD33}	
HD2/VLYNQ_RXD1/ GP[60]	A8	A9			
HD3/VLYNQ_RXD2/ GP[61]	B7	B8			
HD4/VLYNQ_RXD3/ GP[62]	C7	C8			
HD5/VLYNQ_TXD0/ GP[63]	A6	A7			
HD6/VLYNQ_TXD1/ GP[64]	D6	C7			
HD7/VLYNQ_TXD2/ GP[65]	B6	B7			
HD8/VLYNQ_TXD3/ GP[66]	A5	A6			
HD9/MCOL/ GP[67]	C6	C6			
HD10/MCRS/ GP[68]	B5	B6			
HD11/MTXD3/ GP[69]	C5	A5			
HD12/MTXD2/ GP[70]	D5	C5			
HD13/MTXD1/ GP[71]	B4	B4			
HD14/MTXD0/ GP[72]	D4	B5			
HD15/MTXCLK/ GP[73]	A4	A4			
HHWIL/MRXDV/ GP[74]	C4	D3	I/O/Z	IPD DV_{DD33}	This pin is multiplexed between HPI, EMAC, and GPIO. In HPI mode, this pin is half-word identification input HHWIL (**I**).
HCNTL1/MTXEN/ GP[75]	D3	C4	I/O/Z	IPD DV_{DD33}	This pin is multiplexed between HPI, EMAC, and GPIO. In HPI mode, this pin is control input 1 HCNTL1 (**I**). The state of HCNTL1 and HCNTL0 determines if address, data, or control information is being transmitted between an external host and the DM6435.
HCNTL0/MRXER/ GP[76]	B3	B2	I/O/Z	IPD DV_{DD33}	This pin is multiplexed between HPI, EMAC, and GPIO. In HPI mode, this pin is control input 0 HCNTL0 (**I**). The state of HCNTL1 and HCNTL0 determines if address, data, or control information is being transmitted between an external host and the DM6435.
HR/$\overline{W}$/MRXCLK/ GP[77]	A3	A3	I/O/Z	IPD DV_{DD33}	This pin is multiplexed between HPI, EMAC, and GPIO. In HPI mode, this pin is host read or write select HR/$\overline{W}$(**I**).
$\overline{HDS2}$/MRXD0/ GP[78]	C3	C2	I/O/Z	IPU DV_{DD33}	This pin is multiplexed between HPI, EMAC, and GPIO. In HPI mode, this pin is host data strobe input 2 $\overline{HDS2}$ (**I**).
$\overline{HDS1}$/MRXD1/ GP[79]	B2	B3	I/O/Z	IPU DV_{DD33}	This pin is multiplexed between HPI, EMAC, and GPIO. In HPI mode, this pin is host data strobe input 1 $\overline{HDS1}$ (**I**).

(1) I = Input, O = Output, Z = High impedance, S = Supply voltage, GND = Ground, A = Analog signal
(2) IPD = Internal pulldown, IPU = Internal pullup. For more detailed information on pullup/pulldown resistors and situations where external pullup/pulldown resistors are required, see Section 3.9.1, *Pullup/Pulldown Resistors*.
(3) Specifies the operating I/O supply voltage for each signal

Table 2-15. Host-Port Interface Terminal Functions (continued)

SIGNAL			TYPE[1]	OTHER[2][3]	DESCRIPTION
NAME	ZWT NO.	ZDU NO.			
$\overline{\text{HRDY}}$/MRXD2/ GP[80]	D2	C3	I/O/Z	IPU DV_{DD33}	This pin is multiplexed between HPI, EMAC, and GPIO. In HPI mode, this pin is host ready output from DSP to host (**O/Z**).
$\overline{\text{HCS}}$/MDCLK/ GP[81]	C1	D1	I/O/Z	IPU DV_{DD33}	This pin is multiplexed between HPI, MDIO, and GPIO. In HPI mode, this pin is HPI active low chip select input $\overline{\text{HCS}}$ (**I**).
$\overline{\text{HINT}}$/RXD3/ GP[82]	C2	D2	I/O/Z	IPU DV_{DD33}	This pin is multiplexed between HPI, EMAC, and GPIO. In HPI mode, this pin is host interrupt output $\overline{\text{HINT}}$ (**O/Z**).
$\overline{\text{HAS}}$/MDIO/ GP[83]	D1	C1	I/O/Z	IPU DV_{DD33}	This pin is multiplexed between HPI, MDIO, and GPIO. In HPI mode, this pin is host address strobe $\overline{\text{HAS}}$ (**I**). For proper HPI operation, if this pin is routed out, it ***must be*** pulled up via an external resistor.

Table 2-16. VPFE Terminal Functions

SIGNAL			TYPE[1]	OTHER[2][3]	DESCRIPTION
NAME	ZWT NO.	ZDU NO.			
VIDEO/IMAGE IN (VPFE)					
PCLK/GP[54]	A14	A18	I/O/Z	IPD DV_{DD33}	This pin is multiplexed between the VPFE (CCDC) and GPIO. In VPFE mode, this pin is the pixel clock input (PCLK) used to load image data into the CCD Controller (CCDC) on pins CI[7:0] and YI[7:0].
VD/GP[53]	A13	A17	I/O/Z	IPD DV_{DD33}	This pin is multiplexed between the VPFE (CCDC) and GPIO. In VPFE mode, this pin is the vertical synchronization signal (VD) that can be either an input (slave mode) or an output (master mode), which signals the start of a new frame to the CCDC.
HD/GP[52]	A15	A19	I/O/Z	IPD DV_{DD33}	This pin is multiplexed between the VPFE (CCDC) and GPIO. In VPFE mode, this pin is the horizontal synchronization signal (HD) that can be either an input (slave mode) or an output (master mode), which signals the start of a new line to the CCDC.
CI7(CCD15)/ EM_A[13]/GP[51]	B10	A12	I/O/Z	IPD DV_{DD33}	This pin is multiplexed between the VPFE (CCDC), EMIFA, and GPIO. When used by the CCDC as input CI7, it supports several modes: In 16-bit CCD Raw mode, it is input CCD15. In 16-bit YCbCr mode, it is time multiplexed between CB7, and CR7 inputs.[4] In 8-bit YCbCr mode, it is time multiplexed between Y7, CB7, and CR7 of the upper 8-bit channel.[4]
CI6(CCD14)/ EM_A[14]/GP[50]	A10	A13	I/O/Z	IPD DV_{DD33}	This pin is multiplexed between the VPFE (CCDC), EMIFA, and GPIO. When used by the CCDC as input CI6, it supports several modes: In 16-bit CCD Raw mode, it is input CCD14. In 16-bit YCbCr mode, it is time multiplexed between CB6, and CR6 inputs.[4] In 8-bit YCbCr mode, it is time multiplexed between Y6, CB6, and CR6 of the upper 8-bit channel.[4]
CI5(CCD13)/ EM_A[15]/GP[49]	B11	C13	I/O/Z	IPD DV_{DD33}	This pin is multiplexed between the VPFE (CCDC), EMIFA, and GPIO. When used by the CCDC as input CI5, it supports several modes: In 16-bit CCD Raw mode, it is input CCD13. In 16-bit YCbCr mode, it is time multiplexed between CB5 and CR5 inputs.[4] In 8-bit YCbCr mode, it is time multiplexed between Y5, CB5, and CR5 of the upper 8-bit channel.[4]
CI4(CCD12)/ EM_A[16]/GP[48]	C11	B13	I/O/Z	IPD DV_{DD33}	This pin is multiplexed between the VPFE (CCDC), EMIFA, and GPIO. When used by the CCDC as input CI4, it supports several modes: In 16-bit CCD Raw mode, it is input CCD12. In 16-bit YCbCr mode, it is time multiplexed between CB4 and CR4 inputs.[4] In 8-bit YCbCr mode, it is time multiplexed between Y4, CB4, and CR4 of the upper 8-bit channel.[4]

(1) I = Input, O = Output, Z = High impedance, S = Supply voltage, GND = Ground, A = Analog signal
(2) IPD = Internal pulldown, IPU = Internal pullup. For more detailed information on pullup/pulldown resistors and situations where external pullup/pulldown resistors are required, see Section 3.9.1, *Pullup/Pulldown Resistors*.
(3) Specifies the operating I/O supply voltage for each signal
(4) In addition to these default functions, in YCbCr mode, the VPFE CCD Configuration register CCDCFG.YCINSWP bit field allows the user to swap the function of the YI[7:0] and CI[7:0] pins.

Table 2-16. VPFE Terminal Functions (continued)

SIGNAL			TYPE[1]	OTHER[2][3]	DESCRIPTION
NAME	ZWT NO.	ZDU NO.			
CI3(CCD11)/ EM_A[17]/GP[47]	A11	B14	I/O/Z	IPD DV_{DD33}	This pin is multiplexed between the VPFE (CCDC), EMIFA, and GPIO. When used by the CCDC as input CI3, it supports several modes: In 16-bit CCD Raw mode, it is input CCD11. In 16-bit YCbCr mode, it is time multiplexed between CB3 and CR3 inputs.[4] In 8-bit YCbCr mode, it is time multiplexed between Y3, CB3, and CR3 of the upper 8-bit channel.[4]
CI2(CCD10)/ EM_A[18]/GP[46]	D11	A14	I/O/Z	IPD DV_{DD33}	This pin is multiplexed between the VPFE (CCDC), EMIFA, and GPIO. This pin is CCDC input CI2 and it supports several modes: In 16-bit CCD Raw mode, it is input CCD10. In 16-bit YCbCr mode, it is time multiplexed between CB2 and CR2 inputs.[4] In 8-bit YCbCr mode, it is time multiplexed between Y2, CB2, and CR2 of the upper 8-bit channel.[4]
CI1(CCD9)/ EM_A[19]/GP[45]	B12	C14	I/O/Z	IPD DV_{DD33}	This pin is multiplexed between the VPFE (CCDC), EMIFA, and GPIO. This pin is CCDC input CI1 and it supports several modes: In 16-bit CCD Raw mode, it is input CCD9. In 16-bit YCbCr mode, it is time multiplexed between CB1 and CR1 inputs.[4] In 8-bit YCbCr mode, it is time multiplexed between Y1, CB1, and CR1 of the upper 8-bit channel.[4]
CI0(CCD8)/ EM_A[20]/GP[44]	C12	C15	I/O/Z	IPD DV_{DD33}	This pin is multiplexed between the VPFE (CCDC), EMIFA, and GPIO. This pin is CCDC input CI0 and it supports several modes: In 16-bit CCD Raw mode, it is input CCD8. In 16-bit YCbCr mode, it is time multiplexed between CB0 and CR0 inputs.[4] In 8-bit YCbCr mode, it is time multiplexed between Y0, CB0, and CR0 of the upper 8-bit channel.[4]
YI7(CCD7)/ GP[43]	A12	A15	I/O/Z	IPD DV_{DD33}	This pin is multiplexed between the VPFE (CCDC) and GPIO. his pin is CCDC input YI7 and it supports several modes: In 16-bit CCD Raw mode, it is input CCD7. In 16-bit YCbCr mode, it is input Y7.[4] In 8-bit YCbCr mode, it is time multiplexed between Y7, CB7, and CR7 of the lower 8-bit channel.[4]
YI6(CCD6)/ GP[42]	B13	B15	I/O/Z	IPD DV_{DD33}	This pin is multiplexed between the VPFE (CCDC) and GPIO. This pin is CCDC input YI6 and it supports several modes: In 16-bit CCD Raw mode, it is input CCD6. In 16-bit YCbCr mode, it is input Y6.[4] In 8-bit YCbCr mode, it is time multiplexed between Y6, CB6, and CR6 of the lower 8-bit channel.[4]
YI5(CCD5)/ GP[41]	C13	B16	I/O/Z	IPD DV_{DD33}	This pin is multiplexed between the VPFE (CCDC) and GPIO. This pin is CCDC input YI5 and it supports several modes: In 16-bit CCD Raw mode, it is input CCD5. In 16-bit YCbCr mode, it is input Y5.[4] In 8-bit YCbCr mode, it is time multiplexed between Y5, CB5, and CR5 of the lower 8-bit channel.[4]

Table 2-16. VPFE Terminal Functions (continued)

SIGNAL			TYPE[1]	OTHER[2][3]	DESCRIPTION
NAME	ZWT NO.	ZDU NO.			
YI4(CCD4)/ GP[40]	D14	C18	I/O/Z	IPD DV_{DD33}	This pin is multiplexed between the VPFE(CCDC) and GPIO. This pin is CCDC input YI4 and it supports several modes: In 16-bit CCD Raw mode, it is input CCD4. In 16-bit YCbCr mode, it is input Y4.[4] In 8-bit YCbCr mode, it is time multiplexed between Y4, CB4, and CR4 of the lower 8-bit channel.[4]
YI3(CCD3)/ GP[39]	B14	A16	I/O/Z	IPD DV_{DD33}	This pin is multiplexed between the VPFE (CCDC) and GPIO. This pin is CCDC input YI3 and it supports several modes: In 16-bit CCD Raw mode, it is input CCD3. In 16-bit YCbCr mode, it is input Y3.[4] In 8-bit YCbCr mode, it is time multiplexed between Y3, CB3, and CR3 of the lower 8-bit channel.[4]
YI2(CCD2)/ GP[38]	C14	B17	I/O/Z	IPD DV_{DD33}	This pin is multiplexed between the VPFE (CCDC) and GPIO. This pin is CCDC input YI2 and it supports several modes: In 16-bit CCD Raw mode, it is input CCD2. In 16-bit YCbCr mode, it is input Y2.[4] In 8-bit YCbCr mode, it is time multiplexed between Y2, CB2, and CR2 of the lower 8-bit channel.[4]
YI1(CCD1)/ GP[37]	B15	B18	I/O/Z	IPD DV_{DD33}	This pin is multiplexed between the VPFE (CCDC) and GPIO. This pin is CCDC input YI1 and it supports several modes: In 16-bit CCD Raw mode, it is input CCD1. In 16-bit YCbCr mode, it is input Y1.[4] In 8-bit YCbCr mode, it is time multiplexed between Y1, CB1, and CR1 of the lower 8-bit channel.[4]
YI0(CCD0)/ GP[36]	C15	B19	I/O/Z	IPD DV_{DD3}	This pin is multiplexed between the VPFE (CCDC) and GPIO. This pin is CCDC input YI0 and it supports several modes: In 16-bit CCD Raw mode, it is input CCD0. In 16-bit YCbCr mode, it is input Y0.[4] In 8-bit YCbCr mode, it is time multiplexed between Y0, CB0, and CR0 of the lower 8-bit channel.[4]
C_WE/EM_R/$\overline{W}$/ GP[35]	D13	C17	I/O/Z	IPD DV_{DD33}	This pin is multiplexed between VPFE (CCDC), EMIFA, and GPIO. In VPFE mode, it is the CCD Controller write enable input C_WE.
C_FIELD/EM_A[21]/ GP[34]	D12	C16	I/O/Z	IPD DV_{DD33}	This pin is multiplexed between VPFE (CCDC), EMIFA, and GPIO. In VPFE mode, it is CCDC field identification bidirectional signal C_FIELD.

Table 2-17. I2C Terminal Functions

SIGNAL			TYPE(1)	OTHER(2)(3)	DESCRIPTION
NAME	ZWT NO.	ZDU NO.			
I2C					
SCL	M2	N2	I/O/Z	DV_{DD33}	For I2C, this pin is I2C clock. In I2C master mode, this pin is an output. In I2C slave mode, this pin is an input. When the I2C module is used, for proper device operation, this pin ***must*** be pulled up via an external resistor.
SDA	M3	P2	I/O/Z	DV_{DD33}	For I2C, this pin is the I2C bi-directional data signal. When the I2C module is used, for proper device operation, this pin ***must*** be pulled up via an external resistor.

(1) I = Input, O = Output, Z = High impedance, S = Supply voltage, GND = Ground, A = Analog signal
(2) IPD = Internal pulldown, IPU = Internal pullup. For more detailed information on pullup/pulldown resistors and situations where external pullup/pulldown resistors are required, see Section 3.9.1, *Pullup/Pulldown Resistors*.
(3) Specifies the operating I/O supply voltage for each signal

Table 2-18. Multichannel Buffered Serial Port 0 (McBSP0) Terminal Functions

SIGNAL			TYPE(1)	OTHER(2)(3)	DESCRIPTION
NAME	ZWT NO.	ZDU NO.			
Multichannel Buffered Serial Port 0 (McBSP0)					
For more details on pin multiplexing, see Section 3.7, *Multiplexed Pin Configurations*.					
CLKS0/TOUT0L/ GP[97]	J4	L3	I/O/Z	IPD DV_{DD33}	This pin is multiplexed between McBSP0, Timer0, and GPIO. For McBSP0, it is McBSP0 external clock source (I).
ACLKR0/CLKX0/ GP[99]	H1	J1	I/O/Z	IPD DV_{DD33}	This pin is multiplexed between McASP0, McBSP0, and GPIO. For McBSP0, it is McBSP0 transmit clock CLKX0 (I/O/Z).
AHCLKR0/CLKR0/ GP[101]	J2	K1	I/O/Z	IPD DV_{DD33}	This pin is multiplexed between McASP0, McBSP0, and GPIO. For McBSP0, it is McBSP0 receive clock CLKR0 (I/O/Z).
AXR0[2]/FSX0/ GP[103]	H3	J2	I/O/Z	IPD DV_{DD33}	This pin is multiplexed between McASP0, McBSP0, and GPIO. For McBSP0, it is McBSP0 transmit frame synchronization FSX0 (I/O/Z).
AXR0[3]/FSR0/ GP[102]	G4	J3	I/O/Z	IPD DV_{DD33}	This pin is multiplexed between McASP0, McBSP0, and GPIO. For McBSP0, it is McBSP0 receive frame synchronization FSR0 (I/O/Z).
AXR0[1]/DX0/ GP[104]	J3	K2	I/O/Z	IPD DV_{DD33}	This pin is multiplexed between McASP0, McBSP0, and GPIO. For McBSP0, it is McBSP0 data transmit output DX0 (O/Z).
AFSR0/DR0/ GP[100]	H4	K3	I/O/Z	IPD DV_{DD33}	This pin is multiplexed between McASP0, McBSP0, and GPIO. For McBSP0, it is McBSP0 data receive input DR0 (I).

(1) I = Input, O = Output, Z = High impedance, S = Supply voltage, GND = Ground, A = Analog signal
(2) IPD = Internal pulldown, IPU = Internal pullup. For more detailed information on pullup/pulldown resistors and situations where external pullup/pulldown resistors are required, see Section 3.9.1, *Pullup/Pulldown Resistors*.
(3) Specifies the operating I/O supply voltage for each signal

Table 2-19. Multichannel Audio Serial Port (McASP0) Terminal Functions

SIGNAL			TYPE (1)	OTHER (2) (3)	DESCRIPTION
NAME	ZWT NO.	ZDU NO.			
McASP0					
AMUTEIN0/ GP[109]	F2	G3	I/O/Z	IPD DV_{DD33}	This pin is multiplexed between McASP0 and GPIO. For McASP0, it is McASP0 mute input AMUTEIN0 (I).
AMUTE0/GP[110]	G3	H3	I/O/Z	IPD DV_{DD33}	This pin is multiplexed between McASP0 and GPIO. For McASP0, it is McASP0 mute output AMUTE0 (O/Z).
ACLKR0/CLKX0/ GP[99]	H1	J1	I/O/Z	IPD DV_{DD33}	This pin is multiplexed between McASP0, McBSP0, and GPIO. For McASP0, it is McASP0 receive bit clock ACLKR0 (I/O/Z).
AHCLKR0/CLKR0/ GP[101]	J2	K1	I/O/Z	IPD DV_{DD33}	This pin is multiplexed between McASP0, McBSP0, and GPIO. For McASP0, it is McASP0 receive high-frequency master clock AHCLKR0 (I/O/Z).
ACLKX0/GP[106]	F1	G1	I/O/Z	IPD DV_{DD33}	This pin is multiplexed between McASP0 and GPIO. For McASP0, it is McASP0 transmit bit clock ACLKX0 (I/O/Z).
AHCLKX0/GP[108]	G1	H1	I/O/Z	IPD DV_{DD33}	This pin is multiplexed between McASP0 and GPIO. For McASP0, it is McASP0 transmit high-frequency master clock AHCLKX0 (I/O/Z).
AFSR0/DR0/ GP[100]	H4	K3	I/O/Z	IPD DV_{DD33}	This pin is multiplexed between McASP0, McBSP0, and GPIO. For McASP0, it is McASP0 receive frame synchronization AFSR0 (I/O/Z).
AFSX0/GP[107]	G2	G2	I/O/Z	IPD DV_{DD33}	This pin is multiplexed between McASP0 and GPIO. For McASP0, it is McASP0 transmit frame synchronization AFSX0 (I/O/Z).
AXR0[3]/FSR0/ GP[102]	G4	J3	I/O/Z	IPD DV_{DD33}	This pin is multiplexed between McASP0, McBSP0, and GPIO. For McASP0, it is McASP0 transmit/receive (TX/RX) data pin 3 AXR0[3] (I/O/Z).
AXR0[2]/FSX0/ GP[103]	H3	J2	I/O/Z	IPD DV_{DD33}	This pin is multiplexed between McASP0, McBSP0, and GPIO. For McASP0, it is McASP0 transmit/receive (TX/RX) data pin 2 AXR0[2] (I/O/Z).
AXR0[1]/DX0/ GP[104]	J3	K2	I/O/Z	IPD DV_{DD33}	This pin is multiplexed between McASP0, McBSP0, and GPIO. For McASP0, it is McASP0 transmit/receive (TX/RX) data pin 1 AXR0[1] (I/O/Z).
AXR0[0]/GP[105]	H2	H2	I/O/Z	IPD DV_{DD33}	This pin is multiplexed between McASP0 and GPIO. For McASP0, it is McASP0 transmit/receive (TX/RX) data pin 0 AXR0[0] (I/O/Z).

(1) I = Input, O = Output, Z = High impedance, S = Supply voltage, GND = Ground, A = Analog signal
(2) IPD = Internal pulldown, IPU = Internal pullup. For more detailed information on pullup/pulldown resistors and situations where external pullup/pulldown resistors are required, see Section 3.9.1, *Pullup/Pulldown Resistors*.
(3) Specifies the operating I/O supply voltage for each signal

Table 2-20. High-End Controller Area Network (HECC)

SIGNAL			TYPE(1)	OTHER(2)(3)	DESCRIPTION
NAME	ZWT NO.	ZDU NO.			
HECC					
HECC_RX/ TINP1L/ URXD1/ GP[56]	L4	P3	I/O/Z	IPU DV_{DD33}	This pin is multiplexed between HECC, Timer 1, UART1, and GPIO. For HECC, this pin is HECC receive serial data HECC_RX (**I**).
HECC_TX/ TOUT1L/ UTXD1/ GP[55]	K4	N3	I/O/Z	IPU DV_{DD33}	This pin is multiplexed between HECC, Timer 1, UART1, and GPIO. For HECC, this pin is HECC transmit serial data HECC_TX (**O/Z**).

(1) I = Input, O = Output, Z = High impedance, S = Supply voltage, GND = Ground, A = Analog signal
(2) IPD = Internal pulldown, IPU = Internal pullup. For more detailed information on pullup/pulldown resistors and situations where external pullup/pulldown resistors are required, see Section 3.9.1, *Pullup/Pulldown Resistors*.
(3) Specifies the operating I/O supply voltage for each signal

Table 2-21. UART0 and UART1 Terminal Functions

SIGNAL			TYPE (1)	OTHER (2) (3)	DESCRIPTION
NAME	ZWT NO.	ZDU NO.			
UART1					
HECC_RX/ TINP1L/ URXD1/ GP[56]	L4	P3	I/O/Z	IPU DV_{DD33}	This pin is multiplexed between the HECC, Timer 1, UART1 (Data), and GPIO. Fo UART1 this pin is the receive data input URXD1.
HECC_TX/ TOUT1L/ UTXD1/ GP[55]	K4	N3	I/O/Z	IPU DV_{DD33}	This pin is multiplexed between the HECC, Timer 1, UART1 (Data), and GPIO. Fo UART1 this pin is the transmit data output UTXD1.
UART0					
URXD0/ GP[85]	L2	M2	I/O/Z	IPU DV_{DD33}	This pin is multiplexed between UART0 (Data) and GPIO. When used by UART0 this pin is the receive data input URXD0.
UTXD0/ GP[86]	K3	N1	I/O/Z	IPU DV_{DD33}	This pin is multiplexed between UART0 (Data) and GPIO. In UART0 mode, this pin is the transmit data output UTXD0.
UCTS0 GP[87]	L1	P1	I/O/Z	IPU DV_{DD33}	This pin is multiplexed between the UART0 (Flow Control) and GPIO. In UART0 mode, this pin is the clear to send input UCTS0.
URTS0 PWM0 GP[88]	L3	M3	I/O/Z	IPU DV_{DD33}	This pin is multiplexed between the UART0 (Flow Control), PWM0, and GPIO. In UART0 mode, this pin is the ready to send output URTS0.

(1) I = Input, O = Output, Z = High impedance, S = Supply voltage, GND = Ground, A = Analog signal
(2) IPD = Internal pulldown, IPU = Internal pullup. For more detailed information on pullup/pulldown resistors and situations where external pullup/pulldown resistors are required, see Section 3.9.1, *Pullup/Pulldown Resistors*.
(3) Specifies the operating I/O supply voltage for each signal

Table 2-22. PWM0, PWM1, and PWM2 Terminal Functions

SIGNAL			TYPE(1)	OTHER(2)(3)	DESCRIPTION
NAME	ZWT NO.	ZDU NO.			
PWM2					
CLKOUT0/PWM2/ GP[84]	M1	R1	I/O/Z	IPD DV_{DD33}	This pin is multiplexed between the System Clock generator (PLL1), PWM2, and GPIO. For PWM2, this pin is output PWM2.
PWM1					
GP[4]/PWM1	F3	F3	I/O/Z	IPD DV_{DD33}	This pin is multiplexed between GPIO and PWM1. For PWM1, this pin is output PWM1.
PWM0					
URTS0/PWM0/ GP[88]	L3	M3	I/O/Z	IPU DV_{DD33}	This pin is multiplexed between the UART0 (Flow Control), PWM0, and GPIO. For PWM0, this pin is output PWM0.

(1) I = Input, O = Output, Z = High impedance, S = Supply voltage, GND = Ground, A = Analog signal
(2) IPD = Internal pulldown, IPU = Internal pullup. For more detailed information on pullup/pulldown resistors and situations where external pullup/pulldown resistors are required, see Section 3.9.1, *Pullup/Pulldown Resistors*.
(3) Specifies the operating I/O supply voltage for each signal

Table 2-23. Timer 0, Timer 1, and Timer 2 Terminal Functions

SIGNAL			TYPE(1)	OTHER(2)(3)	DESCRIPTION
NAME	ZWT NO.	ZDU NO.			
Timer 2					
No external pins. The Timer 2 (watchdog) peripheral pins are not pinned out as external pins.					
Timer 1					
HECC_RX/ TINP1L/ URXD1/ GP[56]	L4	P3	I/O/Z	IPU DV_{DD33}	This pin is multiplexed between the HECC, Timer 1, UART1 (Data), and GPIO. For Timer 1, this pin is the timer 1 input pin for the lower 32-bit counter
HECC_TX/ TOUT1L/ UTXD1/ GP[55]	K4	N3	I/O/Z	IPU DV_{DD33}	This pin is multiplexed between the HECC, Timer 1, UART1, and GPIO. For Timer 1, this pin is the timer 1 output pin for the lower 32-bit counter
Timer 0					
TINP0L/ GP[98]	K2	L2	I/O/Z	IPD DV_{DD33}	This pin is multiplexed between the Timer 0 and GPIO. For Timer 0, this pin is the timer 0 input pin for the lower 32-bit counter
CLKS0/ TOUT0L/ GP[97]	J4	L3	I/O/Z	IPD DV_{DD33}	This pin is multiplexed between the McBSP0, Timer 0, and GPIO. For Timer 0, this pin is the timer 0 output pin for the lower 32-bit counter

(1) I = Input, O = Output, Z = High impedance, S = Supply voltage, GND = Ground, A = Analog signal
(2) IPD = Internal pulldown, IPU = Internal pullup. For more detailed information on pullup/pulldown resistors and situations where external pullup/pulldown resistors are required, see Section 3.9.1, *Pullup/Pulldown Resistors*.
(3) Specifies the operating I/O supply voltage for each signal

Table 2-24. GPIO Terminal Functions

SIGNAL			TYPE(1)	OTHER(2)(3)	DESCRIPTION
NAME	ZWT NO.	ZDU NO.			
GPIO					
97 out of 111 GPIO pins on the DM6435 device are multiplexed with other peripherals pin functions (e.g., VPFE, HPI, VLYNQ, EMAC/MDIO, McASP0, McBSP0, Timer 0, Timer 1, UART0, UART1, PWM0, PWM1, PWM2, EMIFA, and the CLKOUT0 pin), see the peripheral-specific Terminal Functions tables for the GPIO multiplexing.					

(1) I = Input, O = Output, Z = High impedance, S = Supply voltage, GND = Ground, A = Analog signal
(2) IPD = Internal pulldown, IPU = Internal pullup. For more detailed information on pullup/pulldown resistors and situations where external pullup/pulldown resistors are required, see Section 3.9.1, *Pullup/Pulldown Resistors*.
(3) Specifies the operating I/O supply voltage for each signal

Table 2-25. Standalone GPIO 3.3 V Terminal Functions

SIGNAL			TYPE (1)	OTHER (2) (3)	DESCRIPTION
NAME	ZWT NO.	ZDU NO.			
Standalone GPIO 3.3 V					
GP[0]	E1	E1	I/O/Z	IPD DV_{DD33}	This pin functions as standalone GPIO pin 0.
GP[1]	E2	E2	I/O/Z	IPD DV_{DD33}	This pin functions as standalone GPIO pin 1.
GP[2]	E3	F1	I/O/Z	IPD DV_{DD33}	This pin functions as standalone GPIO pin 2.
GP[3]	E4	F2	I/O/Z	IPD DV_{DD33}	This pin functions as standalone GPIO pin 3.
GP[22]/ (BOOTMODE0)	F18	J20	I/O/Z	IPD DV_{DD33}	These pins function as boot configuration pins during device reset. After device reset, these pins function as standalone GPIO.
GP[23]/ (BOOTMODE1)	F15	K20	I/O/Z	IPD DV_{DD33}	
GP[24]/ (BOOTMODE2)	G15	L20	I/O/Z	IPD DV_{DD33}	
GP[25]/ (BOOTMODE3)	G16	H21	I/O/Z	IPD DV_{DD33}	
GP[26]/ (FASTBOOT)	G17	K19	I/O/Z	IPD DV_{DD33}	
GP[27]	H17	L19	I/O/Z	IPU DV_{DD33}	For proper DM6435 device operation, this pin ***must*** be pulled up via an external resistor. After device reset, this pin functions as standalone GPIO pin 27.
GP[28]	H16	J21	I/O/Z	IPD DV_{DD33}	For proper DM6435 device operation, this pin ***must*** be pulled down via an external resistor. After device reset, this pin functions as standalone GPIO pin 28.
GP[29]	H15	K21	I/O/Z	IPD DV_{DD33}	This pin functions as standalone GPIO pin 29.
GP[30]	G19	K22	I/O/Z	IPD DV_{DD33}	This pin functions as standalone GPIO pin 30.
GP[31]	D19	G22	I/O/Z	IPD DV_{DD33}	This pin functions as standalone GPIO pin 31.

(1) I = Input, O = Output, Z = High impedance, S = Supply voltage, GND = Ground, A = Analog signal
(2) IPD = Internal pulldown, IPU = Internal pullup. For more detailed information on pullup/pulldown resistors and situations where external pullup/pulldown resistors are required, see Section 3.9.1, *Pullup/Pulldown Resistors*.
(3) Specifies the operating I/O supply voltage for each signal

Table 2-26. Reserved Terminal Functions

SIGNAL			TYPE(1)	OTHER(2)(3)	DESCRIPTION
NAME	ZWT NO.	ZDU NO.			
RESERVED					
RSV1	E5	D4			Reserved. (Leave unconnected, do not connect to power or ground)
RSV2	K5	L4			Reserved. (Leave unconnected, do not connect to power or ground)
RSV3	L5	M4			Reserved. (Leave unconnected, do not connect to power or ground)
RSV4	L15	P19			Reserved. (Leave unconnected, do not connect to power or ground)
RSV5	R13	W16			Reserved. (Leave unconnected, do not connect to power or ground)
RSV6	N19	V22			Reserved. This pin **must** be tied directly to V_{SS} for normal device operation.
RSV7	P19	V21			Reserved. (Leave unconnected, do not connect to power or ground)
RSV8	P18	U22			Reserved. (Leave unconnected, do not connect to power or ground)
RSV9	N18	T21			Reserved. (Leave unconnected, do not connect to power or ground)
RSV10	N17	T22			Reserved. (Leave unconnected, do not connect to power or ground)
RSV11	P16	U20			Reserved. This pin **must** be tied directly to V_{SS} for normal device operation.
RSV12	P17	V20			Reserved. This pin **must** be tied directly to V_{SS} for normal device operation.
RSV13	N15	T20			Reserved. This pin **must** be tied directly to V_{SS} for normal device operation.
RSV14	P15	T19			Reserved. This pin **must** be tied directly to V_{SS} for normal device operation.
RSV15	N16	U21			Reserved. This pin **must** be tied directly to V_{SS} for normal device operation.
RSV16	T3	W3	I	IPD DV_{DD33}	Reserved. For proper DM6435 device operation, this pin ***must*** be pulled down via an external resistor and tied to V_{SS}.
RSV17	E10	D12	I/O/Z	IPD DV_{DD33}	Reserved. (Leave unconnected, do not connect to power or ground)
RSV18	E11	D13	I/O/Z	IPD DV_{DD33}	Reserved. (Leave unconnected, do not connect to power or ground)
RSV19	E12	D14	I/O/Z	IPD DV_{DD33}	Reserved. (Leave unconnected, do not connect to power or ground)

(1) I = Input, O = Output, Z = High impedance, S = Supply voltage, GND = Ground, A = Analog signal
(2) IPD = Internal pulldown, IPU = Internal pullup. For more detailed information on pullup/pulldown resistors and situations where external pullup/pulldown resistors are required, see Section 3.9.1, *Pullup/Pulldown Resistors*.
(3) Specifies the operating I/O supply voltage for each signal

Table 2-27. Supply Terminal Functions

SIGNAL			TYPE[1]	OTHER	DESCRIPTION
NAME	ZWT NO.	ZDU NO.			
SUPPLY VOLTAGE PINS					
DV_{DD33}	A1	A2	S		3.3 V I/O supply voltage (see the Power-Supply Decoupling section of this data manual)
	A2	A21			
	A18	B1			
	E6	D6			
	E8	D8			
	F5	D10			
	F7	D16			
	F9	D18			
	F11	E3			
	F13	E5			
	G6	E7			
	G8	E9			
	G10	E11			
	G12	E13			
	G14	E15			
	H5	E17			
	H18	E19			
	J1	F4			
	J6	F18			
	J14	G5			
	J16	G19			
	K15	H4			
	K17	H18			
	L6	J5			
	M5	J19			
	M15	K4			
	N6	K18			
	P1	L1			
		L5			
		L21			
		M18			
		M20			
		N5			
		N19			
		P4			
		P18			
		P20			
		P22			
		R5			
		T4			

(1) I = Input, O = Output, Z = High impedance, S = Supply voltage, GND = Ground, A = Analog signal

Table 2-27. Supply Terminal Functions (continued)

SIGNAL			TYPE[1]	OTHER	DESCRIPTION
NAME	ZWT NO.	ZDU NO.			
DV_{DDR2}	L14	U5	S		1.8 V DDR2 I/O supply voltage (see the Power-Supply Decoupling section of this data manual)
	P5	V1			
	P7	V4			
	P9	V6			
	P11	V8			
	P13	V10			
	R4	V12			
	R6	V14			
	R8	V16			
	R10	V18			
	R12	W7			
	R14	W9			
	R16	W11			
	T5	W17			
	V1	W19			
	W18	AA1			
	W19	AB21			
		AB22			
CV_{DD}	H7	J10	S		1.20 V supply voltage (-7/-6/-5/-4/-L/-Q6/-Q5/-Q4 devices) 1.05 V core supply voltage (-7/-6/-5/-4/-L/-Q5 devices) (see the Power-Supply Decoupling section of this data manual)
	H9	J11			
	H11	J12			
	H13	J13			
	J8	K9			
	J10	K14			
	J12	L9			
	K7	L13			
	K9	L14			
	K11	M9			
	K13	M10			
	L8	M14			
	L10	N9			
	L12	N14			
	M7	P10			
	M9	P11			
	M11	P12			
	M13	P13			
	N8				
	N10				
	N12				

Table 2-28. Ground Terminal Functions

SIGNAL			TYPE[1]	OTHER	DESCRIPTION
NAME	ZWT NO.	ZDU NO.			
GROUND PINS					
V_{SS}	A19	A1	GND		Ground pins
	B1	A22			
	B19	B22			
	E7	D5			
	E9	D7			
	E13	D9			
	F4	D11			
	F6	D15			
	F8	D17			
	F10	E4			
	F12	E6			
	F14	E8			
	G5	E10			
	G7	E12			
	G9	E14			
	G11	E16			
	G13	E18			
	G18	F5			
	H6	F19			
	H8	G4			
	H10	G18			
	H12	H5			
	H14	H19			
	H19	J4			
	J5	J9			
	J7	J14			
	J9	J18			
	J11	K5			
	J13	K10			
	J15	K11			
	J17	K12			
	J18	K13			
	K1	L10			
	K6	L11			
	K8	L12			
	K10	L18			
	K12	L22			
	K14	M1			
	K16	M5			

(1) I = Input, O = Output, Z = High impedance, S = Supply voltage, GND = Ground, A = Analog signal

Table 2-28. Ground Terminal Functions (continued)

SIGNAL			TYPE[1]	OTHER	DESCRIPTION
NAME	ZWT NO.	ZDU NO.			
	L7	M11			
	L9	M12			
	L11	M13			
	L13	M19			
	L17	N4			
	L19	N10			
	M6	N11			
	M8	N12			
	M10	N13			
	M12	N18			
	M14	P5			
	M16	P9			
	M17	P14			
	M18	P21			
	M19	R4			
	N5	R18			
	N7	R19			
	N9	R20			
	N11	R21			
	N13	R22			
	N14	T5			
V_{SS}	P6	T18	GND		Ground pins
	P8	U4			
	P10	U18			
	P12	U19			
	P14	V5			
	R1	V7			
	R5	V9			
	R7	V11			
	R9	V13			
	R11	V15			
	R15	V17			
	R17	V19			
	R18	W1			
	R19	W6			
	V19	W8			
	W1	W10			
	W2	W20			
		W21			
		W22			
		AA22			
		AB1			
		AB2			

2.7 Device Support

2.7.1 Development Support

TI offers an extensive line of development tools for the TMS320DM643x DMP platform, including tools to evaluate the performance of the processors, generate code, develop algorithm implementations, and fully integrate and debug software and hardware modules. The tool's support documentation is electronically available within the Code Composer Studio™ Integrated Development Environment (IDE).

The following products support development of TMS320DM643x DMP-based applications:

Software Development Tools:

Code Composer Studio™ Integrated Development Environment (IDE): including Editor

C/C++/Assembly Code Generation, and Debug plus additional development tools

Scalable, Real-Time Foundation Software (DSP/BIOS™), which provides the basic run-time target software needed to support any SoC application.

Hardware Development Tools:

Extended Development System (XDS™) Emulator (supports TMS320DM643x DMP multiprocessor system debug) EVM (Evaluation Module)

For a complete listing of development-support tools for the TMS320DM643x DMP platform, visit the Texas Instruments web site on the Worldwide Web at http://www.ti.com uniform resource locator (URL). For information on pricing and availability, contact the nearest TI field sales office or authorized distributor.

2.8 Device and Development-Support Tool Nomenclature

To designate the stages in the product development cycle, TI assigns prefixes to the part numbers of all DSP devices and support tools. Each DSP commercial family member has one of three prefixes: TMX, TMP, or TMS (e.g., **TMX320DM6435ZWT400**). Texas Instruments recommends two of three possible prefix designators for its support tools: TMDX and TMDS. These prefixes represent evolutionary stages of product development from engineering prototypes (TMX/TMDX) through fully qualified production devices/tools (TMS/TMDS).

Device development evolutionary flow:

TMX Experimental device that is not necessarily representative of the final device's electrical specifications.

TMP Final silicon die that conforms to the device's electrical specifications but has not completed quality and reliability verification.

TMS Fully-qualified production device.

Support tool development evolutionary flow:

TMDX Development-support product that has not yet completed Texas Instruments internal qualification testing.

TMDS Fully qualified development-support product.

TMX and TMP devices and TMDX development-support tools are shipped against the following disclaimer:

"Developmental product is intended for internal evaluation purposes."

TMS devices and TMDS development-support tools have been characterized fully, and the quality and reliability of the device have been demonstrated fully. TI's standard warranty applies.

Predictions show that prototype devices (TMX or TMP) have a greater failure rate than the standard production devices. Texas Instruments recommends that these devices not be used in any production system because their expected end-use failure rate still is undefined. Only qualified production devices are to be used.

TI device nomenclature also includes a suffix with the device family name. This suffix indicates the package type (for example, ZWT), the temperature range (for example, "Blank" is the commercial temperature range), and the device speed range in megahertz (for example, "6" indicates [600-MHz]).

Figure 2-10 provides a legend for reading the complete device name for any TMS320DM643x DMP platform member.

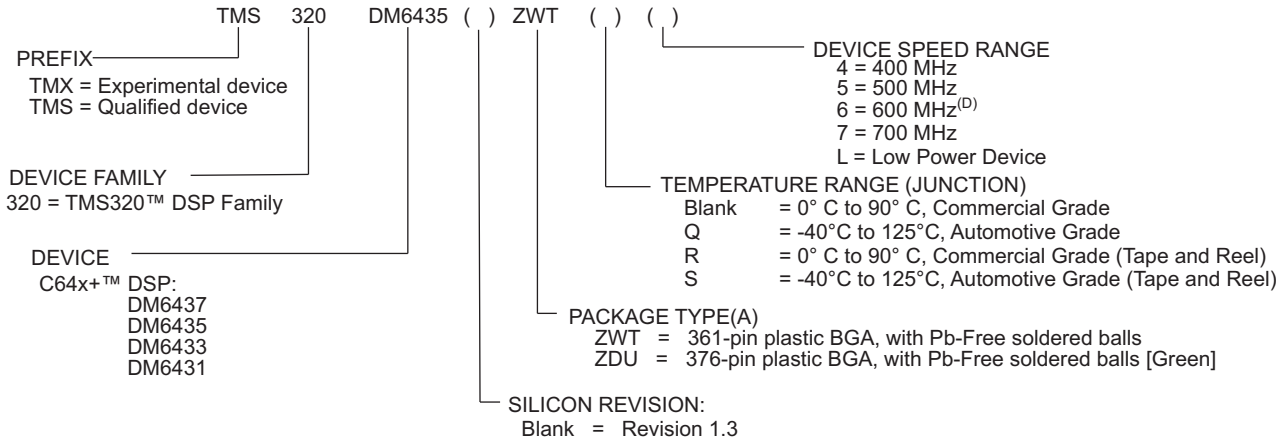

A. BGA = Ball Grid Array
B. For “TMX” initial devices, the device number is DM6437.
C. Not all combinations are available. For more information, see the *Orderable Devices* table in the Packing Information section.
D. The maximum CPU frequency for the -Q6 device is 660 MHz. See the *PLL1 and PLL2* section for maximum operating frequencies of the PLL1 controller.
E. The device speed range symbolization indicates the maximum CPU frequency when the core voltage (CV_{DD}) is set to 1.2 V. To determine the maximum CPU frequency the core voltage is set to 1.05 V, refer to the *PLL1 and PLL2* section.

Figure 2-10. Device Nomenclature

2.9 Documentation Support

2.9.1 Related Documentation From Texas Instruments

The following documents describe the TMS320DM643x Digital Media Processor (DMP). Copies of these documents are available on the Internet at www.ti.com. *Tip:* Enter the literature number in the search box provided at www.ti.com.

The current documentation that describes the DM643x DMP, related peripherals, and other technical collateral, is available in the C6000 DSP product folder at: www.ti.com/c6000.

SPRU978 ***TMS320DM643x DMP DSP Subsystem Reference Guide.*** Describes the digital signal processor (DSP) subsystem in the TMS320DM643x Digital Media Processor (DMP).

SPRU983 ***TMS320DM643x DMP Peripherals Overview Reference Guide.*** Provides an overview and briefly describes the peripherals available on the TMS320DM643x Digital Media Processor (DMP).

SPRAA84 ***TMS320C64x to TMS320C64x+ CPU Migration Guide.*** Describes migrating from the Texas Instruments TMS320C64x digital signal processor (DSP) to the TMS320C64x+ DSP. The objective of this document is to indicate differences between the two cores. Functionality in the devices that is identical is not included.

SPRU732 ***TMS320C64x/C64x+ DSP CPU and Instruction Set Reference Guide.*** Describes the CPU architecture, pipeline, instruction set, and interrupts for the TMS320C64x and TMS320C64x+ digital signal processors (DSPs) of the TMS320C6000 DSP family. The C64x/C64x+ DSP generation comprises fixed-point devices in the C6000 DSP platform. The C64x+ DSP is an enhancement of the C64x DSP with added functionality and an expanded instruction set.

SPRU871 ***TMS320C64x+ DSP Megamodule Reference Guide.*** Describes the TMS320C64x+ digital signal processor (DSP) megamodule. Included is a discussion on the internal direct memory access (IDMA) controller, the interrupt controller, the power-down controller, memory protection, bandwidth management, and the memory and cache.

3 Device Configuration

3.1 System Module Registers

The system module includes status and control registers required for configuration of the device. Brief descriptions of the various registers are shown in Table 3-1. System Module registers required for device configurations are discussed in the following sections.

Table 3-1. System Module Register Memory Map

HEX ADDRESS RANGE	REGISTER ACRONYM	DESCRIPTION
0x01C4 0000	PINMUX0	Pin Multiplexing Control 0 (see Section 3.7.2.1, *PINMUX0 Register Description*).
0x01C4 0004	PINMUX1	Pin Multiplexing Control 1 (see Section 3.7.2.2, *PINMUX1 Register Description*).
0x01C4 0008	DSPBOOTADDR	DSP Boot Address (see Section 3.4.2.3, *DSPBOOTADDR Register*).
0x01C4 000C	BOOTCOMPLT	Boot Complete (see Section 3.4.2.2, *BOOTCMPLT Register*).
0x01C4 0010	–	Reserved
0x01C4 0014	BOOTCFG	Device Boot Configuration (see Section 3.4.2.1, *BOOTCFG Register*).
0x01C4 0018 - 0x01C4 0027	–	Reserved
0x01C4 0028	JTAGID	JTAG ID (see Section 6.23.1, *JTAG ID (JTAGID) Register Description(s)*).
0x01C4 002C	–	Reserved
0x01C4 0030	HPICTL	HPI Control (see Section 3.6.2.1, *HPI Control Register*).
0x01C4 0034	–	Reserved
0x01C4 0038	–	Reserved
0x01C4 003C	MSTPRI0	Bus Master Priority Control 0 (see Section 3.6.1, *Switch Central Resource (SCR) Bus Priorities*).
0x01C4 0040	MSTPRI1	Bus Master Priority Control 1 (see Section 3.6.1, *Switch Central Resource (SCR) Bus Priorities*).
0x01C4 0044	VPSS_CLKCTL	VPSS Clock Control (see Section 3.3.2, *VPSS Clocks*).
0x01C4 0048	VDD3P3V_PWDN	V_{DD} 3.3-V I/O Powerdown Control (see Section 3.2, *Power Considerations*).
0x01C4 004C	DDRVTPER	DDR2 VTP Enable Register (see Section 6.9.4, *DDR2 Memory Controller*).
0x01C4 0050 - 0x01C4 0080	–	Reserved
0x01C4 0084	TIMERCTL	Timer Control (see Section 3.6.2.2, *Timer Control Register*).
0x01C4 0088	EDMATCCFG	EDMA Transfer Controller Default Burst Size Configuration (see Section 3.6.2.3, *EDMA TC Configuration Register*).
0x01C4 008C	–	Reserved

3.2 Power Considerations

The DM6435 provides several means of managing power consumption.

As described in the Section 6.3.4, *DM6435 Power and Clock Domains*, the DM6435 has one single power domain—the "Always On" power domain. Within this power domain, the DM6435 utilizes local clock gating via the Power and Sleep Controller (PSC) to achieve power savings. For more details on the PSC, see Section 6.3.5, *Power and Sleep Controller (PSC)* and the *TMS320DM643x DMP DSP Subsystem* Reference Guide (literature number SPRU978).

Some of the DM6435 peripherals support additional power saving features. For more details on power saving features supported, see the *TMS320DM643x DMP Peripherals Overview* Reference Guide (literature number SPRU983).

Most DM6435 3.3-V I/Os can be powered-down to reduce power consumption. The VDD3P3V_PWDN register in the System Module (see Figure 3-1) is used to selectively power down unused 3.3-V I/O pins. For independent control, the 3.3-V I/Os are separated into functional groups—most of which are named according to the pin multiplexing groups (see Table 3-2). For these I/O groups, only the I/O buffers needed for Host/EMIFA Boot or Power-Up Operations are powered up by default (CLKOUT Block, EMIFA/VPSS Block, Host Block, and GPIO Block).

Note: To save power, all other I/O buffers are powered down by default. Before using these pins, the user ***must*** program the VDD3P3V_PWDN register to power up the corresponding I/O buffers.

For a list of multiplexed pins on the device and the pin mux group each pin belongs to, see Section 3.7.3.1, *Multiplexed Pins on DM6435*.

31															16
RESERVED															
R-0000 0000 0000 0000															

15	14	13	12	11	10	9	8	7	6	5	4	3	2	1	0
RESERVED		RSV	EMBK3	UR0FC	UR0DAT	TIMER1	TIMER0	SP	PWM1	GPIO	HOST	EMBK2	EMBK1	EMBK0	CLKOUT
R-00		R/W-0	R/W-0	R/W-1	R/W-1	R/W-1	R/W-1	R/W-1	R/W-1	R/W-0	R/W-0	R/W-0	R/W-0	R/W-0	R/W-0

LEGEND: R/W = Read/Write; R = Read only; -*n* = value after reset

Figure 3-1. VDD3P3V_PWDN Register

Table 3-2. VDD3P3V_PWDN Register Bit Descriptions(1)

BIT	NAME	DESCRIPTION
31:14	RESERVED	Reserved. Read-only, writes have no effect.
13	RSV	Reserved. This bit should be programmed to 1 during device initialization (see Section 3.8, *Device Initialization Sequence After Reset*).
12	EMBK3	EMIFA/VPSS Sub-Block 3 I/O Power Down Control. Controls the power of the 8 I/O pins in the EMIFA/VPSS Sub-Block 3. 0 = I/O pins powered up [**default**]. 1 = I/O pins powered down and ***not*** operational. Outputs are 3-stated (**Hi-Z**).
11	UR0FC	UART0 Flow Control Block I/O Power Down Control. Controls the power of the 2 I/O pins in the UART0 Flow Control Block. 0 = I/O pins powered up. 1 = I/O pins powered down and ***not*** operational. Outputs are 3-stated (**Hi-Z**) [**default**].

(1) For more details on I/O pins belonging to each pin mux block, see Section 3.7, *Multiplexed Pin Configurations*.

Table 3-2. VDD3P3V_PWDN Register Bit Descriptions (continued)

BIT	NAME	DESCRIPTION
10	UR0DAT	UART0 Data Block I/O Power Down Control. Controls the power of the 2 I/O pins in the UART0 Data Block. 0 = I/O pins powered up. 1 = I/O pins powered down and ***not*** operational. Outputs are 3-stated (**Hi-Z**) [**default**].
9	TIMER1	Timer1 Block I/O Power Down Control. Controls the power of the 2 I/O pins in the Timer1 Block. 0 = I/O pins powered up. 1 = I/O pins powered down and ***not*** operational. Outputs are 3-stated (**Hi-Z**) [**default**].
8	TIMER0	Timer0 Block I/O Power Down Control. Controls the power of the 2 I/O pins in the Timer0 Block. 0 = I/O pins powered up. 1 = I/O pins powered down and ***not*** operational. Outputs are 3-stated (**Hi-Z**) [**default**].
7	SP	Serial Port Block I/O Power Down Control. Controls the power of the 12 I/O pins in the Serial Port Block (Serial Port Sub-Block 0 and Serial Port Sub-Block 1). 0 = I/O pins powered up. 1 = I/O pins powered down and ***not*** operational. Outputs are 3-stated (**Hi-Z**) [**default**].
6	PWM1	PWM1 Block I/O Power Down Control. Contros thel power of the 1 I/O pin in the PWM1 Block. 0 = I/O pins powered up. 1 = I/O pins powered down and ***not*** operational. Outputs are 3-stated (**Hi-Z**) [**default**].
5	GPIO	GPIO Block I/O Power Down Control. Controls the power of the 4 I/O pins in the GPIO Block (GP[3:0]). **Note:** The GPIO Block contains standalone GPIO pins and is not a pin mux group. 0 = I/O pins powered up [**default**]. 1 = I/O pins powered down and ***not*** operational. Outputs are 3-stated (**Hi-Z**).
4	HOST	Host Block I/O Power Down Control. Controls the power of the 27 I/O pins in the Host Block. 0 = I/O pins powered up [**default**]. 1 = I/O pins powered down and ***not*** operational. Outputs are 3-stated (**Hi-Z**).
3	EMBK2	EMIFA/VPSS Sub-Block 2 I/O Power Down Control. Controls the power of the 3 I/O pins in the EMIFA/VPSS Sub-Block 2. 0 = I/O pins powered up [**default**]. 1 = I/O pins powered down and ***not*** operational. Outputs are 3-stated (**Hi-Z**).
2	EMBK1	EMIFA/VPSS Sub-Block 1 I/O Power Down Control. Controls the power of the 29 I/O pins in the EMIFA/VPSS Sub-Block 1. 0 = I/O pins powered up [**default**]. 1 = I/O pins powered down and ***not*** operational. Outputs are 3-stated (**Hi-Z**).
1	EMBK0	EMIFA/VPSS Sub-Block 0 I/O Power Down Control. Controls the power of the 21 I/O pins in the EMIFA/VPSS Sub-Block 0. 0 = I/O pins powered up [**default**]. 1 = I/O pins powered down and ***not*** operational. Outputs are 3-stated (**Hi-Z**).
0	CLKOUT	CLKOUT Block I/O Power Down Control. Controls the power of the 1 I/O pin in the CLKOUT Block. 0 = I/O pins powered up [**default**]. 1 = I/O pins powered down and ***not*** operational. Outputs are 3-stated (**Hi-Z**).

3.3 Clock Considerations

Global device and local peripheral clocks are controlled by the PLL Controllers (PLLC1 and PLLC2) and the Power and Sleep Controller (PSC). In addition, the System Module VPSS_CLKCTL register configures the clock source to the Video Processing Subsystem (VPSS).

3.3.1 Clock Configurations after Device Reset

After device reset, the user is responsible for programming the PLL Controllers (PLLC1 and PLLC2) and the Power and Sleep Controller (PSC) to bring the device up to the desired clock frequency and the desired peripheral clock state (clock gating *or* not).

For additional power savings, some of the DM6435 peripherals support clock gating within the peripheral boundary. For more details on clock gating and power saving features supported by a specific peripheral, see the peripheral-specific reference guides [listed/linked in the *TMS320DM643x DMP Peripherals Overview* Reference Guide (literature number SPRU983)].

3.3.1.1 Device Clock Frequency

The DM6435 defaults to PLL bypass mode. To bring the device up to the desired clock frequency, the user should program PLLC1 and PLLC2 after device reset.

DM6435 supports a FASTBOOT option, where upon exit from device reset the internal bootloader code automatically programs the PLLC1 into PLL mode with a specific PLL multiplier and divider to speed up device boot. While the FASTBOOT option is beneficial for faster boot, the PLL multiplier and divider selected for boot *may not* be the exact frequency desired for the run-time application. It is the user's responsibility to reconfigure PLLC1 after fastboot to bring the device into the desired clock frequency. Section 3.4.1, *Boot Modes* discusses the different fast boot modes in more detail.

The user ***must*** adhere to the various clock requirements when programming the PLLC1 and PLLC2:

- Fixed frequency ratio requirements between CLKDIV1, CLKDIV3, and CLKDIV6 clock domains. For more details on the frequency ratio requirements, see Section 6.3.4, *DM6435 Power and Clock Domains*.
- PLL multiplier and frequency ranges. For more details on PLL multiplier and frequency ranges, see Section 6.7.1, *PLL1 and PLL2*.

3.3.1.2 Module Clock State

The clock and reset state for each of the modules is controlled by the Power and Sleep Controller (PSC). Table 3-3 shows the default state of each module after a device-level global reset. The DM6435 device has four different module states—Enable, Disable, SyncReset, *or* SwRstDisable. For more information on the definitions of the module states, the PSC, and PSC programming, see Section 6.3.5, *Power and Sleep Controller (PSC)* and the *TMS320DM643x DMP DSP Subsystem* Reference Guide (literature number SPRU978).

Table 3-3. DM6435 Default Module States

LPSC #	MODULE NAME	DEFAULT MODULE STATE [PSC Register MDSTATn.STATE]
0	VPSS (Master)	SwRstDisable
1	VPSS (Slave)	SwRstDisable
2	EDMACC	SwRstDisable
3	EDMATC0	SwRstDisable
4	EDMATC1	SwRstDisable
5	EDMATC2	SwRstDisable
6	EMAC Memory Controller	SwRstDisable
7	MDIO	SwRstDisable
8	EMAC	SwRstDisable
9	McASP0	SwRstDisable
11	VLYNQ	SwRstDisable
12	HPI	SwRstDisable
13	DDR2 Memory Contoller	SwRstDisable
14	EMIFA	SwRstDisable, if configuration pins AEM[2:0] = 000b Enable, if configuration pins AEM[2:0] = Others [001b and 101b]
16	McBSP0	SwRstDisable
18	I2C	SwRstDisable
19	UART0	SwRstDisable
20	UART1	SwRstDisable
22	HECC	SwRstDisable
23	PWM0	SwRstDisable
24	PWM1	SwRstDisable
25	PWM2	SwRstDisable
26	GPIO	SwRstDisable
27	TIMER0	SwRstDisable
28	TIMER1	SwRstDisable
39	C64x+ CPU	Enable

3.3.2 VPSS Clocks

The Video Processing SubSystem (VPSS) clocks are controlled via the VPSS_CLKCTL register. The VPSS_CLKCTL register format is shown in Figure 3-2 and the bit field descriptions are given in Table 3-4.

31															16
RESERVED															
R-0000 0000 0000 0000															

15														5	4	3	2	1	0
RESERVED															RESERVED		PCLK INV	RESERVED	
R-0000 0000 000															R/W-00		R/W-0	R/W-00	

LEGEND: R = Read; W = Write; -*n* = value after reset

Figure 3-2. VPSS_CLKCTL Register

Table 3-4. VPSS_CLKCTL Register Bit Description

BIT	NAME	DESCRIPTION
31:5	RESERVED	Reserved. Read-only, writes have no effect.
4:3	RESERVED	Reserved. For proper device operation, the user ***must*** *only* write "0" to these bits.
2	PCLKINV	PCLK polarity 0 = VPSS receives normal PCLK [**default**]. 1 = VPSS receives inverted PCLK.
1:0	RESERVED	Reserved. For proper device operation, the user ***must*** *only* write "0" to these bits.

3.4 Boot Sequence

The boot sequence is a process by which the device's memory is loaded with program and data sections, and by which some of the device's internal registers are programmed with predetermined values. The boot sequence is started automatically after each device-level global reset. For more details on device-level global resets, see Section 6.5, *Reset*.

There are several methods by which the memory and register initialization can take place. Each of these methods is referred to as a boot mode. The boot mode to be used is selected at reset. For more information on the bootmode selections, see Section 3.4.1, *Boot Modes*.

The device is booted through multiple means—primary bootloaders within internal ROM or EMIFA, and secondary user bootloaders from peripherals or external memories. Boot modes, pin configurations, and register configurations required for booting the device, are described in the following subsections.

3.4.1 Boot Modes

The DM6435 boot modes are determined by these device boot and configuration pins. For information on how these pins are sampled at device reset, see Section 6.5.1.2, *Latching Boot and Configuration Pins*.

- BOOTMODE[3:0]
- FASTBOOT
- AEM[2:0]
- PLLMS[2:0]

Note: the PLLMS[2:0] configuration pins are actually multiplexed with the AEAW[2:0] configuration pins. For more details on the multiplexed AEAW[2:0]/PLLMS[2:0] configuration pins and control, see Section 3.5.1.2, *EMIFA Address Width Selects (AEAW[2:0]) and FASTBOOT PLL Multiplier Selects (PLLMS[2:0])*.

BOOTMODE[3:0] determines the type of boot (e.g., I2C Boot, EMIFA Boot, or HPI Boot, etc.). FASTBOOT determines if the PLL is enabled during boot to speed up the boot process.

The combination of AEM[2:0] and PLLMS[2:0] is used by bootloader code to determine the PLL multiplier used during fastboot modes (FASTBOOT = 1).

The DM6435 boot modes are grouped into three categories—Non-Fastboot Modes, Fixed-Multiplier Fastboot Modes, and User-Select Multiplier Fastboot Modes.

- **Non-Fastboot Modes (FASTBOOT = 0):** The device operates in default PLL bypass mode during boot. The Non-Fastboot bootmodes available on the DM6435 are shown in Table 3-5.
- **Fixed-Multiplier Fastboot Modes (FASTBOOT = 1, AEM[2:0] = 001b):** The bootloader code speeds up the device during boot according to the fixed PLL multipliers. The Fixed-Multiplier Fastboot bootmodes available on the DM6435 are shown in Table 3-6.

  Note: The PLLMS[2:0] configurations have ***no*** effect on the Fixed-Multiplier Fastboot Modes, as these pins function as AEAW[2:0] to select the EMIFA address width when AEM[2:0] = 001b.
- **User-Select Multiplier Fastboot Modes (FASTBOOT = 1, AEM[2:0] = 000b and 101b):** The bootloader code speeds up the device during boot. The PLL multiplier is selected by the user via the PLLMS[2:0] pins. The User-Select Multiplier Fastboot bootmodes available on the DM6435 are shown in Table 3-7.

All other modes ***not*** shown in these tables are reserved and invalid settings.

For more information on how these pins are sampled at device reset, see Section 6.5.1.2, *Latching Boot and Configuration Pins*.

Table 3-5. Non-Fastboot Modes (FASTBOOT = 0)

DEVICE BOOT AND CONFIGURATION PINS	BOOT DESCRIPTION[1]	DM6435 DMP (Master/Slave)	PLLC1 CLOCK SETTING AT BOOT			DSPBOOTADDR (DEFAULT)[1]
BOOTMODE[3:0]			PLL MODE[2]	CLKDIV1 DOMAIN (SYSCLK1 DIVIDER)	DEVICE FREQUENCY (SYSCLK1)	
0000	No Boot (Emulation Boot)	Master	Bypass	/1	CLKIN	0x0010 0000
0001	Reserved	–	–	–	–	–
0010	HPI Boot	Slave	Bypass	/1	CLKIN	0x0010 0000
0011	Reserved	–	–	–	–	–
0100	EMIFA ROM Direct Boot [PLL Bypass Mode]	Master	Bypass	/1	CLKIN	0x4200 000
0101	I2C Boot [STANDARD MODE][3]	Master	Bypass	/1	CLKIN	0x0010 0000
0110	16-bit SPI Boot [McBSP0]	Master	Bypass	/1	CLKIN	0x0010 0000
0111	NAND Flash Boot	Master	Bypass	/1	CLKIN	0x0010 0000
1000	UART Boot without Hardware Flow Control [UART0]	Master	Bypass	/1	CLKIN	0x0010 0000
1001	Reserved	–	–	–	–	–
1010	VLYNQ Boot	Slave	Bypass	/1	CLKIN	0x0010 0000
1011	Reserved	–	–	–	–	–
1100	Reserved	–	–	–	–	–
1101	Reserved	–	–	–	–	–
1110	UART Boot with Hardware Flow Control [UART0]	Master	Bypass	/1	CLKIN	0x0010 0000
1111	24-bit SPI Boot (McBSP0 + GP[97])	Master	Bypass	/1	CLKIN	0x0010 0000

(1) For all boot modes that default to DSPBOOTADDR = 0x0010 0000 (i.e., all boot modes except the EMIFA ROM Direct Boot, BOOTMODE[3:0] = 0100, FASTBOOT = 0), the bootloader code disables all C64x+ cache (L2, L1P, and L1D) so that upon exit from the bootloader code, all C64x+ memories are configured as all RAM. If cache use is required, the application code must explicitly enable the cache. For more information on the bootloader, see the *Using the TMS320DM643x Bootloader* Application Report (literature number SPRAAG0).
(2) The PLL MODE for Non-Fastboot Modes is fixed as shown in this table; therefore, the PLLMS[2:0] configuration pins have no effect on the PLL MODE.
(3) I2C Boot (BOOTMODE[3:0] = 0101b) is *only* available if the MXI/CLKIN frequency is between 21 MHz to 30 MHz. I2C Boot is ***not*** available for MXI/CLKIN frequencies less than 21 MHz.

Table 3-6. Fixed-Multiplier Fastboot Modes (FASTBOOT = 1, AEM[2:0] = 001b)

DEVICE BOOT AND CONFIGURATION PINS	BOOT DESCRIPTION(1)	DM6435 DMP (Master/Slave)	PLLC1 CLOCK SETTING AT BOOT			DSPBOOTADDR (DEFAULT)(1)
BOOTMODE[3:0]			PLL MODE(2)	CLKDIV1 DOMAIN (SYSCLK1 DIVIDER)	DEVICE FREQUENCY (SYSCLK1)	
0000	No Boot (Emulation Boot)	Master	Bypass	/1	CLKIN	0x0010 0000
0001	HPI Boot with PLL Multiplier x27 at boot	Slave	x27	/2	CLKIN x27 / 2	0x0010 0000
0010	HPI Boot with PLL Multiplier x20 at boot	Slave	x20	/2	CLKIN x20 / 2	0x0010 0000
0011	HPI Boot with PLL Multiplier x15 at boot	Slave	x15	/2	CLKIN x15 / 2	0x0010 0000
0100	EMIFA ROM FASTBOOT with Application Image Script (AIS)	Master	x20	/2	CLKIN x20 / 2	0x0010 000
0101	I2C Boot [FAST MODE](3)	Master	x20	/2	CLKIN x20 / 2	0x0010 0000
0110	16-bit SPI Boot [McBSP0]	Master	x20	/2	CLKIN x20 / 2	0x0010 0000
0111	NAND Flash Boot	Master	x20	/2	CLKIN x20 / 2	0x0010 0000
1000	UART Boot without Hardware Flow Control [UART0]	Master	x20	/2	CLKIN x20 / 2	0x0010 0000
1001	EMIFA ROM FASTBOOT without AIS	Master	x20	/2	CLKIN x20 / 2	0x0010 0000
1010	VLYNQ Boot	Slave	x20	/2	CLKIN x20 / 2	0x0010 0000
1011	Reserved	–	–	–	–	–
1100	Reserved	–	–	–	–	–
1101	Reserved	–	–	–	–	–
1110	UART Boot with Hardware Flow Control [UART0]	Master	x20	/2	CLKIN x20 / 2	0x0010 0000
1111	24-bit SPI Boot (McBSP0 + GP[97])	Master	x20	/2	CLKIN x20 / 2	0x0010 0000

(1) For all boot modes that default to DSPBOOTADDR = 0x0010 0000, the bootloader code disables all C64x+ cache (L2, L1P, and L1D) so that upon exit from the bootloader code, all C64x+ memories are configured as all RAM. If cache use is required, the application code must explicitly enable the cache. For more information on the bootloader, see the *Using the TMS320DM643x Bootloader* Application Report (literature number SPRAAG0).
(2) The PLL MODE for Fixed-Multiplier Fastboot Modes is fixed as shown in this table; therefore, the PLLMS[2:0] configuration pins have no effect on the PLL MODE.
(3) I2C Boot (BOOTMODE[3:0] = 0101b) is *only* available if the MXI/CLKIN frequency is between 21 MHz to 30 MHz. I2C Boot is ***not*** available for MXI/CLKIN frequencies less than 21 MHz.

Table 3-7. User-Select Multiplier Fastboot Modes (FASTBOOT = 1, AEM[2:0] = 000b or 101b)

DEVICE BOOT AND CONFIGURATION PINS	BOOT DESCRIPTION(1)	DM6435 DMP (Master/Slave)	PLLC1 CLOCK SETTING AT BOOT			DSPBOOTADDR (DEFAULT)(1)
BOOTMODE[3:0]			PLL MODE(2)	CLKDIV1 DOMAIN (SYSCLK1 DIVIDER)	DEVICE FREQUENCY (SYSCLK1)	
0000	No Boot (Emulation Boot)	Master	Bypass	/1	CLKIN	0x0010 0000
0001	Reserved	–	–	–	–	–
0010	HPI Boot	Slave	Table 3-8	/2	Table 3-8	0x0010 0000
0011	Reserved	–	–	–	–	–
0100	EMIFA ROM FASTBOOT with AIS	Master	Table 3-8	/2	Table 3-8	0x0010 0000
0101	I2C Boot [FAST MODE](3)	Master	Table 3-8	/2	Table 3-8	0x0010 0000
0110	16-bit SPI Boot [McBSP0]	Master	Table 3-8	/2	Table 3-8	0x0010 0000
0111	NAND Flash Boot	Master	Table 3-8	/2	Table 3-8	0x0010 0000
1000	UART Boot without Hardware Flow Control [UART0]	Master	Table 3-8	/2	Table 3-8	0x0010 0000
1001	EMIFA ROM FASTBOOT without AIS	Master	Table 3-8	/2	Table 3-8	–
1010	Reserved	–	–	–	–	–
1011	Reserved	–	–	–	–	–
1100	Reserved	–	–	–	–	–
1101	Reserved	–	–	–	–	–
1110	UART Boot with Hardware Flow Control [UART0]	Master	Table 3-8	/2	Table 3-8	0x0010 0000
1111	Reserved	–	–	–	–	–

(1) For all boot modes that default to DSPBOOTADDR = 0x0010 0000, the bootloader code disables all C64x+ cache (L2, L1P, and L1D) so that upon exit from the bootloader code, all C64x+ memories are configured as all RAM. If cache use is required, the application code must explicitly enable the cache. For more information on the bootloader, see the *Using the TMS320DM643x Bootloader* Application Report (literature number SPRAAG0).
(2) Any *supported* PLL MODE is available. [See Table 3-8 for supported DM6435 PLL MODE options].
(3) I2C Boot (BOOTMODE[3:0] = 0101b) is *only* available if the MXI/CLKIN frequency is between 21 MHz to 30 MHz. I2C Boot is ***not*** available for MXI/CLKIN frequencies less than 21 MHz.

Table 3-8. PLL Multiplier Selection (PLLMS[2:0]) in User-Select Multiplier Fastboot Modes (FASTBOOT = 1; AEM[2:0] = 000b or 101b)

DEVICE BOOT AND CONFIGURATION PINS	PLLC1 CLOCK SETTING AT BOOT		
PLLMS[2:0]	PLL MODE	CLKDIV1 DOMAIN (SYSCLK1 DIVIDER)	DEVICE FREQUENCY (SYSCLK1)
000	x20	/2	CLKIN x20 / 2
001	x15	/2	CLKIN x15 / 2
010	x16	/2	CLKIN x16 / 2
011	x18	/2	CLKIN x18 / 2
100	x22	/2	CLKIN x22 / 2
101	x25	/2	CLKIN x25 / 2
110	x27	/2	CLKIN x27 / 2
111	x30	/2	CLKIN x30 / 2

As shown in Table 3-5, Table 3-6, and Table 3-7, at device reset the Boot Controller defaults the DSPBOOTADDR to one of two values based on the boot mode selected. In all boot modes, the C64x+ is immediately released from reset and begins executing from address location indicated in DSPBOOTADDR.

- **Internal Bootloader ROM (0x0010 0000):** For most boot modes, the DSPBOOTADDR defaults to the internal Bootloader ROM so that the DSP can immediately execute the bootloader code in the internal ROM. The bootloader code decodes the captured BOOTMODE, FASTBOOT, default AEM (DAEM), and PLLMS information (in the BOOTCFG register) to determine the proper boot operation.

  Note: For all boot modes that default to DSPBOOTADDR = 0x0010 0000, the bootloader code disables all C64x+ cache (L2, L1P, and L1D) so that upon exit from the bootloader code, all C64x+ memories are configured as all RAM. If cache use is required, the application code must explicitly enable the cache. For more information on boot modes, see Section 3.4.1, *Boot Modes*. For more information on the bootloader, see the *Using the TMS320DM643x Bootloader* Application Report (literature number SPRAAG0).
- **EMIFA Chip Select Space 2 (0x4200 0000):** The EMIFA ROM Direct Boot in PLL Bypass Mode (BOOTCFG settings BOOTMODE[3:0] = 0100b, FASTBOOT = 0) is the ***only*** exception where the DSPBOOTADDR defaults to the EMIFA Chip Select Space 2. The DSP begins execution directly from the external ROM at this EMIFA space.

For more information how the bootloader code handles each boot mode, see *Using the TMS320DM643x Bootloader* Application Report (literature number SPRAAG0).

3.4.1.1 FASTBOOT

When DM6435 exits pin reset ($\overline{\text{RESET}}$ or $\overline{\text{POR}}$ released), the PLL Controllers (PLLC1 and PLLC2) default to PLL Bypass Mode. This means the PLLs are disabled, and the MXI/CLKIN clock input is driving the chip. All the clock domain divider ratios discussed in Section 6.3.4, *DM6435 Power and Clock Domains*, still apply. For example, assume an MXI/CLKIN frequency of 27 MHz—meaning the internal clock source for EMIFA is at CLKDIV3 domain = 27 MHz/3 = 9 MHz, a very slow clock. In addition, the EMIFA registers are reset to the slowest configuration which translates to very slow peripheral operation/boot.

To optimize boot time, the user should reprogram clock settings via the PLLC as early as possible during the boot process. The FASTBOOT pin facilitates this operation by allowing the device to boot at a faster clock rate.

Except for the EMIFA ROM Direct Boot in PLL Bypass Mode (BOOTCFG settings BOOTMODE[3:0] = 0100b, FASTBOOT = 0), all other boot modes default to executing from the Internal Bootloader ROM. The first action that the bootloader code takes is to decode the boot mode. If the FASTBOOT option is selected (BOOTCFG.FASTBOOT = 1), the bootloader software begins by programming the PLLC1 (System PLLC) to PLL Mode to give the device a slightly faster operation before fetching code from external devices. The exact PLL multiplier that the bootloader uses is determined by the AEM[2:0] and PLLMS[2:0] settings, as shown in Table 3-6 and Table 3-7.

Some boot modes *must* be accompanied with FASTBOOT = 1 so that the corresponding peripheral can run at a reasonable rate to communicate to the external device(s).

Note: PLLC2 still stays in PLL Bypass Mode, the bootloader *does not* reconfigure it.

3.4.1.2 Selecting FASTBOOT PLL Multiplier

Table 3-6, Table 3-7, and Table 3-8 show the PLL multipliers used by the bootloader code during fastboot (FASTBOOT = 1) and the resulting device frequency. The user is responsible for selecting the bootmode with the appropriate PLL multiplier for their MXI/CLKIN clock source so that the device speed and PLL frequency range requirements are met. For the PLLC1 Clock Frequency Ranges, see Table 6-15, *PLLC1 Clock Frequency Ranges* in Section 6.7.1, *PLL1 and PLL2*.

The following are guidelines for PLL output frequency and device speed (frequency):

- **PLL Output Frequency**: (PLLOUT = CLKIN frequency * boot PLL Multiplier) ***must*** stay within the PLLOUT frequency range in Table 6-15, *PLLC1 Clock Frequency Ranges*.
- **Device Frequency**: (SYSCLK1) calculated from Table 3-6 and Table 3-7 ***must not*** exceed the SYSCLK1 maximum frequency in Table 6-15, *PLLC1 Clock Frequency Ranges*.

  For example, for a 600-MHz device with a CLKIN = 27 MHz, in order to stay within the PLLOUT frequency range and SYSCLK1 maximum frequency from Table 6-15, *PLLC1 Clock Frequency Ranges*, the user ***must*** select a boot mode with a PLL1 multiplier between x15 and x22.

3.4.1.3 EMIFA Boot Modes

As shown in Table 3-5, Table 3-6, and Table 3-7, there are different types of EMIFA Boot Modes. This subsection summarizes these types of EMIFA boot modes. For further detailed information, see the *Using the TMS320DM643x Bootloader* Application Report (literature number SPRAAG0).

- **EMIFA ROM Direct Boot in PLL Bypass Mode** (FASTBOOT = 0, BOOTMODE[3:0] = 0100b)
  - The C64x+ fetches the code directly from EMIFA Chip Select 2 Space [$\overline{\text{EM\_CS2}}$] (address 0x4200 0000)
  - The PLL is in Bypass Mode
  - EMIFA is configured as Asynchronous EMIF. The user is responsible for ensuring the desirable Asynchronous EMIF pins are available through configuration pins AEM[2:0] and AEAW[2:0]. AEM[2:0] ***must*** be configured to 001b [8-bit EMIFA (Async) Pinout Mode 1].
- **EMIFA ROM Fastboot with AIS** (FASTBOOT = 1, BOOTMODE[3:0] = 0100b)
  - The C64x+ begins execution from the internal bootloader ROM at address 0x0010 0000.
  - The bootloader code programs PLLC1 to PLL Mode to speed up the boot process. The PLL multiplier value is determined by the AEM[2:0] and PLLMS[2:0] configurations as shown in Table 3-6 and Table 3-7.
  - The bootloader code reads code from the EMIFA $\overline{\text{EM\_CS2}}$ space using the application image script (AIS) format.
  - EMIFA is configured as Asynchronous EMIF. The user is responsible for ensuring the desirable Asynchronous EMIF pins are available through configuration pins AEM[2:0] and AEAW[2:0]. AEM[2:0] ***must*** be configured to 001b [8-bit EMIFA (Async) Pinout Mode 1].
- **EMIFA ROM Fastboot without AIS**: (FASTBOOT = 1, BOOTMODE[3:0] = 1001b)
  - The C64x+ begins execution from the internal bootloader ROM at address 0x0010 0000.
  - The bootloader code programs PLLC1 to PLL Mode to speed up the boot process. The PLL multiplier value is determined by the AEM[2:0] and PLLMS[2:0] configurations as shown in Table 3-6 and Table 3-7.
  - The bootloader code then jumps to the EMIFA $\overline{\text{EM\_CS2}}$ space, at which point the C64x+ fetches the code directly from address 0x4200 0000.
  - EMIFA is configured as Asynchronous EMIF. The user is responsible for ensuring the desirable Asynchronous EMIF pins are available through configuration pins AEM[2:0] and AEAW[2:0]. AEM[2:0] ***must*** be configured to 001b [8-bit EMIFA (Async) Pinout Mode 1].

- **NAND Flash Boot**: (FASTBOOT = 0 or 1, BOOTMODE[3:0] = 0111b)
  - The C64x+ begins execution from the internal bootloader ROM at address 0x0010 0000.
  - Depending on the FASTBOOT, AEM[2:0], and PLLMS[2:0] settings, the bootloader code may program the PLLC1 to PLL Mode to speed up the boot process. See Table 3-5, Table 3-6, and Table 3-7.
  - The bootloader code reads the code from EMIFA (NAND) $\overline{\text{EM\_CS2}}$ (address 0x4200 0000) using AIS format.
  - EMIFA is configured in NAND mode. The user is responsible for ensuring the desirable Asynchronous EMIF pins are available through configuration pins AEM[2:0] and AEAW[2:0]. AEM[2:0] ***can*** be configured to 001b [8-bit EMIFA (Async) Pinout Mode 1] or 101b [8-bit EMIFA (NAND) Pinout Mode 5].

3.4.1.4 Serial Boot Modes (I2C, UART[UART0], SPI[McBSP0])

This subsection discusses how the bootloader configures the clock dividers for the serial boot modes—I2C boot, UART boot, and SPI boot.

3.4.1.4.1 I2C Boot

If FASTBOOT = 0, then I2C Boot (BOOTMODE = 0101) is performed in Standard-Mode (up-to 100 kbps). If FASTBOOT = 1, then I2C Boot is performed in Fast-Mode (up-to 400 kbps). The actual I2C data transfer rate is dependent on the MXI/CLKIN frequency.

This is how the bootloader programs the I2C:

- I2C Boot in Fast-Mode (BOOTMODE[3:0] = 0101b, FASTBOOT = 1)
  - I2C register settings: ICPSC.IPSC = 2_{10}, ICCLKL.ICCL = 8_{10}, ICCKH.ICCH = 8_{10}
  - Resulting in the following I2C prescaled module clock frequency (internal I2C clock):
    - (CLKIN frequency in MHz) / 3
  - Resulting in the following I2C serial clock (SCL):
    - SCL frequency (in kHz) = (CLKIN frequency in MHz) / 78 * 1000
    - SCL low pulse duration (in µs) = 39 / (CLKIN frequency in MHz)
    - SCL high pulse duration (in µs) = 39 / (CLKIN frequency in MHz)
- I2C Boot in Standard-Mode (BOOTMODE[3:0] = 0101b, FASTBOOT = 0)
  - I2C register settings: ICPSC.IPSC = 2_{10}, ICCLKL.ICCL = 45_{10}, ICCKH.ICCH = 45_{10}
  - Resulting in the following I2C prescaled module clock frequency (internal I2C clock):
    - (CLKIN frequency in MHz) / 3
  - Resulting in the following I2C serial clock (SCL):
    - SCL frequency (in kHz) = (CLKIN frequency in MHz) / 300 * 1000
    - SCL low pulse duration (in µs) = 150 / (CLKIN frequency in MHz)
    - SCL high pulse duration (in µs) = 150 / (CLKIN frequency in MHz)

Note: The I2C peripheral requires that the prescaled module clock frequency ***must*** be between 7 MHz and 12 MHz. Therefore, the I2C boot is *only* available for MXI/CLKIN frequency between 21 MHz and 30 MHz.

For more details on the I2C periperhal configurations and clock requirements, see the *TMS320DM643x DMP Inter-Integrated Circuit (I2C) Peripheral* User's Guide (literature number SPRU991).

3.4.1.4.2 UART Boot

For UART Boot (BOOTMODE[3:0] = 1000b or 1110b), the bootloader programs the UART0 peripheral as follows:

- UART0 divisor is set to 15_{10}
- Resulting in this UART0 baud rate in kilobit per second (kbps):
  - (CLKIN frequency in MHz) * 1000 / (15 * 16)

The user is responsible for ensuring the resulting baud rate is appropriate for the system. The UART0 divisor (/15) is optimized for CLKIN frequency between 27 to 29 MHz to stay within 5% of the 115200-bps baud rate.

For more details on the UART peripheral configurations and clock generation, see the *TMS320DM643x DMP Universal Asynchronous Receiver/Transmitter (UART)* User's Guide (literature number SPRU997).

3.4.1.4.3 SPI Boot

Both 16-bit address SPI Boot (BOOTMODE = 0110) and 24-bit address SPI boot are performed through the McBSP0 peripheral. The bootloader programs the McBSP0 peripheral as follows:

- McBSP0 register settings: SRGR.CLKGDV = 2_{10}
- Resulting in this SPI serial clock frequency:
  - (SYSCLK3 frequency in MHz) / 3

SYSCLK3 frequency = SYSCLK1 frequency / 6. SYSCLK1 frequency during boot can be found in Table 3-5, Table 3-6, Table 3-7, and/or Table 3-8 based on the boot mode selection.

For example, if BOOTMODE[3:0] = 0110b, FASTBOOT = 1, the MXI/CLKIN frequency = 27 MHz, AEM[2:0] = 000b, PLLMS[2:0] = 100b, the combination of Table 3-7 and Table 3-8 indicates that the device frequency (SYSCLK1) is CLKIN x 22 / 2 = 297 MHz. This means SYSCLK3 frequency is 297 / 6 = 49.5 MHz, resulting in SPI serial clock frequency of 49.5 / 3 = 16.5 MHz.

3.4.1.5 Host Boot Modes

The DM6435 supports HPI Boot.

The HPI Boot is available in fastboot and non-fastboot, as shown in Table 3-5, Table 3-6, and Table 3-7.

Note: the HPI $\overline{\text{HSTROBE}}$ inactive pulse duration timing requirement [$t_{w(HSTBH)}$] is dependent on the HPI internal clock source (SYSCLK3) frequency (see Section 6.13.3, *HPI Electrical Data/Timing*). The external host ***must*** be aware of the SYSCLK3 frequency during boot to ensure the $\overline{\text{HSTROBE}}$ pulse duration timing requirement is met.

3.4.2 Bootmode Registers

3.4.2.1 BOOTCFG Register

The Device Bootmode (see Section 3.4.1, *Boot Modes*) and Configuration pins (see Section 3.5.1, *Device and Peripheral Configurations at Device Reset*) latched at reset are captured in the Device Boot Configuration (BOOTCFG) register which is accessible through the System Module. This is a *read-only* register. The bits show the values latched from the corresponding configuration pins sampled at device reset. For more information on how these pins are sampled at device reset, see Section 6.5.1.2, *Latching Boot and Configuration Pins*. For the corresponding device boot and configuration pins, see Table 2-5, *BOOT Terminal Functions*.

31											20	19	18	17	16
RESERVED												FASTBOOT	RESERVED		
R-0000 0000 0001												R-L	R-000		

15	14	13	12	11	10	9	8	7	6	5	4	3	2	1	0
RSV	PLLMS			RSV	DAEM			RESERVED				BOOTMODE			
R-0	R-LLL			R-0	R-LLL			R-0000				R-LLLL			

LEGEND: R = Read only; L = pin state latched at reset rising edge; *-n* = value after reset

Figure 3-3. BOOTCFG Register—0x01C4 0014

Table 3-9. BOOTCFG Register Description

Bit	Field Name	Description
31:20	RESERVED	Reserved. Writes have no effect.
19	FASTBOOT	Fastboot (see Section 3.4.1.1, FASTBOOT) This field is used by the device bootloader code to determine if it needs to speed up the device to PLL mode before booting. 0 = No Fastboot 1 = Fastboot **The default value is latched from FASTBOOT configuration pin.**
18:15	RSV	Reserved. Writes have no effect.
14:12	PLLMS	PINMUX0.AEAW default [AEAW] and Fastboot PLL Multiplier Select [PLLMS] (see Section 3.5.1.2, *EMIFA Address Width Select [AEAW] and Fast Boot PLL Multiplier Select [PLLMS]*) The AEAW[2:0]/PLLMS configuration pins serve two purposes: **AEAW[2:0]: 8-bit EMIFA (Async) Pinout Mode 1 Address Width** If AEM = 001, this field serves as AEAW and it indicates the 8-bit EMIFA (Async) Pinout Mode 1 Address Width. In this case, this field affects pin mux control only by setting the default of Pin Mux Control Register PINMUX0.AEAW[2:0]. This field does not affect EMIFA register settings. For more details on the AEAW settings, see Section 3.7.2.1, *PINMUX0 Register Description*. **PLLMS: Fastboot PLL Multiplier Select** If FASTBOOT = 1 and AEM[2:0] = 000b *or* 101b, this field selects the FASTBOOT PLL Multiplier. In this case, this field *does not* affect the pin mux control or the EMIFA register settings. The bootloader code uses this field to determine the PLL multiplier used for Fastboot.
11	RSV	Reserved. Writes have no effect.
10:8	DAEM	PINMUX0.AEM default [DAEM] (see Section 3.5.1.1, *EMIFA Pinout Mode (AEM[2:0])*) For more details on the AEM settings, see Section 3.7.2.1, *PINMUX0 Register Description*. This field affects pin mux control by setting the default of PINMUX0.AEM. This field *does not* affect EMIFA Register settings. **The default value is latched from the AEM[2:0] configuration pins.**
7:4	RESERVED	Reserved. Writes have no effect.
3:0	BOOTMODE	Boot Mode (see Section 3.4.1, *Boot Modes*) This field is used in conjunction with FASTBOOT, AEM, and PLLMS to determine the device boot mode. **The default value is latched from the BOOTMODE[3:0] configuration pins.**

3.4.2.2 BOOTCMPLT Register

If the bootloader code detects an error during boot, it records the error status in the Boot Complete (BOOTCMPLT) register.

In addition, the BOOTCMPLT register is used for communication between the external host and the bootloader code during a Host Boot (HPI Boot). Once the external host has completed boot, it ***must*** perform the following communication with the bootloader code:

- Write the desired 32-bit CPU starting address in the DSPBOOTADDR register (see Section 3.4.2.3, *DSPBOOTADDR Register*).
- Write a '1' to the Boot Complete (BC) bit field in the BOOTCMPLT register to indicate that the host has completed booting this device.

Once the bootloader code detects BC = 1, it directs the CPU to begin executing from the DSPBOOTADDR register.

The BOOTCMPLT register is reset by any device-level global reset. For the list of device-level global resets, see Section 6.5, *Reset*.

31 – 20	19 – 16
RESERVED	ERR
R/W-0000 0000 0000	R/W-0000

15 – 1	0
RESERVED	BC
R/W- 0000 0000 0000 000	R/W-0

LEGEND: R = Read; W = Write; -*n* = value after reset

Figure 3-4. BOOTCMPLT Register— 0x01C4 000C

Table 3-10. BOOTCMPLT Register Description

Bit	Field Name	Description
31:20	RESERVED	Reserved. For proper device operation, the user should *only* write "0" to these bits.
19:16	ERR	Boot Error 0000 = No Error **(default)**. 0001 - 1111 = bootloader software detected a boot error and aborted the boot. For the error codes, see the *Using the TMS320DM643x DMP Bootloader* Application Report (literature number SPRAAG0).
15:1	RESERVED	Reserved. For proper device operation, the user should *only* write "0" to these bits.
0	BC	Boot Complete Flag from Host This field is *only* applicable to Host Boots. 0 = Host *has not* completed booting this device **(default)**. 1 = Host *has* completed booting this device. DSP can begin executing from the DSPBOOTADDR register value.

3.4.2.3 DSPBOOTADDR Register

The DSP Boot Address (DSPBOOTADDR) register contains the starting address for the C64x+ CPU. Whenever the C64x+ is released from reset, it begins executing from the location pointed to by DSPBOOTADDR register. For Host boots (HPI Boot), the DSPBOOTADDR register is also used for communication between the Host and the bootloader code during boot.

The DSPBOOTADDR register is reset by any device-level global reset. For the list of device-level global resets, see Section 6.5, *Reset*.

31	0
DSPBOOTADDR	
R/W-0x0010 0000 *or* 0x4200 00000	

LEGEND: R = Read; W = Write; -*n* = value after reset

Figure 3-5. DSPBOOTADDR Register— 0x01C4 0008

Table 3-11. DSPBOOTADDR Register Description

Bit	Field Name	Description
31:0	DSPBOOTADDR	DSP Boot Address After boot, the C64x+ CPU begins execution from this 32-bit address location. The lower 10 bits (bits 9:0) should *always* be programmed to "0" as they are ignored by the C64x+. The default value of the DSPBOOTADDR depends on the boot mode selected. The DSPBOOTADDR defaults to 0x0010 0000 when the Internal Bootloader ROM is used. *or* The DSPBOOTADDR defaults to 0x4200 0000 when EMIFA $\overline{CS2}$ Space is used. For the boot mode selections, see Table 3-5, *Non-Fastboot Modes*; Table 3-6, *Fixed-Multiplier Fastboot Modes*; and Table 3-7, *User-Select Multiplier Fastboot Modes*.

For Non-Host Boot Modes, software can leave the DSPBOOTADDR register at default.

For Host Boots (HPI Boot), the DSPBOOTADDR register is also used for communication between the Host and the bootloader code during boot. For Host Boots, the DSPBOOTADDR register defaults to Internal Bootloader ROM, and the C64x+ CPU is immediately released from reset so that it can begin executing the bootloader code in this internal ROM. The bootloader code waits for the Host to boot the device. Once the Host is done booting the device, it ***must*** write a new starting address into the DSPBOOTADDR register, and follow with writing BOOTCMPLT.BC = 1 to indicate the boot is complete. As soon as the bootloader code detects BOOTCMPLT.BC = 1, it instructs the CPU to jump to this new DSPBOOTADDR address. At this point, the CPU continues the rest of the code execution starting from the new DSPBOOTADDR location and the boot is completed.

3.5 Configurations At Reset

Some device configurations are determined at reset. The following subsections give more details.

3.5.1 Device and Peripheral Configurations at Device Reset

Table 2-5, BOOT Terminal Functions lists the device boot and configuration pins that are latched at device reset for configuring basic device settings for proper device operation. Table 3-12, summarizes the device boot and configuration pins, and the device functions that they affect.

Table 3-12. Default Functions Affected by Device Boot and Configuration Pins

DEVICE BOOT AND CONFIGURATION PINS(1)	BOOT SELECTED	PIN MUX CONTROL	GLOBAL SETTING	PERIPHERAL SETTING
BOOTMODE[3:0]	Boot Mode	**PINMUX0/PINMUX1 Registers**: Based on BOOTMODE[3:0], the bootloader code programs PINMUX0 and PINMUX1 registers to select the appropriate pin functions required for boot.	**I/O Pin Power**: Based on BOOTMODE[3:0], the bootloader code programs VDD3P3V_PWDN register to power up the I/O pins required for boot.	**PSC/Peripherals**: Based on BOOTMODE[3:0], the bootloader code programs the PSC to put boot-related peripheral(s) in the Enable State, and programs the peripheral(s) for boot operation.
FASTBOOT	Fastboot	–	**Sets Device Frequency**: Based on BOOTMODE, FASTBOOT, PLLMS, and AEM the bootloader code programs PLLC1.	–
AEAW[2:0]/PLLMS[2:0]	If FASTBOOT = 1 and AEM = 000b or 101b the PLLMS[2:0] selects the FASTBOOT PLL Multiplier.	**PINMUX0.AEAW**: AEAW[2:0] sets the default of this field to control the EMIFA address bus width (*only applicable if* PINMUX0.AEM = 001b). Affects the pin muxing in EMIFA/VPSS Sub-Block 0.	**Sets Device Frequency**: Based on BOOTMODE, FASTBOOT, PLLMS, and AEM the bootloader code programs PLLC1.	–
AEM[2:0]	Together with FASTBOOT and PLLMS[2:0] , determines the FASTBOOT PLL Multiplier.	**PINMUX0.AEM**: Sets the default of this field to control the EMIFA Pinout Mode. Affects the pin muxing in EMIFA/VPSS Sub-Block 0, 1, and 3.	**Sets Device Frequency**: Based on BOOTMODE, FASTBOOT, PLLMS, and AEM the bootloader code programs PLLC1.	**PSC/EMIFA**: The EMIFA module state defaults to SwRstDisable if AEM = 0; otherwise, the EMIFA module state defaults to Enable.

(1) Software can modify all PINMUX0 and PINMUX1 bit fields from their defaults.

For proper device operation, external pullup/pulldown resistors may be required on these device boot and configuration pins. For discussion situations where external pullup/pulldown resistors are required, see Section 3.9.1, *Pullup/Pulldown Resistors*.

Note: All DM6435 configuration inputs (BOOTMODE[3:0], FASTBOOT, AEAW[2:0]/PLLMS[2:0] and AEM[2:0]) are multiplexed with other functional pins. These pins function as device boot and configuration pins only during device reset. The user ***must*** take care of any potential data contention in the system. To help avoid system data contention, the DM6435 puts these configuration pins into a high-impedance state (Hi-Z) when device reset ($\overline{\text{RESET}}$ *or* $\overline{\text{POR}}$) is asserted, and continues to hold them in a high-impedance state until the internal global reset is removed; at which point, the default peripheral (either GPIO *or* EMIFA based on default of AEM[2:0]) will now control these pins.

All of the device boot and configuration pin settings are captured in the corresponding bit fields in the BOOTCFG register (see Section 3.4.2.1).

The following subsections provide more details on the device configurations determined at device reset: AEM and AEAW/PLLMS.

3.5.1.1 EMIFA Pinout Mode (AEM[2:0])

To support different usage scenarios, the DM6435 provides intricate pin multiplexing between the EMIFA and other peripherals. The PINMUX0.AEM register bit field in the System Module determines the EMIFA Pinout Mode. The AEM[2:0] pins only select the default EMIFA Pinout Mode. It is latched at device reset de-assertion (high) into the BOOTCFG.DAEM bit field. The AEM[2:0] value also sets the default of the PINMUX0.AEM bit field. While the BOOTCFG.DAEM bit field shows the actual latched value and *cannot* be modified, the PINMUX0.AEM value can be changed by software to modify the EMIFA Pinout Mode.

Note: The AEM[2:0] value *does not* affect the operation of the EMIFA module itself. It *only* affects which EMIFA pins are brought out to the device pins. For more details on the AEM settings, see Section 3.7, *Multiplexed Pin Configurations*.

In addition, for Fastboot modes (FASTBOOT = 1), the bootloader code determines the PLL1 multiplier based on the default settings of AEM[2:0] and PLLMS[2:0]. For more details, see Section 3.4.1.1, *Fastboot*, and Section 3.5.1.2, *EMIFA Address Width Select (AEAW) and FASTBOOT PLL Multiplier Select (PLLMS)*.

3.5.1.2 EMIFA Address Width Select (AEAW) and FASTBOOT PLL Multiplier Select (PLLMS)

The AEAW[2:0]/PLLMS[2:0] pins serve two functional purposes (AEAW *or* PLLMS), depending on the FASTBOOT and AEM settings. The AEAW[2:0]/PLLMS[2:0] pins are latched at device reset de-assertion (high) and captured in the BOOTCFG.PLLMS bit field. This value also sets the default of the PINMUX0.AEAW field.

While the BOOTCFG.PLLMS field shows the actual latched value and *cannot* be modified, the PINMUX0.AEAW value *can* be changed by software to modify the EMIFA pinout.

AEAW as EMIFA Address Width Select (AEAW)

If AEM[2:0] = 001b [8-bit EMIFA (Async) Pinout Mode 1], the AEAW[2:0]/PLLMS[2:0] pins serve as AEAW to set the default of the EMIFA Address Width Selection.

When EMIFA is used in the 8-bit EMIFA (Async) Pinout Mode 1 (PINMUX0.AEM = 001b), the user has the option to determine how many address pins are needed. The unused address pins can be used as general-purpose input/output (GPIO) pins *or* extra data pins for VPFE. For more details on how the AEAW settings control the exact pin out when AEM = 001b, see Section 3.7.3.11, *EMIFA/VPSS Block Muxing*. For other EMIFA Pinout Modes (AEM not 001b), AEAW is *not* applicable in determining the EMIFA address width.

Note: AEAW[2:0] value ***does not*** affect the operation of the EMIFA module itself. It ***only*** affects which of the EMIFA address bits are brought out to the device pins.

AEAW as Fast Boot PLL Multiplier Select (PLLMS)

If FASTBOOT = 1, and AEM[2:0] = 000b [No EMIFA] *or* 101b [8-bit EMIFA (NAND) Pinout Mode 5], the AEAW[2:0]/PLLMS[2:0] pins serve as PLLMS to select PLL multiplier for Fastboot modes.

For more information on boot modes and the FASTBOOT PLL multiplier selection, see Section 3.4.1, *Boot Modes*.

3.6 Configurations After Reset

The following sections provide details on configuring the device after reset.

Multiplexed pins are configured both at and after reset. Section 3.5.1, *Device and Peripheral Configurations at Device Reset*, discusses multiplexed pin control at reset. For more details on multiplexed pins control after reset, see Section 3.7 , *Multiplexed Pin Configurations*.

3.6.1 Switch Central Resource (SCR) Bus Priorities

Prioritization within the Switched Central Resource (SCR) is programmable for each master. The register bit fields and default priority levels for DM6435 bus masters are shown in Table 3-13, *DM6435 Default Bus Master Priorities*. The priority levels should be tuned to obtain the best system performance for a particular application. Lower values indicate higher priority. For most masters, their priority values are programmed at the system level by configuring the MSTPRI0 and MSTPRI1 registers. Details on the MSTPRI0/1 registers are shown in Figure 3-6 and Figure 3-7. The C64x+, VPSS, and EDMA masters contain registers that control their own priority values.

Table 3-13. DM6435 Default Bus Master Priorities

Priority Bit Field	Bus Master	Default Priority Level
VPSSP	VPSS	0 (VPSS PCR Register)
EDMATC0P	EDMATC0	0 (EDMACC QUEPRI Register)
EDMATC1P	EDMATC1	0 (EDMACC QUEPRI Register)
EDMATC2P	EDMATC2	0 (EDMACC QUEPRI Register)
C64X+_DMAP	C64X+ (DMA)	7 (C64x + MDMAARBE.PRI field)
C64X+_CFGP	C64X+ (CFG)	1 (MSTPRI0 Register)
EMACP	EMAC	4 (MSTPRI1 Register)
VLYNQP	VLYNQ	4 (MSTPRI1 Register)
HPIP	HPI	4 (MSTPRI1 Register)

31 – 16	15 – 11	10 – 9	8 – 7	0
RESERVED	RESERVED	C64X+_CFGP		RESERVED
R-0000 0000 0000 0000	R-0000 0	R/W-001		R-0000 0000

LEGEND: R = Read; W = Write; *-n* = value after reset

Figure 3-6. MSTPRI0 Register— 0x01C4 003C

Table 3-14. MSTPRI0 Register Description

Bit	Field Name	Description
31:11	RESERVED	Reserved. Read-only, writes have no effect.
10:8	C64X+_CFGP	C64X+_CFG master port priority in System Infrastructure. 000 = Priority 0 (**Highest**) 100 = Priority 4 001 = Priority 1 101 = Priority 5 010 = Priority 2 110 = Priority 6 011 = Priority 3 111 = Priority 7 (**Lowest**)
7:0	RESERVED	Reserved. Read-only, writes have no effect.

31	27	26	25	24	23	22	21	20	19	18	17	16
RESERVED		RSV			RSV	HPIP			RSV	VLYNQP		
R-0000 0		R/W-100			R-0	R/W-100			R-0	R/W-100		

15	3	2	1	0
RESERVED		EMACP		
R- 0000 0000 0000 0		R/W-100		

LEGEND: R = Read; W = Write; -*n* = value after reset

Figure 3-7. MSTPRI1 Register— 0x01C4 0040

Table 3-15. MSTPRI1 Register Description

Bit	Field Name	Description
31:27	RESERVED	Reserved. Read-only, writes have no effect.
26:24	RSV	Reserved. For proper device operation, the user ***must*** *only* write "100" to these bits.
23	RSV	Reserved. Read-only, writes have no effect.
22:20	HPIP	HPI master port priority in System Infrastructure. 000 = Priority 0 (**Highest**) 100 = Priority 4 001 = Priority 1 101 = Priority 5 010 = Priority 2 110 = Priority 6 011 = Priority 3 111 = Priority 7 (**Lowest**)
19	RSV	Reserved. Read-only, writes have no effect.
18:16	VLYNQP	VLYNQ master port priority in System Infrastructure. 000 = Priority 0 (**Highest**) 100 = Priority 4 001 = Priority 1 101 = Priority 5 010 = Priority 2 110 = Priority 6 011 = Priority 3 111 = Priority 7 (**Lowest**)
15:3	RESERVED	Reserved. Read-only, writes have no effect.
2:0	EMACP	EMAC master port priority in System Infrastructure. 000 = Priority 0 (**Highest**) 100 = Priority 4 001 = Priority 1 101 = Priority 5 010 = Priority 2 110 = Priority 6 011 = Priority 3 111 = Priority 7 (**Lowest**)

3.6.2 Peripheral Selection After Device Reset

After device reset, most peripheral configurations are done within the peripheral's registers. This section discusses some additional peripheral controls in the System Module. For information on multiplexed pin controls that determine what peripheral pins are brought out to the pins, see Section 3.7, *Multiplexed Pin Configurations*.

3.6.2.1 HPI Control Register (HPICTL)

The HPI Control (HPICTL) register determines the Host Burst Write Time-Out value. **The user should *only* modify this register once during device initialization. When modifying this register, the user *must* ensure the HPI FIFOs are empty and there are no on-going HPI transactions.**

31					16
RESERVED					
R-0000 0000 0000 0000					

15	10	9	8	7	0
RESERVED		RESERVED		TIMOUT	
R- 0000 00		R/W-00		R/W-1000 0000	

LEGEND: R = Read; W = Write; -*n* = value after reset

Figure 3-8. HPICTL Register— 0x01C4 0030

Table 3-16. HPICTL Register Description

Bit	Field Name	Description
31:10	RESERVED	Reserved. Read-only, writes have no effect.
9:8	RESERVED	Reserved. For proper device operation, the user should *only* write "0" to these bits (default).
7:0	TIMOUT	Host Burst Write Timeout Value When the HPI time-out counter reaches the value programmed here, the HPI write FIFO content is flushed. For more details on the time-out counter and its use in write bursting, see the *TMS320DM643x DMP Host Port Interface (HPI)* User's Guide (literature number SPRU998).

3.6.2.2 Timer Control Register (TIMERCTL)

The Timer Control Register (TIMERCTL) provides additional control for Timer0 and Timer2. **The user should only modify this register once during device initialization, when the corresponding Timer is not in use.**

- Timer 2 Control: The TIMERCTL.WDRST bit determines if the WatchDog timer event (Timer 2) can cause a device max reset. For more details on the description of a maximum reset, see Section 6.5.3, *Maximum Reset*.
- Timer 0 Control: The TINP0SEL bit selects the clock source connected to Timer0's TIN0 input.

31			16
RESERVED			
R-0000 0000 0000 0000			

15	2	1	0
RESERVED		TINP0 SEL	WD RST
R- 0000 0000 0000 00		R/W-0	R/W-1

LEGEND: R = Read; W = Write; -*n* = value after reset

Figure 3-9. TIMERCTL Register— 0x01C4 0084

Table 3-17. TIMERCTL Register Description

Bit	Field Name	Description
31:2	RESERVED	Reserved. Read-Only, writes have no effect.
1	TINP0SEL	Timer0 External Input (TIN0) Select 0 = Timer0 external input comes directly from the TINP0L pin (**default**). 1 = Timer0 external input is TINP0L pin divided by 6. For example, if TINP0L = 27MHz, Timer0 input TIN0 is 27MHz / 6 = 4.5 MHz.
0	WDRST	WatchDog Reset Enable 0 = WatchDog Timer Event (WDINT from Timer2) does not cause device reset. 1 = WatchDog Timer Event (WDINT from Timer2) causes a device max reset (**default**).

3.6.2.3 EDMA TC Configuration Register (EDMATCCFG)

The EDMA Transfer Controller Configuration (EDMATCCFG) register configures the default burst size (DBS) for EDMA TC0, EDMA TC1, and EDMA TC2. For more information on the correct usage of DBS, see the *TMS320DM643x DMP Enhanced Direct Memory Access (EDMA) Controller* User's Guide (literature number SPRU987). **The user should only modify this register once during device initialization and when the corresponding EDMA TC is not in use**.

31							16
RESERVED							
R-0000 0000 0000 0000							

15	6	5	4	3	2	1	0
RESERVED		TC2DBS		TC1DBS		TC0DBS	
R-0000 0000 00		R/W-10		R/W-01		R/W-00	

LEGEND: R = Read; W = Write; -*n* = value after reset

Figure 3-10. EDMATCCFG Register— 0x01C4 0088

Table 3-18. EDMATCCFG Register Description

Bit	Field	Description
31:6	RESERVED	Reserved. Read-Only, writes have no effect.
5:4	TC2DBS	EDMA TC2 Default Burst Size 00 = 16 byte 01 = 32 byte 10 = 64 byte (**default**) 11= reserved EDMA TC2 is intended for miscellaneous transfers. TC2 FIFO size is 128 bytes, regardless of Default Burst Size setting.
3:2	TC1DBS	EDMA TC1 Default Burst Size 00 = 16 byte 01 = 32 byte (**default**) 10 = 64 byte 11 = reserved EDMA TC1 is intended for high throughput bulk transfers. TC1 FIFO size is 256 bytes, regardless of Default Burst Size setting.
1:0	TC0DBS	EDMA TC0 Default Burst Size 00 = 16 byte (**default**) 01 = 32 byte 10 = 64 byte 11 = reserved EDMA TC0 is intended for short burst transfers with stringent deadlines (e.g., McBSP, McASP). TC0 FIFO size is 128 bytes, regardless of Default Burst Size setting.

3.7 Multiplexed Pin Configurations

DM6435 makes extensive use of pin multiplexing to accommodate a large number of peripheral functions in the smallest possible package, providing ultimate flexibility for end applications.

The Pin Multiplex Registers PINMUX0 and PINMUX1 in the System Module are responsible for controlling all pin multiplexing functions on the DM6435. The default setting of some of the PINMUX0 and PINMUX1 bit fields are configured by configuration pins latched at reset (see Section 3.5.1, *Device and Peripheral Configurations at Device Reset*). After reset, software may program the PINMUX0 and PINMUX1 registers to switch pin functionalities.

The following peripherals have multiplexed pins: VPSS (VPFE), EMIFA, HPI, VLYNQ, EMAC, McASP0, McBSP0, PWM0, PWM1, PWM2, Timer0, Timer1, UART0, UART1, HECC, and GPIO.

The device is divided into the following Pin Multiplexed Blocks (Pin Mux Blocks):

- **EMIFA/VPSS Block:** VPSS (VPFE), EMIFA, and GPIO. This block is further subdivided into these sub-blocks:
  - **Sub-Block 0:** VPFE (CCDC), part of EMIFA (address and control), and GPIO
  - **Sub-Block 1:** part of EMIFA (data, address, control), and GPIO
  - **Sub-Block 2:** part of EMIFA (control signals EM_WAIT/(RDY/$\overline{\text{BSY}}$), $\overline{\text{EM\_OE}}$, and $\overline{\text{EM\_WE}}$)
  - **Sub-Block 3:** part of EMIFA (address EM_A[12:5]), and GPIO
- **Host Block:** HPI, VLYNQ, EMAC, and GPIO
- **Serial Port Block:** McBSP0, McASP0, and GPIO. This block is further sub-divided into sub-blocks.
  - **Serial Port Sub-Block 0:** McBSP0, part of McASP0, and GPIO
  - **Serial Port Sub-Block 1:** part of McASP0 and GPIO
- **UART0 Flow Control Block:** UART0 flow control, PWM0, and GPIO
- **UART0 Data Block:** UART0 data and GPIO
- **Timer0 Block:** Timer0 and McBSP0 CLKS pins
- **Timer1 Block:** Timer1 and HECC, UART1 data
- **PWM1 Block:** PWM1 and GPIO
- **CLKOUT Block:** CLKOUT0, PWM2, and GPIO

As shown in the list above, the McBSP0 and UART0 peripherals span multiple Pin Mux Blocks. To use these peripherals, they must be selected in all relevant Pin Mux Blocks. For more details, see Section 3.7.3, *Pin Multiplexing Details*, and Section 3.7.3.2, *Peripherals Spanning Multiple Pin Mux Blocks*.

Note: there is no actual pin multiplexing in EMIFA/VPSS Sub-Block 2. However this is still considered a "pin mux block" because it contains part of the pins necessary for EMIFA.

A high level view of the Pin Mux Blocks is shown in Figure 3-11. In each Pin Mux Block, the PINMUX0/PINMUX1 default settings are underlined.

Note: some default pin functions are determined by configuration pins (AEAW[2:0] and AEM[2:0]); therefore, more than one configuration setting can serve as default based on the configuration pin settings latched at device reset.

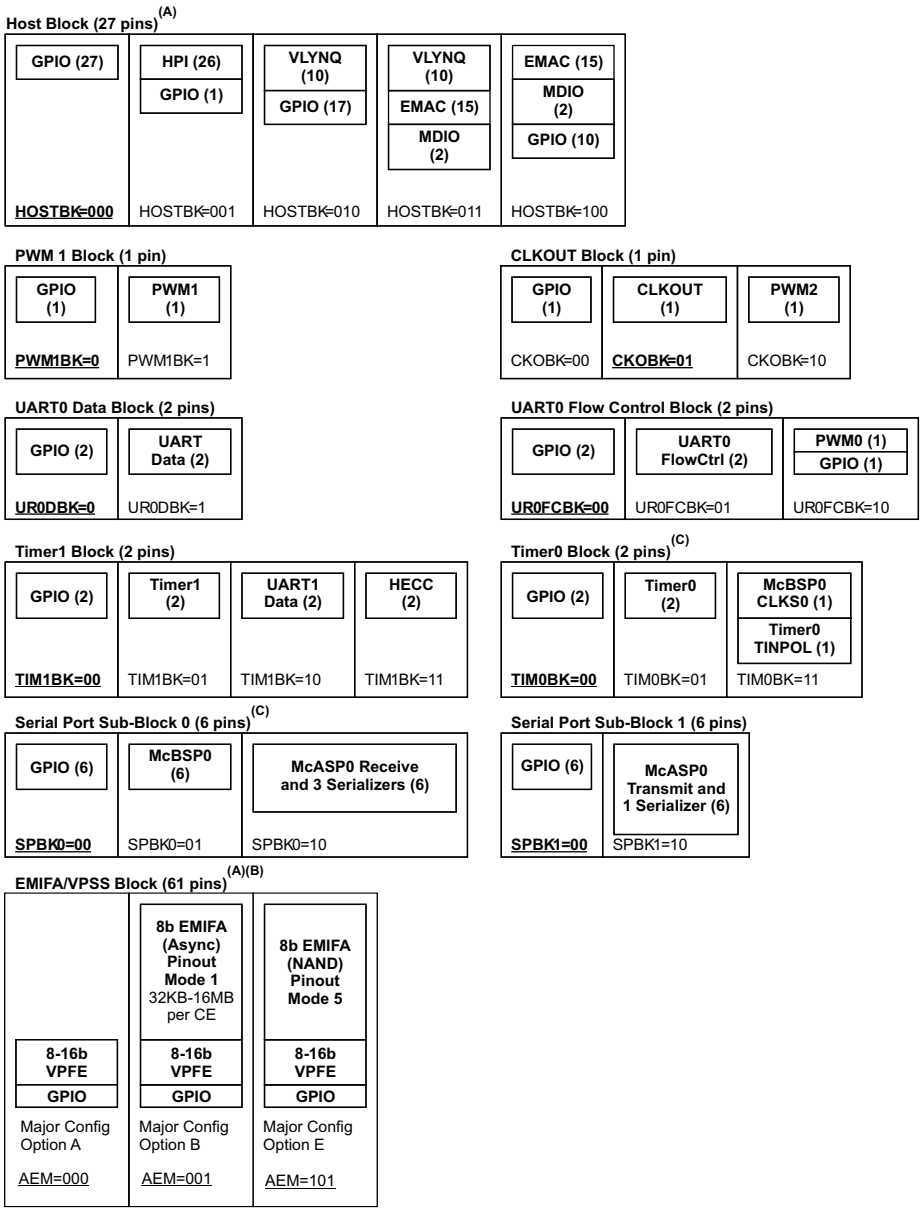

A. Default settings for PINMUX0 and PINMUX1 registers are underlined.

B. EMIFA/VPSS Block: shows the Major Config Options based on the AEM settings. Actual pin functions in the EMIFA/VPSS Block are further determined by other PINMUX fields.

C. McBSP0 pins span multiple blocks (Serial Port Sub-Block0 and Timer0 Block). Serial Port Sub-Block0 contains most of the pins needed for McBSP0 operation. Timer0 Block contains the optional external clock source input CLKS0.

Figure 3-11. Pin Mux Block Selection

3.7.1 Pin Muxing Selection At Reset

This section summarizes pin mux selection at reset.

The configuration pins AEM[2:0] and AEAW[2:0] latched at device reset determine default pin muxing for the following Pin Mux Blocks:

- EMIFA/VPSS Block: default pin mux determined by AEM[2:0] and AEAW[2:0]. **After reset, software may modify settings in the PINMUX0 register to add VPFE functionalities into this block.**
  - AEM[2:0] = 000b, AEAW[2:0] = don't care: Major Config Option A is selected. This block defaults to 61 GPIO pins.
  - AEM[2:0] = 001b, AEAW[2:0] = 000b to 100b: Major Config Option B is selected. This block defaults to 8-bit EMIFA (Async) Pinout Mode 1, plus 24-to-32 GPIO pins.
  - AEM[2:0] = 101b, AEAW[2:0] = don't care: Major Config Option E is selected. This block defaults to 8-bit EMIFA (NAND) Pinout mode 5, plus 47 GPIO pins.

For a description of the PINMUX0 and PINMUX1 registers and more details on pin muxing, see Section 3.7.2, *Pin Muxing Selection After Reset*.

3.7.2 Pin Muxing Selection After Reset

The PINMUX0 and PINMUX1 registers in the System Module allow software to select the pin functions in the Pin Mux Blocks. The pin control of some of the Pin Mux Blocks requires a combination of PINMUX0/PINMUX1 bit fields. For more details on the combination of the PINMUX bit fields that control each muxed pin, see Section 3.7.3.1, *Multiplexed Pins on DM6435*.

This section only provides an overview of the PINMUX0 and PINMUX1 registers. For more detailed discussion on how to program each Pin Mux Block, see Section 3.7.3, *Pin Multiplexing Details*.

3.7.2.1 PINMUX0 Register Description

The Pin Multiplexing 0 Register (PINMUX0) controls the pin function in the EMIFA/VPSS Block. The PINMUX0 register format is shown in Figure 3-12 and the bit field descriptions are given in Table 3-19. Some muxed pins are controlled by more than one PINMUX bit field. For the combination of the PINMUX bit fields that control each muxed pin, see Section 3.7.3.1, *Multiplexed Pins on DM6435*. For more information on EMIFA/VPSS Block pin muxing, see Section 3.7.3.11, *EMIFA/VPSS Block Muxing*. For the pin-by-pin muxing control of the EMIFA/VPSS Block, see Section 3.7.3.11.7, *EMIFA/VPSS Block Pin-By-Pin Multiplexing Summary*.

31	30	29	28	27	26	25	24	23	22	21	20	19	18	17	16
RSV	CI10SEL	RSV	CI32SEL	RSV	CI54SEL	CI76SEL	CFLDSEL	CWENSEL	HVDSEL	RSV	CCDCSEL	RSV	AEAW		
R/W-0	R/W-0	R/W-0	R/W-0	R/W-0	R/W-0	R/W-0	R/W-0	R/W-0	R/W-0	R/W-0	R/W-0	R/W-0	R/W-LLL		

15	14	13	12	11	10	9	8	7	6	5	4	3	2	1	0
RESERVED				CS3SEL		CS4SEL		CS5SEL		RESERVED			AEM		
R/W-0000				R/W-00		R/W-00		R/W-00		R/W-000			R/W-LLL		

LEGEND: R/W = Read/Write; R = Read only; L = pin state latched at reset rising edge; -*n* = value after reset
(1) For proper DM6435 device operation, ***always*** write a value of "0" to all RESERVED/RSV bits.

Figure 3-12. PINMUX0 Register— 0x01C4 0000 (1)

Table 3-19. PINMUX0 Register Description

Bit	Field Name	Description	Pins Controlled
31	RSV	Reserved. For proper device operation, the user should only write "0" to this bit (**default**).	
30	CI10SEL	CI[1:0] Function Select. 0 = No CCDC CI[1:0]. Pins function as GPIO or EMIFA based on AEM and AEAW settings (**default**). 1 = Selects CCDC [1:0] (as CCD8 and CCD9, respectively) to get at least a 10-bit CCDC. To use the 10-bit CCDC, the user ***must*** also configure PINMUX0.CCDCSEL = 1.	**Sub-Block 0** CI1(CCD9)/EM_A[19]/GP[45] CI0(CCD8)/EM_A[20]/GP[44] The combination of PINMUX0 fields AEM, AEAW, and CI10SEL bits control the pin muxing of these 2 pins. (1)
29	RSV	Reserved. For proper device operation, the user should only write "0" to this bit (**default**).	
28	CI32SEL	CI[3:2] Function Select. 0 = No CCDC CI[3:2]. Pins function as GPIO or EMIFA based on AEM and AEAW settings (**default**). 1 = Selects CCDC [3:2] (as CCD10 and CCD11, respectively) to get at least a 12-bit CCDC. To use the 12-bit CCDC, the user ***must*** also configure PINMUX0.CCDCSEL = 1 *and* PINMUX0.CI10SEL = 1.	**Sub-Block 0** CI3(CCD11)/EM_A[17]/GP[47] CI2(CCD10)/EM_A[18]/GP[46] The combination of PINMUX0 fields AEM, AEAW, and CI32SEL bits control the pin muxing of these 2 pins. (1)
27	RSV	Reserved. For proper device operation, the user should only write "0" to this bit (**default**).	
26	CI54SEL	CI[5:4] Function Select. 0 = No CCDC CI[5:4]. Pins function as GPIO or EMIFA based on AEM and AEAW settings (**default**). 1 = Selects CCDC [5:4] (as CCD12 and CCD13, respectively) to get at least a 14-bit CCDC. To use the 14-bit CCDC, the user ***must*** also configure PINMUX0.CCDCSEL = 1, PINMUX0.CI10SEL = 1, *and* PINMUX0.CI32SEL = 1.	**Sub-Block 0** CI5(CCD13)/EM_A[15]/GP[49] CI4(CCD12)/EM_A[16]/GP[48] The combination of PINMUX0 fields AEM, AEAW, and CI54SEL bits control the pin muxing of these 2 pins.(1)
25	CI76SEL	CI[7:6] Function Select. 0 = No CCDC CI[7:6]. Pins function as GPIO or EMIFA based on AEM and AEAW settings (**default**). 1 = Selects CCDC [7:6] (as CCD14 and CCD15, respectively) to get at least a 16-bit CCDC. To use the 16-bit CCDC, the user ***must*** also configure PINMUX0.CCDCSEL = 1, PINMUX0.CI10SEL = 1, PINMUX0.CI32SEL = 1, *and* PINMUX0.CI54SEL = 1.	**Sub-Block 0** CI7(CCD15)/EM_A[13]/GP[51] CI6(CCD14)/EM_A[14]/GP[50] The combination of PINMUX0 fields AEM, AEAW, and CI76SEL bits control the pin muxing of these 2 pins.(1)
24	CFLDSEL	CCDC Field Select. 0 = No CCDC Field (C_FIELD). Pin functions as EMIFA EM_A[21] or GPIO based on AEM setting (**default**). 1 = CCDC Field (C_FIELD).	**Sub-Block 0** C_FIELD/EM_A[21]/GP[34] The combination of PINMUX0/1 fields CFLDSEL and AEM control the muxing of this pin. (1)
23	CWENSEL	CCDC Write Enable Select. 0 = No CCDC Write Enable. Pin functions as EMIFA EM_R/$\overline{W}$ or GPIO based on AEM setting (**default**). 1 = CCDC Write Enable (C_WE). Pin functions as CCDC Write Enable C_WE. Applicable *only* for AEM = 0 (000b) *or* 5 (101b).	**Sub-Block 0** C_WE/EM_R/$\overline{W}$/GP[35] The combination of PINMUX0 fields CWENSEL and AEM control the muxing of this pin. (1)
22	HVDSEL	CCDC HD and VD Select. 0 = No CCDC HD and VD. Pins function as GPIO (GP[53] and GP[52]) (**default**). 1 = CCDC HD and VD.	**Sub-Block 0** VD/GP[53] HD/GP[52] The PINMUX0 field HVDSEL alone controls the muxing of these 2 pins.
21	RSV	Reserved. For proper device operation, the user should only write "0" to this bit (**default**).	

(1) For the full set of valid configurations of these pins, see Section 3.7.3.11.7, *EMIFA/VPSS Block Pin-By-Pin Multiplexing Summary*.

Table 3-19. PINMUX0 Register Description (continued)

Bit	Field Name	Description	Pins Controlled
20	CCDCSEL	CCDC Select. This bit field determines if CCDC is supported or not. 0 = CCDC *not* supported. Pins function as GPIO (GP[54] and GP[43:36]) (**default**). 1 = CCDC supported. Pins function as CCDC PCLK, YI[7:0].	**Sub-Block 0** PCLK/GP[54] YI7(CCD7)/GP[43] YI6(CCD6)/GP[42] YI5(CCD5)/GP[41] YI4(CCD4)/GP[40] YI3(CCD3)/GP[39] YI2(CCD2)/GP[38] YI1(CCD1)/GP[37] YI0(CCD0)/GP[36] The PINMUX0 field CCDCSEL alone controls the muxing of these 9 pins.
19	RSV	Reserved. For proper device operation, the user should only write "0" to this bit (**default**).	
18:16	AEAW(1)	8-bit EMIFA (Async) Pinout Mode 1 Address Width Select *or* Fast Boot PLL Multiplier Select This field serves two purposes: 1. If AEM = 001b, this field serves as the 8-bit EMIFA (Async) Pinout Mode 1 Address Width Select. 2. If FASTBOOT = 1 *and* AEM = 0 (000b) *or* 5 (101b), this field serves as the *Fastboot PLL Multiplier Select*. ***Fastboot PLL Multiplier Select:*** For more details on the AEAW pin functions as Fastboot PLL Multiplier Select, see Section 3.4.1, *Bootmodes*. ***EMIFA Address Width Select:*** 000b = EMIFA (Async) pinout supports *only* EM_A[12:0] address pins. EMIFA (Async) signals EM_A[20:13] ***are not*** pinned out. PINMUX bit fields CI76SEL, CI54SEL, CI32SEL, and CI10SEL determine the function of these 8 pins. 001b = EMIFA (Async) pinout supports *only* EM_A[14:0] address pins. EMIFA (Async) signals EM_A[14:13] ***are*** pinned out. PINMUX0 bit field CI76SEL ***must*** be programmed to 0. EMIFA (Async) signals EM_A[20:15] ***are not*** pinned out. PINMUX0 bit fields CI54SEL, CI32SEL, and CI10SEL determine the function of these 6 pins. 010b = EMIFA (Async) pinout supports *only* address pins EM_A[16:0]. EMIFA (Async) signals EM_A[16:13] ***are*** pinned out. PINMUX0 bit fields CI76SEL and CI54SEL ***must*** be programmed to 0. EMIFA (Async) signals EM_A[20:17] ***are not*** pinned out. PINMUX0 bit fields CI32SEL and CI10SEL determine the function of these 4 pins. 011b = EMIFA (Async) pinout supports *only* address pins EM_A[18:0]. EMIFA (Async) signals EM_A[18:13] ***are*** pinned out. PINMUX0 bit fields CI76SEL, CI54SEL, and CI32SEL ***must*** be programmed to 0. EMIFA (Async) signals EM_A[20:19] ***are not*** pinned out. PINMUX0 bit field CI10SEL determines the function of these 2 pins. 100b = EMIFA (Async) pinout supports address pins EM_A[20:0]. EMIFA (Async) signals EM_A[20:13] ***are*** pinned out. PINMUX0 bit fields CI76SEL, CI54SEL, CI32SEL, and CI10SEL ***must*** be programmed to 0. 101b through 111b = Reserved.	**Sub-Block 0** CI7(CCD15)/EM_A[13]/GP[51] CI6(CCD14)/EM_A[14]/GP[50] CI5(CCD13)/EM_A[15]/GP[49] CI4(CCD12)/EM_A[16]/GP[48] CI3(CCD11)/EM_A[17]/GP[47] CI2(CCD10)/EM_A[18]/GP[46] CI1(CCD9)/EM_A[19]/GP[45] CI0(CCD8)/EM_A[20]/GP[44] The combination of PINMUX0 fields AEM, AEAW, CI10SEL, CI32SEL, CI54SEL, and CI76SEL control the muxing of these 8 pins. (2)
15:12	RESERVED	Reserved. For proper device operation, the user should only write "0" to these bits (**default**).	
11:10	CS3SEL	Chip Select 3 Select. 00 = GPIO pin (GP13) (**default**) 01 = EMIFA Chip Select 3 ($\overline{\text{EM\_CS3}}$) 10 = Reserved 11 = Reserved	**Sub-Block 1** $\overline{\text{EM\_CS3}}$/GP[13] The PINMUX0 field CS3SEL alone controls the muxing of this pin.

(1) The AEAW default value is latched at reset from AEAW[2:0] configuration inputs. The latched values are also shown at BOOTCFG.PLLMS (*read-only*).
(2) For the full set of valid configurations of these pins, see Section 3.7.3.11.7, *EMIFA/VPSS Block Pin-By-Pin Multiplexing Summary*.

Table 3-19. PINMUX0 Register Description (continued)

Bit	Field Name	Description	Pins Controlled
9:8	CS4SEL	Chip Select 4 Select. 00 = GPIO pin (GP32) (**default**) 01 = EMIFA Chip Select 4 ($\overline{\text{EM\_CS4}}$) 10 = Reserved 11 = Reserved	**Sub-Block 1** $\overline{\text{EM\_CS4}}$/GP[32] The PINMUX0 field CS4SEL alone controls the muxing of this pin.
7:6	CS5SEL	Chip Select 5 Select. 00 = GPIO pin (GP33) (**default**) 01 = EMIFA Chip Select 5 ($\overline{\text{EM\_CS5}}$) 10 = Reserved 11 = Reserved	**Sub-Block 1** $\overline{\text{EM\_CS5}}$/GP[33] The PINMUX0 field CS5SEL alone controls the muxing of this pin.
5:3	RESERVED	Reserved. For proper device operation, the user should only write "0" to these bits (**default**).	
2:0	AEM [(1)]	**EMIFA Pinout Modes** This field ***does not*** affect the actual EMIFA operation. It only determines what multiplexed pins in the EMIFA/VPSS Block serves as EMIFA pins. 000b = **No EMIFA Mode**. None of the multiplexed pins in the EMIFA/VPSS Block serves as EMIFA pins. 001b = **8-bit EMIFA (Async) Pinout Mode 1**. (Up to 16M-Byte address reach per Chip Select Space). Pinout allows up to a maximum of these functions from EMIFA/VPSS Block: 8-bit EMIFA (Async or NAND) + 16-bit CCDC (VPFE) 010b = **Reserved**. 011b = **Reserved**. 100b = **Reserved**. 101b = **8-bit EMIFA (NAND) Pinout Mode 5**. Pinout allows up to a maximum of these functions from EMIFA/VPSS Block: 8-bit EMIFA (NAND) + 16-bit CCDC (VPFE) 110b through 111b = Reserved.	**Sub-Block 0** C_WE/EM_R/$\overline{\text{W}}$/GP[35] C_FIELD/EM_A[21]/GP[34] CI7(CCD15)/EM_A[13]/GP[51] CI6(CCD14)/EM_A[14]/GP[50] CI5(CCD13)/EM_A[15]/GP[49] CI4(CCD12)/EM_A[16]/GP[48] CI3(CCD11)/EM_A[17]/GP[47] CI2(CCD10)/EM_A[18]/GP[46] CI1(CCD9)/EM_A[19]/GP[45] CI0(CCD8)/EM_A[20]/GP[44] **Sub-Block 1** EM_D[7]/GP[21] EM_D[6]/GP[20] EM_D[5]/GP[19] EM_D[4]/GP[18] EM_D[3]/GP[17] EM_D[2]/GP[16] EM_D[1]/GP[15] EM_D[0]/GP[14] $\overline{\text{EM\_CS2}}$/GP[12] EM_A[3]/GP[11] EM_A[4]/GP[10]/(AEAW2/PLLMS2) EM_A[1]/(ALE)/GP[9]/(AEAW1/PLLMS1) EM_A[2]/(CLE)/GP[8]/(AEAW0/PLLMS0) EM_A[0]/GP[7]/(AEM2) EM_BA[0]/GP[6]/(AEM1) EM_BA[1]/GP[5]/(AEM0) **Sub-Block3** EM_A[12]/GP[89] EM_A[11]/GP[90] EM_A[10]/GP[91] EM_A[9]/GP[92] EM_A[8]/GP[93] EM_A[7]/GP[94] EM_A[6]/GP[95] EM_A[5]/GP[96] The pin mux for these pins are controlled by a combination of AEM and other PINMUX0 fields, including CWENSEL, CFLDSEL, AEAW, CI76SEL, CI54SEL, CI32SEL, and CI10SEL. [(2)]

(1) The AEM default value is latched at reset from AEM[2:0] configuration inputs. The latched values are also shown at BOOTCFG.DAEM (*read-only*).
(2) For the full set of valid configurations of these pins, see Section 3.7.3.11.7, *EMIFA/VPSS Block Pin-By-Pin Multiplexing Summary*.

3.7.2.2 PINMUX1 Register Description

The Pin Multiplexing 1 Register (PINMUX1) controls the pin multiplexing of all Pin Mux Blocks. The PINMUX1 register format is shown in Figure 3-13 and the bit field descriptions are given in Table 3-20. Some muxed pins are controlled by more than one PINMUX bit field. For the combination of PINMUX bit fields that control each muxed pin, see Section 3.7.3.1, *Multiplexed Pins on DM6435*.

31–26	25–24	23–22	21–20	19–18	17–16
RESERVED	SPBK1	SPBK0	TIM1BK	RSV	TIM0BK
R/W-0000 00	R/W-00	R/W-00	R/W-00	R/W-00	R/W-00

15–14	13	12	11–10	9	8	7	6–5	4–3	2–1	0
CKOBK	RSV	PWM1BK	UR0FCBK	RSV	UR0DBK	RSV	HOSTBK	RESERVED		RSV
R/W-01	R/W-0	R/W-0	R/W-00	R/W-0	R/W-0	R/W-0	R/W-000	R/W-000		R-0

LEGEND: R/W = Read/Write; R = Read only; P = specified pin state; *-n* = value after reset
(1) For proper DM6435 device operation, ***always*** write a value of "0" to all RESERVED/RSV bits.

Figure 3-13. PINMUX1 Register— 0x01C4 0004 (1)

Table 3-20. PINMUX1 Register Description

Bit	Field Name	Description	Pins Controlled
31:26	RESERVED	Reserved. For proper device operation, the user should only write "0" to this bit (**default**).	–
25:24	SPBK1	Serial Port Sub-Block 1 Pin Select. Selects the function of the multiplexed pins in the Serial Port Sub-Block 1. 00 = GPIO Mode (**default**). Pins function as GPIO (GP[110:105]). 01 = Reserved. 10 = McASP0 Transmit and 1 serializer. Pins function as McASP0: AXR0[0], ACLKX0, AFSX0, AHCLKX0, AMUTEIN0, and AMUTE0. 11 = Reserved.	**Serial Port Sub-Block 1:** AXR0[0]/GP[105] ACLKX0/GP[106] AFSX0/GP[107] AHCLKX0/GP[108] AMUTEIN0/GP[109] AMUTE0/GP[110]
23:22	SPBK0	Serial Port Sub-Block 0 Pin Select. Selects the function of the multiplexed pins in the Serial Port Sub-Block 0. 00 = GPIO Mode (**default**). Pins function as GPIO (GP[104:99]). 01 = McBSP0 Mode. Pins function as McBSP0 CLKX0, FSX0, DX0, CLKR0, FSR0, and DR0. 10 = McASP0 Receive and 3 serializers. Pins function as McASP0 ACLKR0, AFSR0, AHCLKR0, AXR0_3, AXR0_2, and AXR0_1. 11 = Reserved	**Serial Port Sub-Block 0:** ACLKR0/CLKX0/GP[99] AFSR0/DR0/GP[100] AHCLKR0/CLKR0/GP[101] AXR0[3]/FSR0/GP[102] AXR0[2]/FSX0/GP[103] AXR0[1]/DX0/GP[104]
21:20	TIM1BK	Timer1 Block Pin Select. Selects the function of the multiplexed pins in theTimer1 Block. 00 = GPIO Mode (**default**). Pins function as GPIO (GP[56:55]). 01 = Timer1 Mode. Pins function as Timer1 TINP1L and TOUT1L. 10 = UART1 Data Mode. Pins function as UART1 data pins URXD1 and UTXD1. 11 = HECC Mode. Pins function as HECC HECC_RX and HECC_TX.	**Timer1 Block:** HECC_RX/TINP1L/URXD1/GP[56] HECC_TX/TOUT1L/UTXD1/GP[55]
19:18	RSV	Reserved. For proper device operation, the user should only write "0" to this bit (**default**).	–

Table 3-20. PINMUX1 Register Description (continued)

Bit	Field Name	Description	Pins Controlled
17:16	TIM0BK	Timer0 Block Pin Select. Selects the function of the multiplexed pins in the Timer0 Block. 00 = GPIO Mode (**default**). Pins function as GPIO (GP[98:97]). 01 = Timer0 Mode. Pins function as Timer0 TINP0L and TOUT0L. 10 =Reserved. 11 = McBSP0 External Clock Source + Timer0 Input Mode. Pins function as McBSP0 external clock source CLKS0, and Timer0 input TINP0L.	**Timer0 Block:** TINP0L/GP[98] CLKS0/TOUT0L/GP[97]
15:14	CKOBK	CLKOUT Block Pin Select. Selects the function of the multiplexed pins in the CLKOUT Block. 00 = GPIO Mode. Pin functions as GPIO (GP[84]). 01 = CLKOUT Mode (**default**). Pin functions as device clock output CLKOUT0, sourced from PLLC1 OBSCLK. 10 = PWM2 Mode. Pin functions as PWM2. 11 = Reserved	**CLKOUT Block:** CLKOUT0/PWM2/GP[84]
13	RSV	Reserved. For proper device operation, the user should only write "0" to this bit (**default**).	–
12	PWM1BK	PWM1 Block Pin Select. Selects the function of the multiplexed pins in the PWM1 Block. 0 = GPIO Mode (**default**). Pin functions as GPIO (GP[4]). 1 = PWM1 Mode. Pin functions as PWM1.	**PWM1 Block:** GP[4]/PWM1
11:10	UR0FCBK	UART0 Flow Control Block Pin Select. Selects the function of the multiplexed pins in the UART0 Flow Control Block. 00 = GPIO Mode (**default**). Pins function as GPIO (GP[88:87]). 01 = UART0 Flow Control Mode. Pins function as UART0 Flow Control UCTS0 and URTS0. 10 = PWM0 + GPIO Mode. Pins function as PWM0 and GPIO (GP[87]). 11 = Reserved	**UART0 Flow Control Block:** UCTS0/GP[87] URTS0/PWM0/GP[88]
9	RSV	Reserved. For proper device operation, the user should only write "0" to this bit (**default**).	–
8	UR0DBK	UART0 Data Block Pin Select. Selects the function of the multiplexed pins in the UART0 Data Block. 0 = GPIO Mode (**default**). Pins function as GPIO (GP[86:85]). 1 = UART0 Data Mode. Pins function as UART0 data URXD0 and UTXD0.	**UART0 Data Block:** URXD0/GP[85] UTXD0/GP[86]

Table 3-20. PINMUX1 Register Description (continued)

Bit	Field Name	Description	Pins Controlled
7	RSV	Reserved. For proper device operation, the user should only write "0" to this bit (**default**).	–
6:4	HOSTBK	Host Block Pin Select. **If EMAC opertaion is desired, EMAC must be placed in reset before programminng PINMUX1 HOSTBK to select EMAC pins.** HOSTBK = 000: GPIO Mode (**default**). Pins function as GPIO (GP[83:57]). HOSTBK = 001: HPI + 1 GPIO Mode. Pins function as HPI and GPIO (GP[57]). HOSTBK = 010: VLYNQ + 17 GPIO Mode. Pins function as VLYNQ (VLYNQ_CLOCK, VLYNQ_SCRUN, VLYNQ_RXD[3:0], VLYNQ_TXD[3:0]), and GP[83:67]. HOSTBK = 011: VLYNQ + MII + MDIO Mode. Pins function as VLYNQ (VLYNQ_CLOCK, VLYNQ_SCRUN, VLYNQ_RXD[3:0], VLYNQ_TXD[3:0]), MII (TXCLK, CRS, COL, TXD[3:0], RXVD, TXEN, RXER, RXCLK, RXD[3:0]), and MDIO (MDIO, MDC). HOSTBK = 100: MII + MDIO +10 GPIO Mode. Pins function as MII (TXCLK, CRS, COL, TXD[3:0], RXVD, TXEN, RXER, RXCLK, RXD[3:0]), MDIO (MDIO, MDC), and GP[66:57]. All other HOSTBK combinations reserved.	**Host Block:** VLYNQ_CLOCK/GP[57] HD0/VLYNQ_SCRUN/GP[58] HD1/VLYNQ_RXD0/GP[59] HD2/VLYNQ_RXD1/GP[60] HD3/VLYNQ_RXD2/GP[61] HD4/VLYNQ_RXD3/GP[62] HD5/VLYNQ_TXD0/GP[63] HD6/VLYNQ_TXD1/GP[64] HD7/VLYNQ_TXD2/GP[65] HD8/VLYNQ_TXD3/GP[66] HD9/MCOL/GP[67] HD10/MCRS/GP[68] HD11/MTXD3/GP[69] HD12/MTXD2/GP[70] HD13/MTXD1/GP[71] HD14/MTXD0/GP[72] HD15/MTXCLK/GP[73] HHWIL/MRXDV/GP[74] HCNTL1/MTXEN/GP[75] HCNTL0/MRXER/GP[76] HR/$\overline{\text{W}}$/MRXCLK/GP[77] $\overline{\text{HDS2}}$/MRXD0/GP[78] $\overline{\text{HDS1}}$/MRXD1/GP[79] $\overline{\text{HRDY}}$/MRXD2/GP[80] $\overline{\text{HCS}}$/MDCLK/GP[81] $\overline{\text{HINT}}$/MRXD3/GP[82] $\overline{\text{HAS}}$/MDIO/GP[83]
3:1	RESERVED	Reserved. For proper device operation, the user should only write "0" to this bit (**default**).	–
0	RSV	Reserved. Writes have no effect.	–

3.7.3 Pin Multiplexing Details

This section discusses how to program each Pin Mux Block to select the desired peripheral functions.

The following steps can be used to determine pin muxing suitable for the application:

1. Understand the major configuration choices available for the specific application.
   a. Device Major Configuration Choices: Figure 3-11 shown in Section 3.7, *Multiplexed Pin Configurations*, provides a high-level view of the device pin muxing and can be used to determine the possible mix of peripheral options for a specific application.
   b. EMIFA/VPSS Block Major Configuration Choices: The EMIFA/VPSS block features extensive pin multiplexing to accommodate a variety of applications. In addition to Figure 3-11, Section 3.7.3.11, *EMIFA/VPSS Block Muxing*, provides more details on the Major Configuration choices for this block.
2. See Section 3.7.3.1, *Multiplexed Pins on DM6435*, for a summary of all the multiplexed pins on this device and the pin mux group they belong to.
3. Refer to the individual pin mux sections (Section 3.7.3.3, *Host Block Muxing* to Section 3.7.3.11, *EMIFA/VPSS Block Muxing*) for pin muxing details for a specific pin mux block.
   a. For peripherals that span multiple pin mux blocks, the user must select the appropriate pins for that peripheral in all relevant pin mux blocks. For more details, see Section 3.7.3.2, *Peripherals Spanning Multiple Pin Mux Blocks* .

For details on PINMUX0 and PINMUX1 registers, see Section 3.7.2.

3.7.3.1 Multiplexed Pins on DM6435

Table 3-21 summarizes all of the multiplexed pins on DM6435, the pin mux group for each pin, and the PINMUX register fields that control the pin. For pin mux details, see the specific pin mux group section (Section 3.7.3.3, *Host Block Muxing* to Section 3.7.3.11, *EMIFA/VPSS Block Muxing*). For a description of the PINMUX register fields, see Section 3.7.2.

Table 3-21. Multiplexed Pins on DM6435

SIGNAL			PINMUX DESCRIPTION	
NAME	ZWT NO.	ZDU NO.	PINMUX GROUP	CONTROLLED BY PINMUX BIT FIELDS
PCLK/GP[54]	A14	A18	EMIFA/VPSS Sub-Block 0	CCDCSEL
VD/GP[53]	A13	A17	EMIFA/VPSS Sub-Block 0	HVDSEL
HD/GP[52]	A15	A19	EMIFA/VPSS Sub-Block 0	HVDSEL
CI7(CCD15)/EM_A[13]/GP[51]	B10	A12	EMIFA/VPSS Sub-Block 0	AEM, AEAW, CI76SEL
CI6(CCD14)/EM_A[14]/GP[50]	A10	A13	EMIFA/VPSS Sub-Block 0	AEM, AEAW, CI76SEL
CI5(CCD13)/EM_A[15]/GP[49]	B11	C13	EMIFA/VPSS Sub-Block 0	AEM, AEAW, CI54SEL
CI4(CCD12)/EM_A[16]/GP[48]	C11	B13	EMIFA/VPSS Sub-Block 0	AEM, AEAW, CI54SEL
CI3(CCD11)/EM_A[17]/GP[47]	A11	B14	EMIFA/VPSS Sub-Block 0	AEM, AEAW, CI32SEL
CI2(CCD10)/EM_A[18]/GP[46]	D11	A14	EMIFA/VPSS Sub-Block 0	AEM, AEAW, CI32SEL
CI1(CCD9)/EM_A[19]/GP[45]	B12	C14	EMIFA/VPSS Sub-Block 0	AEM, AEAW, CI10SEL
CI0(CCD8)/EM_A[20]/GP[44]	C12	C15	EMIFA/VPSS Sub-Block 0	AEM, AEAW, CI10SEL
YI7(CCD7)/GP[43]	A12	A15	EMIFA/VPSS Sub-Block 0	CCDCSEL
YI6(CCD6)/GP[42]	B13	B15	EMIFA/VPSS Sub-Block 0	CCDCSEL
YI5(CCD5)/GP[41]	C13	B16	EMIFA/VPSS Sub-Block 0	CCDCSEL
YI4(CCD4)/GP[40]	D14	C18	EMIFA/VPSS Sub-Block 0	CCDCSEL
YI3(CCD3)/GP[39]	B14	A16	EMIFA/VPSS Sub-Block 0	CCDCSEL
YI2(CCD2)/GP[38]	C14	B17	EMIFA/VPSS Sub-Block 0	CCDCSEL
YI1(CCD1)/GP[37]	B15	B18	EMIFA/VPSS Sub-Block 0	CCDCSEL
YI0(CCD0)/GP[36]	C15	B19	EMIFA/VPSS Sub-Block 0	CCDCSEL

Table 3-21. Multiplexed Pins on DM6435 (continued)

SIGNAL			PINMUX DESCRIPTION	
NAME	ZWT NO.	ZDU NO.	PINMUX GROUP	CONTROLLED BY PINMUX BIT FIELDS
C_WE/EM_R/$\overline{W}$/GP[35]	D13	C17	EMIFA/VPSS Sub-Block 0	AEM, CWENSEL
C_FIELD/EM_A[21]/GP[34]	D12	C16	EMIFA/VPSS Sub-Block 0	AEM, CFLDSEL
$\overline{EM\_CS5}$/GP[33]	F19	J22	EMIFA/VPSS Sub-Block 1	CS5SEL
$\overline{EM\_CS4}$/GP[32]	E19	H22	EMIFA/VPSS Sub-Block 1	CS4SEL
GP[31]	D19	G22	EMIFA/VPSS Sub-Block 1	–(1)
GP[30]	G19	K22	EMIFA/VPSS Sub-Block 1	–(1)
GP[29]	H15	K21	EMIFA/VPSS Sub-Block 1	–(1)
GP[28]	H16	J21	EMIFA/VPSS Sub-Block 1	–(1)
GP[27]	H17	L19	EMIFA/VPSS Sub-Block 1	–(1)
GP[26]/(FASTBOOT)	G17	K19	EMIFA/VPSS Sub-Block 1	–(1)
GP[25]/(BOOTMODE3)	G16	H21	EMIFA/VPSS Sub-Block 1	–(1)
GP[24]/(BOOTMODE2)	G15	L20	EMIFA/VPSS Sub-Block 1	–(1)
GP[23]/(BOOTMODE1)	F15	K20	EMIFA/VPSS Sub-Block 1	–(1)
GP[22]/(BOOTMODE0)	F18	J20	EMIFA/VPSS Sub-Block 1	–(1)
EM_D[7]/GP[21]	F17	H20	EMIFA/VPSS Sub-Block 1	AEM
EM_D[6]/GP[20]	F16	F21	EMIFA/VPSS Sub-Block 1	AEM
EM_D[5]/GP[19]	E17	F22	EMIFA/VPSS Sub-Block 1	AEM
EM_D[4]/GP[18]	E18	G21	EMIFA/VPSS Sub-Block 1	AEM
EM_D[3]/GP[17]	E16	F20	EMIFA/VPSS Sub-Block 1	AEM
EM_D[2]/GP[16]	D17	E22	EMIFA/VPSS Sub-Block 1	AEM
EM_D[1]/GP[15]	D18	G20	EMIFA/VPSS Sub-Block 1	AEM
EM_D[0]/GP[14]	D16	E21	EMIFA/VPSS Sub-Block 1	AEM
$\overline{EM\_CS3}$/GP[13]	C18	D22	EMIFA/VPSS Sub-Block 1	CS3SEL
$\overline{EM\_CS2}$/GP[12]	C19	C22	EMIFA/VPSS Sub-Block 1	AEM
EM_A[3]/GP[11]	B18	D21	EMIFA/VPSS Sub-Block 1	AEM
EM_A[4]/GP[10]/(AEAW2/PLLMS2)	A17	B21	EMIFA/VPSS Sub-Block 1	AEM
EM_A[1]/(ALE)/GP[9]/ (AEAW1/PLLMS1)	A16	B20	EMIFA/VPSS Sub-Block 1	AEM
EM_A[2]/(CLE)/GP[8]/ (AEAW0/PLLMS0)	B16	A20	EMIFA/VPSS Sub-Block 1	AEM
EM_A[0]/GP[7]/(AEM2)	B17	C21	EMIFA/VPSS Sub-Block 1	AEM
EM_BA[0]/GP[6]/(AEM1)	C17	E20	EMIFA/VPSS Sub-Block 1	AEM
EM_BA[1]/GP[5]/(AEM0)	C16	C20	EMIFA/VPSS Sub-Block 1	AEM
EM_A[12]/GP[89]	D10	B12	EMIFA/VPSS Sub-Block 3	AEM
EM_A[11]/GP[90]	C10	C12	EMIFA/VPSS Sub-Block 3	AEM
EM_A[10]/GP[91]	A9	B11	EMIFA/VPSS Sub-Block 3	AEM
EM_A[9]/GP[92]	D9	C11	EMIFA/VPSS Sub-Block 3	AEM
EM_A[8]/GP[93]	B9	A11	EMIFA/VPSS Sub-Block 3	AEM
EM_A[7]/GP[94]	C9	C10	EMIFA/VPSS Sub-Block 3	AEM
EM_A[6]/GP[95]	D8	B10	EMIFA/VPSS Sub-Block 3	AEM
EM_A[5]/GP[96]	B8	A10	EMIFA/VPSS Sub-Block 3	AEM
VLYNQ_CLOCK/GP[57]	A7	A8	Host Block	HOSTBK
HD0/VLYNQ_SCRUN/GP[58]	C8	B9	Host Block	HOSTBK
HD1/VLYNQ_RXD0/GP[59]	D7	C9	Host Block	HOSTBK

(1) GP[31:22] are standalone pins. They are not muxed with any other functions, but they are included in this table because they are grouped in the EMIFA/VPSS Sub-Block 1.

Table 3-21. Multiplexed Pins on DM6435 (continued)

SIGNAL			PINMUX DESCRIPTION	
NAME	ZWT NO.	ZDU NO.	PINMUX GROUP	CONTROLLED BY PINMUX BIT FIELDS
HD2/VLYNQ_RXD1/GP[60]	A8	A9	Host Block	HOSTBK
HD3/VLYNQ_RXD2/GP[61]	B7	B8	Host Block	HOSTBK
HD4/VLYNQ_RXD3/GP[62]	C7	C8	Host Block	HOSTBK
HD5/VLYNQ_TXD0/GP[63]	A6	A7	Host Block	HOSTBK
HD6/VLYNQ_TXD1/GP[64]	D6	C7	Host Block	HOSTBK
HD7/VLYNQ_TXD2/GP[65]	B6	B7	Host Block	HOSTBK
HD8/VLYNQ_TXD3/GP[66]	A5	A6	Host Block	HOSTBK
HD9/MCOL/GP[67]	C6	C6	Host Block	HOSTBK
HD10/MCRS/GP[68]	B5	B6	Host Block	HOSTBK
HD11/MTXD3/GP[69]	C5	A5	Host Block	HOSTBK
HD12/MTXD2/GP[70]	D5	C5	Host Block	HOSTBK
HD13/MTXD1/GP[71]	B4	B4	Host Block	HOSTBK
HD14/MTXD0/GP[72]	D4	B5	Host Block	HOSTBK
HD15/MTXCLK/GP[73]	A4	A4	Host Block	HOSTBK
HHWIL/MRXDV/GP[74]	C4	D3	Host Block	HOSTBK
HCNTL1/MTXEN/GP[75]	D3	C4	Host Block	HOSTBK
HCNTL0/MRXER/GP[76]	B3	B2	Host Block	HOSTBK
HR/$\overline{\text{W}}$/MRXCLK/GP[77]	A3	A3	Host Block	HOSTBK
$\overline{\text{HDS2}}$/MRXD0/GP[78]	C3	C2	Host Block	HOSTBK
$\overline{\text{HDS1}}$/MRXD1/GP[79]	B2	B3	Host Block	HOSTBK
$\overline{\text{HRDY}}$/MRXD2/GP[80]	D2	C3	Host Block	HOSTBK
$\overline{\text{HCS}}$/MDCLK/GP[81]	C1	D1	Host Block	HOSTBK
$\overline{\text{HINT}}$/MRXD3/GP[82]	C2	D2	Host Block	HOSTBK
$\overline{\text{HAS}}$/MDIO/GP[83]	D1	C1	Host Block	HOSTBK
GP[4]/PWM1	F3	F3	PWM1Block	PWM1BK
ACLKR0/CLKX0/GP[99]	H1	J1	Serial Port Sub-Block 0	SPBK0
AFSR0/DR0/GP[100]	H4	K3	Serial Port Sub-Block 0	SPBK0
AHCLKR0/CLKR0/GP[101]	J2	K1	Serial Port Sub-Block 0	SPBK0
AXR0[3]/FSR0/GP[102]	G4	J3	Serial Port Sub-Block 0	SPBK0
AXR0[2]/FSX0/GP[103]	H3	J2	Serial Port Sub-Block 0	SPBK0
AXR0[1]/DX0/GP[104]	J3	K2	Serial Port Sub-Block 0	SPBK0
AXR0[0]/GP[105]	H2	H2	Serial Port Sub-Block 1	SPBK1
ACLKX0/GP[106]	F1	G1	Serial Port Sub-Block 1	SPBK1
AFSX0/GP[107]	G2	G2	Serial Port Sub-Block 1	SPBK1
AHCLKX0/GP[108]	G1	H1	Serial Port Sub-Block 1	SPBK1
AMUTEIN0/GP[109]	F2	G3	Serial Port Sub-Block 1	SPBK1
AMUTE0/GP[110]	G3	H3	Serial Port Sub-Block 1	SPBK1
HECC_RX/TINP1L/URXD1/GP[56]	L4	P3	Timer 1 Block	TIM1BK
HECC_TX/TOUT1L/UTXD1/GP[55]	K4	N3	Timer 1 Block	TIM1BK
TINP0L/GP[98]	K2	L2	Timer 0 Block	TIM0BK
CLKS0/TOUT0L/GP[97]	J4	L3	Timer 0 Block	TIM0BK
URXD0/GP[85]	L2	M2	UART0 Data Block	UR0DBK
UTXD0/GP[86]	K3	N1	UART0 Data Block	UR0DBK
UCTS0/GP[87]	L1	P1	UART0 Flow Control Block	UR0FCBK
URTS0/PWM0/GP[88]	L3	M3	UART0 Flow Control Block	UR0FCBK

Table 3-21. Multiplexed Pins on DM6435 (continued)

SIGNAL			PINMUX DESCRIPTION	
NAME	ZWT NO.	ZDU NO.	PINMUX GROUP	CONTROLLED BY PINMUX BIT FIELDS
CLKOUT0/PWM2/GP[84]	M1	R1	CLKOUT Block	CKOBK

Note: PINMUX group EMIFA/VPSS Sub-Block 2 is not shown in the above table because there is no actual pin multiplexing in that block. But this block is still considered a "pin mux block" because it contains some of the pins necessary for EMIFA. The pins in this block are as follows:

- **EMIFA/VPSS Sub-Block 2**
  - EM_WAIT/(RDY/$\overline{\text{BSY}}$)
  - $\overline{\text{EM\_OE}}$
  - $\overline{\text{EM\_WE}}$

3.7.3.2 Peripherals Spanning Multiple Pin Mux Blocks

Some peripherals span multiple Pin Mux Blocks. To use these peripherals, they must be selected in all of the relevant Pin Mux Blocks. The following is the list of peripherals that span multiple Pin Mux Blocks:

- **McBSP0:** Six McBSP0 pins are located in the Serial Port Sub-Block 0, but the CLKS0 pin is muxed in the Timer0 Block. To select McBSP0 pins, program PINMUX registers as follows:
  - **Serial Port Sub-Block 0:** SPBK0 = 01
  - **Timer0 Block:** If CLKS0 pin is desired, program TIM0BK = 10 or 11.
- **UART0:** The two UART0 data pins are located in the UART0 Data Block, but the two UART0 flow control pins are located in the UART0 Flow Control Block. To select UART0, program PINMUX registers as follows:
  - **UART0 Data Block:** UR0BK = 1
  - **UART0 Flow Control Block:** If flow control pins are desired, program UR0FCBK = 01.

3.7.3.3 Host Block Muxing

This block of 27 pins consists of HPI, VLYNQ, EMAC, MDIO, and GPIO muxed pins. The following register field selects the pin functions in the Host Block:

- PINMUX1.HOSTBK

Table 3-22 summarizes the 27 pins in the Host Block, the multiplexed function on each pin, and the PINMUX configurations to select the corresponding function.

Table 3-22. Host Block Muxed Pins Selection

SIGNAL NAME	MULTIPLEXED FUNCTIONS							
	HPI		EMAC/MDIO		VLYNQ		GPIO	
	FUNCTION	SELECT	FUNCTION	SELECT	FUNCTION	SELECT	FUNCTION	SELECT
VLYNQ_CLOCK/GP[57]	–	–	–	–	VLYNQ_CLOCK	HOSTBK = 010 or HOSTBK = 011	GP[57]	HOSTBK = 000 or HOSTBK = 001 or HOSTBK = 100
HD0/VLYNQ_SCRUN/GP[58]	HD0	HOSTBK = 001	–	–	VLYNQ_SCRUN		GP[58]	HOSTBK = 000 or HOSTBK = 100
HD1/VLYNQ_RXD0/GP[59]	HD1		–	–	VLYNQ_RXD0		GP[59]	
HD2/VLYNQ_RXD1/GP[60]	HD2		–	–	VLYNQ_RXD1		GP[60]	
HD3/VLYNQ_RXD2/GP[61]	HD3		–	–	VLYNQ_RXD2		GP[61]	
HD4/VLYNQ_RXD3/GP[62]	HD4		–	–	VLYNQ_RXD3		GP[62]	
HD5/VLYNQ_TXD0/GP[63]	HD5		–	–	VLYNQ_TXD0		GP[63]	
HD6/VLYNQ_TXD1/GP[64]	HD6		–	–	VLYNQ_TXD1		GP[64]	
HD7/VLYNQ_TXD2/GP[65]	HD7		–	–	VLYNQ_TXD2		GP[65]	
HD8/VLYNQ_TXD3/GP[66]	HD8		–	–	VLYNQ_TXD3		GP[66]	
HD9/MCOL/GP[67]	HD9		MCOL	HOSTBK = 011 or HOSTBK = 100	–	–	GP[67]	HOSTBK = 000 or HOSTBK = 010
HD10/MCRS/GP[68]	HD10		MCRS		–	–	GP[68]	
HD11/MTXD3/GP[69]	HD11		MTXD3		–	–	GP[69]	
HD12/MTXD2/GP[70]	HD12		MTXD2		–	–	GP[70]	
HD13/MTXD1/GP[71]	HD13		MTXD1		–	–	GP[71]	
HD14/MTXD0/GP[72]	HD14		MTXD0		–	–	GP[72]	
HD15/MTXCLK/GP[73]	HD15		MTXCLK		–	–	GP[73]	
HHWIL/MRXDV/GP[74]	HHWIL		MRXDV		–	–	GP[74]	
HCNTL1/MTXEN/GP[75]	HCNTL1		MTXEN		–	–	GP[75]	
HCNTL0/MRXER/GP[76]	HCNTL0		MRXER		–	–	GP[76]	
HR/$\overline{W}$/MRXCLK/GP[77]	HR/$\overline{W}$		MRXCLK		–	–	GP[77]	
$\overline{HDS2}$/MRXD0/GP[78]	$\overline{HDS2}$		MRXD0		–	–	GP[78]	
$\overline{HDS1}$/MRXD1/GP[79]	$\overline{HDS1}$		MRXD1		–	–	GP[79]	
$\overline{HRDY}$/MRXD2/GP[80]	$\overline{HRDY}$		MRXD2		–	–	GP[80]	
$\overline{HCS}$/MDCLK/GP[81]	$\overline{HCS}$		MDCLK		–	–	GP[81]	
$\overline{HINT}$/MRXD3/GP[82]	$\overline{HINT}$		MRXD3		–	–	GP[82]	
$\overline{HAS}$/MDIO/GP[83]	$\overline{HAS}$		MDIO		–	–	GP[83]	

Table 3-23 provides a different view of the Host Block pin muxing, showing the Host Block function based on PINMUX1 settings. The selection options are also shown pictorially in Figure 3-11.

If EMAC operation is desired, EMAC must be placed in reset before programming PINMUX1.HOSTBK to select EMAC pins.

Table 3-23. Host Block Function Selection

PINMUX1 SETTING HOSTBK	BLOCK FUNCTION	RESULTING PIN FUNCTIONS
000	GPIO (27) (**default**)	**GPIO:** GP[83:57]
001	HPI + GPIO (1)	**HPI:** HHWIL, HCNTL[1:0], HR/$\overline{W}$, $\overline{HDS2}$, $\overline{HDS1}$, $\overline{HRDY}$, $\overline{HCS}$, $\overline{HINT}$, $\overline{HAS}$, HD[15:0] **GPIO:** GP[57]
010	VLYNQ + GPIO (17)	**VLYNQ:** VLYNQ_CLOCK, VLYNQ_SCRUN, VLYNQ_RXD[3:0], VLYNQ_TXD[3:0] **GPIO:** GP[83:67]
011	VLYNQ + EMAC (MII) + MDIO	**VLYNQ:** VLYNQ_CLOCK, VLYNQ_SCRUN, VLYNQ_RXD[3:0], VLYNQ_TXD[3:0] **EMAC (MII):** TXCLK, CRS, COL, TXD[3:0], RXDV, TXEN, RXER, RXCLK, RXD[3:0] **MDIO:** MDC, MDIO **If EMAC operation is desired, EMAC must be placed in reset before programming PINMUX1.HOSTBK to select EMAC pins.**
100	EMAC (MII) + MDIO + GPIO (10)	**EMAC (MII):** TXCLK, CRS, COL, TXD[3:0], RXDV, TXEN, RXER, RXCLK, RXD[3:0] **MDIO:** MDC, MDIO **GPIO:** GP[66:57] **If EMAC operation is desired, EMAC must be placed in reset before programming PINMUX1.HOSTBK to select EMAC pins.**
101 to 111	Reserved	Reserved

The VDD3P3V_PWDN.HOST field determines the power state of the Host Block pins. The Host Block pins default to powered up. For more details on the VDD3P3V_PWDN.HOST field, see Section 3.2, *Power Considerations*.

3.7.3.4 UART0 Data Block Muxing

This block of 2 pins consists of UART0 Data and GPIO muxed pins. The PINMUX1.UR0DBK register field select the pin functions in the UART0 Data Block.

Table 3-24 summarizes the 2 pins in the UART0 Data Block, the multiplexed function on each pin, and the PINMUX configurations to select the corresponding function.

Table 3-24. UART0 Data Block Muxed Pins Selection

SIGNAL	MULTIPLEXED FUNCTIONS			
	UART0		GPIO	
NAME	FUNCTION	SELECT	FUNCTION	SELECT
URXD0/GP[85]	URXD0	UR0DBK = 1	GP[85]	UR0DBK = 0
UTXD0/GP[86]	UTXD0		GP[86]	

As discussed in Section 3.7.3.2, *Peripherals Spanning Multiple Pin Mux Blocks*, the UART0 pins span across two Pin Mux Blocks: UART0 Data Block, and UART0 Flow Control Block. For proper UART0 operation, the two pins in the UART0 Data Block must be configured for UART0 data functions. The two pins in the UART0 Flow Control Block are optional.

Table 3-25 provides a different view of the UART0 Data Block pin muxing, showing the UART0 Data Block function based on PINMUX1.UR0DBK setting. The selection options are also shown pictorially in Figure 3-11.

Table 3-25. UART0 Data Block Function Selection

PINMUX1.UR0DBK	BLOCK FUNCTION	RESULTING PIN FUNCTIONS
0	GPIO (2) (**default**)	**GPIO:** GP[86:85]
1	UART0 Data	**UART0:** URXD0, UTXD0

In addition, the VDD3P3V_PWDN.UR0DAT field determines the power state of the UART0 Data Block pins. The UART0 Data Block pins default to powered down and not operational. To use these pins, user must first program VDD3P3V_PWDN.UR0DAT = 0 to power up the pins. For more details on the VDD3P3V_PWDN.UR0DAT field, see Section 3.2, *Power Considerations*.

The UART0 Data Block features internal pullup resistors, which matches the UART inactive polarity.

3.7.3.5 UART0 Flow Control Block

This block of 2 pins consists of UART0 Flow Control, PWM0, and GPIO muxed pins. The PINMUX1.UR0FCBK register field selects the pin functions in the UART0 Flow Control Block.

Table 3-26 summarizes the 2 pins in the UART0 Flow Control Block, the multiplexed function on each pin, and the PINMUX configurations to select the corresponding function.

Table 3-26. UART0 Flow Control Block Muxed Pins Selection

SIGNAL	MULTIPLEXED FUNCTIONS					
	UART0		PWM0		GPIO	
NAME	FUNCTION	SELECT	FUNCTION	SELECT	FUNCTION	SELECT
UCTS0/ GP[87]	UCTS0	UR0FCBK = 01	–	–	GP[87]	UR0FCBK = 00/10
URTS0/ PWM0/ GP[88]	URTS0		PWM0	UR0FCBK = 10	GP[88]	UR0FCBK = 00

As discussed in Section 3.7.3.2, *Peripherals Spanning Multiple Pin Mux Blocks*, the UART0 pins span across two Pin Mux Blocks: UART0 Data Block, and UART0 Flow Control Block. For proper UART0 operation, the two pins in the UART0 Data Block must be configured for UART0 data functions. The two pins in the UART0 Flow Control Block are optional.

Table 3-27 provides a different view of the UART0 Flow Control Block pin muxing, showing the UART0 Flow Control Block function based on PINMUX1.UR0FCBK setting. The selection options are also shown pictorially in Figure 3-11.

Table 3-27. UART0 Flow Control Block Function Selection

PINMUX1.UR0FCBK	BLOCK FUNCTION	RESULTING PIN FUNCTIONS
00	GPIO (2) (**default**)	**GPIO:** GP[88:87]
01	UART0 Flow Control	**UART0:** UCTS0, URTS0
10	PWM0 + GPIO (1)	**PWM0:** PWM0 **GPIO:** GP[87]
11	Reserved	Reserved

In addition, the VDD3P3V_PWDN.UR0FC field determines the power state of the UART0 Flow Control Block pins. The UART0 Flow Control Block pins default to powered down and not operational. To use these pins, user must first program VDD3P3V_PWDN.UR0FC = 0 to power up the pins. For more details on the VDD3P3V_PWDN.UR0FC field, see Section 3.2, *Power Considerations*.

The UART0 Flow Control Block features internal pullup resistors, which matches the UART inactive polarity.

3.7.3.6 Timer0 Block

This block of 2 pins consists of Timer0, McBSP0, and GPIO muxed pins. The PINMUX1.TIM0BK register field selects the pin functions in the Timer0 Block.

Table 3-28 summarizes the 2 pins in the Timer0 Block, the multiplexed function on each pin, and the PINMUX configurations to select the corresponding function.

Table 3-28. Timer0 Block Muxed Pins Selection

SIGNAL	MULTIPLEXED FUNCTIONS					
	McBSP		Timer0		GPIO	
NAME	FUNCTION	SELECT	FUNCTION	SELECT	FUNCTION	SELECT
TINP0L/ GP[98]	–	–	TINP0L	TIM0BK = 01/11	GP[98]	TIM0BK = 00
CLKS0/ TOUT0L/ GP[97]	CLKS0	TIM0BK = 11	TOUT0L	TIM0BK = 01	GP[97]	

As discussed in Section 3.7.3.2, *Peripherals Spanning Multiple Pin Mux Blocks*, the McBSP0 pins span across two Pin Mux Blocks: Serial Port Sub-Block0, and Timer0 Block. For proper McBSP0 operation, the Serial Port Sub-Block0 must be programmed to select McBSP0 function. The McBSP0 CLKS0 pin in the Timer0 Block is optional for McBSP0 operation. CLKS0 is only needed if you desire using CLKS0 as an external clock source to the McBSP0 internal sample rate generator.

Table 3-29 provides a different view of the Timer0 Block pin muxing, showing the Timer0 Block function based on PINMUX1.TIM0BK setting. The selection options are also shown pictorially in Figure 3-11.

Table 3-29. Timer0 Block Function Selection

PINMUX1.TIM0BK	BLOCK FUNCTION	RESULTING PIN FUNCTIONS
00	GPIO (2) (**default**)	**GPIO:** GP[98:97]
01	Timer0	**Timer0:** TINP0L, TOUT0L
10	Reserved	–
11	McBSP0 External Clock Source, Timer0 Input	**McBSP0:** CLKS0 **Timer0:** TINP0L

In addition, the VDD3P3V_PWDN.TIMER0 field determines the power state of the Timer0 Block pins. The Timer0 Block pins default to powered down and not operational. To use these pins, user must first program VDD3P3V_PWDN.TIMER0 = 0 to power up the pins. For more details on the VDD3P3V_PWDN.TIMER0 field, see Section 3.2, *Power Considerations*.

3.7.3.7 Timer1 Block

This block of 2 pins consists of Timer1, HECC, UART1 Data, and GPIO muxed pins. The PINMUX1.TIM1BK register field selects the pin functions in the Timer1 Block.

Table 3-30 summarizes the 2 pins in the Timer1 Block, the multiplexed function on each pin, and the PINMUX configurations to select the corresponding function.

Table 3-30. Timer1 Block Muxed Pins Selection

SIGNAL NAME	MULTIPLEXED FUNCTIONS							
	HECC		TIMER1		UART1		GPIO	
	FUNCTION	SELECT	FUNCTION	SELECT	FUNCTION	SELECT	FUNCTION	SELECT
HECC_RX/ TINP1L/ URXD1/ GP[56]	HECC_RX	TIM1BK = 11	TINP1L	TIM1BK = 01	URXD1	TIM1BK = 10	GP[56]	TIM1BK = 00
HECC_TX/ TOUT1L/ UTXD1/ GP[55]	HECC_TX		TOUT1L		UTXD1		GP[55]	

Unlike UART0, UART1 only supports data pins but not flow control pins.

Table 3-31 provides a different view of the Timer1 Block pin muxing, showing the Timer1 Block function based on PINMUX1.TIM1BK setting. The selection options are also shown pictorially in Figure 3-11.

Table 3-31. Timer1 Block Function Selection

PINMUX1.TIM1BK	BLOCK FUNCTION	RESULTING PIN FUNCTIONS
00	GPIO (2) (**default**)	**GPIO:** GP[56:55]
01	Timer1	**Timer1:** TINP1L, TOUT1L
10	UART1 Data	**UART1:** URXD1, UTXD1
11	HECC	**HECC:** HECC_RX, HECC_TX

In addition, the VDD3P3V_PWDN.TIMER1 field determines the power state of the Timer1 Block pins. The Timer1 Block pins default to powered down and not operational. To use these pins, user must first program VDD3P3V_PWDN.TIMER1 = 0 to power up the pins. For more details on the VDD3P3V_PWDN.TIMER1 field, see Section 3.2, *Power Considerations*.

The Timer1 Block features internal pull up resistors, which matches the UART and HECC inactive polarity.

3.7.3.8 Serial Port Block

This block of 12 pins consists of McASP0, McBSP0, and GPIO muxed pins. The following register fields select the pin functions in the Serial Port Block:

- PINMUX1.SPBK0
- PINMUX1.SPBK1

The Serial Port Block is further subdivided into these sub-blocks:

- Serial Port Sub-Block 0: McBSP0, part of McASP0, and GPIO.
- Serial Port Sub-Block 1: part of McASP0 and GPIO.

Table 3-32 summarizes the 12 pins in the Serial Port Block, the multiplexed function on each pin, and the PINMUX configurations to select the corresponding function.

Table 3-32. Serial Port Block Muxed Pins Selection

SIGNAL NAME	MULTIPLEXED FUNCTIONS					
	McASP0		McBSP0		GPIO	
	FUNCTION	SELECT	FUNCTION	SELECT	FUNCTION	SELECT
Serial Port Sub-block 0						
ACLKR0/CLKX0/GP[99]	ACLKR0	SPBK0 = 10	CLKX0	SPBK0 = 01	GP[99]	SPBK0 = 00
AFSR0/DR0/GP[100]	AFSR0		DR0		GP[100]	
AHCLKR0/CLKR0/GP[101]	AHCLKR0		CLKR0		GP[101]	
AXR0[3]/FSR0/GP[102]	AXR0[3]		FSR0		GP[102]	
AXR0[2]/FSX0/GP[103]	AXR0[2]		FSX0		GP[103]	
AXR0[1]/DX0/GP[104]	AXR0[1]		DX0		GP[104]	
Serial Port Sub-block 1						
AXR0[0]/GP[105]	AXR0[0]	SPBK1 = 10	–	–	GP[105]	SPBK1 = 00
ACLKX0/GP[106]	ACLKX0		–	–	GP[106]	
AFSX0/GP[107]	AFSX0		–	–	GP[107]	
AHCLKX0/GP[108]	AHCLKX0		–	–	GP[108]	
AMUTEIN0/GP[109]	AMUTEIN0		–	–	GP[109]	
AMUTE0/GP[110]	AMUTE0		–	–	GP[110]	

As discussed in Section 3.7.3.2, *Peripherals Spanning Multiple Pin Mux Blocks*, the McBSP0 pins span across two Pin Mux Blocks: Serial Port Sub-Block0, and Timer0 Block. For proper McBSP0 operation, the Serial Port Sub-Block0 must be programmed to select McBSP0 function. The McBSP0 CLKS0 pin in the Timer0 Block is optional for McBSP0 operation. CLKS0 is only needed if you desire using CLKS0 as an external clock source to the McBSP0 internal sample rate generator.

Table 3-33 and Table 3-34 provide a different view of the Serial Port Block. Table 3-33 shows the Serial Port Sub-Block 0 function based on PINMUX1.SPBK0 setting. Table 3-34 shows the Serial Port Sub-Block 1 function based on PINMUX1.SPBK1 setting. These selection options are also shown pictorially in Figure 3-11.

Table 3-33. Serial Port Sub-Block 0 Function Selection

PINMUX1.SPBK0	BLOCK FUNCTION	RESULTING PIN FUNCTIONS
00	GPIO (6) (**default**)	**GPIO:** GP[104:99]
01	McBSP0	**McBSP0:** CLKX0, FSX0, DX0, CLKR0, FSR0, DR0
10	McASP0 Receive, 3 Serializers	**McASP0:** ACLKR0, AFSR0, AHCLKR0, AXR0[3], AXR0[2], AXR0[1]
11	Reserved	Reserved

Table 3-34. Serial Port Sub-Block 1 Function Selection

PINMUX1.SPBK1	BLOCK FUNCTION	RESULTING PIN FUNCTIONS
00	GPIO (6) (**default**)	**GPIO:** GP[110:105]
01	Reserved	–
10	McASP0 Transmit with 1 Serializer and Mute Control	**McASP0:** AXR0[0], ACLKX0, AFSX0, AHCLKX0, AMUTEIN0[(1)], AMUTE0
11	Reserved	–

(1) The input from the AMUTEIN0/GP[109] pin is connected to both the McASP0 and GPIO.

In addition, the VDD3P3V_PWDN.SP field determines the power state of the Serial Port Block pins. The Serial Port Block pins default to powered down and not operational. To use these pins, user must first program VDD3P3V_PWDN.SP = 0 to power up the pins. For more details on the VDD3P3V_PWDN.SP field, see Section 3.2, *Power Considerations*.

To facilitate McASP0 operation, the input from the AMUTEIN0/GP[109] pin is connected to both the McASP0 and the GPIO module. Therefore when an external mute event occurs, in addition to notifying the McASP0, it can also cause an interrupt through the GPIO module.

3.7.3.9 PWM1 Block

This block of 1 pin consists of PWM1 and GPIO muxed pins (GP[4]/PWM1). The PINMUX1.PWM1BK register field selects the pin function in the PWM1 Block.

Table 3-35 summarizes the 1 pin in the PWM1 Block, its multiplexed function, and the PINMUX configurations to select the corresponding function.

Table 3-35. PWM1 Block Muxed Pin Selection

SIGNAL	MULTIPLEXED FUNCTIONS			
	PWM1		GPIO	
NAME	FUNCTION	SELECT	FUNCTION	SELECT
GP[4]/PWM1	PWM1	PWM1BK = 1	GP[4]	PWM1BK = 0

Table 3-36 provides a different view of the PWM1 Block pin muxing, showing the PWM1 Block function based on PINMUX1.PWM1BK setting. The selection options are also shown pictorially in Figure 3-11.

Table 3-36. PWM1 Block Function Selection

PINMUX1.PWM1BK	BLOCK FUNCTION	RESULTING PIN FUNCTIONS
0	GPIO (1) (**default**)	**GPIO:** GP[4]
1	PWM1	**PWM1:** PWM1

In addition, the VDD3P3V_PWDN.PWM1 field determines the power state of the PWM1 Block pin. The PWM1 Block pin defaults to powered down and not operational. To use this pin, user must first program VDD3P3V_PWDN.PWM1 = 0 to power up the pin. For more details on the VDD3P3V_PWDN.PWM1 field, see Section 3.2, *Power Considerations*.

3.7.3.10 CLKOUT Block

This block of 1 pin consists of CLKOUT, PWM2, and GPIO muxed pin (CLKOUT0/PWM2/GP[84]). The PINMUX1.CKOBK register field selects the pin function in the CLKOUT Block.

Table 3-37 summarizes the 1 pin in the CLKOUT Block, its multiplexed function, and the PINMUX configurations to select the corresponding function.

Table 3-37. CLKOUT Block Multiplexed Pin Selection

SIGNAL	MULTIPLEXED FUNCTIONS					
	CLKOUT0		PWM2		GPIO	
NAME	FUNCTION	SELECT	FUNCTION	SELECT	FUNCTION	SELECT
CLKOUT0/ PWM2/ GP[84]	CLKOUT0	CKOBK = 01	PWM2	CKOBK = 10	GP[84]	CKOBK = 00

Table 3-38 provides a different view of the CLKOUT Block pin muxing, showing the CLKOUT Block function based on PINMUX1.CKOBK setting. The selection options are also shown pictorially in Figure 3-11.

Table 3-38. CLKOUT Block Function Selection

PINMUX1.CKOBK	BLOCK FUNCTION	RESULTING PIN FUNCTIONS
00	GPIO (1)	**GPIO:** GP[84]
01	CLKOUT (**default**)	**Device Clock-Out:** CLKOUT0
10	PWM2	**PWM2:** PWM2
11	Reserved	Reserved

This block defaults to CLKOUT0 pin function.

In addition, the VDD3P3V_PWDN.CLKOUT field determines the power state of the CLKOUT Block pin. The CLKOUT Block pin defaults to powered up. For more details on the VDD3P3V_PWDN.CLKOUT field, see Section 3.2, *Power Considerations*.

3.7.3.11 EMIFA/VPSS Block Muxing

This block of 61 pins consists of VPSS, EMIFA, and GPIO muxed pins. The following register fields affect the pin functions in the EMIFA/VPSS Block:

- All PINMUX0 register fields: AEM, CS5SEL, CS4SEL, CS3SEL, AEAW, CCDCSEL, HVDSEL, CWENSEL, CFLDSEL, CI76SEL, CI54SEL, CI32SEL, and CI10SEL

The EMIFA/VPSS Block is divided into multiple sub-blocks for ultimate flexibility in pin multiplexing to accommodate a wide variety of applications:

- Sub-Block 0: multiplexed between VPFE, EMIFA address/control pins, and GPIO.
- Sub-Block 1: multiplexed between EMIFA data/address/control pins, and GPIO.
- Sub-Block 2: no multiplexing. EMIFA control pins EM_WAIT/(RDY/$\overline{\text{BSY}}$), $\overline{\text{EM\_OE}}$, $\overline{\text{EM\_WE}}$.
- Sub-Block 3: multiplexed between EMIFA address pins EM_A[12:6] and GPIO.

The EMBK0, EMBK1, EMBK2, EMBK3 fields in the VDD3P3V_PWDN register determine the power state of the EMIFA/VPSS Block pins. The EMIFA/VPSS Block pins default to powered up. For more details on the EMBK0, EMBK1, EMBK2, EMBK3 fields in the VDD3P3V_PWDN register, see Section 3.2, *Power Considerations*.

To understand pin multiplexing in the EMIFA/VPSS Block, the user should start with Section 3.7.3.11.1, *EMIFA/VPSS Block Pin Selection Procedure*, which outlines the procedures to select pin functions of this block. Section 3.7.3.11.7, *EMIFA/VPSS Block Pin-By-Pin Multiplexing Summary*, provides a pin-by-pin multiplexing summary for the EMIFA/VPSS Block. For more information on the PINMUX0 and PINMUX1 registers, see Section 3.7.2, *Pin Muxing Selection After Device Reset*.

3.7.3.11.1 EMIFA/VPSS Block Pin Selection Procedure

Follow the steps below to perform pin selection for the EMIFA/VPSS Block and its sub-blocks.

1. **Major Configuration Options**: start with Table 3-39, *EMIFA/VPSS Block Major Configuration Choices*. Based on the peripheral needs, the user should select from the major configuration options in this block: Major Config Options A, B, and E.
2. **Sub-Block 2 and Sub-Block 3 Selection**: After selecting the major configuration option from Table 3-39, *EMIFA/VPSS Block Major Configuration Choices*, the pin selection for Sub-Block 2 and Sub-Block 3 is complete.
3. **Sub-Block 0 Selection**: Use Table 3-40 through Table 3-42, *EMIFA/VPSS Sub-Block 0 Configuration Choices*, to refine Sub-Block 0 pin selections.
   a. Go to the table with the Major Configuration Option chosen in Step 1.
   b. Each Major Configuration Option is further divided down into multiple Minor Configuration Options. Select a Minor Configuration Option that best suits the application need.
   c. Within the chosen Minor Configuration Option, further refine the detailed pin configurations by selecting the settings of PINMUX0 fields CCDCSEL, HVDSEL, CWENSEL, CFLDSEL, CI10SEL, CI32SEL, CI54SEL, and CI76SEL.
   d. The *Selection Fields* columns show the settings needed to program the PINMUX0 register.
4. **Sub-Block 1 Selection**: Use Table 3-43 through Table 3-45, *EMIFA/VPSS Sub-Block 1 Configuration Choices*, to refine Sub-Block 1 pin selection.
   a. Go to the table with the Major Configuration Option chosen in Step 1.
   b. Each Major Configuration Option is further divided down into multiple Minor Configuration Options. Select a Minor Configuration Option that best suits the application need.
   c. Within the chosen Minor Configuration Option, further refine the detailed pin configurations by selecting the settings of PINMUX0 fields CS3SEL, CS4SEL, and CS5SEL.
   d. The *Selection Fields* columns show the settings needed to program the PINMUX0 register.

After following the procedure in this section to determine pin functions for the EMIFA/VPSS Block, the user should refer to Section 3.7.3.11.7, *EMIFA/VPSS Block Pin-By-Pin Multiplexing Summary*, for pin-multiplexing information on a pin-by-pin basis.

3.7.3.11.2 EMIFA/VPSS Block Major Configuration Choices

Table 3-39 shows the major configuration choices in the EMIFA/VPSS Block. For instructions on how to use the *EMIFA/VPSS Block Major Configuration Choices* table for the EMIFA/VPSS Block and Sub-Blocks, see Section 3.7.3.11.1.

Table 3-39. EMIFA/VPSS Block Major Configuration Choices

MAJOR CONFIG. OPTION	PINMUX SELECTION FIELDS(1)		RESULTING PERIPHERALS/PINS			
	AEM	CCDCSEL	EMIFA	# GP PINS (FROM GP[33:5])	VPFE AND # GP PINS (FROM GP[54:34])	
				# GP Pins	CCDCSEL	VPFE & # GP Pins
A	000	0, 1	-	29 GP pins	0	No CCDC 21 GP pins
					1	8-to-16-bit CCDC 0-to-12 GP pins
B	001(2)	0, 1	8-bit EMIFA (ASYNC) Pinout Mode 1 *with address pins to support 32KB to 16MB per CS.*	9-to-13 GP pins	0	No CCDC 11-to-19 GP pins
					1(2)	8-to-16-bit CCDC(2) 0-to-10 GP pins
E	101	0, 1	8-bit EMIFA (NAND) Pinout Mode 5	14-to-18 GP pins	0	No CCDC 21 GP pins
					1	8-to-16-bit CCDC 0-to-12 GP pins

(1) For additional pin mux details for each Sub-Block, see Table 3-40 through Table 3-42, *EMIFA/VPSS Sub-Block 0 Configuration Choices*, and Table 3-43 through Table 3-45, *EMIFA/VPSS Sub-Block 1 Configuration Choices*.
(2) If PINMUX0.AEM = 001, it is not possible to get the C_WE pin for VPFE.

As shown in Table 3-39, the major configuration choices of the EMIFA/VPSS Block are determined by the following PINMUX register fields:

- PINMUX0 register fields AEM and CCDCSEL

Based on the peripheral needs, select from the major configuration options in this block: Major Configuration Options A, B, and E.

The following is an example on how to read Table 3-39. For example, the "PINMUX Selection Fields" columns indicate that Major Configuration Choice B is selected through setting PINMUX0.AEM = 1 and CCDCSEL = 0 or 1 (based on the system's VPFE requirement). The "Resulting Peripherals/Pins" columns indicate that Major Configuration Option B can support the following combination of pin functions:

- Pins for 8-bit EMIFA (Async or NAND) function. The number of address pins supported provide 32KByte to 16MByte address reach per EMIFA Chip Select (CS) space.
- Pins for up to 16-bit VPFE. If 8-to-16-bit VPFE (CCDCSEL = 1) is selected, the user may have 0 to 10 GPIO pins. Exact detail on number of GPIO pins and VPFE control pins is furthered determined by other PINMUX0 settings discussed in the EMIFA/VPSS Sub-Block 0 Configuration Choices.
- 9-to-13 GPIO pins from GP[33:5]. For details on the number of GPIO pins, see Section 3.7.3.11.4,*EMIFA/VPSS Sub-Block 1 Configuration Choices*.

After using Table 3-39 to select the Major Configuration Option for the EMIFA/VPSS Block, proceed to select the detailed pin choices in the EMIFA/VPSS Sub-Blocks.

3.7.3.11.3 EMIFA/VPSS Sub-Block 0 Configuration Choices

Table 3-40 through Table 3-42 show the configuration choices in the EMIFA/VPSS Sub-Block 0. For instructions on how to use the different configuration choices tables for the EMIFA/VPSS Block and Sub-Blocks, see Section 3.7.3.11.1. **Note:** italics in these tables indicate mandatory settings for a given Minor Configuration option.

Before using Table 3-40 through Table 3-42 to configure the details of the EMIFA/VPSS Sub-Block 0, the user should first select a Major Configuration Option for the EMIFA/VPSS Block (see Section 3.7.3.11.2). After determining the Major Configuration Option (A, B, or E), the user can now use Table 3-40 through Table 3-42 to refine Sub-Block 0 pin selections:

1. Go to the table with the Major Configuration Option chosen from Table 3-39.
2. Each Major Configuration Option is further divided down into multiple Minor Configuration Options. Select a Minor Configuration Option that best suits the application need.
3. Within the chosen Minor Configuration Option, further refine the detailed pin configurations by selecting the settings of PINMUX0 fields CCDCSEL, HVDSEL, CWENSEL, CFLDSEL, CI10SEL, CI32SEL, CI54SEL, and CI76SEL.
4. The *PINMUX Selection Fields* columns show the settings needed to program the PINMUX0 register.

Table 3-40. EMIFA/VPSS Sub-Block 0 Configuration Choice A[(1)]

MAJOR CONFIG OPTION	MINOR CONFIG OPTION	PINMUX SELECTION FIELDS			RESULTING PERIPHERALS/PINS		
		AEM	AEAW	OTHERS	EMIFA	VPFE	# GPIO PINS
A	A1	000	000	**Cfg Summary**	**No EMIFA**	**No CCDC**	**21 GP pins**
				CCDCSEL = 0	-	-	0 = GP[54, 43:36]
				HVDSEL = 0			0 = GP[53:52]
				CWENSEL = 0			0 = GP[35]
				CFLDSEL = 0			0 = GP[34]
				CI10SEL = 0			0 = GP[45:44]
				CI32SEL = 0			0 = GP[47:46]
				CI54SEL = 0			0 = GP[49:48]
				CI76SEL = 0			0 = GP[51:50]
	A2	000	000	**Cfg Summary**	**No EMIFA**	**8-to-16-bit CCDC**	**0-to-12 GP pins**
				CCDCSEL = 1	-	1 = PCLK, YI[7:0]	-
				HVDSEL = 0,1		1 = VD, HD	0 = GP[53:52]
				CWENSEL = 0,1		1 = C_WE	0 = GP[35]
				CFLDSEL = 0,1		1 = C_FIELD	0 = GP[34]
				CI10SEL = 0,1		1 = CI[1:0]	0 = GP[45:44]
				CI31SEL = 0,1		1 = CI[3:2]	0 = GP[47:46]
				CI54SEL = 0,1		1 = CI[5:4]	0 = GP[49:48]
				CI76SEL = 0,1		1 = CI[7:6]	0 = GP[51:50]

(1) Italics indicate mandatory settings for a given Minor Configuration option.

Table 3-41. EMIFA/VPSS Sub-Block 0 Configuration Choice B[1]

MAJOR CONFIG OPTION	MINOR CONFIG OPTION	PINMUX SELECTION FIELDS			RESULTING PERIPHERALS/PINS		
		AEM	AEAW	OTHERS	EMIFA	VPFE	# GPIO PINS
B	B1	001	100	**Config Summary**	**8-bit EMIFA (Async) Pinout mode 1 w/ EM_A[21:0]**	**No CCDC**	**11 GP pins**
				CCDCSEL = 0	-	-	0 = GP[54, 43:36]
				HVDSEL = 0	-		0 = GP[53:52]
				CWENSEL = 0	*0 = EM_R/$\overline{W}$*		-
				CFLDSEL = 0	0 = EM_A21		-
				CI10SEL = 0	*0 = EM_A[19:20]*		-
				CI32SEL = 0	*0 = EM_A[17:18]*		-
				CI54SEL = 0	*0 = EM_A[15:16]*		-
				CI76SEL = 0	*0 = EM_A[13:14]*		-
B	B2	001	000	**Config Summary**	**8-bit EMIFA (Async) Pinout mode 1 w/ EM_A[12:0] only**	**8-to-16-bit CCDC**	**0-to-10 GP pins**
				CCDCSEL = 1	-	1 = PCLK, YI[7:0]	-
				HVDSEL = 0,1	-	1 = VD, HD	0 = GP[53:52]
				CWENSEL = 0	*0 = EM_R/$\overline{W}$*	-	-
				CFLDSEL = 0,1	0 = EM_A21 (not used)	1 = C_FIELD	-
				CI10SEL = 0,1	-	1 = CI[1:0]	0 = GP[45:44]
				CI32SEL = 0,1	-	1 = CI[3:2]	0 = GP[47:46]
				CI54SEL = 0,1	-	1 = CI[5:4]	0 = GP[49:48]
				CI76SEL = 0,1	-	1 = CI[7:6]	0 = GP[51:50]
B	B3	001	001	**Config Summary**	**8-bit EMIFA (Async) Pinout mode 1 w/ EM_A[14:0] only**	**8-to-14-bit CCDC**	**0-to-8 GP pins**
				CCDCSEL = 1	-	1 = PCLK, YI[7:0]	-
				HVDSEL = 0,1	-	1 = VD, HD	0 = GP[53:52]
				CWENSEL = 0	*0 = EM_R/$\overline{W}$*	-	-
				CFLDSEL = 0,1	0 = EM_A21 (not used)	1 = C_FIELD	-
				CI10SEL = 0,1	-	1 = CI[1:0]	0 = GP[45:44]
				CI32SEL = 0,1	-	1 = CI[3:2]	0 = GP[47:46]
				CI54SEL = 0,1	-	1 = CI[5:4]	0 = GP[49:48]
				CI76SEL = 0	*0 = EM_A[13:14]*	-	-

(1) Italics indicate mandatory settings for a given Minor Configuration option.

Table 3-41. EMIFA/VPSS Sub-Block 0 Configuration Choice B (continued)

MAJOR CONFIG OPTION	MINOR CONFIG OPTION	PINMUX SELECTION FIELDS			RESULTING PERIPHERALS/PINS		
		AEM	AEAW	OTHERS	EMIFA	VPFE	# GPIO PINS
B	B4	001	010	**Config Summary**	**8-bit EMIFA (Async) Pinout mode 1 w/ EM_A[16:0] only**	**8-to-12-bit CCDC**	**0-to-6 GP pins**
				CCDCSEL = 1	-	1 = PCLK, YI[7:0]	-
				HVDSEL = 0,1	-	1 = VD, HD	0 = GP[53:52]
				CWENSEL = 0	*0 = EM_R/$\overline{W}$*	-	-
				CFLDSEL = 0,1	0 = EM_A21 (not used)	1 = C_FIELD	-
				CI10SEL = 0,1	-	1 = CI[1:0]	0 = GP[45:44]
				CI32SEL = 0,1	-	1 = CI[3:2]	0 = GP[47:46]
				CI54SEL = 0	*0 = EM_A[15:16]*	-	-
				CI76SEL = 0	*0 = EM_A[13:14]*	-	-
B	B5	001	011	**Config Summary**	**8-bit EMIFA (Async) Pinout mode 1 w/ EM_A[18:0] only**	**8-to-10-bit CCDC**	**0-to-4 GP pins**
				CCDCSEL = 1	-	1 = PCLK, YI[7:0]	-
				HVDSEL = 0,1	-	1 = VD, HD	0 = GP[53:52]
				CWENSEL = 0	*0 = EM_R/$\overline{W}$*	-	-
				CFLDSEL = 0,1	0 = EM_A21 (not used)	1 = C_FIELD	-
				CI10SEL = 0,1	-	1 = CI[1:0]	0 = GP[45:44]
				CI32SEL = 0	*0 = EM_A[17:18]*	-	-
				CI54SEL = 0	*0 = EM_A[15:16]*	-	-
				CI76SEL = 0	*0 = EM_A[13:14]*	-	-

Table 3-41. EMIFA/VPSS Sub-Block 0 Configuration Choice B (continued)

MAJOR CONFIG OPTION	MINOR CONFIG OPTION	PINMUX SELECTION FIELDS			RESULTING PERIPHERALS/PINS		
		AEM	AEAW	OTHERS	EMIFA	VPFE	# GPIO PINS
B	B6	001	100	**Config Summary**	**8-bit EMIFA (Async) Pinout mode 1 w/ EM_A[21:0]**	**8-bit CCDC**	**0-to-2 GP pins**
				CCDCSEL = 1	-	1 = PCLK, YI[7:0]	-
				HVDSEL = 0,1	-	1 = VD, HD	0 = GP[53:52]
				CWENSEL = 0	*0 = EM_R/$\overline{W}$*	-	-
				CFLDSEL = 0,1	0 = EM_A21	1 = C_FIELD	-
				CI10SEL = 0	*0 = EM_A[19:20]*	-	-
				CI32SEL = 0	*0 = EM_A[17:18]*	-	-
				CI54SEL = 0	*0 = EM_A[15:16]*	-	-
				CI76SEL = 0	*0 = EM_A[13:14]*	-	-

Table 3-42. EMIFA/VPSS Sub-Block 0 Configuration Choice E[(1)]

MAJOR CONFIG OPTION	MINOR CONFIG OPTION	PINMUX SELECTION FIELDS			RESULTING PERIPHERALS/PINS		
		AEM	AEAW	OTHERS	EMIFA	VPFE	# GPIO PINS
E	E1	101	000	**Cfg Summary**	**8-bit EMIFA (NAND) Pinout mode 5**	**No CCDC**	**21 GP pins**
				CCDCSEL = 0	-	-	0 = GP[54, 43:36]
				HVDSEL = 0			0 = GP[53:52]
				CWENSEL = 0			0 = GP[35]
				CFLDSEL = 0			0 = GP[34]
				CI10SEL = 0			0 = GP[45:44]
				CI32SEL= 0			0 = GP[47:46]
				CI54SEL = 0			0 = GP[49:48]
				CI76SEL = 0			0 = GP[51:50]
	E2	101	000	**Cfg Summary**	**8-bit EMIFA (NAND) Pinout mode 5**	**8-to-16-bit CCDC**	**0-to-12 GP pins**
				CCDCSEL = 1	-	1 = PCLK, YI[7:0]	-
				HVDSEL = 0,1		1= VD, HD	0 = GP[53:52]
				CWENSEL = 0,1		1 = C_WE	0 = GP[35]
				CFLDSEL = 0,1		1 = C_FIELD	0 = GP[34]
				CI10SEL = 0,1		1 = CI[1:0]	0 = GP[45:44]
				CI31SEL = 0,1		1 = CI[3:2]	0 = GP[47:46]
				CI54SEL = 0,1		1 = CI[5:4]	0 = GP[49:48]
				CI76SEL = 0,1		1 = CI[7:6]	0 = GP[51:50]

(1) Italics indicate mandatory settings for a given Minor Configuration option.

As shown in Table 3-40 through Table 3-42, the configuration choices of the EMIFA/VPSS Sub-Block 0 are determined by the following PINMUX register fields:

- PINMUX0 register fields AEM, AEAW, CCDCSEL, HVDSEL, CWENSEL, CFLDSEL, CI10SEL, CI32SEL, CI54SEL, and CI76SEL.

The following is an example of how to read Table 3-40 through Table 3-42 using Sub-Block 0 Minor Configuration B6 as an example:

- The *PINMUX Selection Fields* columns indicate that Sub-Block 0 Minor Configuration Option B6 is selected through setting, PINMUX0.AEM = 1, PINMUX0.AEAW = 4, CCDCSEL = 1, HVDSEL = 0 or 1 (based on the system's need for VPFE control signals VD and HD), CWENSEL = 0 (mandatory setting), CFLDSEL = 0 or 1 (based on the system's need for VPFE control signal C_FIELD), CI10SEL = 0 (mandatory), CI32SEL = 0 (mandatory), CI54SEL = 0 (mandatory), and CI76SEL = 0 (mandatory).
- The *Resulting Peripherals/Pins* columns show the functional pins resulting from the PINMUX setting. For example, PINMUX0.CCDCSEL = 1 gives the user the PCLK and YI[7:0] pins for the VPFE. PINMUX0.HVDSEL = 1 gives the user VD and HD pins for VPFE, while HVDSEL = 0 gives the user 2 GP pins.

3.7.3.11.4 EMIFA/VPSS Sub-Block 1 Configuration Choices

Table 3-43 through Table 3-45 show the configuration choices in the EMIFA/VPSS Sub-Block 1. For instructions on how to use the different configuration choices tables for the EMIFA/VPSS Block and Sub-Blocks, see Section 3.7.3.11.1, *EMIFA/VPSS Block Pin Selection Procedure*.

Before using Table 3-43 through Table 3-45 to configure the details of the EMIFA/VPSS Sub-Block 1, the user should first select the Major Configuration Option for the EMIFA/VPSS Block (see Section 3.7.3.11.2, *EMIFA/VPSS Block Major Configuration Choices*). After determining the Major Configuration Option (A, B, or E), the user can now use Table 3-43 through Table 3-45 to refine the Sub-Block 1 pin selections.

1. Go to the table with the Major Configuration Option chosen from Table 3-39.
2. Each Major Configuration Option is further divided down into multiple Minor Configuration Options. Select a Minor Configuration Option that best suits the application need.
3. Within the chosen Minor Configuration Option, further refine the detailed pin configurations by selecting the settings of PINMUX0 fields CS3SEL, CS4SEL, and CS5SEL.
4. The *PINMUX Selection Fields* columns give the user the settings needed to program the PINMUX0 register.

Table 3-43. EMIFA/VPSS Sub-Block 1 Configuration Choice A (1)

MAJOR CONFIG OPTION	MINOR CONFIG OPTION	PINMUX SELECTION FIELDS		RESULTING PERIPHERALS/PINS	
		AEM	OTHERS	EMIFA	GPIO
A	A1	000	**Cfg Summary**	**No EMIFA**	**29 GP pins**
			CS3SEL = 0	–	0 = GP[33:5]
			CS4SEL = 0		
			CS5SEL = 0		

(1) Italics indicate mandatory settings for a given Minor Configuration option.

Table 3-44. EMIFA/VPSS Sub-Block 1 Configuration Choice B (1)

MAJOR CONFIG OPTION	MINOR CONFIG OPTION	PINMUX SELECTION FIELDS		RESULTING PERIPHERALS/PINS	
		AEM	OTHERS	EMIFA	GPIO
B	B1	001	**Cfg Summary**	**8-bit EMIFA (Async) Pinout Mode 1**	**10-to-13 GP pins**
			Basic Pins You Get	*EM_D[7:0], $\overline{\text{EM\_CS2}}$, EM_A[4:0], EM_BA[1:0]*	0 = GP[31:22]
			CS3SEL = 0,1	1 = $\overline{\text{EM\_CS3}}$	0 = GP[13]
			CS4SEL = 0,1	1 = $\overline{\text{EM\_CS4}}$	0 = GP[32]
			CS5SEL = 0,1	1 = $\overline{\text{EM\_CS5}}$	0 = GP[33]

(1) Italics indicate mandatory setting for a given Minor Configuration option.

Table 3-45. EMIFA/VPSS Sub-Block 1 Configuration Choice E (1)

MAJOR CONFIG OPTION	MINOR CONFIG OPTION	PINMUX SELECTION FIELDS		RESULTING PERIPHERALS/PINS	
		AEM	OTHERS	EMIFA	GPIO
E	E1	101	**Cfg Summary**	**8-bit EMIFA (NAND) Pinout Mode 5**	**15-to-18 GP pins**
			Basic Pins You Get	*EM_D[7:0], EM_A[2:1], $\overline{\text{EM\_CS2}}$*	0 = GP[31:22, 11:10, 7:5]
			CS3SEL = 0,1	1 = $\overline{\text{EM\_CS3}}$	0 = GP[13]
			CS4SEL = 0,1	1 = $\overline{\text{EM\_CS4}}$	0 = GP[32]
			CS5SEL = 0,1	1 = $\overline{\text{EM\_CS5}}$	0 = GP[33]

(1) Italics indicate mandatory setting for a given Minor Configuration option.

The Sub-Block 1 Minor Configuration Options are independent from the Sub-Block 0 Minor Configuration Options. The user can independently select the appropriate Minor Configuration Option for each Sub-Block.

As shown in Table 3-43 through Table 3-45, the configuration choices of the EMIFA/VPSS Sub-Block 1 are determined by the following PINMUX register fields:

- PINMUX0 register fields AEM, CS3SEL, CS4SEL, and CS5SEL.

The following is an example on how to read Table 3-43 through Table 3-45 using Sub-Block 1 Minor Configuration E1 as an example:

- The *PINMUX Selection Fields* columns indicate that Sub-Block 1 Minor Configuration Option E1 is selected through setting PINMUX0 fields to AEM = 5, CS3SEL = 0/1 (based on the desired pin choice), CS4SEL = 0/1 (based on the desired pin choice), and CS5SEL = 0/1 (based on the desired pin choice).
- The *Resulting Peripherals/Pins* columns show the functional pins resulting from the PINMUX setting. For example, you automatically get EMIFA pins EM_D[7:0], EM_A[2:1], and $\overline{\text{EM\_CS2}}$ in addition to at least 15 GPIO pins in Minor Config Option E1 (GP[31:22], GP[11:10], and GP[7:5]). If you program CS3SEL = 1, CS4SEL = 0, and CS5SEL = 0, you also get $\overline{\text{EM\_CS3}}$, GP[32], and GP[33].

3.7.3.11.5 EMIFA/VPSS Sub-Block 2 Configuration Choices

The 3 pins in the EMIFA/VPSS Sub-Block 2 are standalone (non-multiplexed) pins. They always function as EMIFA control pins EM_WAIT/(RDY/$\overline{\text{BSY}}$), $\overline{\text{EM\_OE}}$, and $\overline{\text{EM\_WE}}$. No pin mux selection is necessary for this Sub-Block.

3.7.3.11.6 EMIFA/VPSS Sub-Block 3 Configuration Choices

The 8 pins in the EMIFA/VPSS Sub-Block 3 are multiplexed between:

- EMIFA Address Pins EM_A[12:5]
- GPIO pins GP[96:89]

The pin functions in the EMIFA/VPSS Sub-Block 3 are determined by the following PINMUX register fields:

- PINMUX0.AEM

Once the Major Configuration Option for the EMIFA/VPSS Block (see Section 3.7.3.11.2, *EMIFA/VPSS Block Major Configuration Choices*) is chosen, no further actions are necessary to refine the EMIFA/VPSS Sub-Block 3 pin selection. For instructions on configuring the EMIFA/VPSS Block, see Section 3.7.3.11.1, *EMIFA/VPSS Block Pin Selection Procedure*.

Table 3-46 summarizes the pin selections in the EMIFA/VPSS Sub-Block 3 based on the PINMUX selections.

Table 3-46. EMIFA/VPSS Sub-Block 3 Configuration Choices

MAJOR CONFIG OPTION	PINMUX SELECTION FIELD	RESULTING PERIPHERALS/PINS	
	AEM	EMIFA	GPIO
A	000	-	GP[96:89]
B	001	EM_A[12:5]	-
E	101	-	GP[96:89]

The following is an example on how to read Table 3-46 using Sub-Block 3 Major Configuration B as an example:

- The *PINMUX Selection Fields* columns indicate that Sub-Block 3 Major Configuration Option B is selected through setting PINMUX0.AEM = 001b.
- The *Resulting Peripherals/Pins* columns show the functional pins resulting from the PINMUX setting. In Major Configuration B, the user gets EMIFA address pins EM_A[12:5] from Sub-Block 3.

3.7.3.11.7 EMIFA/VPSS Block Pin-By-Pin Multiplexing Summary

This section summarizes the EMIFA/VPSS Block muxing on a pin-by-pin basis. It provides an alternative view to pin muxing in the EMIFA/VPSS Block. This section should only be used after following the procedures listed in Section 3.7.3.11.1 to determine the actual EMIFA/VPSS Configuration Option for the application need.

Table 3-47 shows the pin multiplexing control for each pin in the EMIFA/VPSS Sub-Block 0. These are the fields in the PINMUX0 and PINMUX1 registers that control the multiplexing in this sub-block:

- PINMUX0: AEM, AEAW, CWENSEL, CFLDSEL, CI10SEL, CI32SEL, CI54SEL, CI76SEL, CCDCSEL, and HVDSEL

Table 3-48 shows the pin multiplexing control for each pin in the EMIFA/VPSS Sub-Block 1. These are the fields in the PINMUX0 register that control the multiplexing in this sub-block:

- PINMUX0: AEM, CS5SEL, CS4SEL, and CS3SEL

EMIFA/VPSS Sub-Block 2 is dedicated to EMIFA pins EM_WAIT/(RDY/$\overline{\text{BSY}}$), $\overline{\text{EM\_OE}}$, and $\overline{\text{EM\_WE}}$. There is no pin multiplexing in this block. These pins always function as EMIFA control pins.

Table 3-49 shows the pin multiplexing control for each pin in the EMIFA/VPSS Sub-Block 3. These are the fields in the PINMUX0 register that control the multiplexing in this sub-block:

- PINMUX0: AEM

Table 3-47. EMIFA/VPSS Sub-Block 0 Pin-By-Pin Mux Control

SIGNAL NAME	MULTIPLEXED FUNCTIONS					
	VPFE		EMIFA ADDR/CTRL		GPIO	
	FUNCTION	SELECT	FUNCTION	SELECT	FUNCTION	SELECT
PCLK/GP[54]	PCLK	CCDCSEL = 1	–	–	GP[54]	CCDCSEL = 0
YI7(CCD7)/GP[43]	YI7(CCD7)		–	–	GP[43]	
YI6(CCD6)/GP[42]	YI6(CCD6)		–	–	GP[42]	
YI5(CCD5)/GP[41]	YI5(CCD5)		–	–	GP[41]	
YI4(CCD4)/GP[40]	YI4(CCD4)		–	–	GP[40]	
YI3(CCD3)/GP[39]	YI3(CCD3)		–	–	GP[39]	
YI2(CCD2)/GP[38]	YI2(CCD2)		–	–	GP[38]	
YI1(CCD1)/GP[37]	YI1(CCD1)		–	–	GP[37]	
YI0(CCD0)/GP[36]	YI0(CCD0)		–	–	GP[36]	
VD/GP[53]	VD	HVDSEL = 1	–	–	GP[53]	HVDSEL = 0
HD/GP[52]	HD		–	–	GP[52]	
CI7(CCD15)/EM_A[13]/GP[51]	CI7(CCD15)	AEM = 0/1/5, AEAW = 0, CI76SEL = 1	EM_A[13]	AEM = 1, AEAW = 1/2/3/4, CI76SEL = 0	GP[51]	AEM = 0/1/5, AEAW = 0, CI76SEL = 0
CI6(CCD14)/EM_A[14]/GP[50]	CI6(CCD14)		EM_A[14]		GP[50]	
CI5(CCD13)/EM_A[15]/GP[49]	CI5(CCD13)	AEM = 0/1/5, AEAW = 0/1[(1)], CI54SEL = 1	EM_A[15]	AEM = 1, AEAW = 2/3/4, CI54SEL = 0	GP[49]	AEM = 0/1/5, AEAW = 0/1[(1)], CI54SEL = 0
CI4(CCD12)/EM_A[16]/GP[48]	CI4(CCD12)		EM_A[16]		GP[48]	
CI3(CCD11)/EM_A[17]/GP[47]	CI3(CCD11)	AEM = 0/1/5, AEAW = 0/1/2[(1)], CI32SEL = 1	EM_A[17]	AEM = 1, AEAW = 3/4, CI32SEL = 0	GP[47]	AEM = 0/1/5, AEAW = 0/1/2[(1)], CI32SEL = 0
CI2(CCD10)/EM_A[18]/GP[46]	CI2(CCD10)		EM_A[18]		GP[46]	
CI1(CCD9)/EM_A[19]/GP[45]	CI1(CCD9)	AEM = 0/1/5, AEAW = 0/1/2/3[(1)], CI10SEL = 1	EM_A[19]	AEM = 1, AEAW = 4, CI10SEL = 0	GP[45]	AEM = 0/1/5, AEAW = 0/1/2/3[(1)], CI10SEL = 0
CI0(CCD8)/EM_A[20]/GP[44]	CI0(CCD8)		EM_A[20]		GP[44]	
C_WE/EM_R/$\overline{W}$/GP[35]	C_WE	CWENSEL = 1, AEM = 0/5	EM_R/$\overline{W}$	CWENSEL = 0, AEM = 1	GP[35]	CWENSEL = 0, AEM = 0/5
C_FIELD/EM_A[21]/GP[34]	C_FIELD	CFLDSEL = 1, AEM = 0/1/5	EM_A[21]	CFLDSEL = 0, AEM = 1	GP[34]	CFLDSEL = 0, AEM = 0/5

(1) AEAW = 1/2/3/4 is only valid if AEM[2:0] = 1.

Table 3-48. EMIFA/VPSS Sub-Block 1 Pin-By-Pin Mux Control

SIGNAL NAME	MULTIPLEXED FUNCTIONS			
	EMIFA		GPIO[1]	
	FUNCTION	SELECT	FUNCTION	SELECT
$\overline{\text{EM\_CS5}}$/GP[33]	$\overline{\text{EM\_CS5}}$	CS5SEL = 1	GP[33]	CS5SEL = 0
$\overline{\text{EM\_CS4}}$/GP[32]	$\overline{\text{EM\_CS4}}$	CS4SEL = 1	GP[32]	CS4SEL = 0
GP[31]	–	–	GP[31]	–
GP[30]			GP[30]	
GP[29]			GP[29]	
GP[28]			GP[28]	
GP[27]			GP[27]	
GP[26]/(FASTBOOT)			GP[26]	
GP[25]/(BOOTMODE3)			GP[25]	
GP[24]/(BOOTMODE2)			GP[24]	
GP[23]/(BOOTMODE1)			GP[23]	
GP[22]/(BOOTMODE0)			GP[22]	
EM_D[7]/GP[21]	EM_D[7]	AEM = 1/5	GP[21]	AEM = 0
EM_D[6]/GP[20]	EM_D[6]		GP[20]	
EM_D[5]/GP[19]	EM_D[5]		GP[19]	
EM_D[4]/GP[18]	EM_D[4]		GP[18]	
EM_D[3]/GP[17]	EM_D[3]		GP[17]	
EM_D[2]/GP[16]	EM_D[2]		GP[16]	
EM_D[1]/GP[15]	EM_D[1]		GP[15]	
EM_D[0]/GP[14]	EM_D[0]		GP[14]	
$\overline{\text{EM\_CS3}}$/GP[13]	$\overline{\text{EM\_CS3}}$	CS3SEL = 1	GP[13]	CS3SEL = 0
$\overline{\text{EM\_CS2}}$/GP[12]	$\overline{\text{EM\_CS2}}$	AEM = 1/5	GP[12]	AEM = 0
EM_A[1]/(ALE)/ GP[9]/(AEAW1/PLLMS1)	EM_A[1]/(ALE)		GP[9]	
EM_A[2]/(CLE)/GP[8]/ (AEAW0/PLLMS0)	EM_A[2]/(CLE)		GP[8]	
EM_A[3]/GP[11]	EM_A[3]	AEM = 1	GP[11]	AEM = 0/5
EM_A[4]/GP[10]/ (AEAW2/PLLMS2)	EM_A[4]		GP[10]	
EM_A[0]/GP[7]/(AEM2)	EM_A[0]		GP[7]	
EM_BA[0]/GP[6]/(AEM1)	EM_BA[0]		GP[6]	
EM_BA[1]/GP[5]/(AEM0)	EM_BA[1]		GP[5]	

(1) GP[31:22] are standalone pins. They are not muxed with any other functions. They are included in this table because they are grouped in the EMIFA/VPSS Sub-Block 1.

Table 3-49. EMIFA/VPSS Sub-Block 3 Pin-By-Pin Mux Control

SIGNAL NAME	MULTIPLEXED FUNCTIONS			
	EMIFA		GPIO	
	FUNCTION	SELECT	FUNCTION	SELECT
EM_A[12]/GP[89]	EM_A[12]	AEM = 1	GP[89]	AEM = 0/5
EM_A[11]/GP[90]	EM_A[11]		GP[90]	
EM_A[10]/GP[91]	EM_A[10]		GP[91]	
EM_A[9]/GP[92]	EM_A[9]		GP[92]	
EM_A[8]/GP[93]	EM_A[8]		GP[93]	
EM_A[7]/GP[94]	EM_A[7]		GP[94]	
EM_A[6]/GP[95]	EM_A[6]		GP[95]	
EM_A[5]/GP[96]	EM_A[5]		GP[96]	

3.8 Device Initialization Sequence After Reset

Software should follow this initialization sequence after coming out of device reset.

1. Complete the boot sequence as needed. For more details on the boot sequence, see the *Using the TMS320DM643x Bootloader* Application Report (literature number SPRAAG0).
2. If the device is not already at the desired operating frequency, program the PLL Controllers (PLLC1 and PLLC2) to configure the device frequency. For details on how to program the PLLC, see the *TMS320DM643x DMP DSP Subsystem* Reference Guide (literature number SPRU978).
3. Program PINMUX0 and PINMUX1 registers to select device pin functions. For more details on programming the PINMUX0 and PINMUX1 registers to select device pin functions, see Section 3.7, *Multiplexed Pin Configurations*.
   Note: if EMAC operation is desired, the EMAC **must** be placed in reset before programming PINMUX1.HOSTBK to select EMAC pins.
4. Program the VDD3P3V_PWDN register to power up the necessary I/O pins. For more details on programming the VDD3P3V_PWDN register, see Section 3.2, *Power Considerations*. On DM6435, the user should program VDD3P3V_PWDN bit 13 to 1 to power down the reserved pins RSV17, RSV18, and RSV19.
5. As needed by the application, program the following System Module registers when there are no active transactions on the respective peripherals:
   a. HPICTL (Section 3.6.2.1, *HPI Control Register*): applicable for HPI **only** if a different host burst write timeout value from default is desired.
   b. TIMERCTL (Section 3.6.2.2, *Timer Control Register*): applicable for Timer0 and Watchdog Timer2 **only**.
   c. EDMATCCFG (Section 3.6.2.3, *EDMA TC Configuration Register*): applicable for EDMA **only**. The recommendation is to leave the EDMATCCFG register at its default.
   d. VPSS_CLKCTL (Section 3.3.2, *VPSS Clocks*): applicable for VPSS **only**.
6. Program the Power and Sleep Controller (PSC) to enable the desired peripherals. For details on how to program the PSC, see the *TMS320DM643x DMP DSP Subsystem* Reference Guide (literature number SPRU978).
7. Program the Switched Central Resource (SCR) bus priorities for the master peripherals (Section 3.6.1). This **must** be configured when there are no active transactions on the respective peripherals:
   a. Program the MSTPRI0 and MSTPRI1 registers in the System Module. These registers can be programmed **before or after** the respective peripheral is enabled by the PSC in step 6.
   b. Program the EDMACC QUEPRI register, the C64x+ MDMAARBE.PRI field, and the VPSS PCR register. These registers can only be programmed **after** the respective peripheral is enabled by the PSC in step 6.
8. Configure the C64x+ Megamodule and the peripherals.
   a. For details on C64x+ Megamodule configuration, see the *TMS320C64x+ DSP Megamodule* Reference Guide (literature number SPRU871).

   Special considerations: Bootloader disables C64x+ cache—For all boot modes that default to DSPBOOTADDR = 0x0010 0000 (i.e., all boot modes except the EMIFA ROM Direct Boot, BOOTMODE[3:0] = 0100, FASTBOOT = 0), the bootloader code disables all C64x+ cache (L2, L1P, and L1D) so that upon exit from the bootloader code, all C64x+ memories are configured as all RAM (L2CFG.L2MODE = 0h, L1PCFG.L1PMODE = 0h, and L1DCFG.L1DMODE = 0h). If cache use is required, the application code must explicitly enable the cache. For more information on boot modes, see Section 3.4.1, *Boot Modes*. For more information on the bootloader, see the *Using the TMS320DM643x Bootloader* Application Report (literature number SPRAAG0).

b. Peripherals configuration: see the respective peripheral user's guide.

Special considerations: DDR2 memory controller—the Peripheral Bus Burst Priority Register (PBBPR) should be programmed to ensure good DDR2 throughput and to prevent command starvation (prevention of certain commands from being processed by the DDR2 memory controller). For more details, see the *TMS320DM643x DMP DDR2 Memory Controller* User's Guide (literature number SPRU986). A hex value of 0x20 is recommended for the PBBPR PR_OLD_COUNT field to provide a good DSP performance and still allow good utilization by other modules.

3.9 Debugging Considerations

3.9.1 Pullup/Pulldown Resistors

Proper board design should ensure that input pins to the DM643x DMP device always be at a valid logic level and not floating. This may be achieved via pullup/pulldown resistors. The DM643x DMP features internal pullup (IPU) and internal pulldown (IPD) resistors on most pins to eliminate the need, unless otherwise noted, for *external* pullup/pulldown resistors.

An external pullup/pulldown resistor needs to be used in the following situations:

- *Boot and Configuration Pins*: If the pin is both routed out and 3-stated (not driven), an external pullup/pulldown resistor is ***strongly recommended***, even if the IPU/IPD matches the desired value/state.
- *Other Input Pins*: If the IPU/IPD *does not* match the desired value/state, use an external pullup/pulldown resistor to pull the signal to the opposite rail.
- *EMIFA Chip Select Outputs*: On DM6435, the EMIFA chip select pins ($\overline{\text{EM\_CS2}}$, $\overline{\text{EM\_CS3}}$, $\overline{\text{EM\_CS4}}$, and $\overline{\text{EM\_CS5}}$) feature an internal pulldown (IPD) resistor. If these pins are connected and used as an EMIFA chip select signal, for proper device operation, an external pullup resistor ***must*** be used to ensure the $\overline{\text{EM\_CSx}}$ function defaults to an inactive (high) state.

For the boot and configuration pins (listed in Table 2-5, *Boot Terminal Functions*), if they are both routed out and 3-stated (not driven), it is ***strongly recommended*** that an external pullup/pulldown resistor be implemented. Although, internal pullup/pulldown resistors exist on these pins and they may match the desired configuration value, providing external connectivity can help ensure that valid logic levels are latched on these device boot and configuration pins. In addition, applying external pullup/pulldown resistors on the boot and configuration pins adds convenience to the user in debugging and flexibility in switching operating modes.

Tips for choosing an external pullup/pulldown resistor:

- Consider the total amount of current that may pass through the pullup or pulldown resistor. Make sure to include the leakage currents of all the devices connected to the net, as well as any internal pullup or pulldown resistors.
- Decide a target value for the net. For a pulldown resistor, this should be below the lowest V_{IL} level of all inputs connected to the net. For a pullup resistor, this should be above the highest V_{IH} level of all inputs on the net. A reasonable choice would be to target the V_{OL} or V_{OH} levels for the logic family of the limiting device; which, by definition, have margin to the V_{IL} and V_{IH} levels.
- Select a pullup/pulldown resistor with the largest possible value; but, which can still ensure that the net will reach the target pulled value when maximum current from all devices on the net is flowing through the resistor. The current to be considered includes leakage current plus, any other internal and external pullup/pulldown resistors on the net.
- For bidirectional nets, there is an additional consideration which sets a lower limit on the resistance value of the external resistor. Verify that the resistance is small enough that the weakest output buffer can drive the net to the opposite logic level (including margin).
- Remember to include tolerances when selecting the resistor value.
- For pullup resistors, also remember to include tolerances on the DV_{DD} rail.

For most systems, a 1-kΩ resistor can be used to oppose the IPU/IPD while meeting the above criteria. Users should confirm this resistor value is correct for their specific application.

For most systems, a 20-kΩ resistor can be used to compliment the IPU/IPD on the boot and configuration pins while meeting the above criteria. Users should confirm this resistor value is correct for their specific application.

For more detailed information on input current (I_I), and the low-/high-level input voltages (V_{IL} and V_{IH}) for the DM643x DMP, see Section 5.3, *Electrical Characteristics Over Recommended Ranges of Supply Voltage and Operating Temperature*.

For the internal pullup/pulldown resistors for all device pins, see the peripheral/system-specific terminal functions table.

4 System Interconnect

On the DM6435 device, the C64x+ Megamodule, the EDMA3 transfer controllers, and the system peripherals are interconnected through a switch fabric architecture (see Figure 4-1). The switch fabric is composed of multiple switched central resources (SCRs) and multiple bridges. The SCRs establish low-latency connectivity between master peripherals and slave peripherals. Additionally, the SCRs provide priority-based arbitration and facilitate concurrent data movement between master and slave peripherals. Through an SCR, the DSP subsystem can send data to the DDR2 Memory Controller without affecting a data transfer between the EMAC and L2 memory. Bridges are mainly used to perform bus-width conversion as well as bus operating frequency conversion. For example, in Figure 4-1, Bridge 6 performs a frequency conversion between a bus operating at DSP/3 clock rate and a bus operating at DSP/6 clock rate. Furthermore, Bridge 5 performs a bus-width conversion between a 64-bit bus and a 32-bit bus.

The C64x+ Megamodule, the EDMA3 transfer controllers (EDMA3TC[2:0]), and the various system peripherals can be classified into two categories: master peripherals and slave peripherals. Master peripherals are typically capable of initiating read and write transfers in the system and ***do not*** rely on the EDMA3 or on the CPU to perform transfers to and from them. The system master peripherals include the C64x+ Megamodule, the EDMA3 transfer controllers, VLYNQ, EMAC, HPI, and VPSS. Not all master peripherals may connect to all slave peripherals. The supported connections are designated by ' Y' in Table 4-1.

Table 4-1. System Connection Matrix

MASTER PERIPHERALS/MODULES	SLAVE PERIPHERALS/MODULES			
	C64x+ SDMA	DDR2 MEMORY CONTROLLER	SCR4(1)	SCR2, SCR6, SCR7, SCR8(1)
C64x+ MDMA	–	Y	–	Y
VPSS	–	Y	–	–
VLYNQ	Y	Y	Y	Y
EMAC	Y	Y	Y	Y
HPI	Y	Y	Y	Y
EDMA3TC's (EDMA3TC2/TC1/TC0)	Y	Y	Y	Y
C64x+ CFG	–	–	Y	Y

(1) All the peripherals/modules that support a connection to SCR2, SCR4, SCR6, SCR7, and SCR8 have access to all peripherals/modules connected to those respective SCRs.

4.1 System Interconnect Block Diagram

Figure 4-1 displays the DM6435 system interconnect block diagram. The following is a list that helps in the interpretation of this diagram:

- The direction of the arrows indicates either a bus master *or* bus slave.
- The arrow originates at a bus master and terminates at a bus slave.
- The direction of the arrows ***does not*** indicate the direction of data flow. Data flow is typically bi-directional for each of the documented bus paths.
- The pattern of each arrow's line indicates the clock rate at which it is operating— i.e., either DSP/3, DSP/6, or MXI/CLKIN clock rate.
- A peripheral may have multiple instances shown in Figure 4-1 for the following reason:
  - The peripheral/module has master port(s) for data transfers, as well as slave port(s) for register access, data access, and/or memory access. Examples of these peripherals are C64x+ Megamodule, EDMA3, VPSS, VLYNQ, HPI, and EMAC.

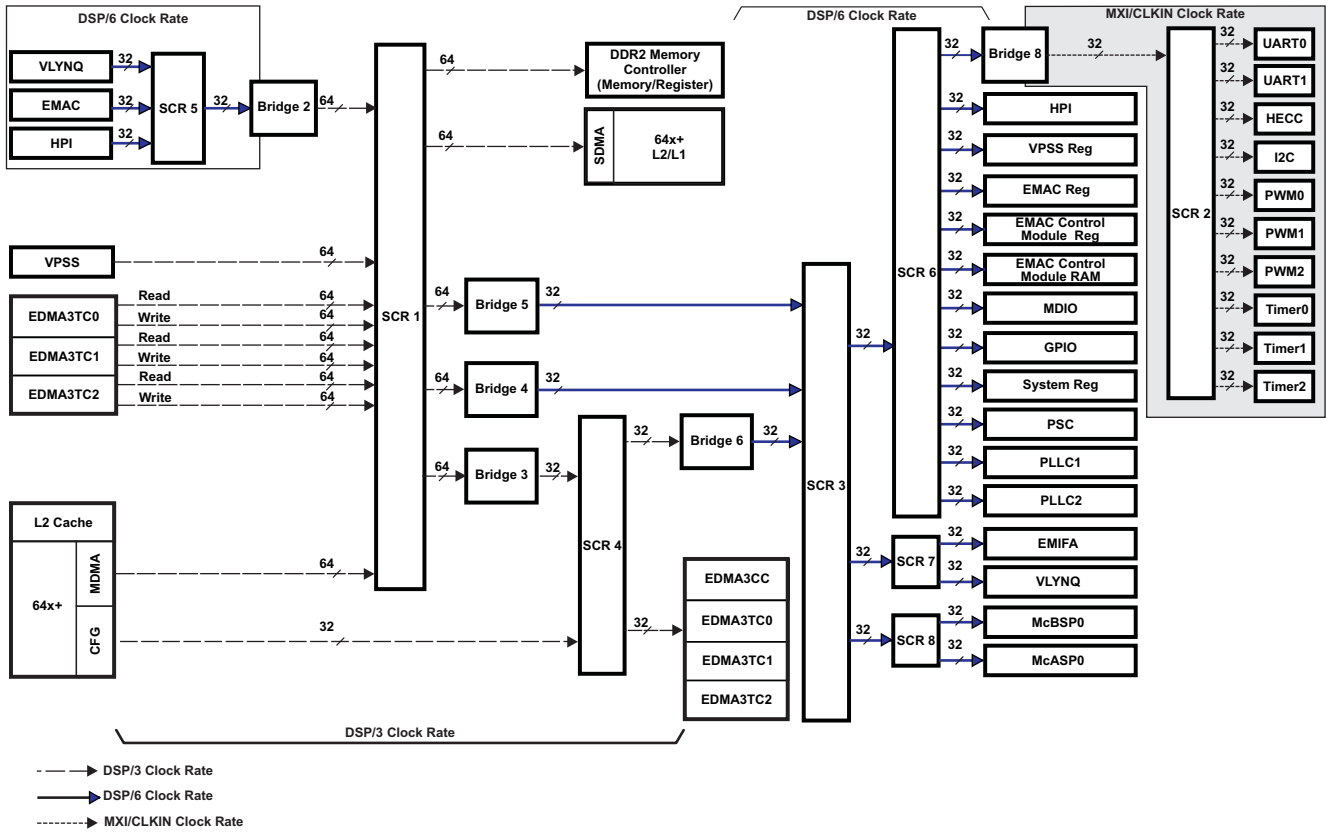

Figure 4-1. System Interconnect Block Diagram

5 Device Operating Conditions

5.1 Absolute Maximum Ratings Over Operating Temperature Range (Unless Otherwise Noted)[1]

Supply voltage ranges:	Core (CV_{DD})[2]	–0.5 V to 1.5 V
	I/O, 3.3V (DV_{DD33})[2]	–0.5 V to 4.2 V
	I/O, 1.8V (DV_{DDR2}, DDR_VDDDLL, PLL_{PWR18}, MXV_{DD})[2]	–0.5 to 2.5 V
Input voltage ranges:	V_I I/O, 3.3-V pins	–0.5 V to 4.2 V
	V_I I/O, 1.8 V	–0.5 V to 2.5 V
Output voltage ranges:	V_O I/O, 3.3-V pins	–0.5 V to 4.2 V
	V_O I/O, 1.8 V	–0.5 V to 2.5 V
Operating Junction temperature ranges, T_J:	Commercial	0C to 90C
	Automotive (Q or S suffix)	–40C to 125C
Storage temperature range, T_{stg}	(default)	–65C to 150C

(1) Stresses beyond those listed under "absolute maximum ratings" may cause permanent damage to the device. These are stress ratings only, and functional operation of the device at these or any other conditions beyond those indicated under "recommended operating conditions" is not implied. Exposure to absolute-maximum-rated conditions for extended periods may affect device reliability.
(2) All voltage values are with respect to $V_{SS.}$

5.2 Recommended Operating Conditions[1]

			MIN	NOM	MAX	UNIT
CV_{DD}	Supply voltage, Core (CV_{DD})[2]	(-7/-6/-5/-4/-L/-Q6/-Q5/-Q4 devices)	1.14	1.2	1.26	V
		(-7/-6/-5/-4/-L/-Q5 devices)	1.0	1.05	1.1	V
DV_{DD}	Supply voltage, I/O, 3.3V (DV_{DD33})		2.97	3.3	3.63	V
	Supply voltage, I/O, 1.8V (DV_{DDR2}, DDR_VDDDLL, PLL_{PWR18}, MXV_{DD}[3])		1.71	1.8	1.89	V
V_{SS}	Supply ground (V_{SS}, DDR_VSSDLL, MXV_{SS}[4])		0	0	0	V
DDR_VREF	DDR2 reference voltage[5]		$0.49DV_{DDR2}$	$0.5DV_{DDR2}$	$0.51DV_{DDR2}$	V
DDR_ZP	DDR2 impedance control, connected via 200 Ω resistor to V_{SS}			V_{SS}		V
DDR_ZN	DDR2 impedance control, connected via 200 Ω resistor to DV_{DDR2}			DV_{DDR2}		V
V_{IH}	High-level input voltage, 3.3V (except I2C pins)		2			V
	High-level input voltage, MXI/ CLKIN		0.65MXV			V
	High-level input voltage, I2C		$0.7DV_{DD33}$			
V_{IL}	Low-level input voltage, 3.3V (except I2C pins)				0.8	V
	Low-level input voltage, MXI/ CLKIN				0.35MXV	V
	Low-level input voltage, I2C		0		$0.3DV_{DD33}$	V
T_J	Operating Junction temperature[6][7]	Commercial	0		90	C
		Automotive (Q or S suffix)	–40		125	C
T_A	Operating Ambient Temperature[7]	Commercial	0		70	C
		Automotive (Q or S suffix)	-40		85	C
$F_{SYSCLK1}$[2]	DSP Operating Frequency (SYSCLK1), CV_{DD} = 1.2 V	-7 devices			700	MHz
		-Q6 devices			660	MHz
		-6/ -L devices			600	MHz
		-5/-Q5 devices			500	MHz
		-4/-Q4 devices			400	MHz
	DSP Operating Frequency (SYSCLK1), CV_{DD} = 1.05 V	-7 devices			560	MHz
		-6/-L devices			450	MHz
		-5/-Q5 devices			400	MHz
		-4 devices			350	MHz

(1) The actual voltage *must* be determined at device power-up, and ***not*** be changed dynamically during run-time.
(2) Applies to "tape and reel" part number counterparts as well. For more information, see Section 2.8, *Device and Development-Support Tool Nomenclature*.
(3) Oscillator 1.8 V power supply (MXV_{DD}) can be connected to the same 1.8 V power supply as DV_{DDR2}.
(4) Oscillator ground (MXV_{SS}) must be kept separate from other grounds and connected directly to the crystal load capacitor ground.
(5) DDR_VREF is expected to equal $0.5DV_{DDR2}$ of the transmitting device and to track variations in the DV_{DDR2}.
(6) In the absence of a heat sink or direct thermal attachment on the top of the device, use the following formula to determine the device junction temperature: $T_J = T_C$ + (Power x Psi_{JT}). Power and T_C can be measured by the user. Section 7.1, *Thermal Data for ZWT* and Section 7.1.1, *Thermal Data for ZDU* provide the junction-to-package top (PSI_{JT}) value based on airflow in the system. In the presence of a heat sink or direct thermal attachment on the top of the device, additional calculations and considerations ***must*** be taken into account. For more detailed information on thermal considerations, measurements, and calculations, see the *Thermal Considerations for TMS320DM64xx, TMS320DM64x, and TMS320C6000 Devices* Application Report (literature number SPRAAL9).
(7) Applications must meet ***both*** the Operating Junction Temperature and Operating Ambient Temperature requirements. For more detailed information on thermal considerations, measurements, and calculations, see the *Thermal Considerations for TMS320DM64xx, TMS320DM64x, and TMS320C6000 Devices* Application Report (literature number SPRAAL9).

5.3 Electrical Characteristics Over Recommended Ranges of Supply Voltage and Operating Temperature (Unless Otherwise Noted)

PARAMETER		TEST CONDITIONS (1)	MIN	TYP	MAX	UNIT
V_{OH}	High-level output voltage (3.3V I/O except I2C pins)	DV_{DD33} = MIN, I_{OH} = MAX	2.4			V
V_{OL}	Low-level output voltage (3.3V I/O except I2C pins)	DV_{DD33} = MIN, I_{OL} = MAX			0.4	V
	Low-level output voltage (3.3V I/O I2C pins)	I_O = 3 mA	0		0.4	V
I_I (2)	Input current [DC] (except I2C capable pins)	$V_I = V_{SS}$ to DV_{DD33} with internal pullup resistor (3)	50	100	250	µA
		$V_I = V_{SS}$ to DV_{DD33} with internal pulldown resistor (3)	–250	–100	–50	µA
	Input current [DC] (I2C)	$V_I = V_{SS}$ to DV_{DD33}			±10	µA
I_{OH}	High-level output current [DC]	CLK_OUT0/PWM2/GPIO[84] and VLYNQ_CLOCK/GP[57]			-8	mA
		DDR2			–13.4	mA
		All other peripherals			-4	mA
I_{OL}	Low-level output current [DC]	CLK_OUT0/PWM2/GPIO[84] and VLYNQ_CLOCK/GP[57]			8	mA
		DDR2			13.4	mA
		All other peripherals			4	mA
I_{OZ} (4)	I/O Off-state output current	$V_O = DV_{DD33}$ or V_{SS}; internal pull disabled			50	µA
		$V_O = DV_{DD33}$ or V_{SS}; internal pull enabled		±100		A
I_{CDD}	Core (CV_{DD}, V_{DDA_1P1V}) supply current (5)	CV_{DD} = 1.2 V, DSP clock = 700 MHz		597		mA
		CV_{DD}= 1.2 V, DSP clock = 660 MHz		560		mA
		CV_{DD} = 1.2 V, DSP clock = 600 MHz		524		mA
		CV_{DD} = 1.2 V, DSP clock = 500 MHz		460		mA
		CV_{DD} = 1.2 V, DSP clock = 400 MHz		392		mA
		CV_{DD} =1.05 V, DSP clock = 560 MHz		442		mA
		CV_{DD} = 1.05 V, DSP clock = 450 MHz		372		mA
		CV_{DD} = 1.05 V, DSP clock = 400 MHz		341		mA
I_{DDD}	3.3V I/O (DV_{DD33}) supply current (5)	DV_{DD}= 3.3 V, CV_{DD}= 1.2 V, DSP clock = 700 MHz		13		mA
		DV_{DD} = 3.3 V, CV_{DD} = 1.2 V, DSP clock = 660 MHz		13		mA
		DV_{DD} = 3.3 V, CV_{DD} = 1.2 V, DSP clock = 600 MHz		13		mA
		DV_{DD} = 3.3 V, CV_{DD} = 1.2 V, DSP clock = 500 MHz		13		mA
		DV_{DD} = 3.3 V, CV_{DD} = 1.2 V, DSP clock = 400 MHz		13		mA
		DV_{DD} = 3.3 V, CV_{DD} = 1.05 V, DSP clock = 560 MHz		13		mA
		DV_{DD} = 3.3 V, CV_{DD} = 1.05 V, DSP clock = 450 MHz		13		mA
		DV_{DD} = 3.3 V, CV= 1.05 V, DSP clock = 400 MHz		13		mA

(1) For test conditions shown as MIN, MAX, or NOM, use the appropriate value specified in the recommended operating conditions table.
(2) I_I applies to input-only pins and bi-directional pins. For input-only pins, I_I indicates the input leakage current. For bi-directional pins, I_I indicates the input leakage current and off-state (Hi-Z) output leakage current.
(3) Applies only to pins with an internal pullup (IPU) or pulldown (IPD) resistor.
(4) I_{OZ} applies to output-only pins, indicating off-state (Hi-Z) output leakage current.
(5) Measured under the following conditions: 60% DSP CPU utilization doing typical activity (peripheral configurations, other housekeeping activities); DDR2 Memory Controller at 50% utilization (135 MHz), 50% writes, 32 bits, 50% bit switching; 2 MHz McBSP0 at 100% utilization and 50% switching; Timer0 at 100% utilization. At room temperature (25 C) for typical process ZWT devices. The actual current draw varies across manufacturing processes and is highly application-dependent. DM643x DMP devices are offered in two basic options: lower-power option and high-performance option. Low-power devices offer lower power consumption across temperature and voltage when compared with high-performance devices. However, high-performance devices offer higher operating speeds. For more details on core and I/O activity, as well as information relevant to board power supply design, see the *TMS320DM643x Power Consumption Summary* Application Report (literature number SPRAAO6).

Electrical Characteristics Over Recommended Ranges of Supply Voltage and Operating Temperature (Unless Otherwise Noted) *(continued)*

PARAMETER		TEST CONDITIONS [1]	MIN	TYP	MAX	UNIT
I_{DDD}	1.8V I/O (DV_{DDR2}, DDR_VDDDLL, $PLLV_{PRW18}$, V_{DDA_1P8V}, MXV_{DD}) supply current[5]	DV_{DD}= 1.8 V, CV_{DD}= 1.2 V, DSP clock = 700 MHz		94		mA
		DV_{DD}= 1.8 V, CV_{DD}= 1.2 V, DSP clock = 660 MHz		94		mA
		DV_{DD} = 1.8 V, CV_{DD} = 1.2 V, DSP clock = 600 MHz		93		mA
		DV_{DD} = 1.8 V, CV_{DD} = 1.2 V, DSP clock = 500 MHz		92		mA
		DV_{DD} = 1.8 V, CV_{DD} = 1.2 V, DSP clock = 400 MHz		91		mA
		DV_{DD} = 1.8 V, CV_{DD} = 1.05 V, DSP clock = 560 MHz		74		mA
		DV_{DD} = 1.8 V, CV_{DD} = 1.05 V, DSP clock = 450 MHz		73		mA
		DV_{DD} = 1.8 V, CV_{DD} = 1.05 V, DSP clock = 400 MHz		72		mA
C_I	Input capacitance				5	pF
C_o	Output capacitance				5	pF

6 Peripheral Information and Electrical Specifications

6.1 Parameter Information

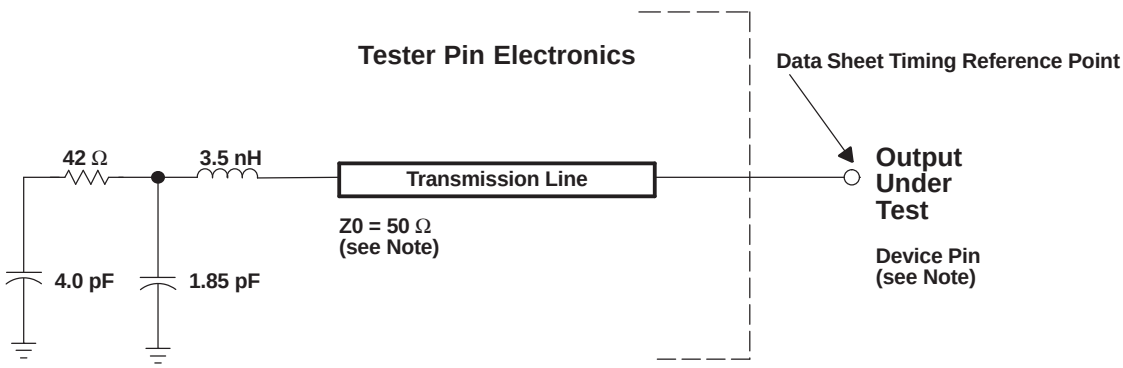

NOTE: The data sheet provides timing at the device pin. For output timing analysis, the tester pin electronics and its transmission line effects must be taken into account. A transmission line with a delay of 2 ns can be used to produce the desired transmission line effect. The transmission line is intended as a load only. It is not necessary to add or subtract the transmission line delay (2 ns) from the data sheet timings.

Input requirements in this data sheet are tested with an input slew rate of < 4 Volts per nanosecond (4 V/ns) at the device pin.

Figure 6-1. Test Load Circuit for AC Timing Measurements

The load capacitance value stated is only for characterization and measurement of AC timing signals. This load capacitance value does not indicate the maximum load the device is capable of driving.

6.1.1 3.3-V Signal Transition Levels

All input and output timing parameters are referenced to V_{ref} for both "0" and "1" logic levels. For 3.3 V I/O, V_{ref} = 1.5 V. For 1.8 V I/O, V_{ref} = 0.9 V.

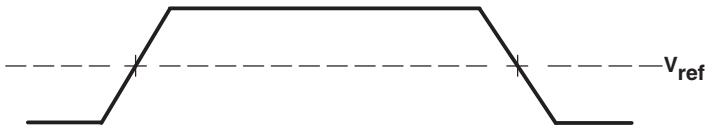

Figure 6-2. Input and Output Voltage Reference Levels for AC Timing Measurements

All rise and fall transition timing parameters are referenced to V_{IL} MAX and V_{IH} MIN for input clocks, V_{OL}MAX and V_{OH} MIN for output clocks.

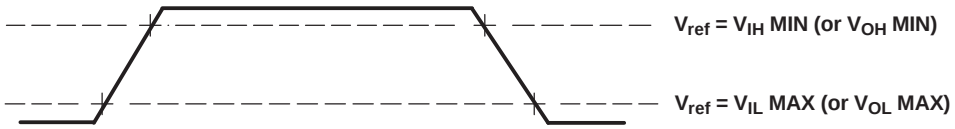

Figure 6-3. Rise and Fall Transition Time Voltage Reference Levels

6.1.2 3.3-V Signal Transition Rates

All timings are tested with an input edge rate of 4 volts per nanosecond (4 V/ns).

6.1.3 Timing Parameters and Board Routing Analysis

The timing parameter values specified in this data sheet do *not* include delays by board routings. As a good board design practice, such delays must *always* be taken into account. Timing values may be adjusted by increasing/decreasing such delays.

TI recommends utilizing the available I/O buffer information specification (IBIS) models to analyze the timing characteristics correctly. To properly use IBIS models to attain accurate timing analysis for a given system, see the *Using IBIS Models for Timing Analysis* application report (literature number SPRA839). If needed, external logic hardware such as buffers may be used to compensate any timing differences.

For the DDR2 memory controller interface, it is *not* necessary to use the IBIS models to analyze timing characteristics. TI provides a PCB routing rules solution that describes the routing rules to ensure the DDR2 memory controller interface timings are met. See the *Implementing DDR2 PCB Layout on the TMS320DM643x DMP DMSoC* Application Report (literature number SPRAAL6).

6.2 Recommended Clock and Control Signal Transition Behavior

All clocks and control signals ***must*** transition between V_{IH} and V_{IL} (or between V_{IL} and V_{IH}) in a monotonic manner.

6.3 Power Supplies

For more information regarding TI's power management products and suggested devices to power TI DSPs, visit www.ti.com/dsppower.

6.3.1 Power-Supply Sequencing

The DM6435 includes one core supply (CV_{DD}), and two I/O supplies—DV_{DD33} and DV_{DDR2}. To ensure proper device operation, a specific power-up sequence ***must*** be followed. Some TI power-supply devices include features that facilitate power sequencing—for example, Auto-Track and Slow-Start/Enable features. For more information on TI power supplies and their features, visit www.ti.com/dsppower.

Here is a summary of the power sequencing requirements:

- The power ramp order **must** be DV_{DD33} before DV_{DDR2}, and DV_{DDR2} before CV_{DD}—meaning during power up, the voltage at the DV_{DDR2} rail should never exceed the voltage at the DV_{DD33} rail. Similarly, the voltage at the CV_{DD} rail should never exceed the voltage at the DV_{DDR2} rail.
- From the time that power ramp begins, all power supplies (DV_{DD33}, DV_{DDR2}, CV_{DD}) **must** be stable within 200 ms. The term "stable" means reaching the recommended operating condition (see Section 5.2, *Recommended Operating Conditions* table).

6.3.2 Power-Supply Design Considerations

Core and I/O supply voltage regulators should be located close to the DSP to minimize inductance and resistance in the power delivery path. Additionally, when designing for high-performance applications utilizing the DM6435 device, the PC board should include separate power planes for core, I/O, and ground; all bypassed with high-quality low-ESL/ESR capacitors.

6.3.3 Power-Supply Decoupling

In order to properly decouple the supply planes from system noise, place as many capacitors (caps) as possible close to the DSP. These caps need to be close to the DSP, no more than 1.25 cm maximum distance to be effective. Physically smaller caps are better, such as 0402, but need to be evaluated from a yield/manufacturing point-of-view. Parasitic inductance limits the effectiveness of the decoupling capacitors, therefore physically smaller capacitors should be used while maintaining the largest available capacitance value.

Larger caps for each supply can be placed further away for bulk decoupling. Large bulk caps (on the order of 100 µF) should be furthest away, but still as close as possible. Large caps for each supply should be placed outside of the BGA footprint.

As with the selection of any component, verification of capacitor availability over the product's production lifetime should be considered.

For more details on capacitor usage and placement, see the *Implementing DDR2 PCB Layout on the TMS320DM643x DMP DMSoC* Application Report (literature number SPRAAL6).

6.3.4 DM6435 Power and Clock Domains

The DM6435 includes one single power domain — the "Always On" power domain. The "Always On" power domain is always on when the chip is on. The "Always On" domain is powered by the CV_{DD} pins of the DM6435. All DM6435 modules lie within the "Always On" power domain. Table 6-1 provides a listing of the DM6435 clock domains.

One primary reference clock is required for the DM6435 device. The can be either a crystal input or driven by external oscillators. A 27-MHz crystal is recommended for the system PLLs, which generate the internal clocks for the digital media processor, coprocessors, peripherals (including imaging peripherals), and the EDMA3. For further description of the DM6435 clock domains, see Table 6-3 and Figure 6-4.

Table 6-1. DM6435 Power and Clock Domains

Power Domain	Clock Domain	Peripheral/Module
Always On	CLKIN	UART0
Always On	CLKIN	UART1
Always On	CLKIN	HECC
Always On	CLKIN	I2C
Always On	CLKIN	Timer0
Always On	CLKIN	Timer1
Always On	CLKIN	Timer2
Always On	CLKIN	PWM0
Always On	CLKIN	PWM1
Always On	CLKIN	PWM2
Always On	CLKDIV3	DDR2
Always On	CLKDIV3	VPSS
Always On	CLKDIV3	EDMA
Always On	CLKDIV3	SCR
Always On	CLKDIV6	GPSC
Always On	CLKDIV6	LPSCs
Always On	CLKDIV6	PLLC1
Always On	CLKDIV6	PLLC2
Always On	CLKDIV6	Ice Pick
Always On	CLKDIV6	EMIFA
Always On	CLKDIV6	HPI
Always On	CLKDIV6	VLYNQ
Always On	CLKDIV6	EMAC
Always On	CLKDIV6	McASP0
Always On	CLKDIV6	McBSP0
Always On	CLKDIV6	GPIO
Always On	CLKDIV1	C64x+ CPU

Table 6-2. DM6435 Clock Domains

SUBSYSTEM	CLOCK DOMAIN	DOMAIN CLOCK SOURCE	FIXED RATIO vs. SYSCLK1 FREQUENCY	EXAMPLE FREQUENCY (MHz)
Peripherals (CLKIN Domain)	CLKIN	PLLC1 AUXCLK(1)	–	27 MHz
DSP Subsystem	CLKDIV1	PLLC1 SYSCLK1	1:1	594 MHz
EDMA3	CLKDIV3	PLLC1 SYSCLK2	1:3	198 MHz
VPSS	CLKDIV3	PLLC1 SYSCLK2	1:3	198 MHz
Peripherals (CLKDIV3 Domain)	CLKDIV3	PLLC1 SYSCLK2	1:3	198 MHz

(1) PLLC1 AUXCLK runs at exactly the same frequency as the device clock source from the MXI/CLKIN pin.

Table 6-2. DM6435 Clock Domains (continued)

SUBSYSTEM	CLOCK DOMAIN	DOMAIN CLOCK SOURCE	FIXED RATIO vs. SYSCLK1 FREQUENCY	EXAMPLE FREQUENCY (MHz)
Peripherals (CLKDIV6 Domain)	CLKDIV6	PLLC1 SYSCLK3	1:6	99 MHz

The CLKDIV1:CLKDIV3:CLKDIV6 ratio must be strictly followed by programming the PLL Controller 1 (PLLC1) PLLDIV1, PLLDIV2, and PLLDIV3 registers appropriately (see Table 6-3).

Table 6-3. PLLC1 Programming for CLKDIV1, CLKDIV3, CLKDIV6 Domains

	CLKDIV1 DOMAIN (SYSCLK1)		CLKDIV3 DOMAIN (SYSCLK2)		CLKDIV6 DOMAIN (SYSCLK3)	
	PLL1 Divide-Down	PLLDIV1.RATIO	PLL1 Divide-Down	PLLDIV2.RATIO	PLL1 Divide-Down	PLLDIV3.RATIO
DIV1	/1	0	/3	2	/6	5
DIV2	/2	1	/6	5	/12	11
DIV3	/3	2	/9	8	/18	17

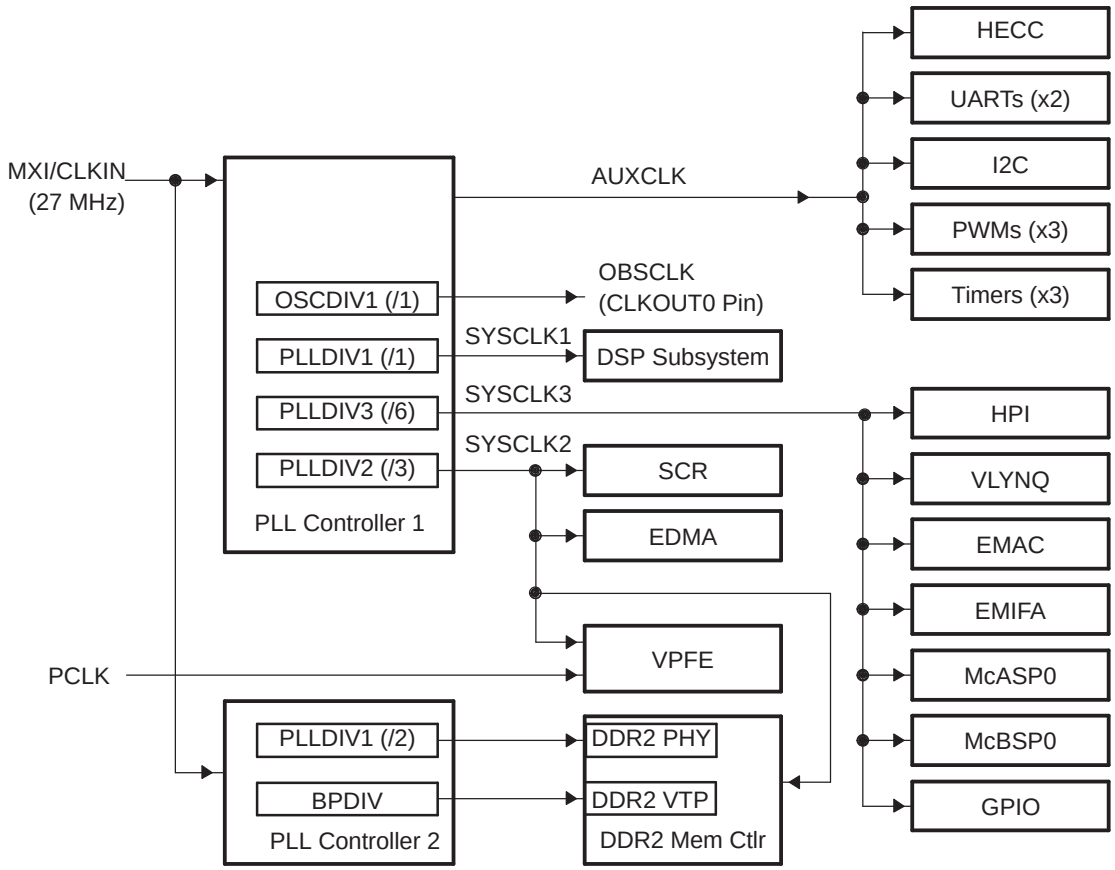

Figure 6-4. PLL1 and PLL2 Clock Domain Block Diagram

For further detail on PLL1 and PLL2, see the structure block diagrams Figure 6-5 and Figure 6-6, respectively.

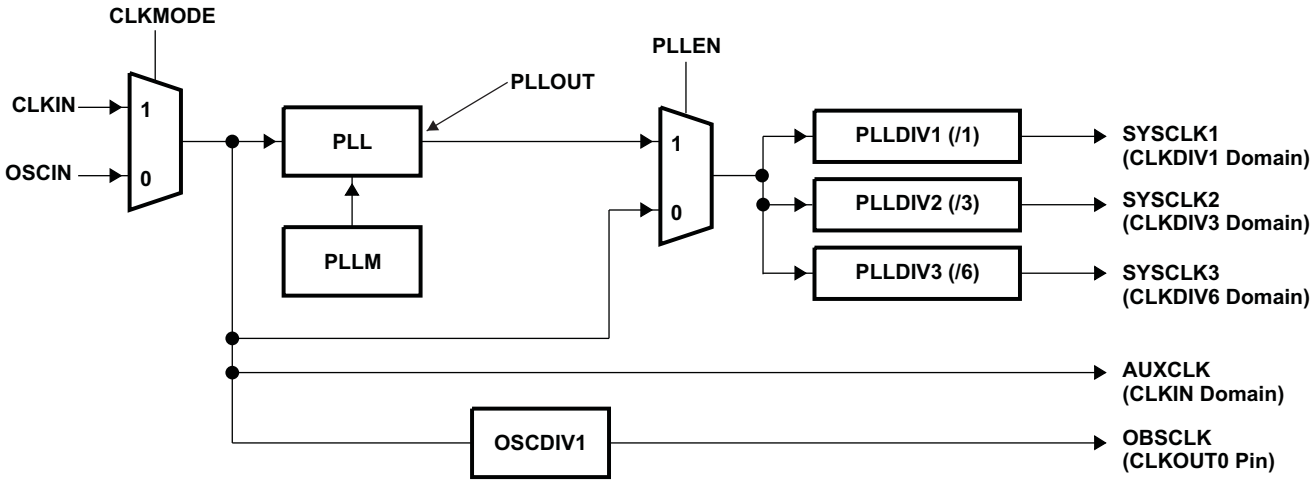

Figure 6-5. PLL1 Structure Block Diagram

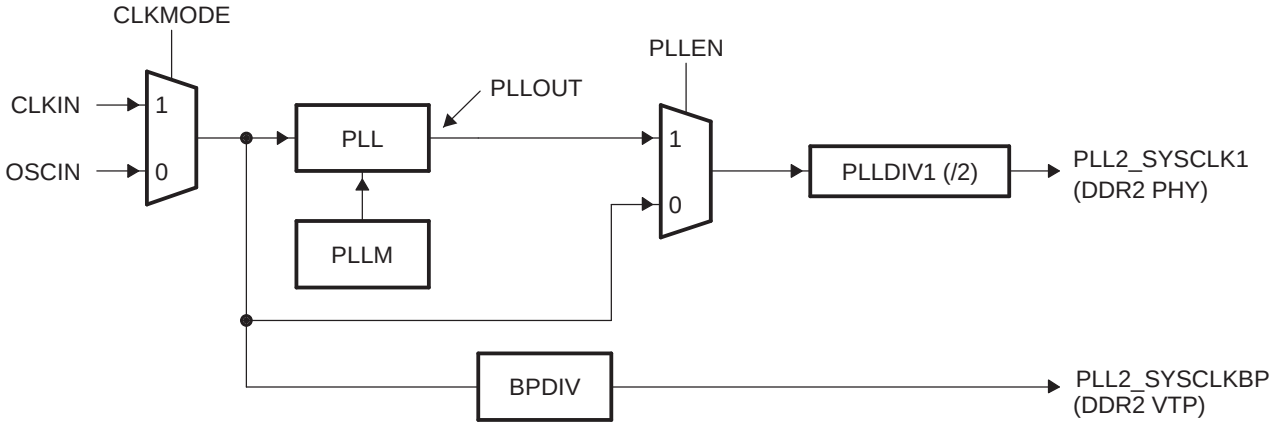

Figure 6-6. PLL2 Structure Block Diagram

6.3.5 Power and Sleep Controller (PSC)

The Power and Sleep Controller (PSC) controls power by turning off unused power domains or by gating off clocks to individual peripherals/modules. The DM6435 device only utilizes the clock gating feature of the PSC for power savings. The PSC consists of a Global PSC (GPSC) and a set of Local PSCs (LPSCs). The GPSC contains memory mapped registers, PSC interrupt control, and a state machine for each peripheral/module. An LPSC is associated with each peripheral/module and provides clock and reset control. The LPSCs for DM6435 are shown in Table 6-4. The PSC Register memory map is given in Table 6-5. For more details on the PSC, see the *TMS320DM643x DMP DSP Subsystem* Reference Guide (literature number SPRU978).

Table 6-4. DM6435 LPSC Assignments

LPSC Number	Peripheral/Module	LPSC Number	Peripheral/Module	LPSC Number	Peripheral/Module
0	VPSS DMA	14	EMIFA	28	TIMER1
1	VPSS MMR	15	Reserved	29	Reserved
2	EDMACC	16	McBSP0	30	Reserved
3	EDMATC0	17	Reserved	31	Reserved
4	EDMATC1	18	I2C	32	Reserved
5	EDMATC2	19	UART0	33	Reserved
6	EMAC Memory Controller	20	UART1	34	Reserved
7	MDIO	21	Reserved	35	Reserved
8	EMAC	22	HECC	36	Reserved
9	McASP0	23	PWM0	37	Reserved
10	Reserved	24	PWM1	38	Reserved
11	VLYNQ	25	PWM2	39	C64x+ CPU
12	HPI	26	GPIO	40	Reserved
13	DDR2 Memory Controller	27	TIMER0		

Table 6-5. PSC Register Memory Map

HEX ADDRESS RANGE	REGISTER ACRONYM	DESCRIPTION
0x01C4 1000	PID	Peripheral Revision and Class Information Register
0x01C4 1004 - 0x01C4 100F	-	Reserved
0x01C4 1010	GBLCTL	Global Control Register
0x01C4 1014	-	Reserved
0x01C4 1018	INTEVAL	Interrupt Evaluation Register
0x01C4 101C - 0x01C4 103F	-	Reserved
0x01C4 1040	MERRPR0	Module Error Pending 0 (mod 0 - 31) Register
0x01C4 1044	MERRPR1	Module Error Pending 1 (mod 32- 63) Register
0x01C4 1048 - 0x01C4 104F	-	Reserved
0x01C4 1050	MERRCR0	Module Error Clear 0 (mod 0 - 31) Register
0x01C4 1054	MERRCR1	Module Error Clear 1 (mod 32 - 63) Register
0x01C4 1058 - 0x01C4 105F	-	Reserved
0x01C4 1060	PERRPR	Power Error Pending Register
0x01C4 1064 - 0x01C4 1067	-	Reserved
0x01C4 1068	PERRCR	Power Error Clear Register
0x01C4 106C - 0x01C4 111F	-	Reserved
0x01C4 1120	PTCMD	Power Domain Transition Command Register
0x01C4 1124 - 0x01C4 1127	-	Reserved

Table 6-5. PSC Register Memory Map (continued)

HEX ADDRESS RANGE	REGISTER ACRONYM	DESCRIPTION
0x01C4 1128	PTSTAT	Power Domain Transition Status Register
0x01C4 112C - 0x01C4 11FF	-	Reserved
0x01C4 1200	PDSTAT0	Power Domain Status 0 Register (Always On)
0x01C4 1204 - 0x01C4 12FF	-	Reserved
0x01C4 1300	PDCTL0	Power Domain Control 0 Register (Always On)
0x01C4 1304 - 0x1C4 150F	-	Reserved
0x01C4 1510	MCKOUT0	Module Clock Output Status (mod 0-31) Register
0x01C4 1514	MCKOUT1	Module Clock Output Status (mod 32-63) Register
0x01C4 1518 - 0x01C4 15FF	-	Reserved
0x01C4 1600 - 0x01C4 17FF	-	Reserved
0x01C4 1800	MDSTAT0	Module Status 0 Register (VPSS DMA)
0x01C4 1804	MDSTAT1	Module Status 1 Register (VPSS MMR)
0x01C4 1808	MDSTAT2	Module Status 2 Register (EDMACC)
0x01C4 180C	MDSTAT3	Module Status 3 Register (EDMATC0)
0x01C4 1810	MDSTAT4	Module Status 4 Register (EDMATC1)
0x01C4 1814	MDSTAT5	Module Status 5 Register (EMACTC2)
0x01C4 1818	MDSTAT6	Module Status 6 Register (EMAC Memory Controller)
0x01C4 181C	MDSTAT7	Module Status 7 Register (MDIO)
0x01C4 1820	MDSTAT8	Module Status 8 Register (EMAC)
0x01C4 1824	MDSTAT9	Module Status 9 Register (McASP0)
0x01C4 1828	-	Reserved
0x01C4 182C	MDSTAT11	Module Status 11 Register (VLYNQ)
0x01C4 1830	MDSTAT12	Module Status 12 Register (HPI)
0x01C4 1834	MDSTAT13	Module Status 13 Register (DDR2)
0x01C4 1838	MDSTAT14	Module Status 14 Register (EMIFA)
0x01C4 183C	-	Reserved
0x01C4 1840	MDSTAT16	Module Status 16 Register (McBSP0)
0x01C4 1844	-	Reserved
0x01C4 1848	MDSTAT18	Module Status 18 Register (I2C)
0x01C4 184C	MDSTAT19	Module Status 19 Register (UART0)
0x01C4 1850	MDSTAT20	Module Status 20 Register (UART1)
0x01C4 1854	-	Reserved
0x01C4 1858	MDSTAT22	Module Status 22 Register (HECC)
0x01C4 185C	MDSTAT23	Module Status 23 Register (PWM0)
0x01C4 1860	MDSTAT24	Module Status 24 Register (PWM1)
0x01C4 1864	MDSTAT25	Module Status 25 Register (PWM2)
0x01C4 1868	MDSTAT26	Module Status 26 Register (GPIO)
0x01C4 186C	MDSTAT27	Module Status 27 Register (TIMER0)
0x01C4 1870	MDSTAT28	Module Status 28 Register (TIMER1)
0x01C4 1874 - 0x01C4 189B	-	Reserved
0x01C4 189C	MDSTAT39	Module Status 39 Register (C64x+ CPU)
0x01C4 18A0	-	Reserved
0x01C4 18A4 - 0x01C4 19FF	-	Reserved
0x01C4 1A00	MDCTL0	Module Control 0 Register (VPSS DMA)
0x01C4 1A04	MDCTL1	Module Control 1 Register (VPSS MMR)
0x01C4 1A08	MDCTL2	Module Control 2 Register (EDMACC)

Table 6-5. PSC Register Memory Map (continued)

HEX ADDRESS RANGE	REGISTER ACRONYM	DESCRIPTION
0x01C4 1A0C	MDCTL3	Module Control 3 Register (EDMATC0)
0x01C4 1A10	MDCTL4	Module Control 4 Register (EDMATC1)
0x01C4 1A14	MDCTL5	Module Control 5 Register (EMACTC2)
0x01C4 1A18	MDCTL6	Module Control 6 Register (EMAC Memory Controller)
0x01C4 1A1C	MDCTL7	Module Control 7 Register (MDIO)
0x01C4 1A20	MDCTL8	Module Control 8 Register (EMAC)
0x01C4 1A24	MDCTL9	Module Control 9 Register (McASP0)
0x01C4 1A28	-	Reserved
0x01C4 1A2C	MDCTL11	Module Control 11 Register (VLYNQ)
0x01C4 1A30	MDCTL12	Module Control 12 Register (HPI)
0x01C4 1A34	MDCTL13	Module Control 13 Register (DDR2)
0x01C4 1A38	MDCTL14	Module Control 14 Register (EMIFA)
0x01C4 1A3C	-	Reserved
0x01C4 1A40	MDCTL16	Module Control 16 Register (McBSP0)
0x01C4 1A44	-	Reserved
0x01C4 1A48	MDCTL18	Module Control 18 Register (I2C)
0x01C4 1A4C	MDCTL19	Module Control 19 Register (UART0)
0x01C4 1A50	MDCTL20	Module Control 20 Register (UART1)
0x01C4 1A54	-	Reserved
0x01C4 1A58	MDCTL22	Module Control 22 Register (HECC)
0x01C4 1A5C	MDCTL23	Module Control 23 Register (PWM0)
0x01C4 1A60	MDCTL24	Module Control 24 Register (PWM1)
0x01C4 1A64	MDCTL25	Module Control 25 Register (PWM2)
0x01C4 1A68	MDCTL26	Module Control 26 Register (GPIO)
0x01C4 1A6C	MDCTL27	Module Control 27 Register (TIMER0)
0x01C4 1A70	MDCTL28	Module Control 28 Register (TIMER1)
0x01C4 1A74 - 0x01C4 1A9B	-	Reserved
0x01C4 1A9C	MDCTL39	Module Control 39 Register (C64x+ CPU)
0x01C4 1AA0	-	Reserved
0x01C4 1AA4 - 0x01C4 1FFF	-	Reserved

6.4 Enhanced Direct Memory Access (EDMA3) Controller

The EDMA controller handles all data transfers between memories and the device slave peripherals on the DM6435 device. These data transfers include cache servicing, non-cacheable memory accesses, user-programmed data transfers, and host accesses. These are summarized as follows:

- Transfer to/from on-chip memories
  - DSP L1D memory
  - DSP L2 memory
- Transfer to/from external storage
  - DDR2 SDRAM
  - NAND flash
  - Asynchronous EMIF (EMIFA)
- Transfer to/from peripherals/hosts
  - VLYNQ
  - HPI
  - McBSP0
  - McASP0
  - PWM
  - UART0/1
  - HECC

The EDMA supports two addressing modes: constant addressing and increment addressing. On the DM6435, constant addressing mode is **not** supported by any peripheral or internal memory. For more information on these two addressing modes, see the *TMS320DM643x DMP Enhanced Direct Memory Access (EDMA3) Controller* User's Guide (literature number SPRU987).

6.4.1 EDMA3 Channel Synchronization Events

The EDMA supports up to 64 EDMA channels which service peripheral devices and external memory. Table 6-6 lists the source of EDMA synchronization events associated with each of the programmable EDMA channels. For the DM6435 device, the association of an event to a channel is fixed; each of the EDMA channels has one specific event associated with it. These specific events are captured in the EDMA event registers (ER, ERH) even if the events are disabled by the EDMA event enable registers (EER, EERH). For more detailed information on the EDMA module and how EDMA events are enabled, captured, processed, linked, chained, and cleared, etc., see the *TMS320DM643x DMP Enhanced Direct Memory Access (EDMA3) Controller* User's Guide (literature number SPRU987).

Table 6-6. DM6435 EDMA Channel Synchronization Events(1)

EDMA CHANNEL	EVENT NAME	EVENT DESCRIPTION
0-1	–	Reserved
2	XEVT0	McBSP0 Transmit Event
3	REVT0	McBSP0 Receive Event
4	–	Reserved
5	–	Reserved
6	HISTEVT	VPSS Histogram Event
7	H3AEVT	VPSS H3A Event
8	PRVUEVT	VPSS Previewer Event
9	RSZEVT	VPSS Resizer Event
10	AXEVTE0	McASP0 Transmit Event Even

(1) In addition to the events shown in this table, each of the 64 channels can also be synchronized with the transfer completion or alternate transfer completion events. For more detailed information on EDMA event-transfer chaining, see the *Document Support* section for the Enhanced Direct Memory Access (EDMA) Controller Reference Guide.

Table 6-6. DM6435 EDMA Channel Synchronization Events (continued)

EDMA CHANNEL	EVENT NAME	EVENT DESCRIPTION
11	AXEVTO0	McASP0 Transmit Event Odd
12	AXEVT0	McASP0 Transmit Event
13	AREVTE0	McASP0 Receive Event Even
14	AREVTO0	McASP0 Receive Event Odd
15	AREVT0	McASP0 Receive Event
16-21	–	Reserved
22	URXEVT0	UART 0 Receive Event
23	UTXEVT0	UART 0 Transmit Event
24	URXEVT1	UART 1 Receive Event
25	UTXEVT1	UART 1 Transmit Event
26	–	Reserved
27	–	Reserved
28	ICREVT	I2C Receive Event
29	ICXEVT	I2C Transmit Event
30-31	–	Reserved
32	GPINT0	GPIO 0 Interrupt
33	GPINT1	GPIO 1 Interrupt
34	GPINT2	GPIO 2 Interrupt
35	GPINT3	GPIO 3 Interrupt
36	GPINT4	GPIO 4 Interrupt
37	GPINT5	GPIO 5 Interrupt
38	GPINT6	GPIO 6 Interrupt
39	GPINT7	GPIO 7 Interrupt
40	GPBNKINT0	GPIO Bank 0 Interrupt
41	GPBNKINT1	GPIO Bank 1 Interrupt
42	GPBNKINT2	GPIO Bank 2 Interrupt
43	GPBNKINT3	GPIO Bank 3 Interrupt
44	GPBNKINT4	GPIO Bank 4 Interrupt
45	GPBNKINT5	GPIO Bank 5 Interrupt
46	GPBNKINT6	GPIO Bank 6 Interrupt
47	–	Reserved
48	TEVTL0	Timer 0 Event Low Interrupt
49	TEVTH0	Timer 0 Event High Interrupt
50	TEVTL1	Timer 1 Event Low Interrupt
51	TEVTH1	Timer 1 Evemt High Interrupt
52	PWM0	PWM 0 Event
53	PWM1	PWM 1 Event
54	PWM2	PWM 2 Event
55-63	–	Reserved

6.4.2 EDMA Peripheral Register Description(s)

Table 6-7 lists the EDMA registers, their corresponding acronyms, and DM6435 device memory locations.

Table 6-7. DM6435 EDMA Registers

HEX ADDRESS	ACRONYM	REGISTER NAME
Channel Controller Registers		
0x01C0 0000 - 0x01C0 0003		Reserved
0x01C0 0004	CCCFG	EDMA3CC Configuration Register
0x01C0 0008 - 0x01C0 01FF		Reserved
Global Registers		
0x01C0 0200	QCHMAP0	QDMA Channel 0 Mapping to PaRAM Register
0x01C0 0204	QCHMAP1	QDMA Channel 1 Mapping to PaRAM Register
0x01C0 0208	QCHMAP2	QDMA Channel 2 Mapping to PaRAM Register
0x01C0 020C	QCHMAP3	QDMA Channel 3 Mapping to PaRAM Register
0x01C0 0210	QCHMAP4	QDMA Channel 4 Mapping to PaRAM Register
0x01C0 0214	QCHMAP5	QDMA Channel 5 Mapping to PaRAM Register
0x01C0 0218	QCHMAP6	QDMA Channel 6 Mapping to PaRAM Register
0x01C0 021C	QCHMAP7	QDMA Channel 7 Mapping to PaRAM Register
0x01C0 0240	DMAQNUM0	DMA Queue Number Register 0 (Channels 00 to 07)
0x01C0 0244	DMAQNUM1	DMA Queue Number Register 1 (Channels 08 to 15)
0x01C0 0248	DMAQNUM2	DMA Queue Number Register 2 (Channels 16 to 23)
0x01C0 024C	DMAQNUM3	DMA Queue Number Register 3 (Channels 24 to 31)
0x01C0 0250	DMAQNUM4	DMA Queue Number Register 4 (Channels 32 to 39)
0x01C0 0254	DMAQNUM5	DMA Queue Number Register 5 (Channels 40 to 47)
0x01C0 0258	DMAQNUM6	DMA Queue Number Register 6 (Channels 48 to 55)
0x01C0 025C	DMAQNUM7	DMA Queue Number Register 7 (Channels 56 to 63)
0x01C0 0260	QDMAQNUM	CC QDMA Queue Number
0x01C0 0264 - 0x01C0 0283	–	Reserved
0x01C0 0284	QUEPRI	Queue Priority Register
0x01C0 0288 - 0x01C0 02FF	–	Reserved
0x01C0 0300	EMR	Event Missed Register
0x01C0 0304	EMRH	Event Missed Register High
0x01C0 0308	EMCR	Event Missed Clear Register
0x01C0 030C	EMCRH	Event Missed Clear Register High
0x01C0 0310	QEMR	QDMA Event Missed Register
0x01C0 0314	QEMCR	QDMA Event Missed Clear Register
0x01C0 0318	CCERR	EDMA3CC Error Register
0x01C0 031C	CCERRCLR	EDMA3CC Error Clear Register
0x01C0 0320	EEVAL	Error Evaluate Register
0x01C0 0340	DRAE0	DMA Region Access Enable Register for Region 0
0x01C0 0344	DRAEH0	DMA Region Access Enable Register High for Region 0
0x01C0 0348	DRAE1	DMA Region Access Enable Register for Region 1
0x01C0 034C	DRAEH1	DMA Region Access Enable Register High for Region 1
0x01C0 0350	–	Reserved
0x01C0 0354	–	Reserved
0x01C0 0358	–	Reserved
0x01C0 035C	–	Reserved
0x01C0 0360 - 0x01C0 037C	–	Reserved
0x01C0 0380	QRAE0	QDMA Region Access Enable Register for Region 0

Table 6-7. DM6435 EDMA Registers (continued)

HEX ADDRESS	ACRONYM	REGISTER NAME
0x01C0 0384	QRAE1	QDMA Region Access Enable Register for Region 1
0x01C0 0388	–	Reserved
0x01C0 038C	–	Reserved
0x01C0 0390 - 0x01C0 039C	–	Reserved
0x01C0 0400	Q0E0	Event Q0 Entry 0 Register
0x01C0 0404	Q0E1	Event Q0 Entry 1 Register
0x01C0 0408	Q0E2	Event Q0 Entry 2 Register
0x01C0 040C	Q0E3	Event Q0 Entry 3 Register
0x01C0 0410	Q0E4	Event Q0 Entry 4 Register
0x01C0 0414	Q0E5	Event Q0 Entry 5 Register
0x01C0 0418	Q0E6	Event Q0 Entry 6 Register
0x01C0 041C	Q0E7	Event Q0 Entry 7 Register
0x01C0 0420	Q0E8	Event Q0 Entry 8 Register
0x01C0 0424	Q0E9	Event Q0 Entry 9 Register
0x01C0 0428	Q0E10	Event Q0 Entry 10 Register
0x01C0 042C	Q0E11	Event Q0 Entry 11 Register
0x01C0 0430	Q0E12	Event Q0 Entry 12 Register
0x01C0 0434	Q0E13	Event Q0 Entry 13 Register
0x01C0 0438	Q0E14	Event Q0 Entry 14 Register
0x01C0 043C	Q0E15	Event Q0 Entry 15 Register
0x01C0 0440	Q1E0	Event Q1 Entry 0 Register
0x01C0 0444	Q1E1	Event Q1 Entry 1 Register
0x01C0 0448	Q1E2	Event Q1 Entry 2 Register
0x01C0 044C	Q1E3	Event Q1 Entry 3 Register
0x01C0 0450	Q1E4	Event Q1 Entry 4 Register
0x01C0 0454	Q1E5	Event Q1 Entry 5 Register
0x01C0 0458	Q1E6	Event Q1 Entry 6 Register
0x01C0 045C	Q1E7	Event Q1 Entry 7 Register
0x01C0 0460	Q1E8	Event Q1 Entry 8 Register
0x01C0 0464	Q1E9	Event Q1 Entry 9 Register
0x01C0 0468	Q1E10	Event Q1 Entry 10 Register
0x01C0 046C	Q1E11	Event Q1 Entry 11 Register
0x01C0 0470	Q1E12	Event Q1 Entry 12 Register
0x01C0 0474	Q1E13	Event Q1 Entry 13 Register
0x01C0 0478	Q1E14	Event Q1 Entry 14 Register
0x01C0 047C	Q1E15	Event Q1 Entry 15 Register
0x01C0 0480	Q2E0	Event Q2 Entry 0 Register
0x01C0 0484	Q2E1	Event Q2 Entry 1 Register
0x01C0 0488	Q2E2	Event Q2 Entry 2 Register
0x01C0 048C	Q2E3	Event Q2 Entry 3 Register
0x01C0 0490	Q2E4	Event Q2 Entry 4 Register
0x01C0 0494	Q2E5	Event Q2 Entry 5 Register
0x01C0 0498	Q2E6	Event Q2 Entry 6 Register
0x01C0 049C	Q2E7	Event Q2 Entry 7 Register
0x01C0 04A0	Q2E8	Event Q2 Entry 8 Register
0x01C0 04A4	Q2E9	Event Q2 Entry 9 Register
0x01C0 04A8	Q2E10	Event Q2 Entry 10 Register

Table 6-7. DM6435 EDMA Registers (continued)

HEX ADDRESS	ACRONYM	REGISTER NAME
0x01C0 04AC	Q2E11	Event Q2 Entry 11 Register
0x01C0 04B0	Q2E12	Event Q2 Entry 12 Register
0x01C0 04B4	Q2E13	Event Q2 Entry 13 Register
0x01C0 04B8	Q2E14	Event Q2 Entry 14 Register
0x01C0 04BC	Q2E15	Event Q2 Entry 15 Register
0x01C0 04C0 - 0x01C0 05FF		Reserved
0x01C0 0600	QSTAT0	Queue 0 Status Register
0x01C0 0604	QSTAT1	Queue 1 Status Register
0x01C0 0608	QSTAT2	Queue 2 Status Register
0x01C0 060C - 0x01C0 061F		Reserved
0x01C0 0620	QWMTHRA	Queue Watermark Threshold A Register for Q[2:0]
0x01C0 0624	–	Reserved
0x01C0 0640	CCSTAT	EDMA3CC Status Register
0x01C0 0644 - 0x01C0 0FFF		Reserved
Global Channel Registers		
0x01C0 1000	ER	Event Register
0x01C0 1004	ERH	Event Register High
0x01C0 1008	ECR	Event Clear Register
0x01C0 100C	ECRH	Event Clear Register High
0x01C0 1010	ESR	Event Set Register
0x01C0 1014	ESRH	Event Set Register High
0x01C0 1018	CER	Chained Event Register
0x01C0 101C	CERH	Chained Event Register High
0x01C0 1020	EER	Event Enable Register
0x01C0 1024	EERH	Event Enable Register High
0x01C0 1028	EECR	Event Enable Clear Register
0x01C0 102C	EECRH	Event Enable Clear Register High
0x01C0 1030	EESR	Event Enable Set Register
0x01C0 1034	EESRH	Event Enable Set Register High
0x01C0 1038	SER	Secondary Event Register
0x01C0 103C	SERH	Secondary Event Register High
0x01C0 1040	SECR	Secondary Event Clear Register
0x01C0 1044	SECRH	Secondary Event Clear Register High
0x01C0 1048 - 0x01C0 104F		Reserved
0x01C0 1050	IER	Interrupt Enable Register
0x01C0 1054	IERH	Interrupt Enable Register High
0x01C0 1058	IECR	Interrupt Enable Clear Register
0x01C0 105C	IECRH	Interrupt Enable Clear Register High
0x01C0 1060	IESR	Interrupt Enable Set Register
0x01C0 1064	IESRH	Interrupt Enable Set Register High
0x01C0 1068	IPR	Interrupt Pending Register
0x01C0 106C	IPRH	Interrupt Pending Register High
0x01C0 1070	ICR	Interrupt Clear Register
0x01C0 1074	ICRH	Interrupt Clear Register High
0x01C0 1078	IEVAL	Interrupt Evaluate Register
0x01C0 1080	QER	QDMA Event Register
0x01C0 1084	QEER	QDMA Event Enable Register

Table 6-7. DM6435 EDMA Registers (continued)

HEX ADDRESS	ACRONYM	REGISTER NAME
0x01C0 1088	QEECR	QDMA Event Enable Clear Register
0x01C0 108C	QEESR	QDMA Event Enable Set Register
0x01C0 1090	QSER	QDMA Secondary Event Register
0x01C0 1094	QSECR	QDMA Secondary Event Clear Register
0x01C0 1098 - 0x01C0 1FFF		Reserved
Shadow Region 0 Channel Registers		
0x01C0 2000	ER	Event Register
0x01C0 2004	ERH	Event Register High
0x01C0 2008	ECR	Event Clear Register
0x01C0 200C	ECRH	Event Clear Register High
0x01C0 2010	ESR	Event Set Register
0x01C0 2014	ESRH	Event Set Register High
0x01C0 2018	CER	Chained Event Register
0x01C0 201C	CERH	Chained Event Register High
0x01C0 2020	EER	Event Enable Register
0x01C0 2024	EERH	Event Enable Register High
0x01C0 2028	EECR	Event Enable Clear Register
0x01C0 202C	EECRH	Event Enable Clear Register High
0x01C0 2030	EESR	Event Enable Set Register
0x01C0 2034	EESRH	Event Enable Set Register High
0x01C0 2038	SER	Secondary Event Register
0x01C0 203C	SERH	Secondary Event Register High
0x01C0 2040	SECR	Secondary Event Clear Register
0x01C0 2044	SECRH	Secondary Event Clear Register High
0x01C0 2048 - 0x01C0 204C	-	Reserved
0x01C0 2050	IER	Interrupt Enable Register
0x01C0 2054	IERH	Interrupt Enable Register High
0x01C0 2058	IECR	Interrupt Enable Clear Register
0x01C0 205C	IECRH	Interrupt Enable Clear Register High
0x01C0 2060	IESR	Interrupt Enable Set Register
0x01C0 2064	IESRH	Interrupt Enable Set Register High
0x01C0 2068	IPR	Interrupt Pending Register
0x01C0 206C	IPRH	Interrupt Pending Register High
0x01C0 2070	ICR	Interrupt Clear Register
0x01C0 2074	ICRH	Interrupt Clear Register High
0x01C0 2078	IEVAL	Interrupt Evaluate Register
0x01C0 207C	-	Reserved
0x01C0 2080	QER	QDMA Event Register
0x01C0 2084	QEER	QDMA Event Enable Register
0x01C0 2088	QEECR	QDMA Event Enable Clear Register
0x01C0 208C	QEESR	QDMA Event Enable Set Register
0x01C0 2090	QSER	QDMA Secondary Event Register
0x01C0 2094	QSECR	QDMA Secondary Event Clear Register
0x01C0 2098 - 0x01C0 21FC	-	Reserved
Shadow Region 1 Channel Registers		
0x01C0 2200	ER	Event Register
0x01C0 2204	ERH	Event Register High

Table 6-7. DM6435 EDMA Registers (continued)

HEX ADDRESS	ACRONYM	REGISTER NAME
0x01C0 2208	ECR	Event Clear Register
0x01C0 220C	ECRH	Event Clear Register High
0x01C0 2210	ESR	Event Set Register
0x01C0 2214	ESRH	Event Set Register High
0x01C0 2218	CER	Chained Event Register
0x01C0 221C	CERH	Chained Event Register High
0x01C0 2220	EER	Event Enable Register
0x01C0 2224	EERH	Event Enable Register High
0x01C0 2228	EECR	Event Enable Clear Register
0x01C0 222C	EECRH	Event Enable Clear Register High
0x01C0 2230	EESR	Event Enable Set Register
0x01C0 2234	EESRH	Event Enable Set Register High
0x01C0 2238	SER	Secondary Event Register
0x01C0 223C	SERH	Secondary Event Register High
0x01C0 2240	SECR	Secondary Event Clear Register
0x01C0 2244	SECRH	Secondary Event Clear Register High
0x01C0 2248 - 0x01C0 224C	-	Reserved
0x01C0 2250	IER	Interrupt Enable Register
0x01C0 2254	IERH	Interrupt Enable Register High
0x01C0 2258	IECR	Interrupt Enable Clear Register
0x01C0 225C	IECRH	Interrupt Enable Clear Register High
0x01C0 2260	IESR	Interrupt Enable Set Register
0x01C0 2264	IESRH	Interrupt Enable Set Register High
0x01C0 2268	IPR	Interrupt Pending Register
0x01C0 226C	IPRH	Interrupt Pending Register High
0x01C0 2270	ICR	Interrupt Clear Register
0x01C0 2274	ICRH	Interrupt Clear Register High
0x01C0 2278	IEVAL	Interrupt Evaluate Register
0x01C0 227C	-	Reserved
0x01C0 2280	QER	QDMA Event Register
0x01C0 2284	QEER	QDMA Event Enable Register
0x01C0 2288	QEECR	QDMA Event Enable Clear Register
0x01C0 228C	QEESR	QDMA Event Enable Set Register
0x01C0 2290	QSER	QDMA Secondary Event Register
0x01C0 2294	QSECR	QDMA Secondary Event Clear Register
0x01C0 2298 - 0x01C0 23FC	-	Reserved
0x01C0 2400 - 0x01C0 25FC	-	Reserved
0x01C0 2600 - 0x01C0 27FC	-	Reserved
0x01C0 2800 - 0x01C0 29FC	-	Reserved
0x01C0 2A00 - 0x01C0 2BFC	-	Reserved
0x01C0 2C00 - 0x01C0 2DFC	-	Reserved
0x01C0 2E00 - 0x01C0 2FFC	-	Reserved
0x01C0 2FFD - 0x01C0 3FFF	-	Reserved
0x01C0 4000 - 0x01C0 4FFF	-	Parameter Set RAM (see Table 6-8)
0x01C0 5000 - 0x01C0 7FFF	-	Reserved
0x01C0 8000 - 0x01C0 FFFF	-	Reserved
Transfer Controller 0 Registers		

Table 6-7. DM6435 EDMA Registers (continued)

HEX ADDRESS	ACRONYM	REGISTER NAME
0x01C1 0000	-	Reserved
0x01C1 0004	TCCFG	EDMA3 TC0 Configuration Register
0x01C1 0008 - 0x01C1 00FF	-	Reserved
0x01C1 0100	TCSTAT	EDMA3 TC0 Channel Status Register
0x01C1 0104 - 0x01C1 0110	-	Reserved
0x01C1 0114 - 0x01C1 011F	-	Reserved
0x01C1 0120	ERRSTAT	EDMA3 TC0 Error Status Register
0x01C1 0124	ERREN	EDMA3 TC0 Error Enable Register
0x01C1 0128	ERRCLR	EDMA3 TC0 Error Clear Register
0x01C1 012C	ERRDET	EDMA3 TC0 Error Details Register
0x01C1 0130	ERRCMD	EDMA3 TC0 Error Interrupt Command Register
0x01C1 0134 - 0x01C1 013F	-	Reserved
0x01C1 0140	RDRATE	EDMA3 TC0 Read Command Rate Register
0x01C1 0144 - 0x01C1 01FF	-	Reserved
0x01C1 0200 - 0x01C1 023F	-	Reserved
0x01C1 0240	SAOPT	EDMA3 TC0 Source Active Options Register
0x01C1 0244	SASRC	EDMA3 TC0 Source Active Source Address Register
0x01C1 0248	SACNT	EDMA3 TC0 Source Active Count Register
0x01C1 024C	SADST	EDMA3 TC0 Source Active Destination Address Register
0x01C1 0250	SABIDX	EDMA3 TC0 Active B-Index Register
0x01C1 0254	SAMPPRXY	EDMA3 TC0 Source Active Memory Protection Proxy Register
0x01C1 0258	SACNTRLD	EDMA3 TC0 Source Active Count Reload Register
0x01C1 025C	SASRCBREF	EDMA3 TC0 Source Active Source Address B-Reference Register
0x01C1 0260	SADSTBREF	EDMA3 TC0 Source Active Destination Address B-Reference Register
0x01C1 0264 - 0x01C1 027F	-	Reserved
0x01C1 0280	DFCNTRLD	EDMA3 TC0 Destination FIFO Set Count Reload Register
0x01C1 0284	DFSRCBREF	EDMA3 TC0 Destination FIFO Set Source Address B-Reference Register
0x01C1 0288	DFDSTBREF	EDMA3 TC0 Destination FIFO Set Destination Address B-Reference Register
0x01C1 028C - 0x01C1 02FF	-	Reserved
0x01C1 0300	DFOPT0	EDMA3 TC0 Destination FIFO Options Register 0
0x01C1 0304	DFSRC0	EDMA3 TC0 Destination FIFO Source Address Register 0
0x01C1 0308	DFCNT0	EDMA3 TC0 Destination FIFO Count Register 0
0x01C1 030C	DFDST0	EDMA3 TC0 Destination FIFO Destination Address Register 0
0x01C1 0310	DFBIDX0	EDMA3 TC0 Destination FIFO B-Index Register 0
0x01C1 0314	DFMPPRXY0	EDMA3 TC0 Destination FIFO Memory Protection Proxy Register 0
0x01C1 0318 - 0x01C1 033F	-	Reserved
0x01C1 0340	DFOPT1	EDMA3 TC0 Destination FIFO Options Register 1
0x01C1 0344	DFSRC1	EDMA3 TC0 Destination FIFO Source Address Register 1
0x01C1 0348	DFCNT1	EDMA3 TC0 Destination FIFO Count Register 1
0x01C1 034C	DFDST1	EDMA3 TC0 Destination FIFO Destination Address Register 1
0x01C1 0350	DFBIDX1	EDMA3 TC0 Destination FIFO B-Index Register 1
0x01C1 0354	DFMPPRXY1	EDMA3 TC0 Destination FIFO Memory Protection Proxy Register 1
0x01C1 0358 - 0x01C1 037F	-	Reserved
0x01C1 0380	DFOPT2	EDMA3 TC0 Destination FIFO Options Register 2
0x01C1 0384	DFSRC2	EDMA3 TC0 Destination FIFO Source Address Register 2
0x01C1 0388	DFCNT2	EDMA3 TC0 Destination FIFO Count Register 2

Table 6-7. DM6435 EDMA Registers (continued)

HEX ADDRESS	ACRONYM	REGISTER NAME
0x01C1 038C	DFDST2	EDMA3 TC0 Destination FIFO Destination Address Register 2
0x01C1 0390	DFBIDX2	EDMA3 TC0 Destination FIFO B-Index Register 2
0x01C1 0394	DFMPPRXY2	EDMA3 TC0 Destination FIFO Memory Protection Proxy Register 2
0x01C1 0398 - 0x01C1 03BF	-	Reserved
0x01C1 03C0	DFOPT3	EDMA3 TC0 Destination FIFO Options Register 3
0x01C1 03C4	DFSRC3	EDMA3 TC0 Destination FIFO Source Address Register 3
0x01C1 03C8	DFCNT3	EDMA3 TC0 Destination FIFO Count Register 3
0x01C1 03CC	DFDST3	EDMA3 TC0 Destination FIFO Destination Address Register 3
0x01C1 03D0	DFBIDX3	EDMA3 TC0 Destination FIFO B-Index Register 3
0x01C1 03D4	DFMPPRXY3	EDMA3 TC0 Destination FIFO Memory Protection Proxy Register 3
0x01C1 03D8 - 0x01C1 03FF	-	Reserved
Transfer Controller 1 Registers		
0x01C1 0400	-	Reserved
0x01C1 0404	TCCFG	EDMA3 TC1 Configuration Register
0x01C1 0408 - 0x01C1 04FF	-	Reserved
0x01C1 0500	TCSTAT	EDMA3 TC1 Channel Status Register
0x01C1 0504 - 0x01C1 0510	-	Reserved
0x01C1 0514 - 0x01C1 051F	-	Reserved
0x01C1 0520	ERRSTAT	EDMA3 TC1 Error Status Register
0x01C1 0524	ERREN	EDMA3 TC1 Error Enable Register
0x01C1 0528	ERRCLR	EDMA3 TC1 Error Clear Register
0x01C1 052C	ERRDET	EDMA3 TC1 Error Details Register
0x01C1 0530	ERRCMD	EDMA3 TC1 Error Interrupt Command Register
0x01C1 0534 - 0x01C1 053F	-	Reserved
0x01C1 0540	RDRATE	EDMA3 TC1 Read Command Rate Register
0x01C1 0544 - 0x01C1 05FF	-	Reserved
0x01C1 0600 - 0x01C1 063F	-	Reserved
0x01C1 0640	SAOPT	EDMA3 TC1 Source Active Options Register
0x01C1 0644	SASRC	EDMA3 TC1 Source Active Source Address Register
0x01C1 0648	SACNT	EDMA3 TC1 Source Active Count Register
0x01C1 064C	SADST	EDMA3 TC1 Source Active Destination Address Register
0x01C1 0650	SABIDX	EDMA3 TC1 Active B-Index Register
0x01C1 0654	SAMPPRXY	EDMA3 TC1 Source Active Memory Protection Proxy Register
0x01C1 0658	SACNTRLD	EDMA3 TC1 Source Active Count Reload Register
0x01C1 065C	SASRCBREF	EDMA3 TC1 Source Active Source Address B-Reference Register
0x01C1 0660	SADSTBREF	EDMA3 TC1 Source Active Destination Address B-Reference Register
0x01C1 0664 - 0x01C1 067F	-	Reserved
0x01C1 0680	DFCNTRLD	EDMA3 TC1 Destination FIFO Set Count Reload Register
0x01C1 0684	DFSRCBREF	EDMA3 TC1 Destination FIFO Set Source Address B-Reference Register
0x01C1 0688	DFDSTBREF	EDMA3 TC1 Destination FIFO Set Destination Address B-Reference Register
0x01C1 068C - 0x01C1 06FF	-	Reserved
0x01C1 0700	DFOPT0	EDMA3 TC1 Destination FIFO Options Register 0
0x01C1 0704	DFSRC0	EDMA3 TC1 Destination FIFO Source Address Register 0
0x01C1 0708	DFCNT0	EDMA3 TC1 Destination FIFO Count Register 0
0x01C1 070C	DFDST0	EDMA3 TC1 Destination FIFO Destination Address Register 0
0x01C1 0710	DFBIDX0	EDMA3 TC1 Destination FIFO B-Index Register 0

Table 6-7. DM6435 EDMA Registers (continued)

HEX ADDRESS	ACRONYM	REGISTER NAME
0x01C1 0714	DFMPPRXY0	EDMA3 TC1 Destination FIFO Memory Protection Proxy Register 0
0x01C1 0718 - 0x01C1 073F	-	Reserved
0x01C1 0740	DFOPT1	EDMA3 TC1 Destination FIFO Options Register 1
0x01C1 0744	DFSRC1	EDMA3 TC1 Destination FIFO Source Address Register 1
0x01C1 0748	DFCNT1	EDMA3 TC1 Destination FIFO Count Register 1
0x01C1 074C	DFDST1	EDMA3 TC1 Destination FIFO Destination Address Register 1
0x01C1 0750	DFBIDX1	EDMA3 TC1 Destination FIFO B-Index Register 1
0x01C1 0754	DFMPPRXY1	EDMA3 TC1 Destination FIFO Memory Protection Proxy Register 1
0x01C1 0758 - 0x01C1 077F	-	Reserved
0x01C1 0780	DFOPT2	EDMA3 TC1 Destination FIFO Options Register 2
0x01C1 0784	DFSRC2	EDMA3 TC1 Destination FIFO Source Address Register 2
0x01C1 0788	DFCNT2	EDMA3 TC1 Destination FIFO Count Register 2
0x01C1 078C	DFDST2	EDMA3 TC1 Destination FIFO Destination Address Register 2
0x01C1 0790	DFBIDX2	EDMA3 TC1 Destination FIFO B-Index Register 2
0x01C1 0794	DFMPPRXY2	EDMA3 TC1 Destination FIFO Memory Protection Proxy Register 2
0x01C1 0798 - 0x01C1 07BF	-	Reserved
0x01C1 07C0	DFOPT3	EDMA3 TC1 Destination FIFO Options Register 3
0x01C1 07C4	DFSRC3	EDMA3 TC1 Destination FIFO Source Address Register 3
0x01C1 07C8	DFCNT3	EDMA3 TC1 Destination FIFO Count Register 3
0x01C1 07CC	DFDST3	EDMA3 TC1 Destination FIFO Destination Address Register 3
0x01C1 07D0	DFBIDX3	EDMA3 TC1 Destination FIFO B-Index Register 3
0x01C1 07D4	DFMPPRXY3	EDMA3 TC1 Destination FIFO Memory Protection Proxy Register 3
0x01C1 07D8 - 0x01C1 07FF	-	Reserved
Transfer Controller 2 Registers		
0x01C1 0800	-	Reserved
0x01C1 0804	TCCFG	EDMA3 TC2 Configuration Register
0x01C1 0808 - 0x01C1 08FF	-	Reserved
0x01C1 0900	TCSTAT	EDMA3 TC2 Channel Status Register
0x01C1 0904 - 0x01C1 0910	-	Reserved
0x01C1 0914 - 0x01C1 091F	-	Reserved
0x01C1 0920	ERRSTAT	EDMA3 TC2 Error Status Register
0x01C1 0924	ERREN	EDMA3 TC2 Error Enable Register
0x01C1 0928	ERRCLR	EDMA3 TC2 Error Clear Register
0x01C1 092C	ERRDET	EDMA3 TC2 Error Details Register
0x01C1 0930	ERRCMD	EDMA3 TC2 Error Interrupt Command Register
0x01C1 0934 - 0x01C1 093F	-	Reserved
0x01C1 0940	RDRATE	EDMA3 TC2 Read Command Rate Register
0x01C1 0944 - 0x01C1 09FF	-	Reserved
0x01C1 0A00 - 0x01C1 0A3F	-	Reserved
0x01C1 0A40	SAOPT	EDMA3 TC2 Source Active Options Register
0x01C1 0A44	SASRC	EDMA3 TC2 Source Active Source Address Register
0x01C1 0A48	SACNT	EDMA3 TC2 Source Active Count Register
0x01C1 0A4C	SADST	EDMA3 TC2 Source Active Destination Address Register
0x01C1 0A50	SABIDX	EDMA3 TC2 Active B-Index Register
0x01C1 0A54	SAMPPRXY	EDMA3 TC2 Source Active Memory Protection Proxy Register
0x01C1 0A58	SACNTRLD	EDMA3 TC2 Source Active Count Reload Register
0x01C1 0A5C	SASRCBREF	EDMA3 TC2 Source Active Source Address B-Reference Register

Table 6-7. DM6435 EDMA Registers (continued)

HEX ADDRESS	ACRONYM	REGISTER NAME
0x01C1 0A60	SADSTBREF	EDMA3 TC2 Source Active Destination Address B-Reference Register
0x01C1 0A64 - 0x01C1 0A7F	-	Reserved
0x01C1 0A80	DFCNTRLD	EDMA3 TC2 Destination FIFO Set Count Reload Register
0x01C1 0A84	DFSRCBREF	EDMA3 TC2 Destination FIFO Set Source Address B-Reference Register
0x01C1 0A88	DFDSTBREF	EDMA3 TC2 Destination FIFO Set Destination Address B-Reference Register
0x01C1 0A8C - 0x01C1 0AFF	-	Reserved
0x01C1 0B00	DFOPT0	EDMA3 TC2 Destination FIFO Options Register 0
0x01C1 0B04	DFSRC0	EDMA3 TC2 Destination FIFO Source Address Register 0
0x01C1 0B08	DFCNT0	EDMA3 TC2 Destination FIFO Count Register 0
0x01C1 0B0C	DFDST0	EDMA3 TC2 Destination FIFO Destination Address Register 0
0x01C1 0B10	DFBIDX0	EDMA3 TC2 Destination FIFO B-Index Register 0
0x01C1 0B14	DFMPPRXY0	EDMA3 TC2 Destination FIFO Memory Protection Proxy Register 0
0x01C1 0B18 - 0x01C1 0B3F	-	Reserved
0x01C1 0B40	DFOPT1	EDMA3 TC2 Destination FIFO Options Register 1
0x01C1 0B44	DFSRC1	EDMA3 TC2 Destination FIFO Source Address Register 1
0x01C1 0B48	DFCNT1	EDMA3 TC2 Destination FIFO Count Register 1
0x01C1 0B4C	DFDST1	EDMA3 TC2 Destination FIFO Destination Address Register 1
0x01C1 0B50	DFBIDX1	EDMA3 TC2 Destination FIFO B-Index Register 1
0x01C1 0B54	DFMPPRXY1	EDMA3 TC2 Destination FIFO Memory Protection Proxy Register 1
0x01C1 0B58 - 0x01C1 0B7F	-	Reserved
0x01C1 0B80	DFOPT2	EDMA3 TC2 Destination FIFO Options Register 2
0x01C1 0B84	DFSRC2	EDMA3 TC2 Destination FIFO Source Address Register 2
0x01C1 0B88	DFCNT2	EDMA3 TC2 Destination FIFO Count Register 2
0x01C1 0B8C	DFDST2	EDMA3 TC2 Destination FIFO Destination Address Register 2
0x01C1 0B90	DFBIDX2	EDMA3 TC2 Destination FIFO B-Index Register 2
0x01C1 0B94	DFMPPRXY2	EDMA3 TC2 Destination FIFO Memory Protection Proxy Register 2
0x01C1 0B98 - 0x01C1 0BBF	-	Reserved
0x01C1 0BC0	DFOPT3	EDMA3 TC2 Destination FIFO Options Register 3
0x01C1 0BC4	DFSRC3	EDMA3 TC2 Destination FIFO Source Address Register 3
0x01C1 0BC8	DFCNT3	EDMA3 TC2 Destination FIFO Count Register 3
0x01C1 0BCC	DFDST3	EDMA3 TC2 Destination FIFO Destination Address Register 3
0x01C1 0BD0	DFBIDX3	EDMA3 TC2 Destination FIFO B-Index Register 3
0x01C1 0BD4	DFMPPRXY3	EDMA3 TC2 Destination FIFO Memory Protection Proxy Register 3
0x01C1 0BD8 - 0x01C1 0BFF	-	Reserved

Table 6-8 shows an abbreviation of the set of registers which make up the parameter set for each of 128 EDMA events. Each of the parameter register sets consist of 8 32-bit word entries. Table 6-9 shows the parameter set entry registers with relative memory address locations within each of the parameter sets.

Table 6-8. EDMA Parameter Set RAM

HEX ADDRESS RANGE	DESCRIPTION
0x01C0 4000 - 0x01C0 401F	Parameters Set 0 (8 32-bit words)
0x01C0 4020 - 0x01C0 403F	Parameters Set 1 (8 32-bit words)
0x01C0 4040 - 0x01C0 405F	Parameters Set 2 (8 32-bit words)
0x01C0 4060 - 0x01C0 407F	Parameters Set 3 (8 32-bit words)
0x01C0 4080 - 0x01C0 409F	Parameters Set 4 (8 32-bit words)
0x01C0 40A0 - 0x01C0 40BF	Parameters Set 5 (8 32-bit words)
...	...
0x01C0 4FC0 - 0x01C0 4FDF	Parameters Set 126 (8 32-bit words)
0x01C0 4FE0 - 0x01C0 4FFF	Parameters Set 127 (8 32-bit words)

Table 6-9. Parameter Set Entries

HEX OFFSET ADDRESS WITHIN THE PARAMETER SET	ACRONYM	PARAMETER ENTRY
0x0000	OPT	Option
0x0004	SRC	Source Address
0x0008	A_B_CNT	A Count, B Count
0x000C	DST	Destination Address
0x0010	SRC_DST_BIDX	Source B Index, Destination B Index
0x0014	LINK_BCNTRLD	Link Address, B Count Reload
0x0018	SRC_DST_CIDX	Source C Index, Destination C Index
0x001C	CCNT	C Count

6.5 Reset

The reset controller detects the different type of resets supported on the DM6435 device and manages the distribution of those resets throughout the device.

The DM6435 device has several types of device-level global resets - power-on reset, warm reset, and max reset. Table 6-10 explains further the types of reset, the reset initiator, and the effects of each reset on the chip. See Section 6.5.9, *Reset Electrical Data/Timing*, for more information on the effects of each reset on the PLL controllers and their clocks.

Table 6-10. Device-Level Global Reset Types

TYPE	INITIATOR	EFFECT(s)
Power-on Reset (POR)	$\overline{\text{POR}}$ pin	Global chip reset (Cold reset). Activates the POR signal on chip, which resets the entire chip including the emulation logic. The power-on reset ($\overline{\text{POR}}$) pin ***must*** be driven low during power ramp of the device. Device boot and configuration pin are latched.
Warm Reset	$\overline{\text{RESET}}$ pin	Resets everything except for the emulation logic. Emulator stays alive during Warm Reset. Device boot and configuration pin are latched.
Max Reset	Emulator, WD Timer (Timer 2)	Same as a Warm Reset, except the DM6435 device boot and configuration pins are ***not*** re-latched.

In addition to device-level global resets, the PSC provides the capability to cause local resets to peripherals and/or the CPU.

6.5.1 Power-on Reset ($\overline{\text{POR}}$ Pin)

Power-on Reset (POR) is initiated by the $\overline{\text{POR}}$ pin and is used to reset the entire chip, including the emulation logic. Power-on Reset is also referred to as a cold reset since the device usually goes through a power-up cycle. During power-up, the $\overline{\text{POR}}$ pin must be asserted (driven low) until the power supplies have reached their normal operating conditions. If an external 27-MHz oscillator is used on the MXI/CLKIN pin, the source clock should also be running at the correct frequency prior to de-asserting the $\overline{\text{POR}}$ pin. **Note:** A device power-up cycle is not required to initiate a Power-on Reset.

The following sequence ***must*** be followed during a Power-on Reset.

1. Wait for the power supplies to reach normal operating conditions while keeping the $\overline{\text{POR}}$ pin asserted (driven low).
2. Wait for the input clock source to be stable while keeping the $\overline{\text{POR}}$ pin asserted (low).
3. Once the power supplies and the input clock source are stable, the $\overline{\text{POR}}$ pin ***must*** remain asserted (low) for a minimum of 12 MXI cycles.

   Within the low period of the $\overline{\text{POR}}$ pin, the following happens:
   - The reset signals flow to the entire chip (including the emulation logic), resetting the modules on chip.
   - The PLL Controller clocks start at the frequency of the MXI clock. The clocks are propagated throughout the chip to reset the chip synchronously. By default, both PLL1 and PLL2 are in reset and unlocked. The PLL Controllers default to PLL Bypass Mode.
   - The $\overline{\text{RESETOUT}}$ pin stays asserted (low), indicating the device is in reset.
4. The $\overline{\text{POR}}$ pin may now be deasserted (driven high).

   When the $\overline{\text{POR}}$ pin is deasserted (high), the configuration pin values are latched and the PLL Controllers changed their system clocks to their default divide-down values. Both PLL Controllers are still in PLL Bypass Mode. Other device initialization also begins.
5. After device initialization is complete, the PLL Controllers pause the system clocks for 10 cycles. At the end of these 10 cycles, the $\overline{\text{RESETOUT}}$ pin is deasserted (driven high).

   At this point:

- The I/O pins are controlled by the default peripherals (default peripherals are determined by PINMUX0 and PINMUX1 registers).
- The clock and reset of each peripheral is determined by the default settings of the Power and Sleep Controller (PSC).
- The PLL Controllers are operating in PLL Bypass Mode.
- The C64x+ begins executing from DSPBOOTADDR (determined by bootmode selection).

After the reset sequence, the boot sequence begins. For more details on the boot sequence, see the *Using the TMS320DM643x Bootloader* Application Report (literature number SPRAAG0).

After the boot sequence, follow the software initialization sequence described in Section 3.8, *Device Initialization Sequence After Reset*.

6.5.1.1 Usage of $\overline{\text{POR}}$ versus $\overline{\text{RESET}}$ Pins

$\overline{\text{POR}}$ and $\overline{\text{RESET}}$ are independent resets.

If the device needs to go through a power-up cycle, $\overline{\text{POR}}$ (*not* $\overline{\text{RESET}}$) ***must*** be used to fully reset the device.

In functional end-system, emulation/debugger logic is typically *not* needed; therefore, the recommendation for functional end-system is to use the $\overline{\text{POR}}$ pin for full device reset. If $\overline{\text{RESET}}$ pin is *not* needed, it can be pulled inactive (high) via an external pullup resistor.

In a debug system, it is typically desirable to allow the reset of the device without crashing an emulation session. In this case, the user can use the $\overline{\text{POR}}$ pin to achieve full device reset and use the $\overline{\text{RESET}}$ pin to achieve a debug reset—which resets the entire device except emulation logic.

6.5.1.2 Latching Boot and Configuration Pins

Internal to the chip, the two device reset pins $\overline{\text{RESET}}$ and $\overline{\text{POR}}$ are logically AND'd together *only* for the purpose of latching device boot and configuration pins. The values on all device and boot configuration pins are latched into the BOOTCFG register when the logical AND of $\overline{\text{RESET}}$ and $\overline{\text{POR}}$ transitions from low-to-high.

6.5.2 Warm Reset ($\overline{\text{RESET}}$ Pin)

A Warm Reset is activated by driving the $\overline{\text{RESET}}$ pin active low. This resets everything in the device except the emulation logic. An emulator session will stay alive during warm reset.

For more information on $\overline{\text{POR}}$ vs. $\overline{\text{RESET}}$ usage, see Section 6.5.1.1, *Usage of $\overline{\text{POR}}$ versus $\overline{\text{RESET}}$ Pins* and Section 6.5.1.2, *Latching Boot and Configuration Pins*.

The following sequence ***must*** be followed during a Warm Reset:

1. Power supplies and input clock source should already be stable.
2. The RESET pin ***must*** be asserted (low) for a minimum of 12 MXI cycles.

   Within the low period of the $\overline{\text{RESET}}$ pin, the following happens:
   - The reset signals flow to the entire chip resetting all the modules on chip, except the emulation logic.
   - The PLL Controllers are reset thereby, switching back to PLL Bypass Mode and resetting all their registers to default values. Both PLL1 and PLL2 are placed in reset and lose lock.
   - The $\overline{\text{RESETOUT}}$ pin becomes asserted (low), indicating the device is in reset.
3. The $\overline{\text{RESET}}$ pin may now be deasserted (driven high).

   When the $\overline{\text{RESET}}$ pin is deasserted (high), the configuration pin values are latched and the PLL Controllers changed their system clocks to their default divide-down values. Both PLL Controllers are still in PLL Bypass Mode. Other device initialization also begins.
4. After device initialization is complete, the PLL Controllers pause the system clocks for 10 cycles. At the end of these 10 cycles, the $\overline{\text{RESETOUT}}$ pin is deasserted (driven high).

At this point:
- The I/O pins are controlled by the default peripherals (default peripherals are determined by PINMUX0 and PINMUX1 registers).
- The clock and reset of each peripheral is determined by the default settings of the Power and Sleep Controller (PSC).
- The PLL Controllers are operating in PLL Bypass Mode.
- The C64x+ begins executing from DSPBOOTADDR (determined by bootmode selection).

After the reset sequence, the boot sequence begins. For more details on the boot sequence, see the *Using the TMS320DM643x Bootloader* Application Report (literature number SPRAAG0)).

After the boot sequence, follow the software initialization sequence described in Section 3.8, *Device Initialization Sequence After Reset*.

6.5.3 Maximum Reset

A Maximum (Max) Reset is initiated by the emulator or the watchdog timer (Timer 2). The effects are the same as a warm reset, except the device boot and configuration pins are not re-latched. The emulator initiates a maximum reset via the ICEPICK module. This ICEPICK initiated reset is non-maskable. When the watchdog timer counter reaches zero, this will also initiate a maximum reset to recover from a runaway condition. The watchdog timeout reset condition is masked if the TIMERCTL.WDRST bit is cleared to "0".

To invoke the maximum reset via the ICEPICK module, the user can perform the following from the Code Composer Studio™ IDE menu: Debug→Advanced Resets→System Reset

This is the Max Reset sequence:

1. Max Reset is initiated by the emulator or the watchdog timer.

   During this time, the following happens:
   - The reset signals flow to the entire chip resetting all the modules on chip except the emulation logic.
   - The PLL Controllers are reset thereby, switching back to PLL Bypass Mode and resetting all their registers to default values. Both PLL1 and PLL2 are placed in reset and lose lock.
   - The $\overline{\text{RESETOUT}}$ pin becomes asserted (low), indicating the device is in reset.
2. After device initialization is complete, the PLL Controllers pause the system clocks for 10 cycles. At the end of these 10 cycles, the $\overline{\text{RESETOUT}}$ pin is deasserted (driven high).

   At this point:
   - The I/O pins are controlled by the default peripherals (default peripherals are determined by PINMUX0 and PINMUX1 registers).
   - The clock and reset of each peripheral is determined by the default settings of the Power and Sleep Controller (PSC).
   - The PLL Controllers are operating in PLL Bypass Mode.
   - The C64x+ begins executing from DSPBOOTADDR (determined by bootmode selection).

After the reset sequence, the boot sequence begins. Since the boot and configuration pins are *not* latched with a Max Reset, the previous values (as shown in the BOOTCFG register) are used to select the boot mode. For more details on the boot sequence, see the *Using the TMS320DM643x Bootloader* Application Report (literature number SPRAAG0).

After the boot sequence, follow the software initialization sequence described in Section 3.8, *Device Initialization Sequence After Reset*.

6.5.4 CPU Local Reset

The C64x+ DSP CPU has an internal reset input that allows a host (HPI) to control it. This reset is configured through a register bit (MDCTL[39].$\overline{\text{LRST}}$) in the Power Sleep Controller (PSC) module. When in C64x+ local reset, the slave DMA port on C64x+ will remain active and the internal memory will be accessible. For procedures on asserting and de-asserting CPU local reset by the host, see the *TMS320DM643x DMP DSP Subsystem* Reference Guide (literature number SPRU978).

For information on peripheral selection at the rising edge of $\overline{\text{POR}}$ or $\overline{\text{RESET}}$, see Section 3, *Device Configurations* of this data manual.

6.5.5 Peripheral Local Reset

The user can configure the local reset and clock state of a peripheral through programming the PSC. Table 6-4, DM6435 LPSC Assignments identifies the LPSC numbers and the peripherals capable of being locally reset by the PSC. For more detailed information on the programming of these peripherals by the PSC, see the *TMS320DM643x DMP DSP Subsystem* Reference Guide (literature number SPRU978).

6.5.6 Reset Priority

If any of the above reset sources occur simultaneously, the PLLC only processes the highest priority reset request. The reset request priorities are as follows (high to low):

- Power-on Reset
- Maximum Reset
- Warm Reset
- CPU Reset

6.5.7 Reset Controller Register

The Reset Type Status (RSTYPE) register (01C4 00E4) is the only register for the reset controller. This register falls in the same memory range as the PLL1 controller registers (see Table 6-18 for the PLL1 Controller Registers (including Reset Controller)). For more details on the RSTYPE register, see the *TMS320DM643x DMP DSP Subsystem* Reference Guide (literature number SPRU978).

6.5.8 Pin Behaviors at Reset

During normal operations, pins are controlled by the respective peripheral selected in the PINMUX0 or PINMUX1 register. During device level global reset, the pin behaves as follows:

Multiplexed Boot and Configuration Pins

These pins are forced 3-stated when $\overline{\text{RESETOUT}}$ is asserted (low). This is to ensure the proper boot and configuration values can be latched on these multiplexed pins. This is particularly useful in the case where the boot and configuration values are driven by an external control device. After $\overline{\text{RESETOUT}}$ is deasserted (high), these pins are controlled by their respective default peripheral.

- **Boot and Configuration Pins Group:** GP[28], GP[27], GP[26]/(FASTBOOT), GP[25]/(BOOTMODE3), GP[24]/(BOOTMODE2), GP[23]/(BOOTMODE1), GP[22]/(BOOTMODE0), EM_A[4]/GP[10]/(AEAW2/PLLMS2), EM_A[1]/(ALE)/GP[9]/(AEAW1/PLLMS1), EM_A[2]/(CLE)/GP[8]/(AEAW0/PLLMS0), EM_A[0]/GP[7]/(AEM2), EM_BA[0]/GP[6]/(AEM1), and EM_BA[1]/GP[5]/(AEM0).

For information on whether external pullup/pulldown resistors should be used on the boot and configuration pins, see Section 3.9.1, *Pullup/Pulldown Resistors*.

Default Power Down Pins

As discussed in Section 3.2, *Power Considerations*, the VDD3P3V_PWDN register controls power to the 3.3-V pins. The VDD3P3V_PWDN register defaults to powering down some 3.3-V pins to save power. For more details on the VDD3P3V_PWDN register and which 3.3-V pins default to powerup or powerdown, Section 3.2, *Power Considerations*. The pins that default to powerdown, are both reset to powerdown and high-impedance. They remain in that state until configured otherwise by VDD3P3_PWDN and PINMUX0/PINMUX1 programming.

- **Default Power Down Pin Group:** GP[4]/PWM1, ACLKR0/CLKX0/GP[99], AFSR0/DR0/GP[100], AHCLKR0/CLKR0/GP[101], AXR0[3]/FSR0/GP[102], AXR0[2]/FSX0/GP[103], AXR0[1]/DX0/GP[104], AXR0/GP[105], ACLKX0/GP[106], AFSX0/GP[107], AHCLKX0/GP[108], AMUTEIN0/GP[109], AMUTE0/GP[110], HECC_TX/TOUT1L/UTXD1/GP[55], HECC_RX/TINP1L/URXD1/GP[56], CLKS0/TOUT0L/GP[97], TINP0L/GP[98], URXD0/GP[85], UTXD0/GP[86], UCTS0/GP[87], and URTS0/PWM0/GP[88].

All Other Pins

During $\overline{\text{RESETOUT}}$ assertion (low), all other pins are controlled by the default peripheral. The default peripheral is determined by the default settings of the PINMUX0 or PINMUX1 registers.

Some of the PINMUX0/PINMUX1 settings are determined by configuration pins latched at reset. To determine the reset behavior of these pins, see Section 3.7, *Multiplexed Pin Configurations* and read the rest of the this subsection to understand how that default peripheral controls the pin.

The reset behaviors for all these other pins are categorized as follows (also see Figure 6-7 and Figure 6-8 in Section 6.5.9, *Reset Electrical Data/Timing*):

- **Z+/Low Group (Z Longer-to-Low Group):** These pins are 3-stated when device-level global reset source (e.g., $\overline{\text{POR}}$, $\overline{\text{RESET}}$, or Max Reset) is asserted. These pins remain 3-stated throughout $\overline{\text{RESETOUT}}$ assertion. When $\overline{\text{RESETOUT}}$ is deasserted, these pins drive a logic low.
- **Z+/High Group (Z Longer-to-High Group):** These pins are 3-stated when device-level global reset source (e.g., $\overline{\text{POR}}$, $\overline{\text{RESET}}$, or Max Reset) is asserted. These pins remain 3-stated throughout $\overline{\text{RESETOUT}}$ assertion. When $\overline{\text{RESETOUT}}$ is deasserted, these pins drive a logic high.
- **Z+/Invalid Group (Z Longer-to-Invalid Group):** These pins are 3-stated when device-level global reset source (e.g., $\overline{\text{POR}}$, $\overline{\text{RESET}}$, or Max Reset) is asserted. These pins remain 3-stated throughout $\overline{\text{RESETOUT}}$ assertion. When $\overline{\text{RESETOUT}}$ is deasserted, these pins drive an invalid value until configured otherwise by their respective peripheral (after the peripheral is enabled by the PSC).
- **Z Group:** These pins are 3-stated by default, and these pins remain 3-stated throughout $\overline{\text{RESETOUT}}$ assertion. When $\overline{\text{RESETOUT}}$ is deasserted, these pins remain 3-stated until configured otherwise by their respective peripheral (after the peripheral is enabled by the PSC).
- **Low Group:** These pins are low by default, and remain low until configured otherwise by their respective peripheral (after the peripheral is enabled by the PSC).
- **High Group:** These pins are high by default, and remain high until configured otherwise by their respective peripheral (after the peripheral is enabled by the PSC).
- **Z/Low Group (Z-to-Low Group):** These pins are 3-stated when device-level global reset source (e.g., $\overline{\text{POR}}$, $\overline{\text{RESET}}$, or Max Reset) is asserted. When the reset source is deasserted, these pins drive a logic low.
- **Z/High Group (Z-to-High Group):** These pins are 3-stated when device-level global reset source (e.g., $\overline{\text{POR}}$, $\overline{\text{RESET}}$, or Max Reset) is asserted. When reset source is deasserted, these pins drive a logic high.
- **Clock Group:** These clock pins are toggling by default. They paused momentarily before $\overline{\text{RESETOUT}}$ is deasserted (high). The *only* pin in the Clock Group is CLKOUT0.

This is a list of possible default peripherals and how they control the pins during reset:

- **GPIO:** All GPIO pins behave according to Z Group.

  Note: The following EMIFA list *only* includes pins that can default to function as EMIFA signals.

- **EMIFA:** These EMIFA signals are multiplexed with boot and configuration pins: EM_A[4], EM_A[2:0], EM_BA[0], EM_BA[1]; therefore, they are forced 3-stated throughout $\overline{\text{RESETOUT}}$.
  - **Z+/Low Group:** EM_A[4], EM_A[2:0]
  - **Z+/High Group:** EM_BA[0], EM_BA[1], $\overline{\text{EM\_OE}}$, $\overline{\text{EM\_WE}}$
  - **Z+/Invalid Group:** EM_D[7:0]
  - **Z/Low Group:** EM_A[21:5], EM_A[3], EM_R/$\overline{\text{W}}$
  - **Z/High Group:** $\overline{\text{EM\_CS2}}$
  - **Z Group:** EM_WAIT/(RDY/$\overline{\text{BSY}}$)
- **DDR2 Memory Controller:**
  - **Clock Group:** DDR_CLK, $\overline{\text{DDR\_CLK}}$
  - **DDR2 Z Group:** DDR_DQM[3:0], DDR_DQS[3:0], DDR_D[31:0]
  - **DDR2 Low Group:** DDR_CKE, DDR_BA[2:0], DDR_A[12:0]
  - **DDR2 High Group:** $\overline{\text{DDR\_CS}}$, $\overline{\text{DDR\_WE}}$, $\overline{\text{DDR\_RAS}}$, $\overline{\text{DDR\_CAS}}$
- **I2C:** All I2C pins behave according to Z Group.
- **JTAG:** TDO, EMU0, and EMU1 pins behave according to Z Group. TCK, TDI, TMS, and $\overline{\text{TRST}}$ are input-only pins.
- **Clock:** CLKOUT0

For more information on the pin behaviors during device-level global reset, see Figure 6-7 and Figure 6-8 in Section 6.5.9, *Reset Electrical Data/Timing*.

6.5.9 Reset Electrical Data/Timing

Note: If a configuration pin ***must*** be routed out from the device, the internal pullup/pulldown (IPU/IPD) resistor should ***not*** be relied upon; TI recommends the use of an external pullup/pulldown resistor.

Table 6-11. Timing Requirements for Reset (see Figure 6-7 and Figure 6-8)

NO.			-7/-6/-5/-4 -L/-Q6/-Q5/-Q4		UNIT
			MIN	MAX	
1	$t_{w(RESET)}$	Pulse duration, $\overline{\text{POR}}$ low or $\overline{\text{RESET}}$ low	12C (1)		ns
4	$t_{su(CONFIG)}$	Setup time, boot and configuration pins valid before $\overline{\text{POR}}$ high or $\overline{\text{RESET}}$ high (2)	12C (1)		ns
5	$t_{h(CONFIG)}$	Hold time, boot and configuration pins valid after $\overline{\text{POR}}$ high or $\overline{\text{RESET}}$ high (2)	0		ns

(1) C = 1/MXI clock frequency in ns. The device clock source ***must*** be stable and at a valid frequency prior to meeting the $t_{w(RESET)}$ requirement.
(2) For the list of boot and configuration pins, see Table 2-5, *Boot Terminal Functions*.

Table 6-12. Switching Characteristics Over Recommended Operating Conditions During Reset (1) (see Figure 6-8)

NO.	PARAMETER		-7/-6/-5/-4 -L/-Q6/-Q5/-Q4		UNIT
			MIN	MAX	
2	$t_{d(RSTH-RSTOUTH)}$	Delay time, $\overline{\text{POR}}$ high or $\overline{\text{RESET}}$ high to $\overline{\text{RESETOUT}}$ high		1900C	ns
3	$t_{w(PAUSE)}$	Pulse duration, SYSCLKs paused (low) before $\overline{\text{RESETOUT}}$ high	10C	10C	ns
6	$t_{d(RSTL-IV)}$	Delay time, $\overline{\text{POR}}$ low or $\overline{\text{RESET}}$ low to pins invalid		20	ns
7	$t_{d(RSTH-V)}$	Delay time, $\overline{\text{POR}}$ high or $\overline{\text{RESET}}$ high to pins valid		20	ns
8	$t_{d(RSTOUTH-V)}$	Delay time, $\overline{\text{RESETOUT}}$ high to pins valid		0	ns
9	$t_{d(RSTOUTH-IV)}$	Delay time, $\overline{\text{RESETOUT}}$ high to pins invalid		12C	ns

(1) C = 1/CLKIN1 clock frequency in ns.

Figure 6-7 shows the Power-Up Timing. Figure 6-8 shows the Warm Reset ($\overline{\text{RESET}}$) Timing. Max Reset Timing is identical to Warm Reset Timing, except the boot and configuration pins are ***not*** relatched *and* the BOOTCFG register retains its previous value latched before the Max Reset was initiated.

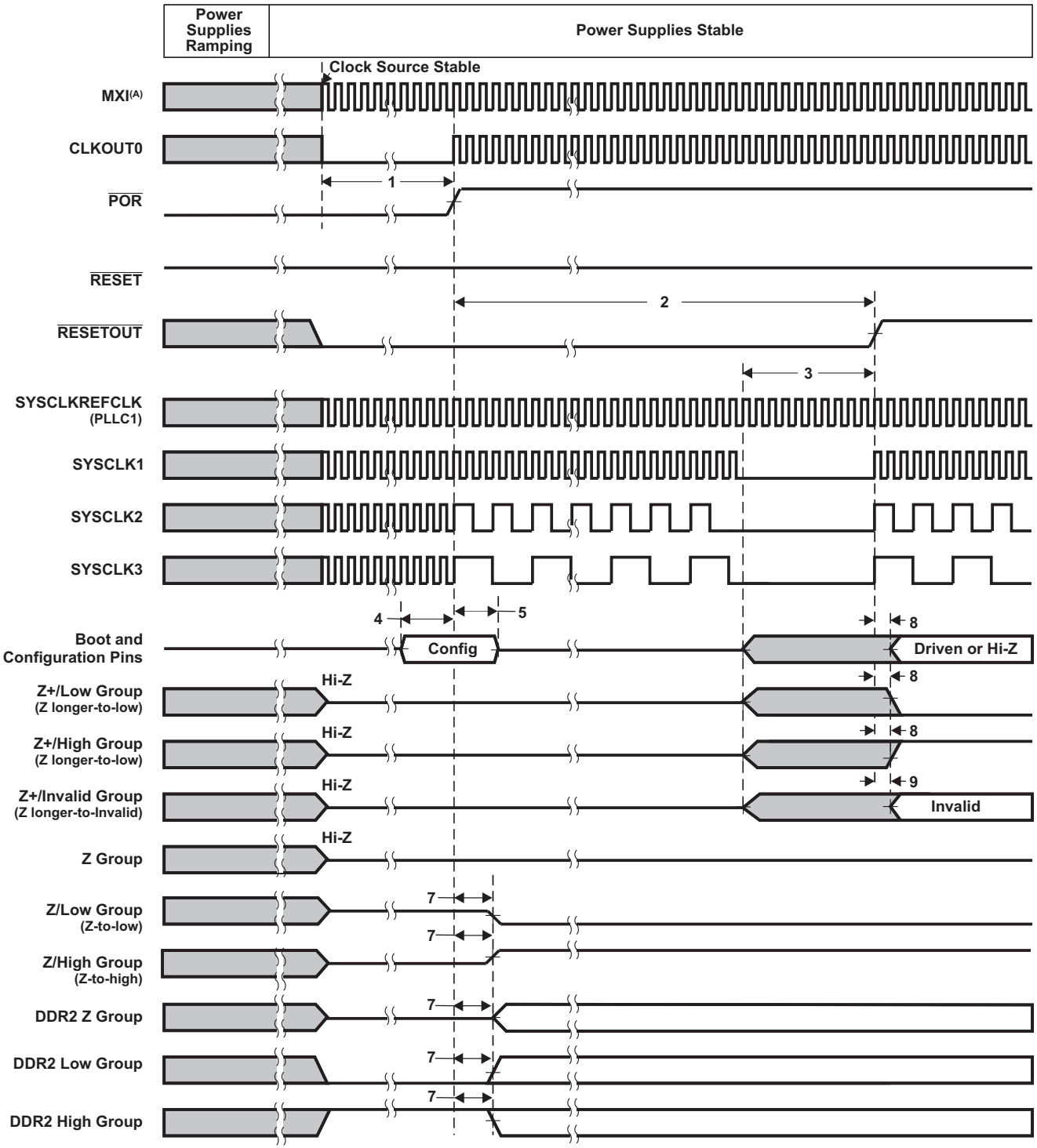

A. Power supplies and MXI must be stable before the start of $t_{W(RESET)}$.

B. Pin reset behavior depends on which peripheral defaults to controlling the multiplexed pin. For more details on what pin group (e.g., Z Group, Z/Low Group, Z/High Group, etc.) each pin belongs to, see Section 6.5.8, *Pin Behaviors at Reset*.

Figure 6-7. Power-Up Timing[B]

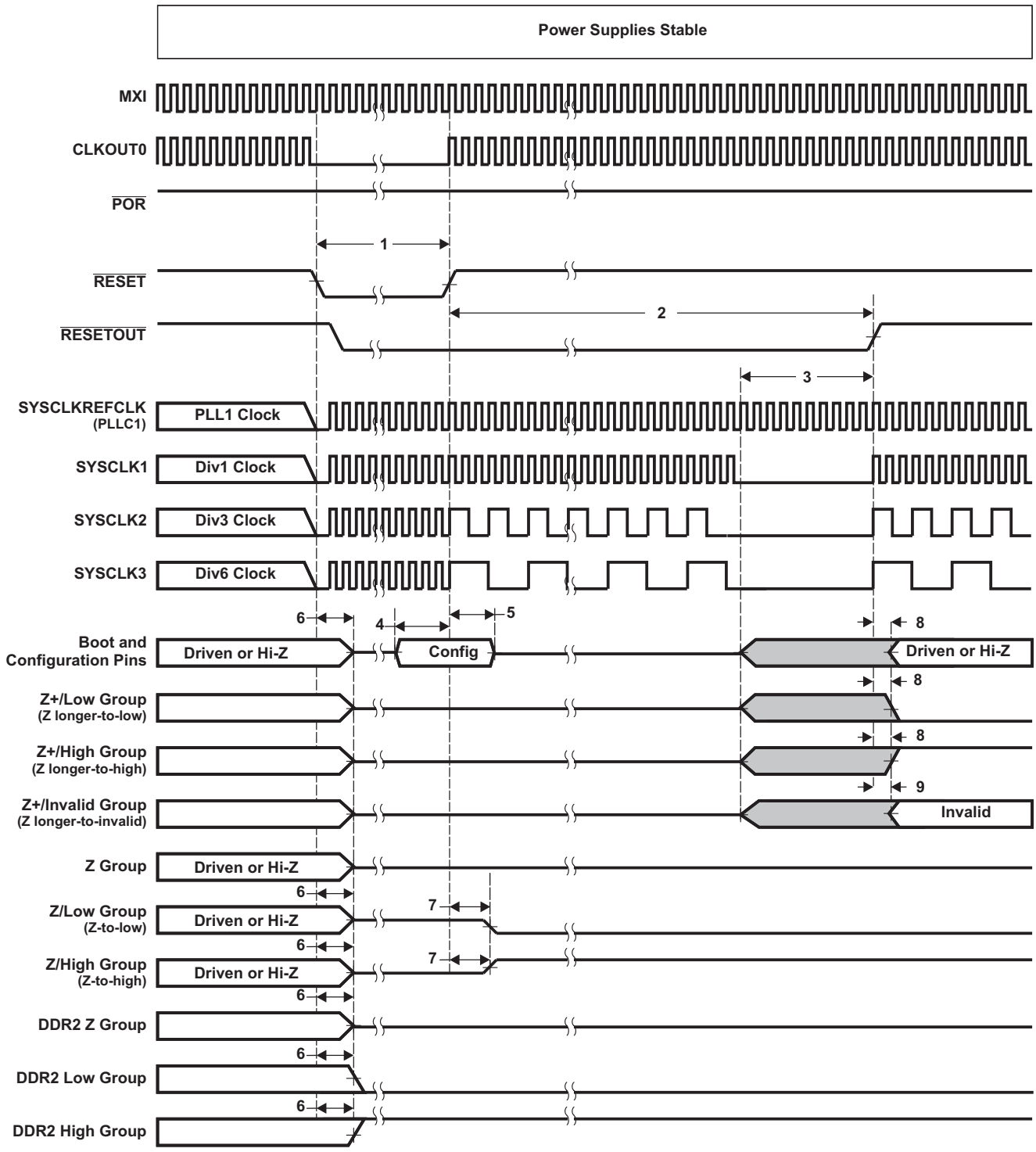

A. Pin reset behavior depends on which peripheral defaults to controlling the multiplexed pin. For more details on what pin group (e.g., Z Group, Z/Low Group, Z/High Group, etc.) each pin belongs to, see Section 6.5.8, *Pin Behaviors at Reset*.

Figure 6-8. Warm Reset ($\overline{\text{RESET}}$) Timing[(A)]

6.6 External Clock Input From MXI/CLKIN Pin

The DM6435 device includes two options to provide an external clock input:

- Use an on-chip oscillator with external crystal.
- Use an external 1.8-V LVCMOS-compatible clock input.

The optimal external clock input frequency is 27 MHz. Section 6.6.1 provides more details on Option 1, using an on-chip oscillator with external crystal. Section 6.6.2 provides details on Option 2, using an external 1.8-V LVCMOS-compatible clock input.

6.6.1 Clock Input Option 1—Crystal

In this option, a crystal is used as the external clock input to the DM6435.

The 27-MHz oscillator provides the reference clock for all DM6435 subsystems and peripherals. The on-chip oscillator requires an external 27-MHz crystal connected across the MXI and MXO pins, along with two load capacitors, as shown in Figure 6-9. The external crystal load capacitors ***must*** be connected only to the 27-MHz oscillator ground pin (MXV_{SS}). ***Do not*** connect to board ground (V_{SS}). The MXV_{DD} pin can be connected to the same 1.8 V power supply as DV_{DDR2}.

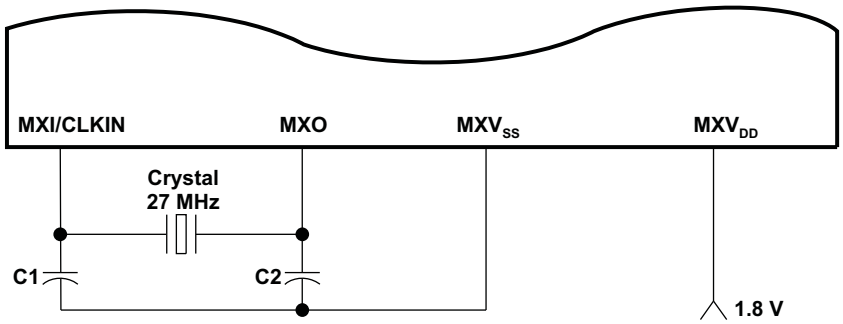

Figure 6-9. 27-MHz System Oscillator

The load capacitors, C1 and C2, should be chosen such that the equation is satisfied (typical values are C1 = C2 = 10 pF). C_L in the equation is the load specified by the crystal manufacturer. All discrete components used to implement the oscillator circuit should be placed as close as possible to the associated oscillator pins (MXI and MXO) and to the MXV_{SS} pin.

$$C_L = \frac{C_1 C_2}{(C_1 + C_2)}$$

Table 6-13. Input Requirements for Crystal

PARAMETER		MIN	TYP	MAX	UNIT
	Start-up time (from power up until oscillating at stable frequency of 27 MHz)			4	ms
	Oscillaton frequency		27		MHz
	ESR			60	Ω
	Frequency Stability(1)			±50	ppm

(1) For video and audio applications, stability of the input clock is *very* important. The user should select crystals with low enough ppm to ensure good video and audio quality for the specific application.

6.6.2 Clock Input Option 2—1.8-V LVCMOS-Compatible Clock Input

In this option, a 1.8-V LVCMOS-Compatible Clock Input is used as the external clock input to the DM6435. The external connections are shown in Figure 6-10. The MXI/CLKIN pin is connected to the 1.8-V LVCMOS-Compatible clock source. The MXO pin is left unconnected. The MXV_{SS} pin is connected to board ground (V_{SS}). The MXV_{DD} pin can be connected to the same 1.8-V power supply as DV_{DDR2}.

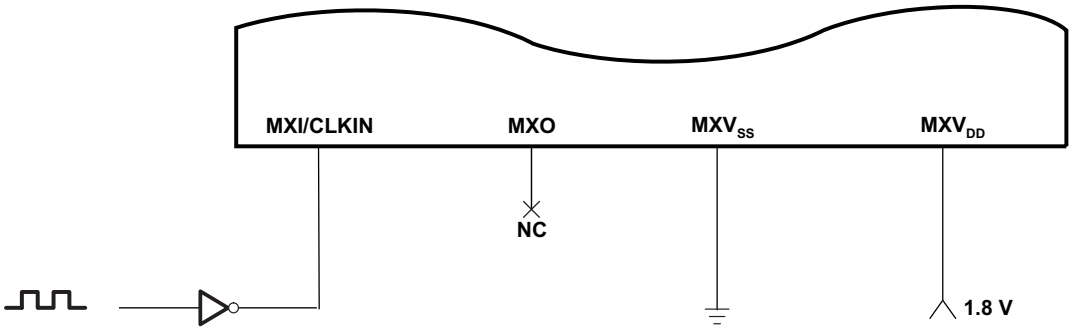

Figure 6-10. 1.8-V LVCMOS-Compatible Clock Input

The clock source ***must*** meet the MXI/CLKIN timing requirements in Section 6.7.4, *Clock PLL Electrical Data/Timing (Input and Output Clocks)*.

6.7 Clock PLLs

There are two independently controlled PLLs on DM6435. PLL1 generates the frequencies required for the DSP, DMA, VPFE, and other peripherals. PLL2 generates the frequencies required for the DDR2 interface. The recommended reference clock for both PLLs is the 27-MHz crystal input.

6.7.1 PLL1 and PLL2

Both PLL1 and PLL2 power is supplied externally via the 1.8 V PLL power-supply pin (PLL_{PWR18}). An external EMI filter circuit ***must*** be added to PLL_{PWR18}, as shown in Figure 6-11. The 1.8-V supply of the EMI filter must be from the same 1.8-V power plane supplying the device's 1.8-V I/O power-supply pins (DV_{DDDR2}). TI recommends EMI filter manufacturer Murata, part number NFM18CC222R1C3.

All PLL external components (C1, C2, and the EMI Filter) ***must*** be placed as close to the device as possible. For the best performance, TI recommends that all the PLL external components be on a single side of the board without jumpers, switches, or components other than the ones shown in Figure 6-11. For reduced PLL jitter, maximize the spacing between switching signals and the PLL external components (C1, C2, and the EMI Filter).

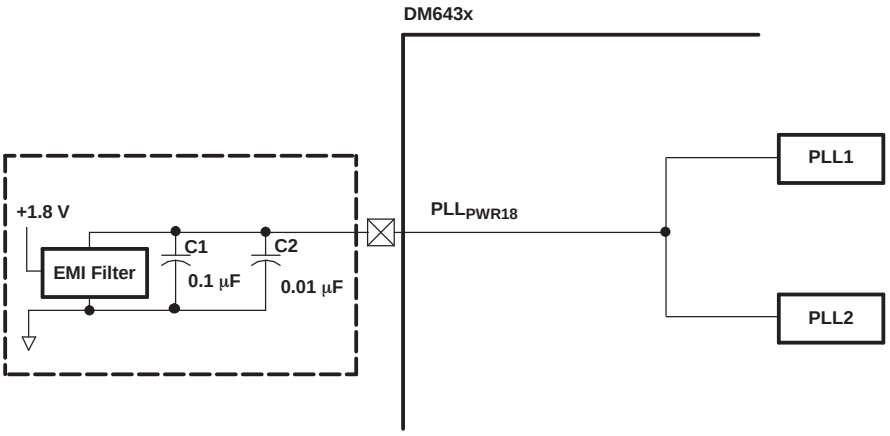

Figure 6-11. PLL1 and PLL2 External Connection

The minimum CLKIN rise and fall times should also be observed. For the input clock timing requirements, see Section 6.7.4, *Clock PLL Electrical Data/Timing (Input and Output Clocks)*.

There is an allowable range for PLL multiplier (PLLM). There is a minimum and maximum operating frequency for MXI/CLKIN, PLLOUT, and the device clocks (SYSCLKs). The PLL Controllers ***must*** be configured not to exceed any of these constraints documented in this section (certain combinations of external clock inputs, internal dividers, and PLL multiply ratios might not be supported). For these constraints (ranges), see Table 6-14 through Table 6-16.

Table 6-14. PLL1 and PLL2 Multiplier Ranges

PLL MULTIPLIER (PLLM)	MIN	MAX
PLL1 Multiplier	x14	x30
PLL2 Multiplier	x14	x32

Table 6-15. PLLC1 Clock Frequency Ranges

CLOCK SIGNAL NAME		MIN	MAX	UNIT
MXI/CLKIN[1]		20	30	MHz
PLLOUT CV_{DD} = 1.2 V	-7 devices	300	700	MHz
	-6/-5/-4/-L/-Q6/-Q5/-Q4 devices	300	600	MHz
PLLOUT CV_{DD} = 1.05 V	-7 devices	300	520	MHz
	-6/-5/-4/-L/-Q5 devices	300	520	MHz
SYSCLK1[2] (CLKDIV1 Domain) CV_{DD} = 1.2 V	-7 devices		700	MHz
	-Q6 devices		660	MHz
	-6/-L devices		600	MHz
	-5/-Q5 devices		500	MHz
	-4/-Q4 devices		400	MHz
SYSCLK1[2] (CLKDIV1 Domain), CV_{DD} = 1.05 V	-7 devices		520	MHz
	-6/-L devices		450	MHz
	-5/-Q5 devices		400	MHz
	-4 devices		350	MHz

(1) MXI/CLKIN input clock is used for both PLL Controllers (PLLC1 and PLLC2).
(2) Applies to "tape and reel" part number counterparts as well. For more information, see Section 2.8, *Device and Development-Support Tool Nomenclature*.

Table 6-16. PLLC2 Clock Frequency Ranges

CLOCK SIGNAL NAME		MIN	MAX	UNIT
MXI/CLKIN[1]		20	30	MHz
PLLOUT	At 1.2-V CV_{DD}	300	900	MHz
	At 1.05-V CV_{DD}	300	666	MHz
PLL2_SYSCLK1 (to DDR2 PHY)			333	MHz

(1) MXI/CLKIN input clock is used for both PLL Controllers (PLLC1 and PLLC2).

Both PLL1 and PLL2 have stabilization, lock, and reset timing requirements that ***must*** be followed.

The PLL stabilization time is the amount of time that ***must*** be allotted for the internal PLL regulators to become stable after the PLL is powered up (after PLLCTL.PLLPWRDN bit goes through a 1-to-0 transition). The PLL should *not* be operated until this stabilization time has expired. This stabilization step ***must*** be applied after these resets—a Power-on Reset, a Warm Reset, or a Max Reset, as the PLLCTL.PLLPWRDN bit resets to a "1". For the PLL stabliziation time value, see Table 6-17.

The PLL reset time is the amount of wait time needed for the PLL to properly reset (writing PLLRST = 0) before bringing the PLL out of reset (writing PLLRST = 1). For the PLL reset time value, see Table 6-17.

The PLL lock time is the amount of time needed from when the PLL is taken out of reset (PLLRST = 1 with PLLEN = 0) to when to when the PLL controller can be switched to PLL mode (PLLEN = 1). For the PLL lock time value, see Table 6-17.

Table 6-17. PLL1 and PLL2 Stabilization, Lock, and Reset Times

PLL STABILIZATION/LOCK/RESET TIME	MIN	TYP	MAX	UNIT
PLL Stabilization Time	150			µs
PLL Lock Time			2000C[1]	ns
PLL Reset Time	128C[1]			ns

(1) C = CLKIN cycle time in ns. For example, when MXI/CLKIN frequency is 27 MHz, use C = $37.\overline{037}$ ns.

For details on the PLL initialization software sequence, see the*TMS320DM643x DMP DSP Subsystem* Reference Guide (literature number SPRU978).

For more information on the clock domains and their clock ratio restrictions, see Section 6.3.4, *DM6435 Power and Clock Domains*.

6.7.2 PLL Controller Register Description(s)

A summary of the PLL controller registers is shown in Table 6-18. For more details, see the *TMS320DM643x DMP DSP Subsystem* Reference Guide (literature number SPRU978).

Table 6-18. PLL and Reset Controller Registers Memory Map

HEX ADDRESS RANGE	REGISTER ACRONYM	DESCRIPTION
Controller Registers		
0x01C4 0800	PID	Peripheral ID Register
0x01C4 08E4	RSTYPE	Reset Type Register
0x01C4 0900	PLLCTL	PLL Controller 1 PLL Control Register
0x01C4 0910	PLLM	PLL Controller 1 PLL Multiplier Control Register
0x01C4 0918	PLLDIV1	PLL Controller 1 Divider 1 Register (SYSCLK1)
0x01C4 091C	PLLDIV2	PLL Controller 1 Divider 2 Register (SYSCLK2)
0x01C4 0920	PLLDIV3	PLL Controller 1 Divider 3 Register (SYSCLK3)
0x01C4 0924	OSCDIV1	PLL Controller 1 Oscillator Divider 1 Register (OBSCLK) [CLKOUT0 pin]
0x01C4 0928	–	Reserved
0x01C4 092C	–	Reserved
0x01C4 0938	PLLCMD	PLL Controller 1 Command Register
0x01C4 093C	PLLSTAT	PLL Controller 1 Status Register (Shows PLLC1 Status)
0x01C4 0940	ALNCTL	PLL Controller 1 Clock Align Control Register (Indicates Which SYSCLKs Need to be Aligned for Proper Device Operation)
0x01C4 0944	DCHANGE	PLL Controller 1 PLLDIV Divider Ratio Change Status Register (Indicates if SYSCLK Divide Ratio has Been Modified)
0x01C4 0948	CKEN	PLL Controller 1 Clock Enable Control Register
0x01C4 094C	CKSTAT	PLL Controller 1 Clock Status Register (For All Clocks Except SYSCLKx)
0x01C4 0950	SYSTAT	PLL Controller 1 SYSCLK Status Register (Indicates SYSCLK on/off Status)
0x01C4 0960	–	Reserved
0x01C4 0964	–	Reserved
PLL2 Controller Registers		
0x01C4 0C00	PID	Peripheral ID Register
0x01C4 0D00	PLLCTL	PLL Controller 2 PLL Control Register
0x01C4 0D10	PLLM	PLL Controller 2 PLL Multiplier Control Register
0x01C4 0D18	PLLDIV1	PLL Controller 2 Divider 1 Register (SYSCLK1)
0x01C4 0D1C	–	Reserved
0x01C4 0D20 - 0x01C4 0D2C	–	Reserved
0x01C4 0D2C	BPDIV	PLL Controller 2 Bypass Divider Register (SYSCLKBP)
0x01C4 0D38	PLLCMD	PLL Controller 2 Command Register
0x01C4 0D3C	PLLSTAT	PLL Controller 2 Status Register (Shows PLLC2 Status)
0x01C4 0D40	ALNCTL	PLL Controller 2 Clock Align Control Register (Indicates Which SYSCLKs Need to be Aligned for Proper Device Operation)
0x01C4 0D44	DCHANGE	PLL Controller 2 PLLDIV Divider Ratio Change Status Register (Indicates if SYSCLK Divide Ratio has Been Modified)
0x01C4 0D48	–	Reserved
0x01C4 0D4C	CKSTAT	PLL Controller 2 Clock Status Register (For All Clocks Except SYSCLKx)
0x01C4 0D50	SYSTAT	PLL Controller 2 SYSCLK Status Register (Indicates SYSCLK on/off Status)

Table 6-18. PLL and Reset Controller Registers Memory Map (continued)

HEX ADDRESS RANGE	REGISTER ACRONYM	DESCRIPTION
0x01C4 0D54 - 0x01C4 0FFF	–	Reserved

6.7.3 Clock PLL Considerations with External Clock Sources

If the internal oscillator is bypassed, to minimize the clock jitter a single clean power supply should power both the DM6435 device and the external clock oscillator circuit. The minimum CLKIN rise and fall times should also be observed. For the input clock timing requirements, see Section 6.7.4, *Clock PLL Electrical Data/Timing (Input and Output Clocks)*.

Rise/fall times, duty cycles (high/low pulse durations), and the load capacitance of the external clock source must meet the device requirements in this data manual (see Section 5.3, *Electrical Characteristics Over Recommended Ranges of Supply Voltage and Operating Temperature* and Section 6.7.4, *Clock PLL Electrical Data/Timing (Input and Output Clocks)*.

6.7.4 Clock PLL Electrical Data/Timing (Input and Output Clocks)

Table 6-19. Timing Requirements for MXI/CLKIN (1)(2)(3)(4) (see Figure 6-12)

NO.			-7/-6/-5/-4 -L/-Q6/-Q5/-Q4		UNIT
			MIN	MAX	
1	$t_{c(MXI)}$	Cycle time, MXI/CLKIN	$33.\overline{3}$	50	ns
2	$t_{w(MXIH)}$	Pulse duration, MXI/CLKIN high	0.45C	0.55C	ns
3	$t_{w(MXIL)}$	Pulse duration, MXI/CLKIN low	0.45C	0.55C	ns
4	$t_{t(MXI)}$	Transition time, MXI/CLKIN		0.05C	ns
5	$t_{J(MXI)}$	Period jitter, MXI/CLKIN		0.02C	ns
		Frequency Stability		±50	ppm

(1) The MXI/CLKIN frequency and PLL multiply factor should be chosen such that the resulting clock frequency is within the specific range for CPU operating frequency. For example, for a -6 speed device with a 27 MHz CLKIN frequency, the PLL multiply factor should be ≤ 22.
(2) The reference points for the rise and fall transitions are measured at V_{IL} MAX and V_{IH} MIN.
(3) For more details on the PLL multiplier factors, see the *TMS320DM63x DMP DSP Subsystem* Reference Guide (literature number SPRU978).
(4) C = CLKIN cycle time in ns. For example, when MXI/CLKIN frequency is 27 MHz, use C = $37.\overline{037}$ ns.

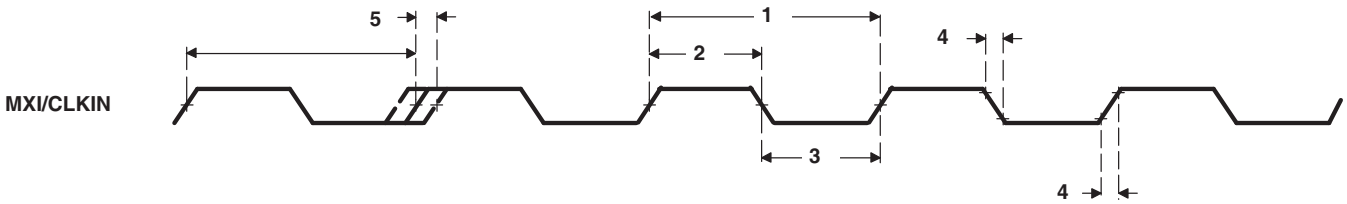

Figure 6-12. MXI/CLKIN Timing

Table 6-20. Switching Characteristics Over Recommended Operating Conditions for CLKOUT0 (1)(2) (see Figure 6-13)

NO.	PARAMETER		-7/-6/-5/-4 -L/-Q6/-Q5/-Q4		UNIT
			MIN	MAX	
1	t_C	Cycle time, CLKOUT0	33.3	50	ns
2	$t_{w(CLKOUT0H)}$	Pulse duration, CLKOUT0 high	0.45P	0.55P	ns
3	$t_{w(CLKOUT0L)}$	Pulse duration, CLKOUT0 low	0.45P	0.55P	ns
4	$t_{t(CLKOUT0)}$	Transition time, CLKOUT0		0.05P	ns

(1) The reference points for the rise and fall transitions are measured at V_{OL} MAX and V_{OH} MIN.
(2) P = 1/CLKOUT0 clock frequency in nanoseconds (ns). For example, when CLKOUT0 frequency is 27 MHz, use P = 37.04 ns.

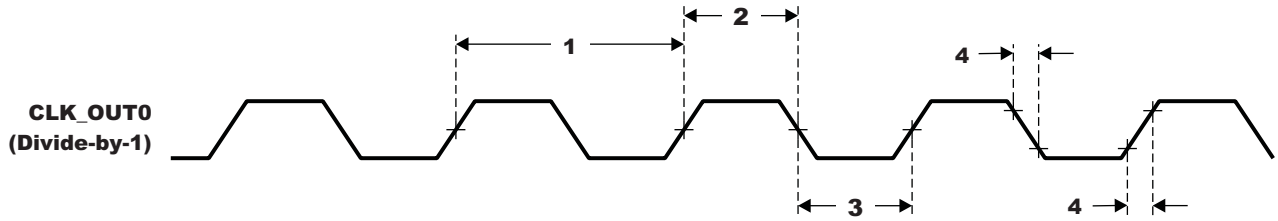

Figure 6-13. CLKOUT0 Timing

6.8 Interrupts

The C64x+ DSP interrupt controller combines device events into 12 prioritized interrupts. The source for each of the 12 CPU interrupts is user programmable and is listed in Table 6-21. Also, the interrupt controller controls the generation of the CPU exception and emulation interrupts. The NMI input to the C64x+ DSP interrupt controller is not connected internally; therefore, the NMI interrupt is not available. Table 6-22 summarizes the C64x+ interrupt controller registers and memory locations. For more details on DSP interrupt controller, see the *TMS320DM643x DMP DSP Subsystem* Reference Guide (literature number SPRU978).

Table 6-21. DM6435 DSP System Event Mapping

DSP SYSTEM EVENT NUMBER	ACRONYM	SOURCE	DSP INTERRUPT NUMBER	ACRONYM	SOURCE
0	EVT0	C64x+ Int Ctl 0	64	GPIO0	GPIO
1	EVT1	C64x+ Int Ctl 1	65	GPIO1	GPIO
2	EVT2	C64x+ Int Ctl 2	66	GPIO2	GPIO
3	EVT3	C64x+ Int Ctl 3	67	GPIO3	GPIO
4	TINTL0	Timer 0 – TINT12	68	GPIO4	GPIO
5	TINTH0	Timer 0 – TINT34	69	GPIO5	GPIO
6	TINTL1	Timer 1 – TINT12	70	GPIO6	GPIO
7	TINTH1	Timer 1 – TINT34	71	GPIO7	GPIO
8	WDINT	Timer 2 – TINT12	72	GPIOBNK0	GPIO
9	EMU_DTDMA	C64x+ EMC	73	GPIOBNK1	GPIO
10		Reserved	74	GPIOBNK2	GPIO
11	EMU_RTDXRX	C64x+ RTDX	75	GPIOBNK3	GPIO
12	EMU_RTDXTX	C64x+ RTDX	76	GPIOBNK4	GPIO
13	IDMAINT0	C64x+ EMC 0	77	GPIOBNK5	GPIO
14	IDMAINT1	C64x+ EMC 1	78	GPIOBNK6	GPIO
15		Reserved	79		Reserved
16		Reserved	80	PWM0	PWM0
17		Reserved	81	PWM1	PWM1
18		Reserved	82	PWM2	PWM2
19		Reserved	83	IICINT0	I2C
20		Reserved	84	UARTINT0	UART0
21		Reserved	85	UARTINT1	UART1
22		Reserved	86		Reserved
23		Reserved	87		Reserved
24	VDINT0	VPSS – CCDC 0	88		Reserved
25	VDINT1	VPSS – CCDC 1	89		Reserved
26	VDINT2	VPSS – CCDC 2	90		Reserved
27	HISTINT	VPSS – Histogram	91		Reserved
28	H3AINT	VPSS – AE/AWB/AF	92		Reserved
29	PRVUINT	VPSS – Previewer	93		Reserved
30	RSZINT	VPSS – Resizer	94		Reserved
31		Reserved	95		Reserved
32		Reserved	96	INTERR	C64x+ Interrupt Controller Dropped CPU Interrupt Event
33		Reserved	97	EMC_IDMAERR	C64x+ EMC Invalid IDMA Parameters
34	EDMA3CC_INTG	EDMACC Global Interupt	98		Reserved
35	EDMA3CC_INT0	EDMACC Interrupt Region 0	99		Reserved
36	EDMA3CC_INT1	EDMACC Interrupt Region 1	100		Reserved
37	EDMA3CC_ERRINT	EDMA CC Error	101		Reserved
38	EDMA3TC_ERRINT0	EDMA TC0 Error	102		Reserved
39	EDMA3TC_ERRINT1	EDMA TC1 Error	103		Reserved
40	EDMA3TC_ERRINT2	EDMA TC2 Error	104		Reserved
41	PSCINT	PSC ALLINT	105		Reserved
42		Reserved	106		Reserved

Table 6-21. DM6435 DSP System Event Mapping (continued)

DSP SYSTEM EVENT NUMBER	ACRONYM	SOURCE	DSP INTERRUPT NUMBER	ACRONYM	SOURCE
43	EMACINT	EMAC Memory Controller	107		Reserved
44		Reserved	108		Reserved
45		Reserved	109		Reserved
46		Reserved	110		Reserved
47	HPIINT	HPI	111		Reserved
48	MBXINT0	McBSP0 Transmit	112		Reserved
49	MBRINT0	McBSP0 Receive	113	PMC_ED	C64x+ PMC
50		Reserved	114		Reserved
51		Reserved	115		Reserved
52		Reserved	116	UMCED1	C64x+ UMC 1
53	DDRINT	DDR2 Memory Controller	117	UMCED2	C64x+ UMC 2
54	EMIFAINT	EMIFA	118	PDCINT	C64x+ PDC
55	VLQINT	VLYNQ	119	SYSCMPA	C64x+ SYS
56		Reserved	120	PMCCMPA	C64x+ PMC
57	HECC0INT	HECC Interrupt 0	121	PMCDMPA	C64x+ PMC
58	HECC1INT	HECC Interrupt 1	122	DMCCMPA	C64x+ DMC
59	AXINT0	McASP0 Transmit	123	DMCDMPA	C64x+ DMC
60	ARINT0	McASP0 Receive	124	UMCCMPA	C64x+ UMC
61		Reserved	125	UMCDMPA	C64x+ UMC
62		Reserved	126	EMCCMPA	C64x+ EMC
63		Reserved	127	EMCBUSERR	C64x+ EMC

Table 6-22. C64x+ Interrupt Controller Registers

HEX ADDRESS	ACRONYM	REGISTER DESCRIPTION
0x0180 0000	EVTFLAG0	Event flag register 0
0x0180 0004	EVTFLAG1	Event flag register 1
0x0180 0008	EVTFLAG2	Event flag register 2
0x0180 000C	EVTFLAG3	Event flag register 3
0x0180 0020	EVTSET0	Event set register 0
0x0180 0024	EVTSET1	Event set register 1
0x0180 0028	EVTSET2	Event set register 2
0x0180 002C	EVTSET3	Event set register 3
0x0180 0040	EVTCLR0	Event clear register 0
0x0180 0044	EVTCLR1	Event clear register 1
0x0180 0048	EVTCLR2	Event clear register 2
0x0180 004C	EVTCLR3	Event clear register 3
0x0180 0080	EVTMASK0	Event mask register 0
0x0180 0084	EVTMASK1	Event mask register 1
0x0180 0088	EVTMASK2	Event mask register 2
0x0180 008C	EVTMASK3	Event mask register 3
0x0180 00A0	MEVTFLAG0	Masked event flag register 0
0x0180 00A4	MEVTFLAG1	Masked event flag register 1
0x0180 00A8	MEVTFLAG2	Masked event flag register 2
0x0180 00AC	MEVTFLAG3	Masked event flag register 3
0x0180 00C0	EXPMASK0	Exception mask register 0
0x0180 00C4	EXPMASK1	Exception mask register 1
0x0180 00C8	EXPMASK2	Exception mask register 2
0x0180 00CC	EXPMASK3	Exception mask register 3
0x0180 00E0	MEXPFLAG0	Masked exception flag register 0
0x0180 00E4	MEXPFLAG1	Masked exception flag register 1
0x0180 00E8	MEXPFLAG2	Masked exception flag register 2
0x0180 00EC	MEXPFLAG3	Masked exception flag register 3
0x0180 0104	INTMUX1	Interrupt mux register 1
0x0180 0108	INTMUX2	Interrupt mux register 2
0x0180 010C	INTMUX3	Interrupt mux register 3
0x0180 0180	INTXSTAT	Interrupt exception status
0x0180 0184	INTXCLR	Interrupt exception clear
0x0180 0188	INTDMASK	Dropped interrupt mask register

6.9 External Memory Interface (EMIF)

DM6435 supports several memory and external device interfaces, including:

- Asynchronous EMIF (EMIFA) for interfacing to NOR Flash, SRAM, etc.
- NAND Flash

6.9.1 Asynchronous EMIF (EMIFA)

The DM6435 Asynchronous EMIF (EMIFA) provides an 8-bit data bus, an address bus width up to 24-bits, and 4 chip selects, along with memory control signals. These signals are multiplexed between these peripherals:

- EMIFA and NAND interfaces
- VPFE (CCDC)
- GPIO

6.9.2 NAND (NAND, SmartMedia, xD)

The EMIFA interface provides both the asynchronous EMIF and NAND interfaces. Four chip selects are provided and each are individually configurable to provide either EMIFA or NAND support. The NAND features supported are as follows.

- NAND flash on up to 4 asynchronous chip selects.
- 8-bit data bus width
- Programmable cycle timings.
- Performs ECC calculation.
- NAND Mode also supports SmartMedia and xD memory cards
- Boot ROM supports booting of the DM6435 from NAND flash located at CS2

The memory map for EMIFA and NAND registers is shown in Table 6-23. For more details on the EMIFA and NAND interfaces, see Section 2.9, *Documentation Support* for the link to the *TMS320DM643x DMP Peripherals Overview Reference Guide* (literature number SPRU983) for the *TMS320DM643x Asynchronous External Memory Interface (EMIF) User's Guide* (literature number SPRU984).

Table 6-23. EMIFA/NAND Registers

HEX ADDRESS RANGE	ACRONYM	REGISTER NAME
0x01E0 0000	RCSR	Revision Code and Status Register
0x01E0 0004	AWCCR	Asynchronous Wait Cycle Configuration Register
0x01E0 0008 - 0x01E0 000F	-	Reserved
0x01E0 0010	A1CR	Asynchronous 1 Configuration Register (CS2 Space)
0x01E0 0014	A2CR	Asynchronous 2 Configuration Register (CS3 Space)
0x01E0 0018	A3CR	Asynchronous 3 Configuration Register (CS4 Space)
0x01E0 001C	A4CR	Asynchronous 4 Configuration Register (CS5 Space)
0x01E0 0020 - 0x01E0 003F	-	Reserved
0x01E0 0040	EIRR	EMIF Interrupt Raw Register
0x01E0 0044	EIMR	EMIF Interrupt Mask Register
0x01E0 0048	EIMSR	EMIF Interrupt Mask Set Register
0x01E0 004C	EIMCR	EMIF Interrupt Mask Clear Register
0x01E0 0050 - 0x01E0 005F	-	Reserved
0x01E0 0060	NANDFCR	NAND Flash Control Register
0x01E0 0064	NANDFSR	NAND Flash Status Register
0x01E0 0070	NANDF1ECC	NAND Flash 1 ECC Register (CS2 Space)
0x01E0 0074	NANDF2ECC	NAND Flash 2 ECC Register (CS3 Space)
0x01E0 0078	NANDF3ECC	NAND Flash 3 ECC Register (CS4 Space)
0x01E0 007C	NANDF4ECC	NAND Flash 4 ECC Register (CS5 Space)
0x01E0 0080 - 0x01E0 0FFF	-	Reserved

6.9.3 EMIFA Electrical Data/Timing

Table 6-24. Timing Requirements for Asynchronous Memory Cycles for EMIFA Module[1] (see Figure 6-14 and Figure 6-15)

NO.			-7/-6/-5/-4 -L/-Q6/-Q5/-Q4			UNIT
			MIN	NOM	MAX	
READS and WRITES						
2	$t_{w(EM\_WAIT)}$	Pulse duration, EM_WAIT assertion and deassertion	2E			ns
READS						
12	$t_{su(EMDV-EMOEH)}$	Setup time, EM_D[7:0] valid before $\overline{EM\_OE}$ high	5			ns
13	$t_{h(EMOEH-EMDIV)}$	Hold time, EM_D[7:0] valid after $\overline{EM\_OE}$ high	0			ns
14	$t_{su(EMWAIT-EMOEH)}$	Setup time, EM_WAIT asserted before $\overline{EM\_OE}$ high[2]	4E + 5			ns
WRITES						
28	$t_{su(EMWAIT-EMWEH)}$	Setup time, EM_WAIT asserted before $\overline{EM\_WE}$ high[2]	4E + 5			ns

(1) E = SYSCLK3 period in ns for EMIFA. For example, when running the DSP CPU at 600 MHz, use E = **10** ns.
(2) Setup before end of STROBE phase (if no extended wait states are inserted) by which EM_WAIT must be asserted to add extended wait states. Figure 6-16 and Figure 6-17 describe EMIF transactions that include extended wait states inserted during the STROBE phase. However, cycles inserted as part of this extended wait period should not be counted; the 4E requirement is to the start of where the HOLD phase would begin if there were no extended wait cycles.

Table 6-25. Switching Characteristics Over Recommended Operating Conditions for Asynchronous Memory Cycles for EMIFA Module(1)(2) (see Figure 6-14 and Figure 6-15)

NO.	PARAMETER		-7/-6/-5/-4 -L/-Q6/-Q5/-Q4			UNIT
			MIN	NOM	MAX	
READS and WRITES						
1	$t_{d(TURNAROUND)}$	Turn around time		(TA + 1) * E		ns
READS						
3	$t_{c(EMRCYCLE)}$	EMIF read cycle time		(RS + RST + RH + TA + 4) * E(3)		ns
4	$t_{su(EMCSL-EMOEL)}$	Output setup time, $\overline{EM\_CS[5:2]}$ low to $\overline{EM\_OE}$ low (SS = 0)	(RS + 1) * E - 4		(RS + 1) * E + 4	ns
		Output setup time, $\overline{EM\_CS[5:2]}$ low to $\overline{EM\_OE}$ low (SS = 1)	-4		4	ns
5	$t_{h(EMOEH-EMCSH)}$	Output hold time, $\overline{EM\_OE}$ high to $\overline{EM\_CS[5:2]}$ high (SS = 0)	(RH + 1) * E - 4		(RH + 1) * E + 4	ns
		Output hold time, $\overline{EM\_OE}$ high to $\overline{EM\_CS[5:2]}$ high (SS = 1)	-4		4	ns
6	$t_{su(EMBAV-EMOEL)}$	Output setup time, $\overline{EM\_BA[1:0]}$ valid to $\overline{EM\_OE}$ low	(RS + 1) * E - 4		(RS + 1) * E + 4	ns
7	$t_{h(EMOEH-EMBAIV)}$	Output hold time, $\overline{EM\_OE}$ high to $\overline{EM\_BA[1:0]}$ invalid	(RH + 1) * E - 4		(RH + 1) * E + 4	ns
8	$t_{su(EMBAV-EMOEL)}$	Output setup time, $\overline{EM\_A[21:0]}$ valid to $\overline{EM\_OE}$ low	(RS + 1) * E - 4		(RS + 1) * E + 4	ns
9	$t_{h(EMOEH-EMBAIV)}$	Output hold time, $\overline{EM\_OE}$ high to $\overline{EM\_A[21:0]}$ invalid	(RH + 1) * E - 4		(RH + 1) * E + 4	ns
10	$t_{w(EMOEL)}$	$\overline{EM\_OE}$ active low width		(RST + 1) * E(3)		ns
11	$t_{d(EMWAITH-EMOEH)}$	Delay time from EM_WAIT deasserted to $\overline{EM\_OE}$ high			4E + 4	ns
WRITES						
15	$t_{c(EMWCYCLE)}$	EMIF write cycle time		(WS + WST + WH + TA + 4) * E(3)		ns
16	$t_{su(EMCSL-EMWEL)}$	Output setup time, $\overline{EM\_CS[5:2]}$ low to $\overline{EM\_WE}$ low (SS = 0)	(WS + 1) * E - 4		(WS + 1) * E + 4	ns
		Output setup time, $\overline{EM\_CS[5:2]}$ low to $\overline{EM\_WE}$ low (SS = 1)	-4		4	ns
17	$t_{h(EMWEH-EMCSH)}$	Output hold time, $\overline{EM\_WE}$ high to $\overline{EM\_CS[5:2]}$ high (SS = 0)	(WH + 1) * E - 4		(WH + 1) * E + 4	ns
		Output hold time, $\overline{EM\_WE}$ high to $\overline{EM\_CS[5:2]}$ high (SS = 1)	-4		4	ns
18	$t_{su(EMRNW-EMWEL)}$	Output setup time, EM_R/$\overline{W}$ valid to $\overline{EM\_WE}$ low	(WS + 1) * E - 4		(WS + 1) * E + 4	ns
19	$t_{h(EMWEH-EMRNW)}$	Output hold time, $\overline{EM\_WE}$ high to EM_R/$\overline{W}$ invalid	(WH + 1) * E - 4		(WH + 1) * E + 4	ns
20	$t_{su(EMBAV-EMWEL)}$	Output setup time, $\overline{EM\_BA[1:0]}$ valid to $\overline{EM\_WE}$ low	(WS + 1) * E - 4		(WS + 1) * E + 4	ns
21	$t_{h(EMWEH-EMBAIV)}$	Output hold time, $\overline{EM\_WE}$ high to $\overline{EM\_BA[1:0]}$ invalid	(WH + 1) * E - 4		(WH + 1) * E + 4	ns
22	$t_{su(EMAV-EMWEL)}$	Output setup time, $\overline{EM\_A[21:0]}$ valid to $\overline{EM\_WE}$ low	(WS + 1) * E - 4		(WS + 1) * E + 4	ns
23	$t_{h(EMWEH-EMAIV)}$	Output hold time, $\overline{EM\_WE}$ high to $\overline{EM\_A[21:0]}$ invalid	(WH + 1) * E - 4		(WH + 1) * E + 4	ns

(1) RS = Read setup, RST = Read STrobe, RH = Read Hold, WS = Write Setup, WST = Write STrobe, WH = Write Hold, TA = Turn Around, EW = Extend Wait mode, SS = Select Strobe mode. These parameters are programmed via the Asynchronous *n* Configuration and Asynchronous Wait Cycle Configuration Registers.
(2) E = SYSCLK3 period in ns for EMIFA. For example, when running the DSP CPU at 600 MHz, use E = **10** ns.
(3) When EW = 1, the EMIF will extend the strobe period up to 4,096 additional cycles when the EM_WAIT pin is asserted by the external device.

Table 6-25. Switching Characteristics Over Recommended Operating Conditions for Asynchronous Memory Cycles for EMIFA Module (see Figure 6-14 and Figure 6-15) (continued)

NO.	PARAMETER		-7/-6/-5/-4 -L/-Q6/-Q5/-Q4			UNIT
			MIN	NOM	MAX	
24	$t_{w(EMWEL)}$	$\overline{EM\_WE}$ active low width		(WST + 1) * E[3]		ns
25	$t_{d(EMWAITH-EMWEH)}$	Delay time from EM_WAIT deasserted to $\overline{EM\_WE}$ high			4E + 4	ns
26	$t_{su(EMDV-EMWEL)}$	Output setup time, EM_D[7:0] valid to $\overline{EM\_WE}$ low	(WS + 1) * E - 4		(WS + 1) * E + 4	ns
27	$t_{h(EMWEH-EMDIV)}$	Output hold time, $\overline{EM\_WE}$ high to EM_D[7:0] invalid	(WH + 1) * E - 4		(WH + 1) * E + 4	ns

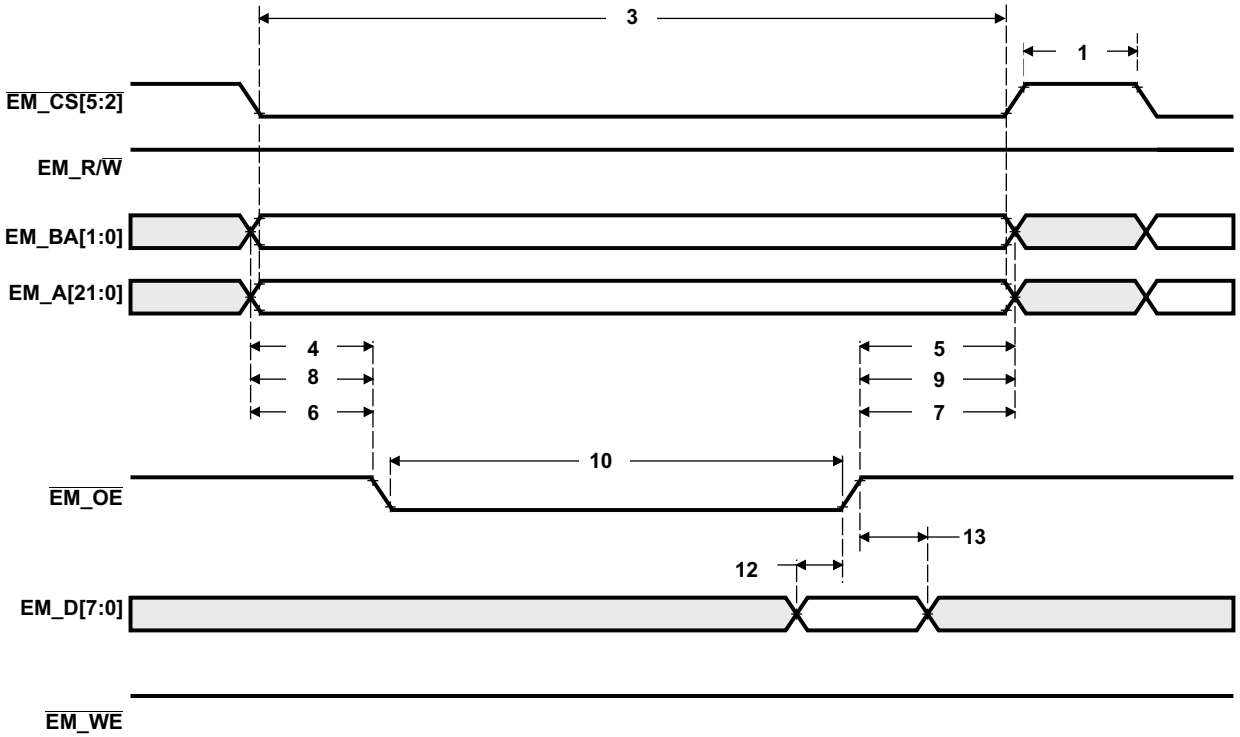

Figure 6-14. Asynchronous Memory Read Timing for EMIF

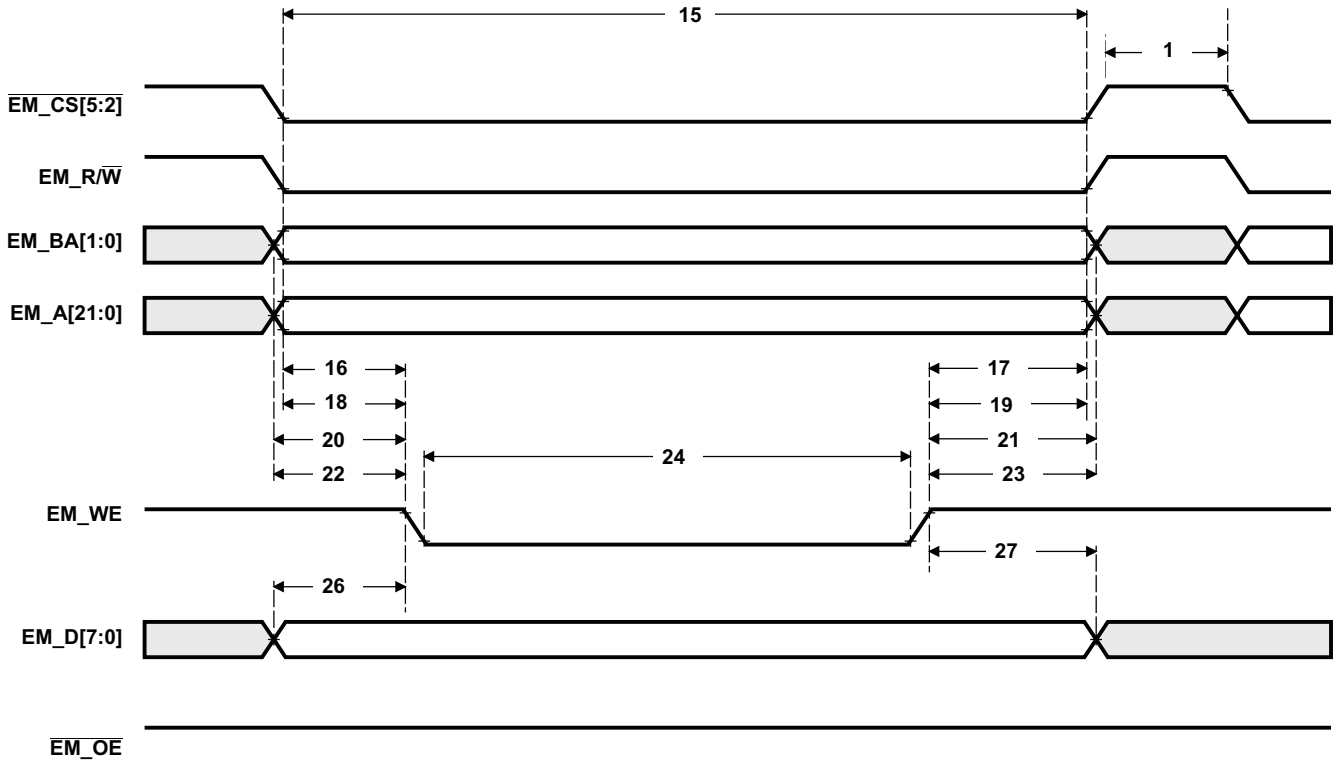

Figure 6-15. Asynchronous Memory Write Timing for EMIF

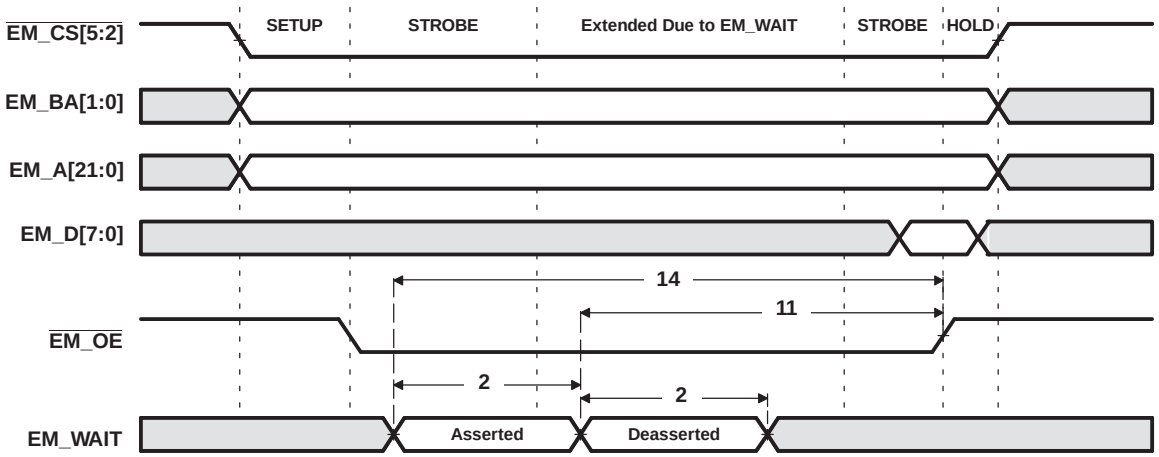

Figure 6-16. EM_WAIT Read Timing Requirements

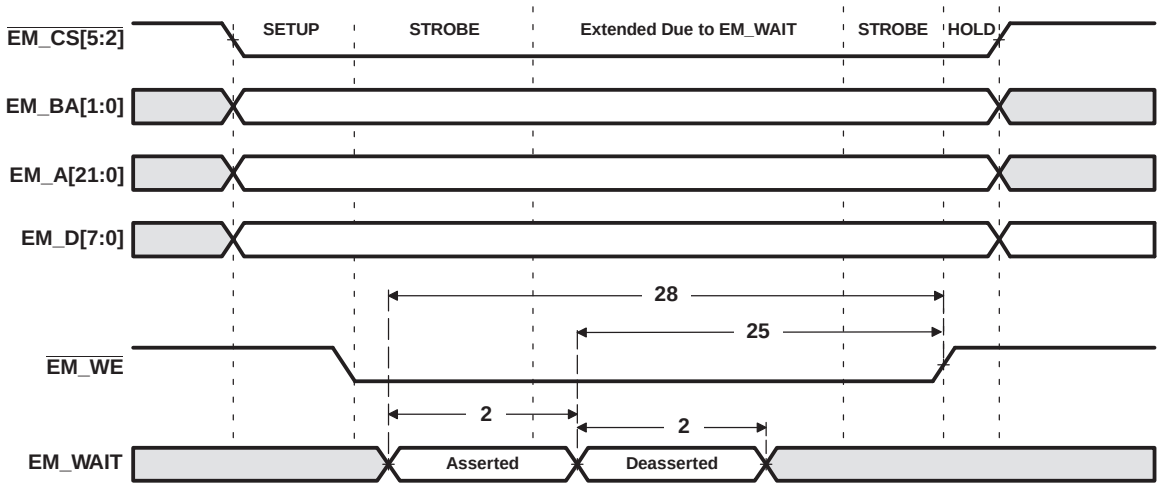

Figure 6-17. EM_WAIT Write Timing Requirements

6.9.4 DDR2 Memory Controller

The DDR2 Memory Controller is a dedicated interface to DDR2 SDRAM. It supports JESD79D-2A standard compliant DDR2 SDRAM Devices and can interface to either 16-bit or 32-bit DDR2 SDRAM devices. For details on the DDR2 Memory Controller, see Section 2.9, *Document Support* for the link to the *TMS320DM643x DMP Peripherals Overview Reference Guide* (literature number SPRU983) for the *TMS320C642x/DM643x DMP DDR2 Memory Controller User's Guide* (literature number SPRU986).

DDR2 SDRAM plays a key role in a DaVinci-based system. Such a system is expected to require a significant amount of high-speed external memory for:

- Buffering of input image data from sensors or video sources
- Intermediate buffering for processing/resizing of image data in the VPFE
- Intermediate buffering for large raw Bayer data image files while performing image processing functions
- Buffering for intermediate data while performing video encode and decode functions
- Storage of executable code for the DSP

A memory map of the DDR2 Memory Controller registers is shown in Table 6-26.

Table 6-26. DDR2 Memory Controller Registers

HEX ADDRESS RANGE	ACRONYM	REGISTER NAME
0x01C4 004C	DDRVTPER	DDR2 VTP Enable Register
0x01C4 2038	DDRVTPR	DDR2 VTP Register
0x2000 0000 - 0x2000 0003	-	Reserved
0x2000 0004	SDRSTAT	SDRAM Status Register
0x2000 0008	SDBCR	SDRAM Bank Configuration Register
0x2000 000C	SDRCR	SDRAM Refresh Control Register
0x2000 0010	SDTIMR	SDRAM Timing Register
0x2000 0014	SDTIMR2	SDRAM Timing Register 2
0x2000 0020	PBBPR	Peripheral Bus Burst Priority Register
0x2000 0024 - 0x2000 00BF	-	Reserved
0x2000 00C0	IRR	Interrupt Raw Register
0x2000 00C4	IMR	Interrupt Masked Register
0x2000 00C8	IMSR	Interrupt Mask Set Register
0x2000 00CC	IMCR	Interrupt Mask Clear Register

Table 6-26. DDR2 Memory Controller Registers (continued)

HEX ADDRESS RANGE	ACRONYM	REGISTER NAME
0x2000 00D0 - 0x2000 00E3	-	Reserved
0x2000 00E4	DDRPHYCR	DDR PHY Control Register
0x2000 00E8 - 0x2000 00EF	-	Reserved
0x2000 00F0	VTPIOCR	DDR VTP IO Control Register
0x2000 00F4 - 0x2000 7FFF	-	Reserved

6.9.4.1 DDR2 Memory Controller Electrical Data/Timing

The *Implementing DDR2 PCB Layout on the TMS320DM643x DMP DMSoC* Application Report (literature number SPRAAL6) specifies a complete DDR2 interface solution for the DM6435 as well as a list of compatible DDR2 devices. TI has performed the simulation and system characterization to ensure all DDR2 interface timings in this solution are met.

TI only supports board designs that follow the guidelines outlined in the *Implementing DDR2 PCB Layout on the TMS320DM643x DMP DMSoC* Application Report (literature number SPRAAL6).

Table 6-27. Switching Characteristics Over Recommended Operating Conditions for DDR2 Memory Controller(1)(2)(see Figure 6-18)

NO.	PARAMETER		-7/-6/-5/-4 -L/-Q6/-Q5/-Q4		UNIT
			MIN	MAX	
1	$t_{c(DDR\_CLK)}$	Cycle time, DDR_CLK	6	8	ns

(1) DDR_CLK cycle time = 2 x PLL2 _SYSCLK1 cycle time.
(2) The PLL2 Controller ***must*** be programmed such that the resulting DDR_CLK clock frequency is within the specified range.

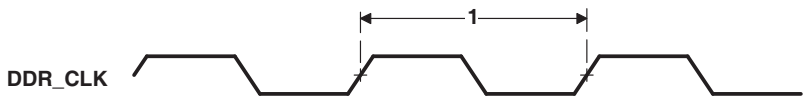

Figure 6-18. DDR2 Memory Controller Clock Timing

6.10 Video Processing Sub-System (VPSS) Overview

The DM6435 Video Processing Sub-System (VPSS) provides a Video Processing Front End (VPFE) input interface for external imaging peripherals (i.e., image sensors, video decoders, etc.); the DM6435 VPSS ***does not*** support a Video Processing Back End (VPBE) output interface.

The VPSS register memory mapping is shown in Table 6-28.

Table 6-28. VPSS Register Descriptions

HEX ADDRESS RANGE	REGISTER ACRONYM	Description
0x01C7 3400	PID	Peripheral Revision and Class Information
0x01C7 3404	PCR	VPSS Control Register
0x01C7 3408	-	Reserved
0x01C7 3508	SDR_REG_EXP	SDRAM Non Real-Time Read Request Expand
0x01C7 350C - 0x01C7 3FFF	-	Reserved

6.10.1 Video Processing Front-End (VPFE)

The Video Processing Front-End (VPFE) consists of the CCD Controller (CCDC), Preview Engine, Resizer, Hardware 3A (H3A) Statistic Generator, and Histogram blocks. Together, these modules provide DM6435 with a powerful and flexible front-end interface. These modules are briefly described below:

- The CCDC provides an interface to image sensors and digital video sources.
- The Preview Engine is a parameterized hardwired image processing block which is used for converting RAW color data from a Bayer pattern to YUV 4:2:2.
- The Resizer module re-sizes the input image data to the desired display or video encoding resolution.
- The H3A module provides control loops for Auto Focus (AF), Auto White Balance (AWB) and Auto Exposure (AE).
- The Histogram module bins input color pixels, depending on the amplitude, and provides statistics required to implement various 3A (AE/AF/AWB) algorithms and tune the final image/video output.

The VPFE register memory mapping is shown in Table 6-29.

Table 6-29. VPFE Register Address Range Descriptions

HEX ADDRESS RANGE	ACRONYM	REGISTER NAME
0x01C7 0400 – 0x01C7 07FF	CCDC	VPFE – CCD Controller
0x01C7 0800 – 0x01C7 0BFF	PREV	VPFE – Preview Engine/Image Signal Processor
0x01C7 0C00 – 0x01C7 09FF	RESZ	VPFE – Resizer
0x01C7 1000 – 0x01C7 13FF	HIST	VPFE – Histogram
0x01C7 1400 – 0x01C7 17FF	H3A	VPFE – Hardware 3A (Auto-Focus/WB/Exposure)
0x01C7 3400 – 0x01C7 3FFF	VPSS	VPSS Shared Buffer Logic Registers

6.10.1.1 CCD Controller (CCDC)

The CCDC receives raw image/video data from sensors (CMOS or CCD) or YUV video data in numerous formats from video decoder devices. The following features are supported by the CCDC module.

- Conventional Bayer pattern format.
- Generates HD/VD timing signals and field ID to an external timing generator or can synchronize to an external timing generator.
- Interface to progressive and interlaced sensors.
- REC656/CCIR-656 standard (YCbCr 4:2:2 format, either 8- or 16-bit).
- YCbCr 4:2:2 format, either 8- or 16-bit with discrete H and VSYNC signals.
- Up to 16-bit input.

- Optical black clamping signal generation.
- Shutter signal control.
- Digital clamping and black level compensation.
- 10-bit to 8-bit A-law compression.
- Low-pass filter prior to writing to SDRAM. If this filter is enabled, 2 pixels each in the left and right edges of each line are cropped from the output.
- Output range from 16-bits to 8-bits wide (8-bits wide allows for 50% saving in storage area).
- Downsampling via programmable culling patterns.
- Control output to the DDR2 via an external write enable signal.
- Up to 16K pixels (image size) in both the horizontal and vertical direction.

The CCDC register memory mapping is shown in Table 6-30.

Table 6-30. CCDC Register Descriptions

HEX ADDRESS RANGE	REGISTER ACRONYM	DESCRIPTION
0x01C7 0400	PID	Peripheral Revision and Class Information
0x01C7 0404	PCR	Peripheral Control Register
0x01C7 0408	SYN_MODE	SYNC and Mode Set Register
0x01C7 040C	HD_VD_WID	HD and VD Signal Width
0x01C7 0410	PIX_LINES	Number of Pixels in a Horizontal Line and Number of Lines in a Frame
0x01C7 0414	HORZ_INFO	Horizontal Pixel Information
0x01C7 0418	VERT_START	Vertical Line - Settings for the Starting Pixel
0x01C7 041C	VERT_LINES	Number of Vertical Lines
0x01C7 0420	CULLING	Culling Information in Horizontal and Vertical Directions
0x01C7 0424	HSIZE_OFF	Horizontal Size
0x01C7 0428	SDOFST	SDRAM/DDRAM Line Offset
0x01C7 042C	SDR_ADDR	SDRAM Address
0x01C7 0430	CLAMP	Optical Black Clamping Settings
0x01C7 0434	DCSUB	DC Clamp
0x01C7 0438	COLPTN	CCD Color Pattern
0x01C7 043C	BLKCMP	Black Compensation
0x01C7 0440	-	Reserved
0x01C7 0444	-	Reserved
0x01C7 0448	VDINT	VD Interrupt Timing
0x01C7 044C	ALAW	A-Law Setting
0x01C7 0450	REC656IF	REC656 Interface
0x01C7 0454	CCDCFG	CCD Configuration
0x01C7 0458	FMTCFG	Data Reformatter/Video Port Configuration
0x01C7 045C	FMT_HORZ	Data Reformatter/Video Input Interface Horizontal Information
0x01C7 0460	FMT_VERT	Data Reformatter/Video Input Interface Vertical Information
0x01C7 0464	FMT_ADDR0	Address Pointer 0 Setup
0x01C7 0468	FMT_ADDR1	Address Pointer 1 Setup
0x01C7 046C	FMT_ADDR2	Address Pointer 2 Setup
0x01C7 0470	FMT_ADDR3	Address Pointer 3 Setup
0x01C7 0474	FMT_ADDR4	Address Pointer 4 Setup
0x01C7 0478	FMT_ADDR5	Address Pointer 5 Setup
0x01C7 047C	FMT_ADDR6	Address Pointer 6 Setup
0x01C7 0480	FMT_ADDR7	Address Pointer 7 Setup
0x01C7 0484	PRGEVEN_0	Program Entries 0-7 for Even Line

Table 6-30. CCDC Register Descriptions (continued)

HEX ADDRESS RANGE	REGISTER ACRONYM	DESCRIPTION
0x01C7 0488	RRGEVEN_1	Program Entries 8-15 for Even Line
0x01C7 048C	PRGGODD_0	Program Entries 0-7 for Odd Line
0x01C7 0490	PRGGODD_1	Program Entries 8-15 for Odd Line
0x01C7 0494	VP_OUT	Video Port Output Settings

6.10.1.2 Preview Engine

The preview engine transforms raw unprocessed image/video data from a sensor (CMOS or CCD) into YCbCr 4:2:2 data. The output of the preview engine is used for both video compression and external display devices such as a NTSC/PAL analog encoder or a digital LCD. The following features are supported by the preview engine.

- Accepts conventional Bayer pattern formats.
- Input image/video data from either the CCD/CMOS controller or the DDR2 memory.
- Output width up to 1280 pixels wide.
- Automatic/mandatory cropping of pixels/lines when edge processing is performed. If all the corresponding modules are enabled, a total of 14 pixels per line (7 left most and 7 right most) and 8 lines (4 top most and 4 bottom most) will not be output.
- Simple horizontal averaging (by factors of 2, 4, or 8) to handle input widths that are greater than 1280 (plus the cropped number) pixels wide.
- Dark frame capture to DDR2.
- Dark frame subtraction for every input raw data frame, fetched from DDR2, pixel-by-pixel to improve video quality.
- Lens shading compensation. Each input pixel is multiplied with a corresponding 8-bit gain value and the result is right shifted by a programmable parameter (0-7 bits).
- A-law decompression to transform non-linear 8-bit data to 10-bit linear data. This feature allows data in DDR2 to be 8-bits, which saves 50% of the area if the input to the preview engine is from the DDR2.
- Horizontal median filter for reducing temperature induced noise in pixels.
- Programmable noise filter that operates on a 3x3 grid of the same color (effectively, this is a five line storage requirement).
- Digital gain and white balance (color separate gain for white balance).
- Programmable CFA interpolation that operates on a 5x5 grid.
- Conventional Bayer pattern RGB and complementary color sensors.
- Support for an image that is downsampled by 2x in the horizontal direction (with and without phase correction). In this case, the image is 2/3 populated instead of the conventional 1/3 colors.
- Support for an image that is downsampled by 2x in both the horizontal and vertical direction. In this case, the image is fully populated instead of the conventional 1/3 colors.
- Programmable RGB-to-RGB blending matrix (9 coefficients for the 3x3 matrix).
- Fully programmable gamma correction (1024 entries for each color held in an on-chip RAM).
- Programmable color conversion (RGB to YUV) coefficients (9 coefficients for the 3x3 matrix).
- Luminance enhancement (non-linear) and chrominance suppression & offset.

The Preview Engine register memory mapping is shown in Table 6-31.

Table 6-31. Preview Engine Register Descriptions

HEX ADDRESS RANGE	REGISTER ACRONYM	DESCRIPTION
0x01C7 0800	PID	Peripheral Revision and Class Information
0x01C7 0804	PCR	Peripheral Control Register
0x01C7 0808	HORZ_INFO	Horizontal Information/Setup

Table 6-31. Preview Engine Register Descriptions (continued)

HEX ADDRESS RANGE	REGISTER ACRONYM	DESCRIPTION
0x01C7 080C	VERT_INFO	Vertical Information/Setup
0x01C7 0810	RSDR_ADDR	Read Address From SDRAM
0x01C7 0814	RADR_OFFSET	Line Offset for the Read Data
0x01C7 0818	DSDR_ADDR	Dark Frame Address From SDRAM
0x01C7 081C	DRKF_OFFSET	Line Offset for the Dark Frame Data
0x01C7 0820	WSDR_ADDR	Write Address to the SDRAM
0x01C7 0824	WADD_OFFSET	Line Offset for the Write Data
0x01C7 0828	AVE	Input Formatter/Averager
0x01C7 082C	HMED	Horizontal Median Filter
0x01C7 0830	NF	Noise Filter
0x01C7 0834	WB_DGAIN	White Balance Digital Gain
0x01C7 0838	WBGAIN	White Balance Coefficients
0x01C7 083C	WBSEL	White Balance Coefficients Selection
0x01C7 0840	CFA	CFA Register
0x01C7 0844	BLKADJOFF	Black Adjustment Offset
0x01C7 0848	RGB_MAT1	RGB2RGB Blending Matrix Coefficients
0x01C7 084C	RGB_MAT2	RGB2RGB Blending Matrix Coefficients
0x01C7 0850	RGB_MAT3	RGB2RGB Blending Matrix Coefficients
0x01C7 0854	RGB_MAT4	RGB2RGB Blending Matrix Coefficients
0x01C7 0858	RGB_MAT5	RGB2RGB Blending Matrix Coefficients
0x01C7 085C	RGB_OFF1	RGB2RGB Blending Matrix Offsets
0x01C7 0860	RGB_OFF2	RGB2RGB Blending Matrix Offsets
0x01C7 0864	CSC0	Color Space Conversion Coefficients
0x01C7 0868	CSC1	Color Space Conversion Coefficients
0x01C7 086C	CSC2	Color Space Conversion Coefficients
0x01C7 0870	CSC_OFFSET	Color Space Conversion Offsets
0x01C7 0874	CNT_BRT	Contrast and Brightness Settings
0x01C7 0878	CSUP	Chrominance Suppression Settings
0x01C7 087C	SETUP_YC	Maximum/Minimum Y and C Settings
0x01C7 0880	SET_TBL_ADDRESS	Setup Table Addresses
0x01C7 0884	SET_TBL_DATA	Setup Table Data

6.10.1.3 Resizer

The resizer module can accept input image/video data from either the preview engine or DDR2. The output of the resizer module is sent to DDR2. The following features are supported by the resizer module.

- An output width up to 1280 horizontal pixels.
- Input from external DDR2.
- Up to 4x upsampling (digital zoom).
- Bi-cubic interpolation (4-tap horizontal, 4-tap vertical) can be implemented with the programmable filter coefficients.
- 8 phases of filter coefficients.
- Optional bi-linear interpolation for the chrominance components.
- Up to 1/4x downsampling
- 4-tap horizontal and 4-tap vertical filter coefficients (with 8-phases) for 1x to 1/2x downsampling
- 1/2x to 1/4x downsampling, for 7-tap mode with 4-phases.
- Resizing either YUV 4:2:2 packed data (16-bits) or color separate data (8-bit data within DDR) that is contiguous.

- Separate/independent resizing factor for the horizontal and vertical directions.
- Upsampling and downsampling ratios that are available are: 256/N, with N ranging from 64 to 1024.
- Programmable luminance sharpening after the horizontal resizing and before the vertical resizing step.

The Resizer register memory mapping is shown in Table 6-32.

Table 6-32. Resizer Register Descriptions

HEX ADDRESS RANGE	REGISTER ACRONYM	DESCRIPTION
0x01C7 0C00	PID	Peripheral Revision and Class Information
0x01C7 0C04	PCR	Peripheral Control Register
0x01C7 0C08	RSZ_CNT	Resizer Control Bits
0x01C7 0C0C	OUT_SIZE	Output Width and Height After Resizing
0x01C7 0C10	IN_START	Input Starting Information
0x01C7 0C14	IN_SIZE	Input Width and Height Before Resizing
0x01C7 0C18	SDR_INADD	Input SDRAM Address
0x01C7 0C1C	SDR_INOFF	SDRAM Offset for the Input Line
0x01C7 0C20	SDR_OUTADD	Output SDRAM Address
0x01C7 0C24	SDR_OUTOFF	SDRAM Offset for the Output Line
0x01C7 0C28	HFILT10	Horizontal Filter Coefficients 1 and 0
0x01C7 0C2C	HFILT32	Horizontal Filter Coefficients 3 and 2
0x01C7 0C30	HFILT54	Horizontal Filter Coefficients 5 and 4
0x01C7 0C34	HFILT76	Horizontal Filter Coefficients 7 and 6
0x01C7 0C38	HFILT98	Horizontal Filter Coefficients 9 and 8
0x01C7 0C3C	HFILT1110	Horizontal Filter Coefficients 11 and 10
0x01C7 0C40	HFILT1312	Horizontal Filter Coefficients 13 and 12
0x01C7 0C44	HFILT1514	Horizontal Filter Coefficients 15 and 14
0x01C7 0C48	HFILT1716	Horizontal Filter Coefficients 17 and 16
0x01C7 0C4C	HFILT1918	Horizontal Filter Coefficients 19 and 18
0x01C7 0C50	HFILT2120	Horizontal Filter Coefficients 21 and 20
0x01C7 0C54	HFILT2322	Horizontal Filter Coefficients 23 and 22
0x01C7 0C58	HFILT2524	Horizontal Filter Coefficients 25 and 24
0x01C7 0C5C	HFILT2726	Horizontal Filter Coefficients 27 and 26
0x01C7 0C60	HFILT2928	Horizontal Filter Coefficients 29 and 28
0x01C7 0C64	HFILT3130	Horizontal Filter Coefficients 31 and 30
0x01C7 0C68	VFILT10	Vertical Filter Coefficients 1 and 0
0x01C7 0C6C	VFILT32	Vertical Filter Coefficients 3 and 2
0x01C7 0C70	VFILT54	Vertical Filter Coefficients 5 and 4
0x01C7 0C74	VFILT76	Vertical Filter Coefficients 7 and 6
0x01C7 0C78	VFILT98	Vertical Filter Coefficients 9 and 8
0x01C7 0C7C	VFILT1110	Vertical Filter Coefficients 11 and 10
0x01C7 0C80	VFILT1312	Vertical Filter Coefficients 13 and 12
0x01C7 0C84	VFILT1514	Vertical Filter Coefficients 15 and 14
0x01C7 0C88	VFILT1716	Vertical Filter Coefficients 17 and 16
0x01C7 0C8C	VFILT1918	Vertical Filter Coefficients 19 and 18
0x01C7 0C90	VFILT2120	Vertical Filter Coefficients 21 and 20
0x01C7 0C94	VFILT2322	Vertical Filter Coefficients 23 and 22
0x01C7 0C98	VFILT2524	Vertical Filter Coefficients 25 and 24
0x01C7 0C9C	VFILT2726	Vertical Filter Coefficients 27 and 26
0x01C7 0CA0	VFILT2928	Vertical Filter Coefficients 29 and 28
0x01C7 0CA4	VFILT3130	Vertical Filter Coefficients 31 and 30

Table 6-32. Resizer Register Descriptions (continued)

HEX ADDRESS RANGE	REGISTER ACRONYM	DESCRIPTION
0x01C7 0CA8	YENH	Luminance Enhancer

6.10.1.4 Hardware 3A (H3A)

The Hardware 3A (H3A) module provides control loops for Auto Focus, Auto White Balance and Auto Exposure. There are 2 main components of the H3A module:

- Auto Focus (AF) Engine
- Auto Exposure (AE) & Auto White Balance (AWB) Engine

The AF engine extracts and filters the red, green, and blue data from the input image/video data and provides either the accumulation or peaks of the data in a specified region. The specified region is a two dimensional block of data and is referred to as a “paxel” for the case of AF.

The AE/AWB Engine accumulates the values and checks for saturated values in a sub sampling of the video data. In the case of the AE/AWB, the two-dimensional block of data is referred to as a “window”. The number, dimensions, and starting position of the AF paxels and the AE/AWB windows are separately programmable.

The H3A register memory mapping is shown in Table 6-33.

Table 6-33. H3A Register Descriptions

HEX ADDRESS RANGE	REGISTER ACRONYM	DESCRIPTION
0x01C7 1400	PID	Peripheral Revision and Class Information
0x01C7 1404	PCR	Peripheral Control Register
0x01C7 1408	AFPAX1	Setup for the AF Engine Paxel Configuration
0x01C7 140C	AFPAX2	Setup for the AF Engine Paxel Configuration
0x01C7 1410	AFPAXSTART	Start Position for AF Engine Paxels
0x01C7 1414	AFIIRSH	Start Position for IIRSH
0x01C7 1418	AFBUFST	SDRAM/DDRAM Start Address for AF Engine
0x01C7 141C	AFCOEF010	IIR Filter Coefficient Data for SET 0
0x01C7 1420	AFCOEF032	IIR Filter Coefficient Data for SET 0
0x01C7 1424	AFCOEFF054	IIR Filter Coefficient Data for SET 0
0x01C7 1428	AFCOEFF076	IIR Filter Coefficient Data for SET 0
0x01C7 142C	AFCOEFF098	IIR Filter Coefficient Data for SET 0
0x01C7 1430	AFCOEFF0010	IIR Filter Coefficient Data for SET 0
0x01C7 1434	AFCOEF110	IIR Filter Coefficient Data for SET 1
0x01C7 1438	AFCOEF132	IIR Filter Coefficient Data for SET 1
0x01C7 143C	AFCOEFF154	IIR Filter Coefficient Data for SET 1
0x01C7 1440	AFCOEFF176	IIR Filter Coefficient Data for SET 1
0x01C7 1444	AFCOEFF198	IIR Filter Coefficient Data for SET 1
0x01C7 1448	AFCOEFF1010	IIR Filter Coefficient Data for SET 1
0x01C7 144C	AEWWIN1	Configuration for AE/AWB Windows
0x01C7 1450	AEWINSTART	Start Position for AE/AWB Windows
0x01C7 1454	AEWINBLK	Start Position and Height for Black Line of AE/AWB Windows
0x01C7 1458	AEWSUBWIN	Configuration for Subsample Data in AE/AWB Window
0x01C7 145C	AEWBUFST	SDRAM/DDRAM Start Address for AE/AWB Engine

6.10.1.4.1 Auto Focus (AF) Engine

The following features are supported by the Auto Focus (AF) Engine.

- Peak Mode in a Paxel (a Paxel is defined as a two dimensional block of pixels).
- Accumulate the maximum Focus Value of each line in a Paxel

- Accumulation/Sum Mode (instead of Peak mode).
- Accumulate Focus Value in a Paxel.
- Up to 36 Paxels in the horizontal direction and up to 128 Paxels in the vertical direction.
- Programmable width and height for the Paxel. All paxels in the frame will be of same size.
- Programmable red, green, and blue position within a 2x2 matrix.
- Separate horizontal start for paxel and filtering.
- Programmable vertical line increments within a paxel.
- Parallel IIR filters configured in a dual-biquad configuration with individual coefficients (2 filters with 11 coefficients each). The filters are intended to compute the sharpness/peaks in the frame to focus on.

6.10.1.4.2 Auto Exposure (AE) and Auto White Balance (AWB) Engine

The following features are supported by the Auto Exposure (AE) and Auto White Balance (AWB) Engine.

- Accumulate clipped pixels along with all non-saturated pixels.
- Up to 36 horizontal windows.
- Up to 128 vertical windows.
- Programmable width and height for the windows. All windows in the frame will be of same size.
- Separate vertical start coordinate and height for a black row of paxels that is different than the remaining color paxels.
- Programmable Horizontal Sampling Points in a window.
- Programmable Vertical Sampling Points in a window.

6.10.1.5 Histogram

The histogram module accepts raw image/video data and bins the pixels on a value (and color separate) basis. The value of the pixel itself is not stored, but each bin contains the number of pixels that are within the appropriate set range. The source of the raw data for the histogram is typically a CCD/CMOS sensor (via the CCDC module) or optionally from DDR2. The following features are supported by the histogram module.

- Up to four regions/areas.
- Separate horizontal/vertical start and end position for each region.
- Pixels from overlapping regions are accumulated into the highest priority region. The priority is: region0 > region1 > region2 > region3.
- Interface to conventional Bayer pattern. Each region can accumulate either 3 or 4 colors.
- 32, 64, 128, or 256 bins per color per region.
- 32, 64, or 128 bins per color for 2 regions.
- 32 or 64 bins per color for 3 or 4 regions.
- Automatic clear of histogram RAM after an ARM read.
- Saturation of the pixel count if the count exceeds the maximum value (each memory location is 20-bit wide).
- Downshift ranging from 0 to 7 bits (maximum bin range 128).
- The last bin (highest range of values) will accumulate any value that is higher than the lower bound.

The Histogram register memory mapping is shown in Table 6-34.

Table 6-34. Histogram Register Descriptions

HEX ADDRESS RANGE	REGISTER ACRONYM	DESCRIPTION
0x01C7 1000	PID	Peripheral Revision and Class Information Register
0x01C7 1004	PCR	Peripheral Control Register
0x01C7 1008	HIST_CNT	Histogram Control Bits Register
0x01C7 100C	WB_GAIN	White/Channel Balance Settings Register

Table 6-34. Histogram Register Descriptions (continued)

HEX ADDRESS RANGE	REGISTER ACRONYM	DESCRIPTION
0x01C7 1010	R0_HORZ	Region 0 Horizontal Information Register
0x01C7 1014	R0_VERT	Region 0 Vertical Information Register
0x01C7 1018	R1_HORZ	Region 1 Horizontal Information Register
0x01C7 101C	R1_VERT	Region 1 Vertical Information Register
0x01C7 1020	R2_HORZ	Region 2 Horizontal Information Register
0x01C7 1024	R2_VERT	Region 2 Vertical Information Register
0x01C7 1028	R3_HORZ	Region 3 Horizontal Information Register
0x01C7 102C	R3_VERT	Region 3 Vertical Information Register
0x01C7 1030	HIST_ADDR	Histogram Address for Data to be Read Register
0x01C7 1034	HIST_DATA	Histogram Data That is Read From the Memory Register
0x01C7 1038	RADD	Read Address From DDR2 Memory Register
0x01C7 103C	RADD_OFF	Read Address Offset for Each Line in the DDR2 Memory Register
0x01C7 1040	H_V_INFO	Horizontal/Vertical Information Register (Horizontal/Vertical Number of Pixels When Data is Read From DDR2 Memory Information Register)

6.10.1.6 VPFE Electrical Data/Timing

Table 6-35. Timing Requirements for VPFE PCLK Master/Slave Mode(1) (see Figure 6-19)

NO.			-7/-6/-5/-4 -L/-Q6/-Q5/-Q4		UNIT
			MIN	MAX	
1	$t_{c(PCLK)}$	Cycle time, PCLK	10.204		ns
2	$t_{w(PCLKH)}$	Pulse duration, PCLK high	0.4P		ns
3	$t_{w(PCLKL)}$	Pulse duration, PCLK low	0.4P		ns
4	$t_{t(PCLK)}$	Transition time, PCLK		7	ns

(1) P = PCLK period in ns.

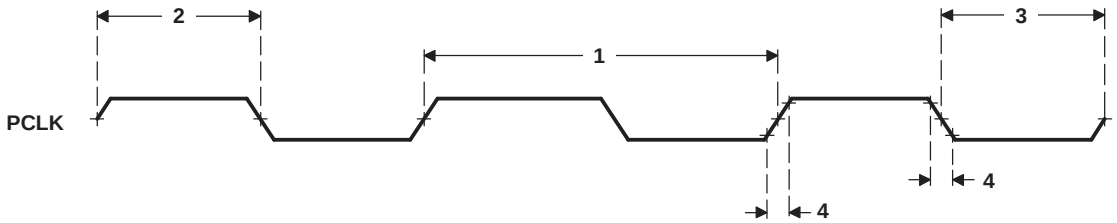

Figure 6-19. VPFE PCLK Timing

Table 6-36. Timing Requirements for VPFE (CCD) Slave Mode(1) (see Figure 6-20)

NO.			-7/-6/-5/-4 -L/-Q6/-Q5/-Q4		UNIT
			MIN	MAX	
5	$t_{su(CCDV-PCLK)}$	Setup time, CCD valid before PCLK edge	4.5		ns
6	$t_{h(PCLK-CCDV)}$	Hold time, CCD valid after PCLK edge	1		ns
7	$t_{su(HDV-PCLK)}$	Setup time, HD valid before PCLK edge	4.5		ns
8	$t_{h(PCLK-HDV)}$	Hold time, HD valid after PCLK edge	1		ns
9	$t_{su(VDV-PCLK)}$	Setup time, VD valid before PCLK edge	4.5		ns
10	$t_{h(PCLK-VDV)}$	Hold time, VD valid after PCLK edge	1		ns
11	$t_{su(C\_WEV-PCLK)}$	Setup time, C_WE valid before PCLK edge	4.5		ns
12	$t_{h(PCLK-C\_WEV)}$	Hold time, C_WE valid after PCLK edge	1		ns
13	$t_{su(C\_FIELDV-PCLK)}$	Setup time, C_FIELD valid before PCLK edge	4.5		ns
14	$t_{h(PCLK-C\_FIELDV)}$	Hold time, C_FIELD valid after PCLK edge	1		ns

(1) The VPFE may be configured to operate in either positive or negative edge clocking mode. When in positive edge clocking mode the rising edge of PCLK is referenced. When in negative edge clocking mode the falling edge of PCLK is referenced.

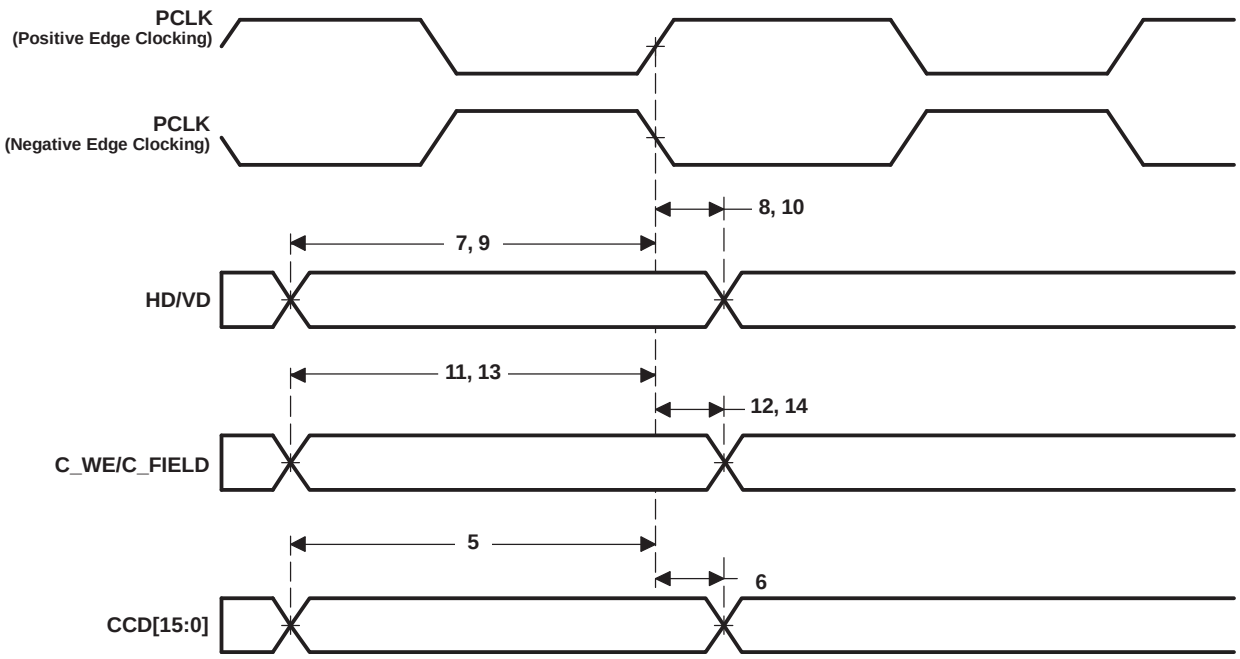

Figure 6-20. VPFE (CCD) Slave Mode Input Data Timing

Table 6-37. Timing Requirements for VPFE (CCD) Master Mode[(1)] (see Figure 6-21)

NO.			-7/-6/-5/-4 -L/-Q6/-Q5/-Q4		UNIT
			MIN	MAX	
15	$t_{su(CCDV-PCLK)}$	Setup time, CCD valid before PCLK edge	4.5		ns
16	$t_{h(PCLK-CCDV)}$	Hold time, CCD valid after PCLK edge	1		ns
23	$t_{su(CWEV-PCLK)}$	Setup time, C_WE valid before PCLK edge	4.5		ns
24	$t_{h(PCLK-CWEV)}$	Hold time, C_WE valid after PCLK edge	1		ns

(1) The VPFE may be configured to operate in either positive or negative edge clocking mode. When in positive edge clocking mode the rising edge of PCLK is referenced. When in negative edge clocking mode the falling edge of PCLK is referenced.

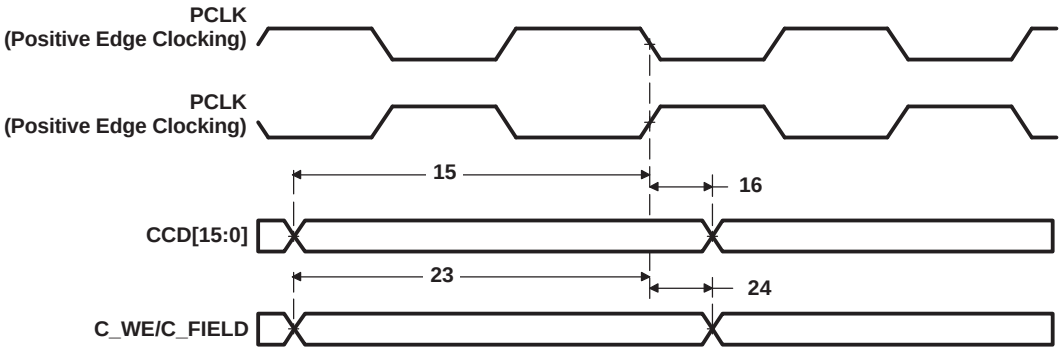

Figure 6-21. VPFE (CCD) Master Mode Input Data Timing

Table 6-38. Switching Characteristics Over Recommended Operating Conditions for VPFE (CCD) Master Mode[(1)] (see Figure 6-22)

NO.	PARAMETER		-7/-6/-5/-4 -L/-Q6/-Q5/-Q4		UNIT
			MIN	MAX	
18	$t_{d(PCLK-HDV)}$	Delay time, PCLK edge to HD valid	2	9.5	ns
20	$t_{d(PCLK-VDV)}$	Delay time, PCLK edge to VD valid	2	9.5	ns
22	$t_{d(PCLK-C\_FIELDV)}$	Delay time, PCLK edge to C_FIELD valid	2	9.5	ns

(1) The VPFE may be configured to operate in either positive or negative edge clocking mode. When in positive edge clocking mode the rising edge of PCLK is referenced. When in negative edge clocking mode the falling edge of PCLK is referenced.

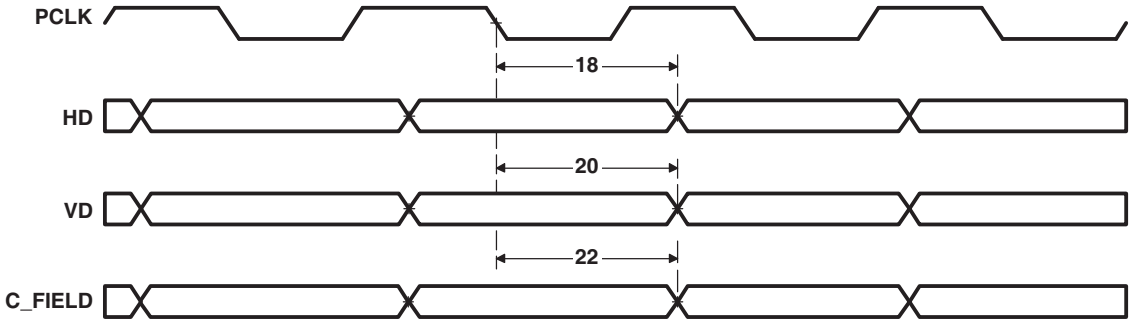

Figure 6-22. VPFE (CCD) Master Mode Control Output Data Timing

6.11 Universal Asynchronous Receiver/Transmitter (UART)

DM6435 has 2 UART peripherals. Each UART has the following features:

- 16-byte storage space for both the transmitter and receiver FIFOs
- 1, 4, 8, or 14 byte selectable receiver FIFO trigger level for autoflow control and DMA
- DMA signaling capability for both received and transmitted data
- Programmable auto-rts and auto-cts for autoflow control
- Frequency pre-scale values from 1 to 65,535 to generate appropriate baud rates
- Prioritized interrupts
- Programmable serial data formats
  - 5, 6, 7, or 8-bit characters
  - Even, odd, or no parity bit generation and detection
  - 1, 1.5, or 2 stop bit generation
- False start bit detection
- Line break generation and detection
- Internal diagnostic capabilities
  - Loopback controls for communications link fault isolation
  - Break, parity, overrun, and framing error simulation
- Modem control functions (CTS, RTS) on ***UART0 only***.

The UART0/1 registers are listed in Table 6-39 and Table 6-40 .

6.11.1 UART Peripheral Register Description(s)

Table 6-39. UART0 Register Descriptions

HEX ADDRESS RANGE	ACRONYM	REGISTER NAME
0x01C2 0000	RBR	UART0 Receiver Buffer Register (Read Only)
0x01C2 0000	THR	UART0 Transmitter Holding Register (Write Only)
0x01C2 0004	IER	UART0 Interrupt Enable Register
0x01C2 0008	IIR	UART0 Interrupt Identification Register (Read Only)
0x01C2 0008	FCR	UART0 FIFO Control Register (Write Only)
0x01C2 000C	LCR	UART0 Line Control Register
0x01C2 0010	MCR	UART0 Modem Control Register
0x01C2 0014	LSR	UART0 Line Status Register
0x01C2 0018	-	Reserved
0x01C2 001C	-	Reserved
0x01C2 0020	DLL	UART0 Divisor Latch (LSB)
0x01C2 0024	DLH	UART0 Divisor Latch (MSB)
0x01C2 0028	PID1	Peripheral Identification Register 1
0x01C2 002C	PID2	Peripheral Identification Register 2
0x01C2 0030	PWREMU_MGMT	UART0 Power and Emulation Management Register
0x01C2 0034 - 0x01C2 03FF	-	Reserved

Table 6-40. UART1 Register Descriptions

HEX ADDRESS RANGE	ACRONYM	REGISTER NAME
0x01C2 0400	RBR	UART1 Receiver Buffer Register (Read Only)
0x01C2 0400	THR	UART1 Transmitter Holding Register (Write Only)
0x01C2 0404	IER	UART1 Interrupt Enable Register

Table 6-40. UART1 Register Descriptions (continued)

HEX ADDRESS RANGE	ACRONYM	REGISTER NAME
0x01C2 0408	IIR	UART1 Interrupt Identification Register (Read Only)
0x01C2 0408	FCR	UART1 FIFO Control Register (Write Only)
0x01C2 040C	LCR	UART1 Line Control Register
0x01C2 0410	MCR	UART1 Modem Control Register
0x01C2 0414	LSR	UART1 Line Status Register
0x01C2 0418	-	Reserved
0x01C2 041C	-	Reserved
0x01C2 0420	DLL	UART1 Divisor Latch (LSB)
0x01C2 0424	DLH	UART1 Divisor Latch (MSB)
0x01C2 0428	PID1	Peripheral Identification Register 1
0x01C2 042C	PID2	Peripheral Identification Register 2
0x01C2 0430	PWREMU_MGMT	UART1 Power and Emulation Management Register
0x01C2 0434 - 0x01C2 07FF	-	Reserved

6.11.2 UART Electrical Data/Timing

Table 6-41. Timing Requirements for UARTx Receive[(1)] (see Figure 6-23)

NO.			-7/-6/-5/-4 -L/-Q6/-Q5/-Q4		UNIT
			MIN	MAX	
4	$t_{w(URXDB)}$	Pulse duration, receive data bit (URXDx) [15/30/100 pF]	0.96U	1.05U	ns
5	$t_{w(URXSB)}$	Pulse duration, receive start bit [15/30/100 pF]	0.96U	1.05U	ns

(1) U = UART baud time = 1/programmed baud rate.

Table 6-42. Switching Characteristics Over Recommended Operating Conditions for UARTx Transmit[(1)] (see Figure 6-23)

NO.	PARAMETER		-7/-6/-5/-4 -L/-Q6/-Q5/-Q4		UNIT
			MIN	MAX	
1	$f_{(baud)}$	Maximum programmable baud rate		128	kHz
2	$t_{w(UTXDB)}$	Pulse duration, transmit data bit (UTXDx) [15/30/100 pF]	U - 2	U + 2	ns
3	$t_{w(UTXSB)}$	Pulse duration, transmit start bit [15/30/100 pF]	U - 2	U + 2	ns

(1) U = UART baud time = 1/programmed baud rate.

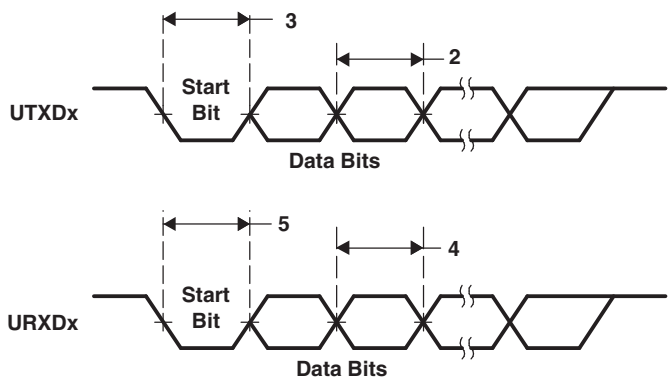

Figure 6-23. UART Transmit/Receive Timing

6.12 Inter-Integrated Circuit (I2C)

The inter-integrated circuit (I2C) module provides an interface between DM6435 and other devices compliant with Philips Semiconductors Inter-IC bus (I^2C-bus™) specification version 2.1. External components attached to this 2-wire serial bus can transmit/receive up to 8-bit data to/from the DSP through the I2C module. The I2C port *does not* support CBUS compatible devices.

The I2C port supports:

- Compatible with Philips I2C Specification Revision 2.1 (January 2000)
- Fast Mode up to 400 Kbps (no fail-safe I/O buffers)
- Noise Filter to Remove Noise 50 ns or less
- Seven- and Ten-Bit Device Addressing Modes
- Master (Transmit/Receive) and Slave (Transmit/Receive) Functionality
- Events: DMA, Interrupt, or Polling
- Slew-Rate Limited Open-Drain Output Buffers

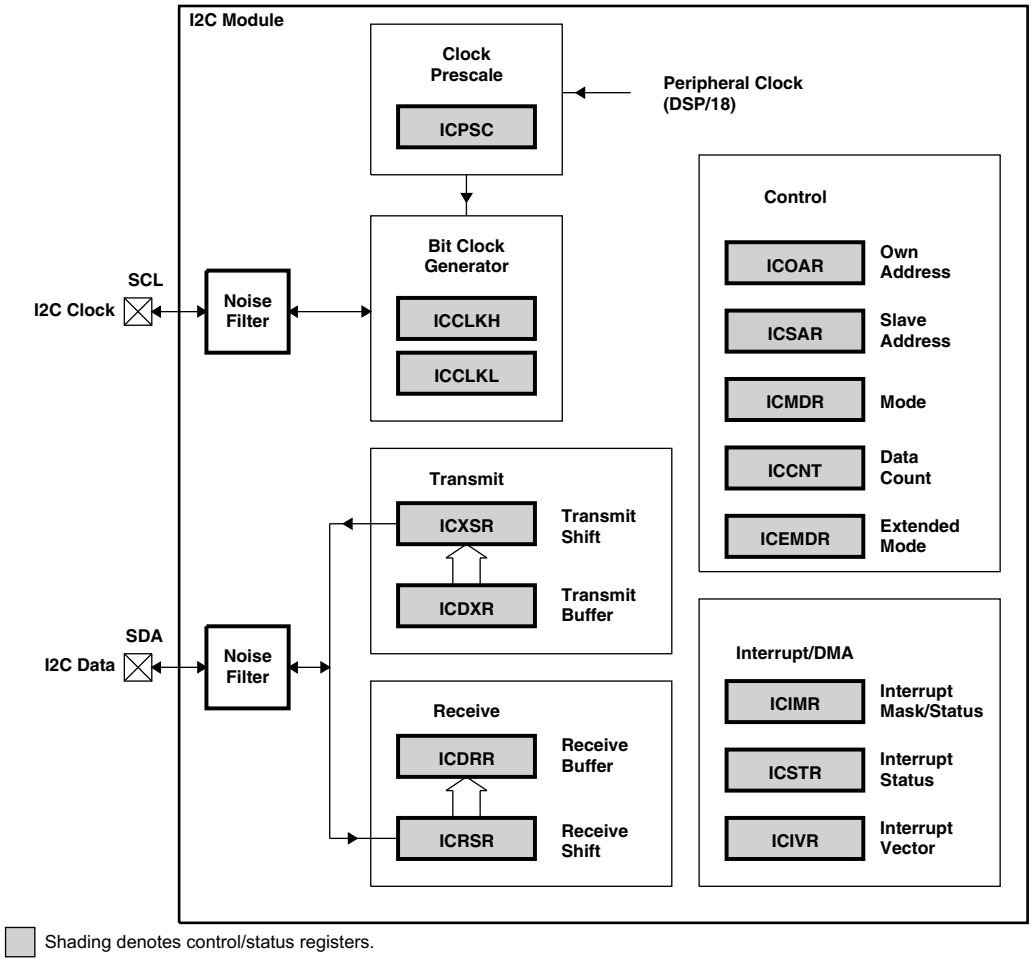

Figure 6-24. I2C Module Block Diagram

For more detailed information on the I2C peripheral, see Section 2.9, *Documentation Support* section of this document for the *TMS320DM643x DMP Peripherals Overview* Reference Guide (literature number SPRU983).

6.12.1 I2C Peripheral Register Description(s)

Table 6-43. I2C Registers

HEX ADDRESS RANGE	ACRONYM	REGISTER NAME
0x1C2 1000	ICOAR	I2C Own Address Register
0x1C2 1004	ICIMR	I2C Interrupt Mask Register
0x1C2 1008	ICSTR	I2C Interrupt Status Register
0x1C2 100C	ICCLKL	I2C Clock Divider Low Register
0x1C2 1010	ICCLKH	I2C Clock Divider High Register
0x1C2 1014	ICCNT	I2C Data Count Register
0x1C2 1018	ICDRR	I2C Data Receive Register
0x1C2 101C	ICSAR	I2C Slave Address Register
0x1C2 1020	ICDXR	I2C Data Transmit Register
0x1C2 1024	ICMDR	I2C Mode Register
0x1C2 1028	ICIVR	I2C Interrupt Vector Register
0x1C2 102C	ICEMDR	I2C Extended Mode Register
0x1C2 1030	ICPSC	I2C Prescaler Register
0x1C2 1034	ICPID1	I2C Peripheral Identification Register 1
0x1C2 1038	ICPID2	I2C Peripheral Identification Register 2

6.12.2 I2C Electrical Data/Timing

6.12.2.1 Inter-Integrated Circuits (I2C) Timing

Table 6-44. Timing Requirements for I2C Timings(1) (see Figure 6-25)

NO.			-7/-6/-5/-4 -L/-Q6/-Q5/-Q4				UNIT
			STANDARD MODE		FAST MODE		
			MIN	MAX	MIN	MAX	
1	$t_{c(SCL)}$	Cycle time, SCL	10		2.5		µs
2	$t_{su(SCLH-SDAL)}$	Setup time, SCL high before SDA low (for a repeated START condition)	4.7		0.6		µs
3	$t_{h(SCLL-SDAL)}$	Hold time, SCL low after SDA low (for a START and a repeated START condition)	4		0.6		µs
4	$t_{w(SCLL)}$	Pulse duration, SCL low	4.7		1.3		µs
5	$t_{w(SCLH)}$	Pulse duration, SCL high	4		0.6		µs
6	$t_{su(SDAV-SCLH)}$	Setup time, SDA valid before SCL high	250		100(2)		ns
7	$t_{h(SDA-SCLL)}$	Hold time, SDA valid after SCL low	0(3)		0(3)	0.9(4)	µs
8	$t_{w(SDAH)}$	Pulse duration, SDA high between STOP and START conditions	4.7		1.3		µs
9	$t_{r(SDA)}$	Rise time, SDA		1000	20 + 0.1C_b(5)	300	ns
10	$t_{r(SCL)}$	Rise time, SCL		1000	20 + 0.1C_b(5)	300	ns
11	$t_{f(SDA)}$	Fall time, SDA		300	20 + 0.1C_b(5)	300	ns
12	$t_{f(SCL)}$	Fall time, SCL		300	20 + 0.1C_b(5)	300	ns
13	$t_{su(SCLH-SDAH)}$	Setup time, SCL high before SDA high (for STOP condition)	4		0.6		µs
14	$t_{w(SP)}$	Pulse duration, spike (must be suppressed)			0	50	ns
15	C_b(5)	Capacitive load for each bus line		400		400	pF

(1) The I2C pins SDA and SCL do not feature fail-safe I/O buffers. These pins could potentially draw current when the device is powered down.
(2) A Fast-mode I^2C-bus™ device can be used in a Standard-mode I^2C-bus system, but the requirement $t_{su(SDA-SCLH)} \geq$ 250 ns must then be met. This will automatically be the case if the device does not stretch the LOW period of the SCL signal. If such a device does stretch the LOW period of the SCL signal, it must output the next data bit to the SDA line t_r max + $t_{su(SDA-SCLH)}$= 1000 + 250 = 1250 ns (according to the Standard-mode I^2C-Bus Specification) before the SCL line is released.
(3) A device must internally provide a hold time of at least 300 ns for the SDA signal (referred to the V_{IHmin} of the SCL signal) to bridge the undefined region of the falling edge of SCL.
(4) The maximum $t_{h(SDA-SCLL)}$ has only to be met if the device does not stretch the low period [$t_{w(SCLL)}$] of the SCL signal.
(5) C_b = total capacitance of one bus line in pF. If mixed with HS-mode devices, faster fall-times are allowed.

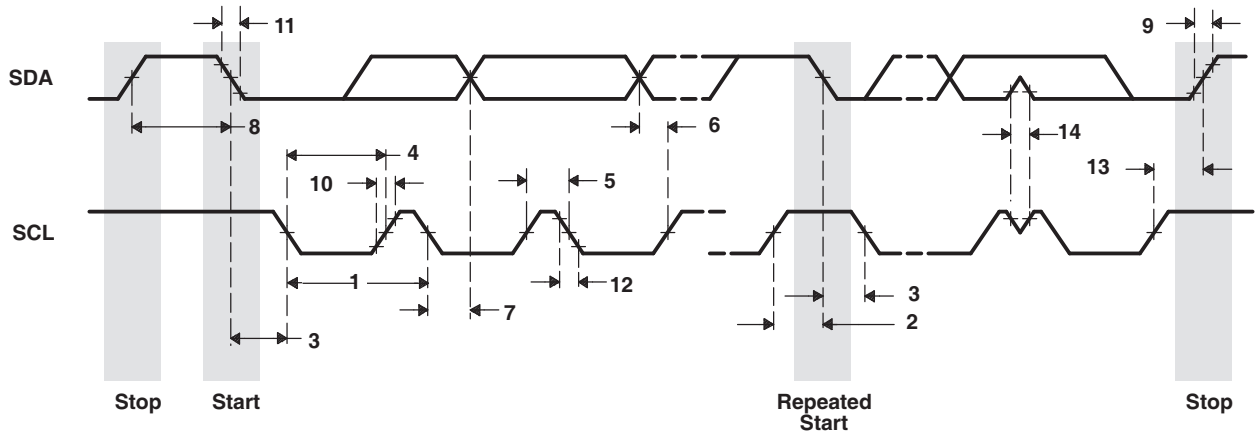

Figure 6-25. I2C Receive Timings

Table 6-45. Switching Characteristics for I2C Timings[(1)] (see Figure 6-26)

NO.	PARAMETER		-7/-6/-5/-4 -L/-Q6/-Q5/-Q4				UNIT
			STANDARD MODE		FAST MODE		
			MIN	MAX	MIN	MAX	
16	$t_{c(SCL)}$	Cycle time, SCL	10		2.5		µs
17	$t_{d(SCLH-SDAL)}$	Delay time, SCL high to SDA low (for a repeated START condition)	4.7		0.6		µs
18	$t_{d(SDAL-SCLL)}$	Delay time, SDA low to SCL low (for a START and a repeated START condition)	4		0.6		µs
19	$t_{w(SCLL)}$	Pulse duration, SCL low	4.7		1.3		µs
20	$t_{w(SCLH)}$	Pulse duration, SCL high	4		0.6		µs
21	$t_{d(SDAV-SCLH)}$	Delay time, SDA valid to SCL high	250		100		ns
22	$t_{v(SCLL-SDAV)}$	Valid time, SDA valid after SCL low	0		0	0.9	µs
23	$t_{w(SDAH)}$	Pulse duration, SDA high between STOP and START conditions	4.7		1.3		µs
24	$t_{r(SDA)}$	Rise time, SDA		1000	$20 + 0.1C_b$[(1)]	300	ns
25	$t_{r(SCL)}$	Rise time, SCL		1000	$20 + 0.1C_b$[(1)]	300	ns
26	$t_{f(SDA)}$	Fall time, SDA		300	$20 + 0.1C_b$[(1)]	300	ns
27	$t_{f(SCL)}$	Fall time, SCL		300	$20 + 0.1C_b$[(1)]	300	ns
28	$t_{d(SCLH-SDAH)}$	Delay time, SCL high to SDA high (for STOP condition)	4		0.6		µs
29	C_p	Capacitance for each I2C pin		10		10	pF

(1) C_b = total capacitance of one bus line in pF. If mixed with HS-mode devices, faster fall-times are allowed.

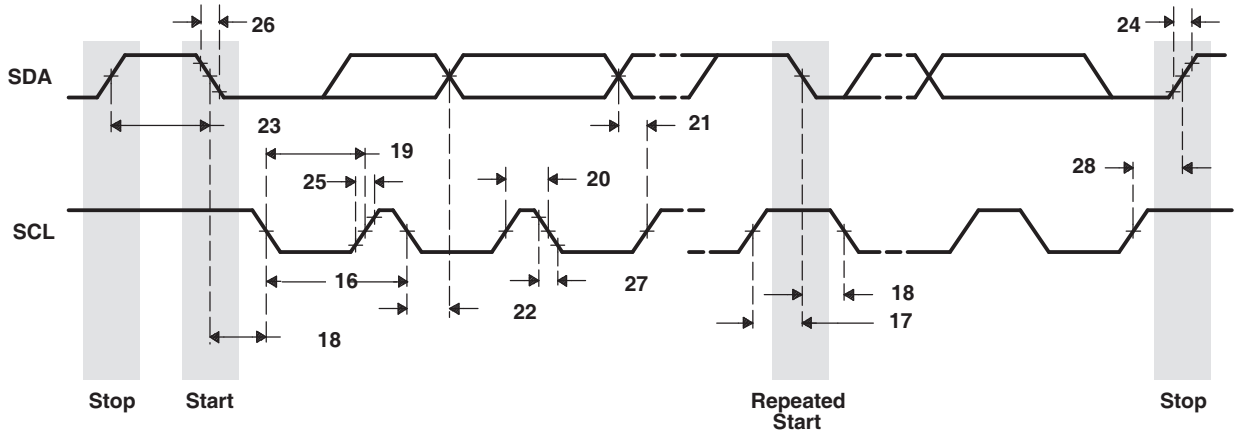

Figure 6-26. I2C Transmit Timings

6.13 Host-Port Interface (HPI) Peripheral

6.13.1 HPI Device-Specific Information

The DM6435 device includes a user-configurable 16-bit Host-port interface (HPI16).

Software handshaking via the HRDY bit of the Host Port Control Register (HPIC) is ***not*** supported on the DM6435.

The DM6435 HPI does ***not*** support the $\overline{\text{HAS}}$ feature. For proper device operation, the $\overline{\text{HAS}}$ pin ***must*** be pulled up via an external resistor.

6.13.2 HPI Peripheral Register Description(s)

Table 6-46. HPI Control Registers

HEX ADDRESS RANGE	ACRONYM	REGISTER NAME	COMMENTS
01C6 7800	PID	Peripheral Identification Register	
01C6 7804	PWREMU_MGMT	HPI power and emulation management register	The CPU has read/write access to the PWREMU_MGMT register.
01C6 7808 - 01C6 7824	-	Reserved	
01C6 7828	-	Reserved	
01C6 782C	-	Reserved	
01C6 7830	HPIC	HPI control register	The Host and the CPU both have read/write access to the HPIC register.
01C6 7834	HPIA (HPIAW)(1)	HPI address register (Write)	The Host has read/write access to the HPIA registers. The CPU has only read access to the HPIA registers.
01C6 7838	HPIA (HPIAR)(1)	HPI address register (Read)	
01C6 780C - 01C6 7FFF	-	Reserved	

(1) There are two 32-bit HPIA registers: HPIAR for read operations and HPIAW for write operations. The HPI can be configured such that HPIAR and HPIAW act as a single 32-bit HPIA (single-HPIA mode) or as two separate 32-bit HPIAs (dual-HPIA mode) from the perspective of the Host. The CPU can access HPIAW and HPIAR independently. For more details about the HPIA registers and their modes, see the *TMS320C643x DMP Host Port Interface (HPI)* User's Guide (literature number SPRU998).

6.13.3 HPI Electrical Data/Timing

Table 6-47. Timing Requirements for Host-Port Interface Cycles[(1)(2)] (see Figure 6-27 and Figure 6-28)

NO.			-7/-6/-5/-4 -L/-Q6/-Q5/-Q4		UNIT
			MIN	MAX	
1	$t_{su(SELV-HSTBL)}$	Setup time, select signals[(3)] valid before $\overline{HSTROBE}$ low	5		ns
2	$t_{h(HSTBL-SELV)}$	Hold time, select signals[(3)] valid after $\overline{HSTROBE}$ low	2		ns
3	$t_{w(HSTBL)}$	Pulse duration, $\overline{HSTROBE}$ active low	15		ns
4	$t_{w(HSTBH)}$	Pulse duration, $\overline{HSTROBE}$ inactive high between consecutive accesses	2M		ns
11	$t_{su(HDV-HSTBH)}$	Setup time, host data valid before $\overline{HSTROBE}$ high	5		ns
12	$t_{h(HSTBH-HDV)}$	Hold time, host data valid after $\overline{HSTROBE}$ high	0		ns
13	$t_{h(HRDYL-HSTBL)}$	Hold time, $\overline{HSTROBE}$ high after $\overline{HRDY}$ low. $\overline{HSTROBE}$ should not be inactivated until $\overline{HRDY}$ is active (low); otherwise, HPI writes will not complete properly.	0		ns

(1) $\overline{HSTROBE}$ refers to the following logical operation on $\overline{HCS}$, $\overline{HDS1}$, and $\overline{HDS2}$: [NOT($\overline{HDS1}$ XOR $\overline{HDS2}$)] OR $\overline{HCS}$.
(2) M = SYSCLK3 period = (CPU clock frequency)/6 in ns. For example, when running parts at 600 MHz, use 10 ns.
(3) Select signals include: HCNTL[1:0], HR/$\overline{W}$ and HHWIL.

Table 6-48. Switching Characteristics for Host-Port Interface Cycles[(1)(2)(3)] (see Figure 6-27 and Figure 6-28)

NO.	PARAMETER			-7/-6/-5/-4 -L/-Q6/-Q5/-Q4 MIN	-7/-6/-5/-4 -L/-Q6/-Q5/-Q4 MAX	UNIT
5	$t_{d(HSTBL-HRDYV)}$	Delay time, $\overline{HSTROBE}$ low to $\overline{HRDY}$ valid	For HPI Write, $\overline{HRDY}$ can go high (*not ready*) for these HPI Write conditions; otherwise, $\overline{HRDY}$ stays low (*ready*): *Case 1*: Back-to-back HPIA writes (can be either first or second half-word) *Case 2*: HPIA write following a PREFETCH command (can be either first or second half-word) *Case 3*: HPID write when FIFO is full or flushing (can be either first or second half-word) *Case 4*: HPIA write and Write FIFO not empty For HPI Read, $\overline{HRDY}$ can go high (*not ready*) for these HPI Read conditions: *Case 1*: HPID read (with auto-increment) and data not in Read FIFO (can only happen to first half-word of HPID access) *Case 2*: First half-word access of HPID Read without auto-increment For HPI Read, $\overline{HRDY}$ stays low (*ready*) for these HPI Read conditions: *Case 1*: HPID read with auto-increment and data is already in Read FIFO (applies to either half-word of HPID access) *Case 2*: HPID read without auto-increment and data is already in Read FIFO (always applies to second half-word of HPID access) *Case 3*: HPIC or HPIA read (applies to either half-word access)		12	ns
6	$t_{en(HSTBL-HD)}$	Enable time, HD driven from $\overline{HSTROBE}$ low		2		ns
7	$t_{d(HRDYL-HDV)}$	Delay time, $\overline{HRDY}$ low to HD valid			0	ns
8	$t_{oh(HSTBH-HDV)}$	Output hold time, HD valid after $\overline{HSTROBE}$ high		1.5		ns
14	$t_{dis(HSTBH-HDV)}$	Disable time, HD high-impedance from $\overline{HSTROBE}$ high			12	ns
15	$t_{d(HSTBL-HDV)}$	Delay time, $\overline{HSTROBE}$ low to HD valid	For HPI Read. Applies to conditions where data is already residing in HPID/FIFO: *Case 1*: HPIC or HPIA read *Case 2*: First half-word of HPID read with auto-increment and data is already in Read FIFO *Case 3*: Second half-word of HPID read with or without auto-increment		15	ns
18	$t_{d(HSTBH-HRDYV)}$	Delay time, $\overline{HSTROBE}$ high to $\overline{HRDY}$ valid	For HPI Write, $\overline{HRDY}$ can go high (*not ready*) for these HPI Write conditions; otherwise, $\overline{HRDY}$ stays low (*ready*): *Case 1*: HPID write when Write FIFO is full (can happen to either half-word) *Case 2*: HPIA write (can happen to either half-word) *Case 3*: HPID write without auto-increment (only happens to second half-word)		12	ns

(1) M = SYSCLK3 period = (CPU clock frequency)/6 in ns. For example, when running parts at 600 MHz, use 10 ns.
(2) $\overline{HSTROBE}$ refers to the following logical operation on $\overline{HCS}$, $\overline{HDS1}$, and $\overline{HDS2}$: [NOT($\overline{HDS1}$ XOR $\overline{HDS2}$)] OR $\overline{HCS}$.
(3) By design, whenever $\overline{HCS}$ is driven inactive (high), HPI will drive $\overline{HRDY}$ active (low).

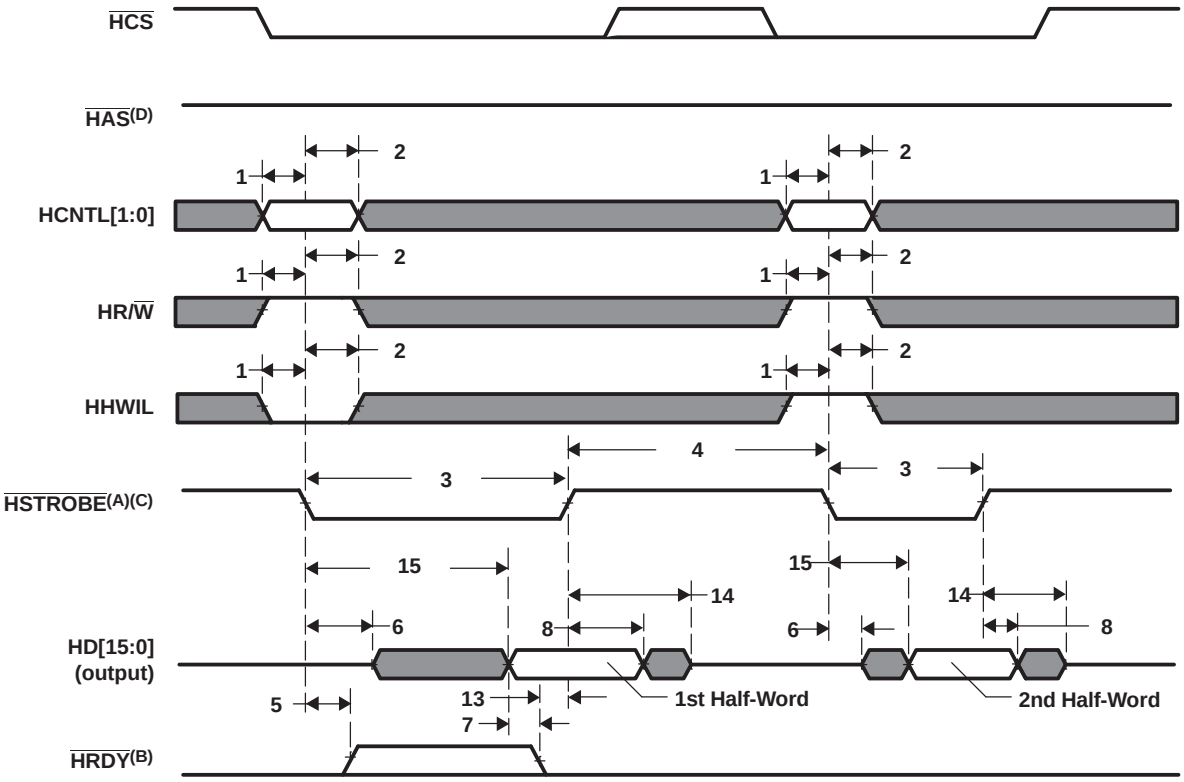

A. HSTROBE refers to the following logical operation on HCS, HDS1, and HDS2: [NOT(HDS1 XOR HDS2)] OR HCS.
B. Depending on the type of write or read operation (HPID without auto-incrementing; HPIA, HPIC, or HPID with auto-incrementing) and the state of the FIFO, transitions on HRDY may or may not occur.
For more detailed information on the HPI peripheral, see the *TMS320DM643x Host Port Interface (HPI)* User's Guide (literature number SPRU998).
C. HCS reflects typical HCS behavior when HSTROBE assertion is caused by HDS1 or HDS2. HCS timing requirements are reflected by parameters for HSTROBE.
D For proper HPI operation, HAS must be pulled up via an external resistor.

Figure 6-27. HPI16 Read Timing (HAS Not Used, Tied High)

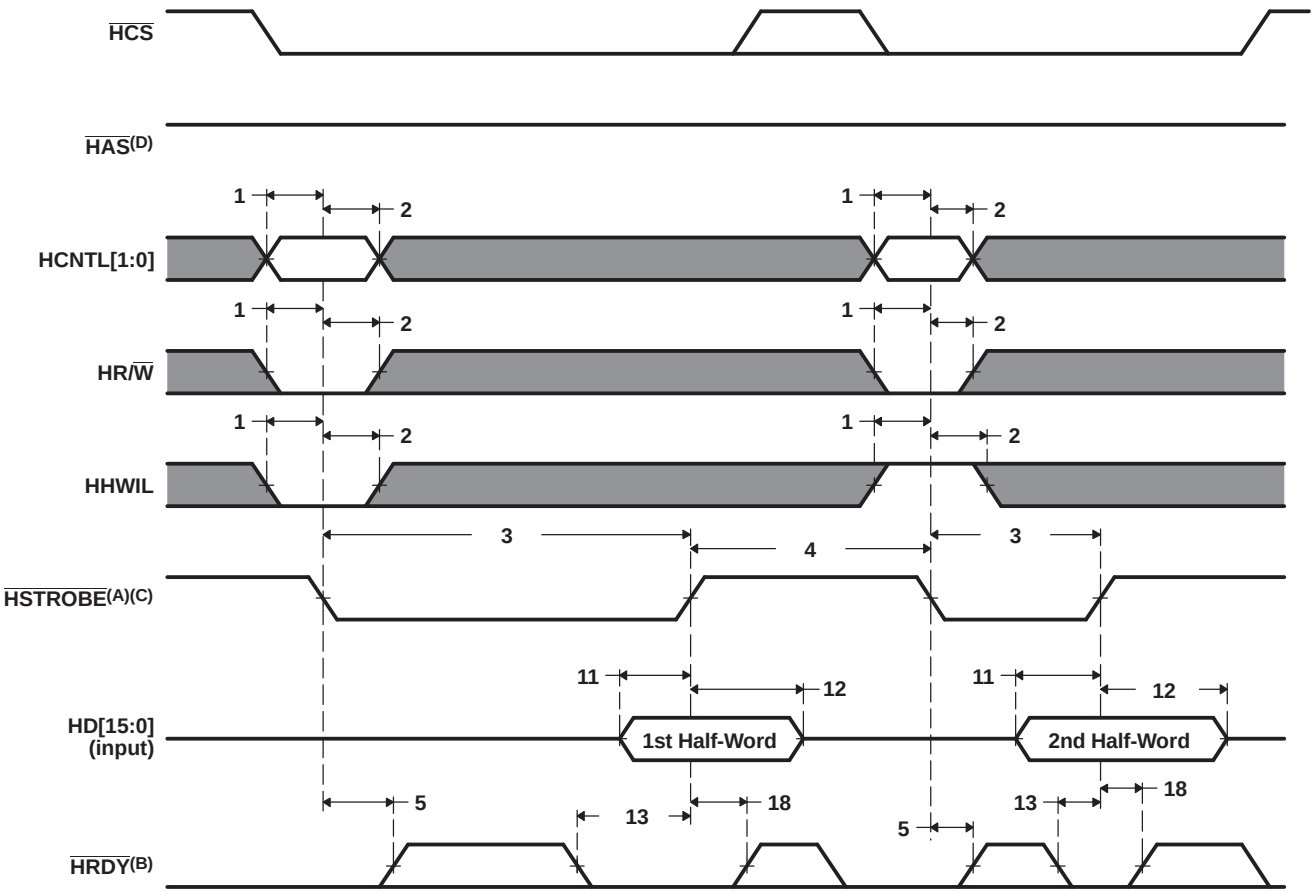

A. HSTROBE refers to the following logical operation on HCS, HDS1, and HDS2: [NOT(HDS1 XOR HDS2)] OR HCS.
B. Depending on the type of write or read operation (HPID without auto-incrementing; HPIA, HPIC, or HPID with auto-incrementing) and the state of the FIFO, transitions on HRDY may or may not occur.
For more detailed information on the HPI peripheral, see the *TMS320DM643x Host Port Interface (HPI)* User's Guide (literature number SPRU998).
C. HCS reflects typical HCS behavior when HSTROBE assertion is caused by HDS1 or HDS2. HCS timing requirements are reflected by parameters for HSTROBE.
D For proper HPI operation, HAS must be pulled up via an external resistor.

Figure 6-28. HPI16 Write Timing (HAS Not Used, Tied High)

6.14 Multichannel Buffered Serial Port (McBSP)

The McBSP provides these functions:

- Full-duplex communication
- Double-buffered data registers, which allow a continuous data stream
- Independent framing and clocking for receive and transmit
- Direct interface to industry-standard codecs, analog interface chips (AICs), and other serially connected analog-to-digital (A/D) and digital-to-analog (D/A) devices
- External shift clock or an internal, programmable frequency shift clock for data transfer

If internal clock source is used, the CLKGDV field of the Sample Rate Generator Register (SRGR) must always be set to a value of 1 or greater.

For more detailed information on the McBSP peripheral, see the *TMS320DM643x DMP Multichannel Buffered Serial Port (McBSP)* User's Guide (literature number SPRU943).

6.14.1 McBSP Peripheral Register Description(s)

Table 6-49. McBSP 0 Registers

HEX ADDRESS RANGE	ACRONYM	REGISTER NAME	COMMENTS
01D0 0000	DRR0	McBSP0 Data Receive Register	The CPU and EDMA3 controller can only read this register; they cannot write to it.
01D0 0004	DXR0	McBSP0 Data Transmit Register	
01D0 0008	SPCR0	McBSP0 Serial Port Control Register	
01D0 000C	RCR0	McBSP0 Receive Control Register	
01D0 0010	XCR0	McBSP0 Transmit Control Register	
01D0 0014	SRGR0	McBSP0 Sample Rate Generator register	
01D0 0018	MCR0	McBSP0 Multichannel Control Register	
01D0 001C	RCERE00	McBSP0 Enhanced Receive Channel Enable Register 0 Partition A/B	
01D0 0020	XCERE00	McBSP0 Enhanced Transmit Channel Enable Register 0 Partition A/B	
01D0 0024	PCR0	McBSP0 Pin Control Register	
01D0 0028	RCERE10	McBSP0 Enhanced Receive Channel Enable Register 1 Partition C/D	
01D0 002C	XCERE10	McBSP0 Enhanced Transmit Channel Enable Register 1 Partition C/D	
01D0 0030	RCERE20	McBSP0 Enhanced Receive Channel Enable Register 2 Partition E/F	
01D0 0034	XCERE20	McBSP0 Enhanced Transmit Channel Enable Register 2 Partition E/F	
01D0 0038	RCERE30	McBSP0 Enhanced Receive Channel Enable Register 3 Partition G/H	
01D0003C	XCERE30	McBSP0 Enhanced Transmit Channel Enable Register 3 Partition G/H	
01D0 0040 - 01D0 07FF	-	Reserved	

6.14.2 McBSP Electrical Data/Timing

6.14.2.1 Multichannel Buffered Serial Port (McBSP) Timing

Table 6-50. Timing Requirements for McBSP[1] (see Figure 6-29)

NO.				-7/-6/-5/-4 -L/-Q6/-Q5/-Q4 MIN	MAX	UNIT
2	$t_{c(CKRX)}$	Cycle time, CLKR/X	CLKR/X ext	2P[2][3]		ns
3	$t_{w(CKRX)}$	Pulse duration, CLKR/X high or CLKR/X low	CLKR/X ext	P - 1[4]		ns
5	$t_{su(FRH-CKRL)}$	Setup time, external FSR high before CLKR low	CLKR int	14		ns
			CLKR ext	4		
6	$t_{h(CKRL-FRH)}$	Hold time, external FSR high after CLKR low	CLKR int	6		ns
			CLKR ext	4		
7	$t_{su(DRV-CKRL)}$	Setup time, DR valid before CLKR low	CLKR int	14		ns
			CLKR ext	4		
8	$t_{h(CKRL-DRV)}$	Hold time, DR valid after CLKR low	CLKR int	3		ns
			CLKR ext	3.5		
10	$t_{su(FXH-CKXL)}$	Setup time, external FSX high before CLKX low	CLKX int	14		ns
			CLKX ext	4		
11	$t_{h(CKXL-FXH)}$	Hold time, external FSX high after CLKX low	CLKX int	6		ns
			CLKX ext	3		

(1) CLKRP = CLKXP = FSRP = FSXP = 0. If polarity of any of the signals is inverted, then the timing references of that signal are also inverted.
(2) P = SYSCLK3 period in ns. For example, when running parts at 600 MHz, use P = 10 ns.
(3) Use whichever value is greater. Minimum CLKR/X cycle times *must* be met, even when CLKR/X is generated by an internal clock source. The minimum CLKR/X cycle times are based on internal logic speed; the maximum usable speed may be lower due to EDMA limitations and AC timing requirements.
(4) This parameter applies to the maximum McBSP frequency. Operate serial clocks (CLKR/X) in the reasonable range of 40/60 duty cycle.

Table 6-51. Switching Characteristics Over Recommended Operating Conditions for McBSP[1][2] (see Figure 6-29)

NO.	PARAMETER			-7/-6/-5/-4 -L/-Q6/-Q5/-Q4 MIN	-7/-6/-5/-4 -L/-Q6/-Q5/-Q4 MAX	UNIT
1	$t_{d(CKSH-CKRXH)}$	Delay time, CLKS high to CLKR/X high for internal CLKR/X generated from CLKS input		3	10	ns
2	$t_{c(CKRX)}$	Cycle time, CLKR/X	CLKR/X int	2P[3][4][5]		ns
3	$t_{w(CKRX)}$	Pulse duration, CLKR/X high or CLKR/X low	CLKR/X int	C - 2[6]	C + 2[6]	ns
4	$t_{d(CKRH-FRV)}$	Delay time, CLKR high to internal FSR valid	CLKR int	-4	5.5	ns
9	$t_{d(CKXH-FXV)}$	Delay time, CLKX high to internal FSX valid	CLKX int	-4	5.5	ns
			CLKX ext	2.5	14.5	
12	$t_{dis(CKXH-DXHZ)}$	Disable time, DX high impedance following last data bit from CLKX high	CLKX int	-5.5	7.5	ns
			CLKX ext	-2.1	16	
13	$t_{d(CKXH-DXV)}$	Delay time, CLKX high to DX valid	CLKX int	-4 + D1[7]	5.5 + D2[7]	ns
			CLKX ext	2.5 + D1[7]	14.5 + D2[7]	
14	$t_{d(FXH-DXV)}$	Delay time, FSX high to DX valid ONLY applies when in data delay 0 (XDATDLY = 00b) mode	FSX int	-4[8]	5[8]	ns
			FSX ext	1[8]	14.5[8]	

(1) CLKRP = CLKXP = FSRP = FSXP = 0. If polarity of any of the signals is inverted, then the timing references of that signal are also inverted.
(2) Minimum delay times also represent minimum output hold times.
(3) Minimum CLKR/X cycle times must be met, even when CLKR/X is generated by an internal clock source. Minimum CLKR/X cycle times are based on internal logic speed; the maximum usable speed may be lower due to EDMA limitations and AC timing requirements.
(4) P = SYSCLK3 period in ns. For example, when running parts at 600 MHz, use P = 10 ns.
(5) Use whichever value is greater.
(6) C = H or L
S = sample rate generator input clock = P if CLKSM = 1 (P = SYSCLK3 period)
S = sample rate generator input clock = P_clks if CLKSM = 0 (P_clks = CLKS period)
H = CLKX high pulse width = (CLKGDV/2 + 1) * S if CLKGDV is even
H = (CLKGDV + 1)/2 * S if CLKGDV is odd
L = CLKX low pulse width = (CLKGDV/2) * S if CLKGDV is even
L = (CLKGDV + 1)/2 * S if CLKGDV is odd
CLKGDV should be set appropriately to ensure the McBSP bit rate does not exceed the maximum limit (see (4) above).
(7) Extra delay from CLKX high to DX valid **applies *only* to the first data bit of a device**, if and only if DXENA = 1 in SPCR.
if DXENA = 0, then D1 = D2 = 0
if DXENA = 1, then D1 = 6P, D2 = 12P
(8) Extra delay from FSX high to DX valid **applies *only* to the first data bit of a device**, if and only if DXENA = 1 in SPCR.
if DXENA = 0, then D1 = D2 = 0
if DXENA = 1, then D1 = 6P, D2 = 12P

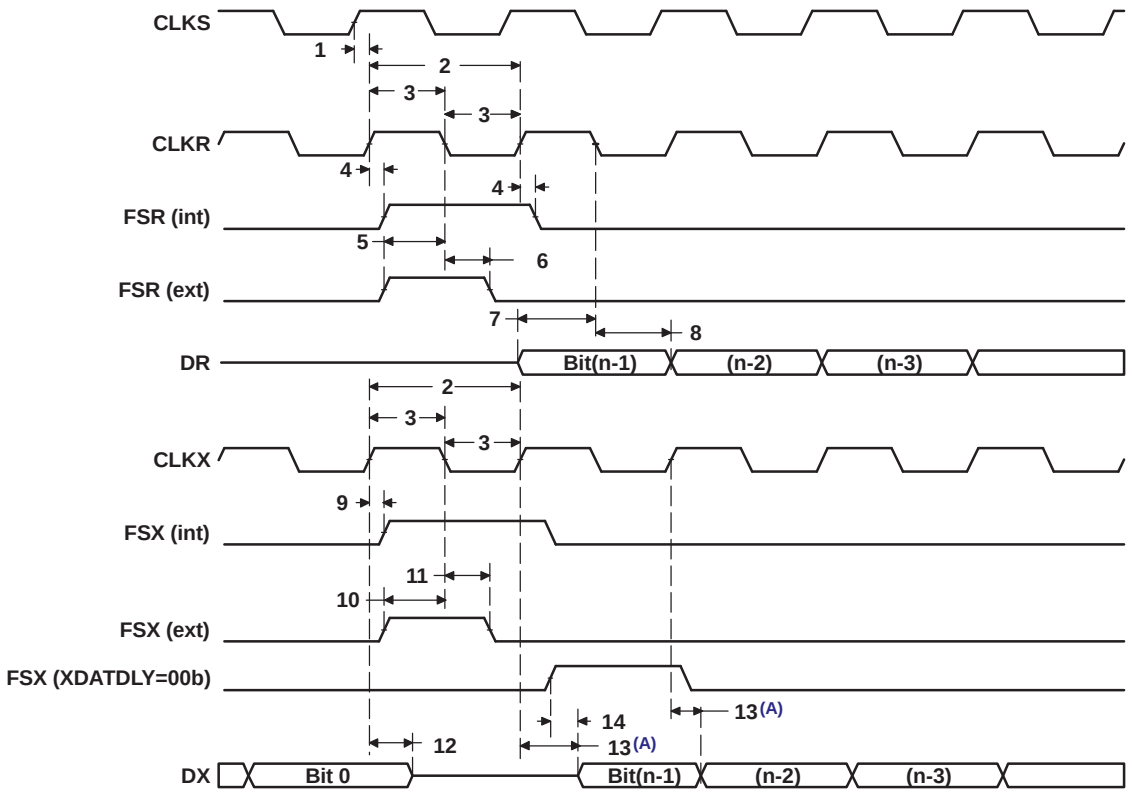

A. Parameter No. 13 applies to the first data bit *only* when XDATDLY ≠ 0.

Figure 6-29. McBSP Timing(B)

Table 6-52. Timing Requirements for FSR When GSYNC = 1 (see Figure 6-30)

NO.			-7/-6/-5/-4 -L/-Q6/-Q5/-Q4		UNIT
			MIN	MAX	
1	$t_{su(FRH-CKSH)}$	Setup time, FSR high before CLKS high	4		ns
2	$t_{h(CKSH-FRH)}$	Hold time, FSR high after CLKS high	4		ns

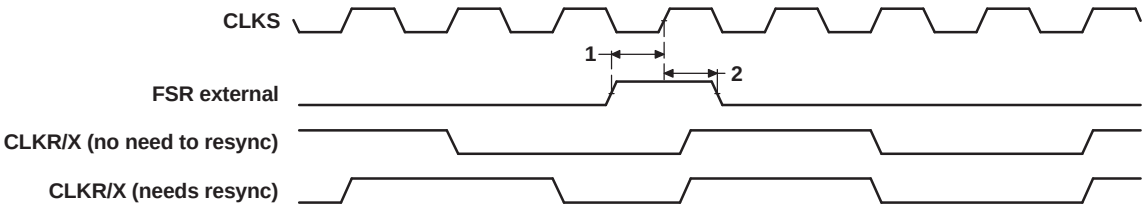

Figure 6-30. FSR Timing When GSYNC = 1

Table 6-53. Timing Requirements for McBSP as SPI Master or Slave: CLKSTP = 10b, CLKXP = 0[(1)(2)] (see Figure 6-31)

NO.			-7/-6/-5/-4 -L/-Q6/-Q5/-Q4				UNIT
			MASTER		SLAVE		
			MIN	MAX	MIN	MAX	
4	$t_{su(DRV-CKXL)}$	Setup time, DR valid before CLKX low	14		2 - 3P		ns
5	$t_{h(CKXL-DRV)}$	Hold time, DR valid after CLKX low	4		5 + 6P		ns

(1) P = SYSCLK3 period in ns. For example, when running parts at 600 MHz, use P = 10 ns.
(2) For all SPI Slave modes, the rate of the internal clock CLKG must be at least 8 times faster than that of the SPI data rate. User should program sample rate generator to achieve maximum CLKG by setting CLKSM = CLKGDV = 1.

Table 6-54. Switching Characteristics Over Recommended Operating Conditions for McBSP as SPI Master or Slave: CLKSTP = 10b, CLKXP = 0[(1)(2)] (see Figure 6-31)

NO.	PARAMETER		-7/-6/-5/-4 -L/-Q6/-Q5/-Q4				UNIT
			MASTER[(3)]		SLAVE		
			MIN	MAX	MIN	MAX	
1	$t_{h(CKXL-FXL)}$	Hold time, FSX low after CLKX low[(4)]	T - 4	T + 5.5			ns
2	$t_{d(FXL-CKXH)}$	Delay time, FSX low to CLKX high[(5)]	L - 4	L + 4			ns
3	$t_{d(CKXH-DXV)}$	Delay time, CLKX high to DX valid	-4	5.5	3P + 2.8	5P + 17	ns
6	$t_{dis(CKXL-DXHZ)}$	Disable time, DX high impedance following last data bit from CLKX low	L - 6	L + 7.5			ns
7	$t_{dis(FXH-DXHZ)}$	Disable time, DX high impedance following last data bit from FSX high			P + 3	3P + 17	ns
8	$t_{d(FXL-DXV)}$	Delay time, FSX low to DX valid			2P + 1.8	4P + 17	ns

(1) P = SYSCLK3 period in ns. For example, when running parts at 600 MHz, use P = 10 ns.
(2) For all SPI Slave modes, the rate of the internal clock CLKG must be at least 8 times faster than that of the SPI data rate. User should program sample rate generator to achieve maximum CLKG by setting CLKSM = CLKGDV = 1.
(3) S = Sample rate generator input clock = 2P if CLKSM = 1 (P = SYSCLK3 period)
S = Sample rate generator input clock = 2P_clks if CLKSM = 0 (P_clks = CLKS period)
T = CLKX period = (1 + CLKGDV) * S
H = CLKX high pulse width = (CLKGDV/2 + 1) * S if CLKGDV is even
H = (CLKGDV + 1)/2 * S if CLKGDV is odd
L = CLKX low pulse width = (CLKGDV/2) * S if CLKGDV is even
L = (CLKGDV + 1)/2 * S if CLKGDV is odd
(4) FSRP = FSXP = 1. As a SPI Master, FSX is inverted to provide active-low slave-enable output. As a Slave, the active-low signal input on FSX and FSR is inverted before being used internally.
CLKXM = FSXM = 1, CLKRM = FSRM = 0 for Master McBSP
CLKXM = CLKRM = FSXM = FSRM = 0 for Slave McBSP
(5) FSX should be low before the rising edge of clock to enable Slave devices and then begin a SPI transfer at the rising edge of the Master clock (CLKX).

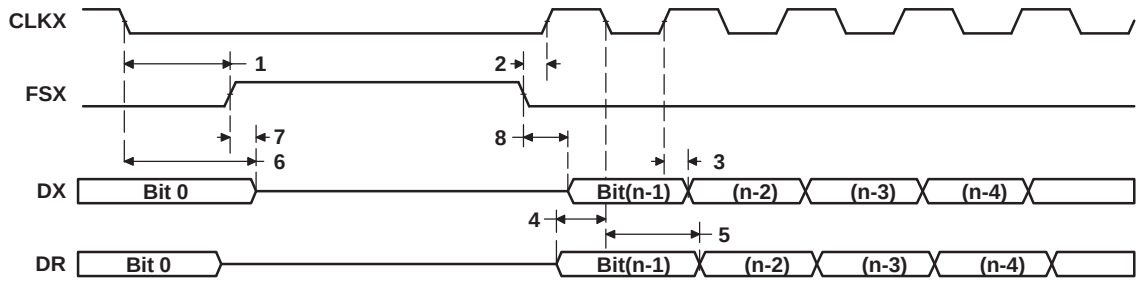

Figure 6-31. McBSP Timing as SPI Master or Slave: CLKSTP = 10b, CLKXP = 0

Table 6-55. Timing Requirements for McBSP as SPI Master or Slave: CLKSTP = 11b, CLKXP = 0[(1)(2)] (see Figure 6-32)

NO.			-7/-6/-5/-4 -L/-Q6/-Q5/-Q4				UNIT
			MASTER		SLAVE		
			MIN	MAX	MIN	MAX	
4	$t_{su(DRV-CKXH)}$	Setup time, DR valid before CLKX high	14		2 - 3P		ns
5	$t_{h(CKXH-DRV)}$	Hold time, DR valid after CLKX high	4		5 + 6P		ns

(1) P = SYSCLK3 period in ns. For example, when running parts at 600 MHz, use P = 10 ns.
(2) For all SPI Slave modes, the rate of the internal clock CLKG must be at least 8 times faster than that of the SPI data rate. User should program sample rate generator to achieve maximum CLKG by setting CLKSM = CLKGDV = 1.

Table 6-56. Switching Characteristics Over Recommended Operating Conditions for McBSP as SPI Master or Slave: CLKSTP = 11b, CLKXP = 0[(1)(2)] (see Figure 6-32)

NO.	PARAMETER		-7/-6/-5/-4 -L/-Q6/-Q5/-Q4				UNIT
			MASTER[(3)]		SLAVE		
			MIN	MAX	MIN	MAX	
1	$t_{h(CKXL-FXL)}$	Hold time, FSX low after CLKX low[(4)]	L - 4	L + 5.5			ns
2	$t_{d(FXL-CKXH)}$	Delay time, FSX low to CLKX high[(5)]	T - 4	T + 4			ns
3	$t_{d(CKXL-DXV)}$	Delay time, CLKX low to DX valid	-4	5.5	3P + 2.8	5P + 17	ns
6	$t_{dis(CKXL-DXHZ)}$	Disable time, DX high impedance following last data bit from CLKX low	-6	7.5	3P + 2	5P + 17	ns
7	$t_{d(FXL-DXV)}$	Delay time, FSX low to DX valid	H - 4	H + 5.5	2P + 2	4P + 17	ns

(1) P = SYSCLK3 period in ns. For example, when running parts at 600 MHz, use P = 10 ns.
(2) For all SPI Slave modes, the rate of the internal clock CLKG must be at least 8 times faster than that of the SPI data rate. User should program sample rate generator to achieve maximum CLKG by setting CLKSM = CLKGDV = 1.
(3) S = Sample rate generator input clock = 2P if CLKSM = 1 (P = SYSCLK3 period)
S = Sample rate generator input clock = 2P_clks if CLKSM = 0 (P_clks = CLKS period)
T = CLKX period = (1 + CLKGDV) * S
H = CLKX high pulse width = (CLKGDV/2 + 1) * S if CLKGDV is even
H = (CLKGDV + 1)/2 * S if CLKGDV is odd
L = CLKX low pulse width = (CLKGDV/2) * S if CLKGDV is even
L = (CLKGDV + 1)/2 * S if CLKGDV is odd
(4) FSRP = FSXP = 1. As a SPI Master, FSX is inverted to provide active-low slave-enable output. As a Slave, the active-low signal input on FSX and FSR is inverted before being used internally.
CLKXM = FSXM = 1, CLKRM = FSRM = 0 for Master McBSP
CLKXM = CLKRM = FSXM = FSRM = 0 for Slave McBSP
(5) FSX should be low before the rising edge of clock to enable Slave devices and then begin a SPI transfer at the rising edge of the Master clock (CLKX).

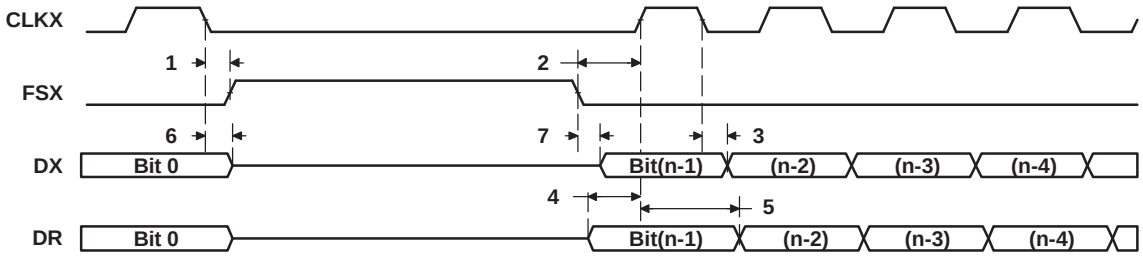

Figure 6-32. McBSP Timing as SPI Master or Slave: CLKSTP = 11b, CLKXP = 0

Table 6-57. Timing Requirements for McBSP as SPI Master or Slave: CLKSTP = 10b, CLKXP = 1[(1)(2)] (see Figure 6-33)

NO.			-7/-6/-5/-4 -L/-Q6/-Q5/-Q4				UNIT
			MASTER		SLAVE		
			MIN	MAX	MIN	MAX	
4	$t_{su(DRV-CKXH)}$	Setup time, DR valid before CLKX high	14		2 - 3P		ns
5	$t_{h(CKXH-DRV)}$	Hold time, DR valid after CLKX high	4		5 + 6P		ns

(1) P = SYSCLK3 period in ns. For example, when running parts at 600 MHz, use P = 10 ns.
(2) For all SPI Slave modes, the rate of the internal clock CLKG must be at least 8 times faster than that of the SPI data rate. User should program sample rate generator to achieve maximum CLKG by setting CLKSM = CLKGDV = 1.

Table 6-58. Switching Characteristics Over Recommended Operating Conditions for McBSP as SPI Master or Slave: CLKSTP = 10b, CLKXP = 1[(1)(2)] (see Figure 6-33)

NO.	PARAMETER		-7/-6/-5/-4 -L/-Q6/-Q5/-Q4				UNIT
			MASTER[(3)]		SLAVE		
			MIN	MAX	MIN	MAX	
1	$t_{h(CKXH-FXL)}$	Hold time, FSX low after CLKX high[(4)]	T - 4	T + 5.5			ns
2	$t_{d(FXL-CKXL)}$	Delay time, FSX low to CLKX low[(5)]	H - 4	H + 4			ns
3	$t_{d(CKXL-DXV)}$	Delay time, CLKX low to DX valid	-4	5.5	3P + 2.8	5P + 17	ns
6	$t_{dis(CKXH-DXHZ)}$	Disable time, DX high impedance following last data bit from CLKX high	H - 6	H + 7.5			ns
7	$t_{dis(FXH-DXHZ)}$	Disable time, DX high impedance following last data bit from FSX high			P + 3	3P + 17	ns
8	$t_{d(FXL-DXV)}$	Delay time, FSX low to DX valid			2P + 2	4P + 17	ns

(1) P = SYSCLK3 period in ns. For example, when running parts at 600 MHz, use P = 10 ns.
(2) For all SPI Slave modes, the rate of the internal clock CLKG must be at least 8 times faster than that of the SPI data rate. User should program sample rate generator to achieve maximum CLKG by setting CLKSM = CLKGDV = 1.
(3) S = Sample rate generator input clock = 2P if CLKSM = 1 (P = SYSCLK3 period)
S = Sample rate generator input clock = 2P_clks if CLKSM = 0 (P_clks = CLKS period)
T = CLKX period = (1 + CLKGDV) * S
H = CLKX high pulse width = (CLKGDV/2 + 1) * S if CLKGDV is even
H = (CLKGDV + 1)/2 * S if CLKGDV is odd
L = CLKX low pulse width = (CLKGDV/2) * S if CLKGDV is even
L = (CLKGDV + 1)/2 * S if CLKGDV is odd
(4) FSRP = FSXP = 1. As a SPI Master, FSX is inverted to provide active-low slave-enable output. As a Slave, the active-low signal input on FSX and FSR is inverted before being used internally.
CLKXM = FSXM = 1, CLKRM = FSRM = 0 for Master McBSP
CLKXM = CLKRM = FSXM = FSRM = 0 for Slave McBSP
(5) FSX should be low before the rising edge of clock to enable Slave devices and then begin a SPI transfer at the rising edge of the Master clock (CLKX).

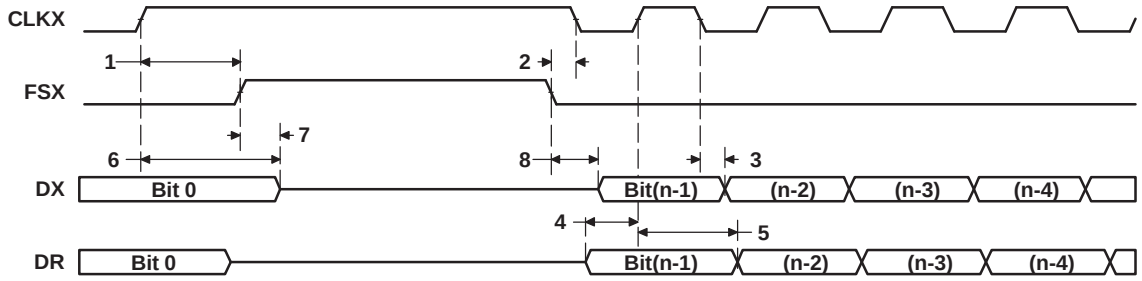

Figure 6-33. McBSP Timing as SPI Master or Slave: CLKSTP = 10b, CLKXP = 1

Table 6-59. Timing Requirements for McBSP as SPI Master or Slave: CLKSTP = 11b, CLKXP = 1[(1)(2)] (see Figure 6-34)

NO.			-7/-6/-5/-4 -L/-Q6/-Q5/-Q4				UNIT
			MASTER		SLAVE		
			MIN	MAX	MIN	MAX	
4	$t_{su(DRV-CKXH)}$	Setup time, DR valid before CLKX high	14		2 - 3P		ns
5	$t_{h(CKXH-DRV)}$	Hold time, DR valid after CLKX high	4		5+ 6P		ns

(1) P = SYSCLK3 period in ns. For example, when running parts at 600 MHz, use P = 10 ns.
(2) For all SPI Slave modes, the rate of the internal clock CLKG must be at least 8 times faster than that of the SPI data rate. User should program sample rate generator to achieve maximum CLKG by setting CLKSM = CLKGDV = 1.

Table 6-60. Switching Characteristics Over Recommended Operating Conditions for McBSP as SPI Master or Slave: CLKSTP = 11b, CLKXP = 1[(1)(2)] (see Figure 6-34)

NO.	PARAMETER		-7/-6/-5/-4 -L/-Q6/-Q5/-Q4				UNIT
			MASTER[(3)]		SLAVE		
			MIN	MAX	MIN	MAX	
1	$t_{h(CKXH-FXL)}$	Hold time, FSX low after CLKX high[(4)]	H - 4	H + 5.5			ns
2	$t_{d(FXL-CKXL)}$	Delay time, FSX low to CLKX low[(5)]	T - 4	T + 4			ns
3	$t_{d(CKXH-DXV)}$	Delay time, CLKX high to DX valid	-4	5.5	3P + 2.8	5P + 17	ns
6	$t_{dis(CKXH-DXHZ)}$	Disable time, DX high impedance following last data bit from CLKX high	-6	7.5	3P + 2	5P + 17	ns
7	$t_{d(FXL-DXV)}$	Delay time, FSX low to DX valid	L - 4	L+ 5.5	2P + 2	4P + 17	ns

(1) P = SYSCLK3 period in ns. For example, when running parts at 600 MHz, use P = 10 ns.
(2) For all SPI Slave modes, the rate of the internal clock CLKG must be at least 8 times faster than that of the SPI data rate. User should program sample rate generator to achieve maximum CLKG by setting CLKSM = CLKGDV = 1.
(3) S = Sample rate generator input clock = 2P if CLKSM = 1 (P = SYSCLK3 period)
S = Sample rate generator input clock = 2P_clks if CLKSM = 0 (P_clks = CLKS period)
T = CLKX period = (1 + CLKGDV) * S
H = CLKX high pulse width = (CLKGDV/2 + 1) * S if CLKGDV is even
H = (CLKGDV + 1)/2 * S if CLKGDV is odd
L = CLKX low pulse width = (CLKGDV/2) * S if CLKGDV is even
L = (CLKGDV + 1)/2 * S if CLKGDV is odd
(4) FSRP = FSXP = 1. As a SPI Master, FSX is inverted to provide active-low slave-enable output. As a Slave, the active-low signal input on FSX and FSR is inverted before being used internally.
CLKXM = FSXM = 1, CLKRM = FSRM = 0 for Master McBSP
CLKXM = CLKRM = FSXM = FSRM = 0 for Slave McBSP
(5) FSX should be low before the rising edge of clock to enable Slave devices and then begin a SPI transfer at the rising edge of the Master clock (CLKX).

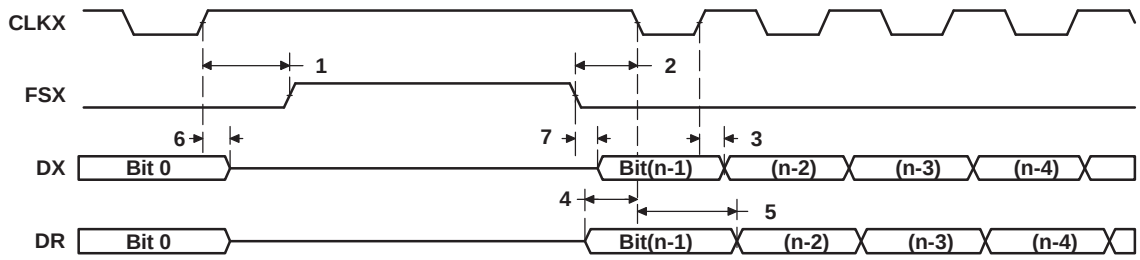

Figure 6-34. McBSP Timing as SPI Master or Slave: CLKSTP = 11b, CLKXP = 1

6.15 Multichannel Audio Serial Port (McASP0) Peripheral

The McASP functions as a general-purpose audio serial port optimized for the needs of multichannel audio applications. The McASP is useful for time-division multiplexed (TDM) stream, Inter-Integrated Sound (I2S) protocols, and intercomponent digital audio interface transmission (DIT).

6.15.1 McASP0 Device-Specific Information

The DM6435 device includes one multichannel audio serial port (McASP) interface peripheral (McASP0). The McASP0 is a serial port optimized for the needs of multichannel audio applications.

The McASP0 consists of a transmit and receive section. These sections can operate completely independently with different data formats, separate master clocks, bit clocks, and frame syncs or alternatively, the transmit and receive sections may be synchronized. The McASP module also includes a pool of 16 shift registers that may be configured to operate as either transmit data or receive data.

The transmit section of the McASP can transmit data in either a time-division-multiplexed (TDM) synchronous serial format or in a digital audio interface (DIT) format where the bit stream is encoded for S/PDIF, AES-3, IEC-60958, CP-430 transmission. The receive section of the McASP supports the TDM synchronous serial format.

The McASP can support one transmit data format (either a TDM format or DIT format) and one receive format at a time. All transmit shift registers use the same format and all receive shift registers use the same format. However, the transmit and receive formats need not be the same.

Both the transmit and receive sections of the McASP also support burst mode which is useful for non-audio data (for example, passing control information between two DSPs).

The McASP peripheral has additional capability for flexible clock generation, and error detection/handling, as well as error management.

For more detailed information on and the functionality of the McASP0 peripheral, see the *TMS320DM643x DMP Multichannel Audio Serial Port (McASP)* User's Guide (literature number SPRU980).

6.15.1.1 McASP Block Diagram

Figure 6-35 illustrates the major blocks along with external signals of the TMS320DM6435 McASP0 peripheral; and shows the 4 serial data [AXR] pins.

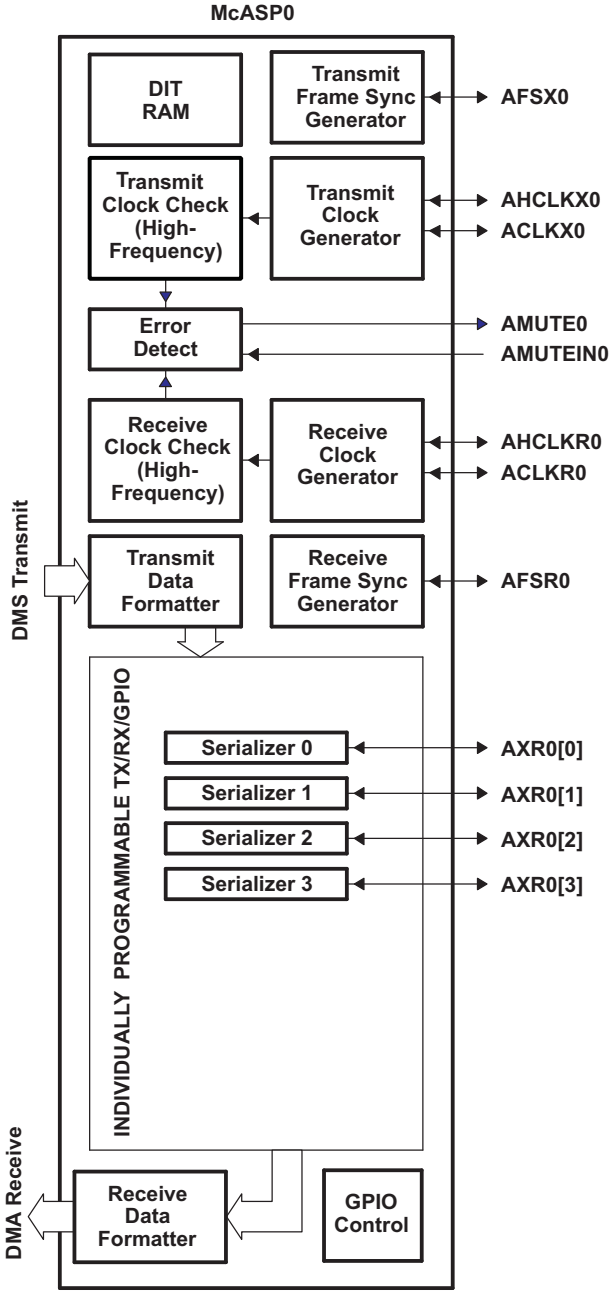

Figure 6-35. McASP0 Configuration

6.15.1.2 McASP0 Peripheral Register Description(s)

Table 6-61. McASP0 Control Registers

HEX ADDRESS RANGE	ACRONYM	REGISTER NAME
01D0 1000	PID	Peripheral Identification register [Register value: 0x0010 0101]
01D0 1004	–	Reserved
01D0 1008	–	Reserved
01D0 100C	–	Reserved
01D0 1010	PFUNC	Pin function register
01D0 1014	PDIR	Pin direction register
01D0 1018	–	Reserved
01D0 101C	–	Reserved
01D0 1020	–	Reserved
01D0 1024 – 01D0 1040	–	Reserved
01D0 1044	GBLCTL	Global control register
01D0 1048	AMUTE	Mute control register
01D0 104C	DLBCTL	Digital Loop-back control register
01D0 1050	DITCTL	DIT mode control register
01D0 1054 – 01D0 105C	–	Reserved
01D0 1060	RGBLCTL	Alias of GBLCTL containing only Receiver Reset bits, allows transmit to be reset independently from receive.
01D0 1064	RMASK	Receiver format UNIT bit mask register
01D0 1068	RFMT	Receive bit stream format register
01D0 106C	AFSRCTL	Receive frame sync control register
01D0 1070	ACLKRCTL	Receive clock control register
01D0 1074	AHCLKRCTL	High-frequency receive clock control register
01D0 1078	RTDM	Receive TDM slot 0–31 register
01D0 107C	RINTCTL	Receiver interrupt control register
01D0 1080	RSTAT	Status register – Receiver
01D0 1084	RSLOT	Current receive TDM slot register
01D0 1088	RCLKCHK	Receiver clock check control register
01D0 108C – 01D0 109C	–	Reserved
01D0 10A0	XGBLCTL	Alias of GBLCTL containing only Transmitter Reset bits, allows transmit to be reset independently from receive.
01D0 10A4	XMASK	Transmit format UNIT bit mask register
01D0 10A8	XFMT	Transmit bit stream format register
01D0 10AC	AFSXCTL	Transmit frame sync control register
01D0 10B0	ACLKXCTL	Transmit clock control register
01D0 10B4	AHCLKXCTL	High-frequency Transmit clock control register
01D0 10B8	XTDM	Transmit TDM slot 0–31 register
01D0 10BC	XINTCTL	Transmit interrupt control register
01D0 10C0	XSTAT	Status register – Transmitter
01D0 10C4	XSLOT	Current transmit TDM slot
01D0 10C8	XCLKCHK	Transmit clock check control register

Table 6-61. McASP0 Control Registers (continued)

HEX ADDRESS RANGE	ACRONYM	REGISTER NAME
01D0 10CC – 01D0 10FC	–	Reserved
01D0 1100	DITCSRA0	Left (even TDM slot) channel status register file
01D0 1104	DITCSRA1	Left (even TDM slot) channel status register file
01D0 1108	DITCSRA2	Left (even TDM slot) channel status register file
01D0 110C	DITCSRA3	Left (even TDM slot) channel status register file
01D0 1110	DITCSRA4	Left (even TDM slot) channel status register file
01D0 1114	DITCSRA5	Left (even TDM slot) channel status register file
01D0 1118	DITCSRB0	Right (odd TDM slot) channel status register file
01D0 111C	DITCSRB1	Right (odd TDM slot) channel status register file
01D0 1120	DITCSRB2	Right (odd TDM slot) channel status register file
01D0 1124	DITCSRB3	Right (odd TDM slot) channel status register file
01D0 1128	DITCSRB4	Right (odd TDM slot) channel status register file
01D0 112C	DITCSRB5	Right (odd TDM slot) channel status register file
01D0 1130	DITUDRA0	Left (even TDM slot) user data register file
01D0 1134	DITUDRA1	Left (even TDM slot) user data register file
01D0 1138	DITUDRA2	Left (even TDM slot) user data register file
01D0 113C	DITUDRA3	Left (even TDM slot) user data register file
01D0 1140	DITUDRA4	Left (even TDM slot) user data register file
01D0 1144	DITUDRA5	Left (even TDM slot) user data register file
01D0 1148	DITUDRB0	Right (odd TDM slot) user data register file
01D0 114C	DITUDRB1	Right (odd TDM slot) user data register file
01D0 1150	DITUDRB2	Right (odd TDM slot) user data register file
01D0 1154	DITUDRB3	Right (odd TDM slot) user data register file
01D0 1158	DITUDRB4	Right (odd TDM slot) user data register file
01D0 115C	DITUDRB5	Right (odd TDM slot) user data register file
01D0 1160 – 01D0 117C	–	Reserved
01D0 1180	SRCTL0	Serializer 0 control register
01D0 1184	SRCTL1	Serializer 1 control register
01D0 1188	SRCTL2	Serializer 2 control register
01D0 118C	SRCTL3	Serializer 3 control register
01D0 1190 – 01D0 11FC	–	Reserved
01D0 1200	XBUF0	Transmit Buffer for Serializer 0
01D0 1204	XBUF1	Transmit Buffer for Serializer 1
01D0 1208	XBUF2	Transmit Buffer for Serializer 2
01D0 120C	XBUF3	Transmit Buffer for Serializer 3
01D0 1210 – 01D0 127C	–	Reserved
01D0 1280	RBUF0	Receive Buffer for Serializer 0
01D0 1284	RBUF1	Receive Buffer for Serializer 1
01D0 1288	RBUF2	Receive Buffer for Serializer 2
01D0 128C	RBUF3	Receive Buffer for Serializer 3
01D0 1290 – 01D0 13FF	–	Reserved

Table 6-62. McASP0 Data Registers

HEX ADDRESS RANGE	ACRONYM	REGISTER NAME	COMMENTS
01D0 1400 – 01D0 17FF	RBUF/XBUF	McASP0 receive buffers or McASP0 transmit buffers via the Peripheral Data Bus.	(Used when RSEL or XSEL bits = 0 [these bits are located in the RFMT or XFMT registers, respectively].)

6.15.1.3 McASP0 Electrical Data/Timing

6.15.1.3.1 Multichannel Audio Serial Port (McASP) Timing

Table 6-63. Timing Requirements for McASP (see Figure 6-36 and Figure 6-37)(1)

NO.				-7/-6/-5/-4 -L/-Q6/-Q5/-Q4		UNIT
				MIN	MAX	
1	$t_{c(AHCKRX)}$	Cycle time, AHCLKR/X		25		ns
2	$t_{w(AHCKRX)}$	Pulse duration, AHCLKR/X high or low		10		ns
3	$t_{c(CKRX)}$	Cycle time, ACLKR/X	ACLKR/X ext	25		ns
4	$t_{w(CKRX)}$	Pulse duration, ACLKR/X high or low	ACLKR/X ext	10		ns
5	$t_{su(FRX-CKRX)}$	Setup time, AFSR/X input valid before ACLKR/X latches data	ACLKR/X int	11		ns
			ACLKR/X ext	3		ns
6	$t_{h(CKRX-FRX)}$	Hold time, AFSR/X input valid after ACLKR/X latches data	ACLKR/X int	0		ns
			ACLKR/X ext input	4		ns
			ACLKR/X ext output	6		ns
7	$t_{su(AXR-CKRX)}$	Setup time, AXR input valid before ACLKR/X latches data	ACLKR/X int	11		ns
			ACLKR/X ext	3		ns
8	$t_{h(CKRX-AXR)}$	Hold time, AXR input valid after ACLKR/X latches data	ACLKR/X int	3		ns
			ACLKR/X ext input	4		ns
			ACLKR/X ext output	6		ns

(1) ACLKX internal: ACLKXCTL.CLKXM=1, PDIR.ACLKX = 1
ACLKX external input: ACLKXCTL.CLKXM=0, PDIR.ACLKX=0
ACLKX external output: ACLKXCTL.CLKXM=0, PDIR.ACLKX=1
ACLKR internal: ACLKRCTL.CLKRM=1, PDIR.ACLKR = 1
ACLKR external input: ACLKRCTL.CLKRM=0, PDIR.ACLKR=0
ACLKR external output: ACLKRCTL.CLKRM=0, PDIR.ACLKR=1

Table 6-64. Switching Characteristics Over Recommended Operating Conditions for McASP[(1)(2)] (see Figure 6-36 and Figure 6-37)[(3)]

NO.	PARAMETER			-7/-6/-5/-4 -L/-Q6/-Q5/-Q4 MIN	MAX	UNIT
9	$t_{c(AHCKRX)}$	Cycle time, AHCLKR/X		25		ns
10	$t_{w(AHCKRX)}$	Pulse duration, AHCLKR/X high or low		AH - 2.5		ns
11	$t_{c(CKRX)}$	Cycle time, ACLKR/X	ACLKR/X int	25		ns
12	$t_{w(CKRX)}$	Pulse duration, ACLKR/X high or low	ACLKR/X int	A - 2.5		ns
13	$t_{d(CKRX-FRX)}$	Delay time, ACLKR/X transmit edge to AFSX/R output valid	ACLKR/X int	-2.25	5.5	ns
			ACLKR/X ext input	0	12.5	ns
			ACLKR/X ext output	0	14	ns
14	$t_{d(CKX-AXRV)}$	Delay time, ACLKX transmit edge to AXR output valid	ACLKX int	-2.25	5.5	ns
			ACLKX ext input	0	12.5	ns
			ACLKX ext output	0	14	ns
15	$t_{dis(CKRX-AXRHZ)}$	Disable time, AXR high impedance following last data bit from ACLKR/X transmit edge	ACLKR/X int	-4.5	8	ns
			ACLKR/X ext	-4.5	12.5	ns

(1) A = (ACLKR/X period)/2 in ns. For example, when ACLKR/X period is 25 ns, use A = 12.5 ns.
(2) AH = (AHCLKR/X period)/2 in ns. For example, when AHCLKR/X period is 25 ns, use AH = 12.5 ns.
(3) ACLKX internal: ACLKXCTL.CLKXM=1, PDIR.ACLKX = 1
ACLKX external input: ACLKXCTL.CLKXM=0, PDIR.ACLKX=0
ACLKX external output: ACLKXCTL.CLKXM=0, PDIR.ACLKX=1
ACLKR internal: ACLKRCTL.CLKRM=1, PDIR.ACLKR = 1
ACLKR external input: ACLKRCTL.CLKRM=0, PDIR.ACLKR=0
ACLKR external output: ACLKRCTL.CLKRM=0, PDIR.ACLKR=1

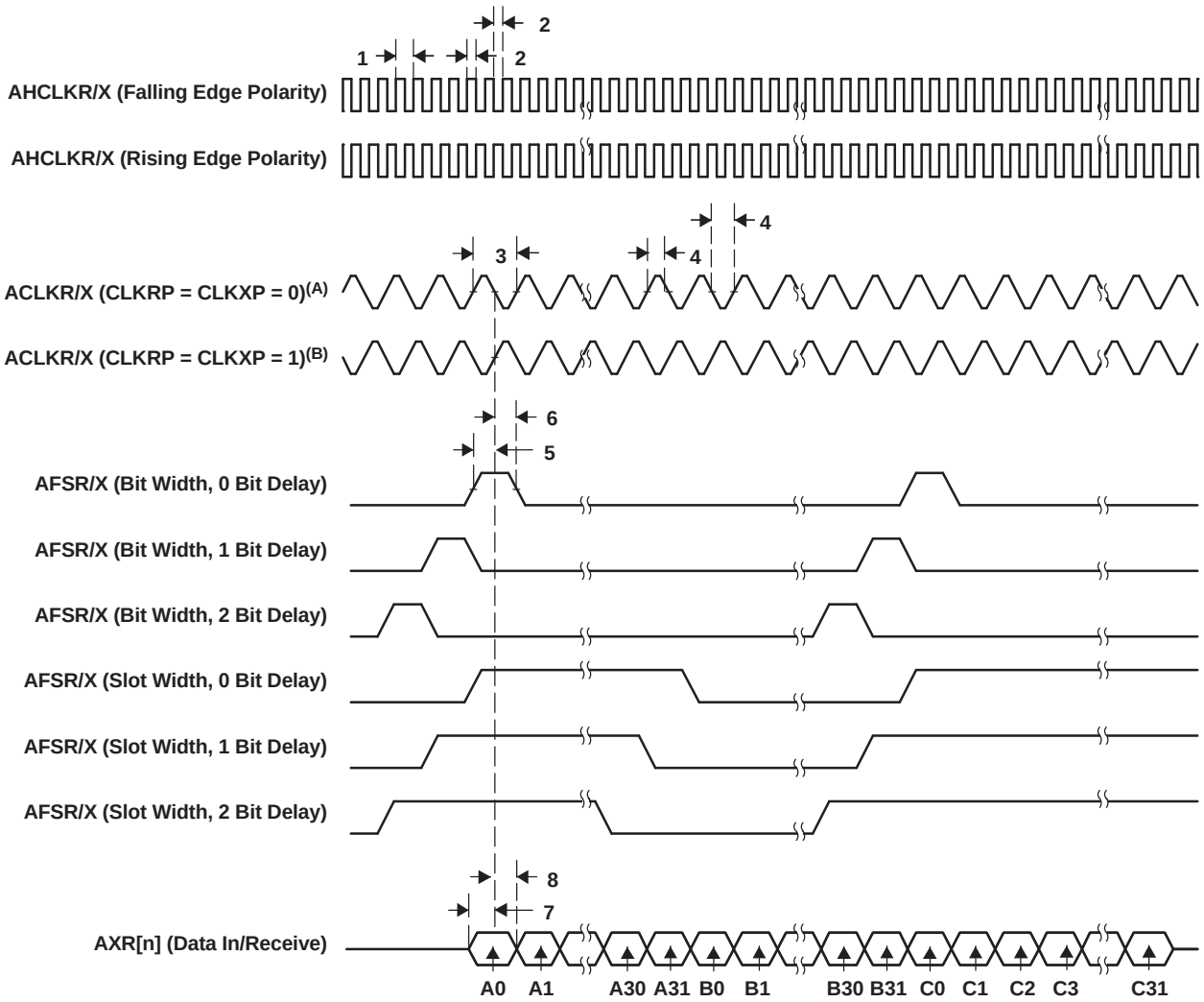

A. For CLKRP = CLKXP = 0, the McASP transmitter is configured for rising edge (to shift data out) and the McASP receiver is configured for falling edge (to shift data in).

B. For CLKRP = CLKXP = 1, the McASP transmitter is configured for falling edge (to shift data out) and the McASP receiver is configured for rising edge (to shift data in).

Figure 6-36. McASP Input Timings

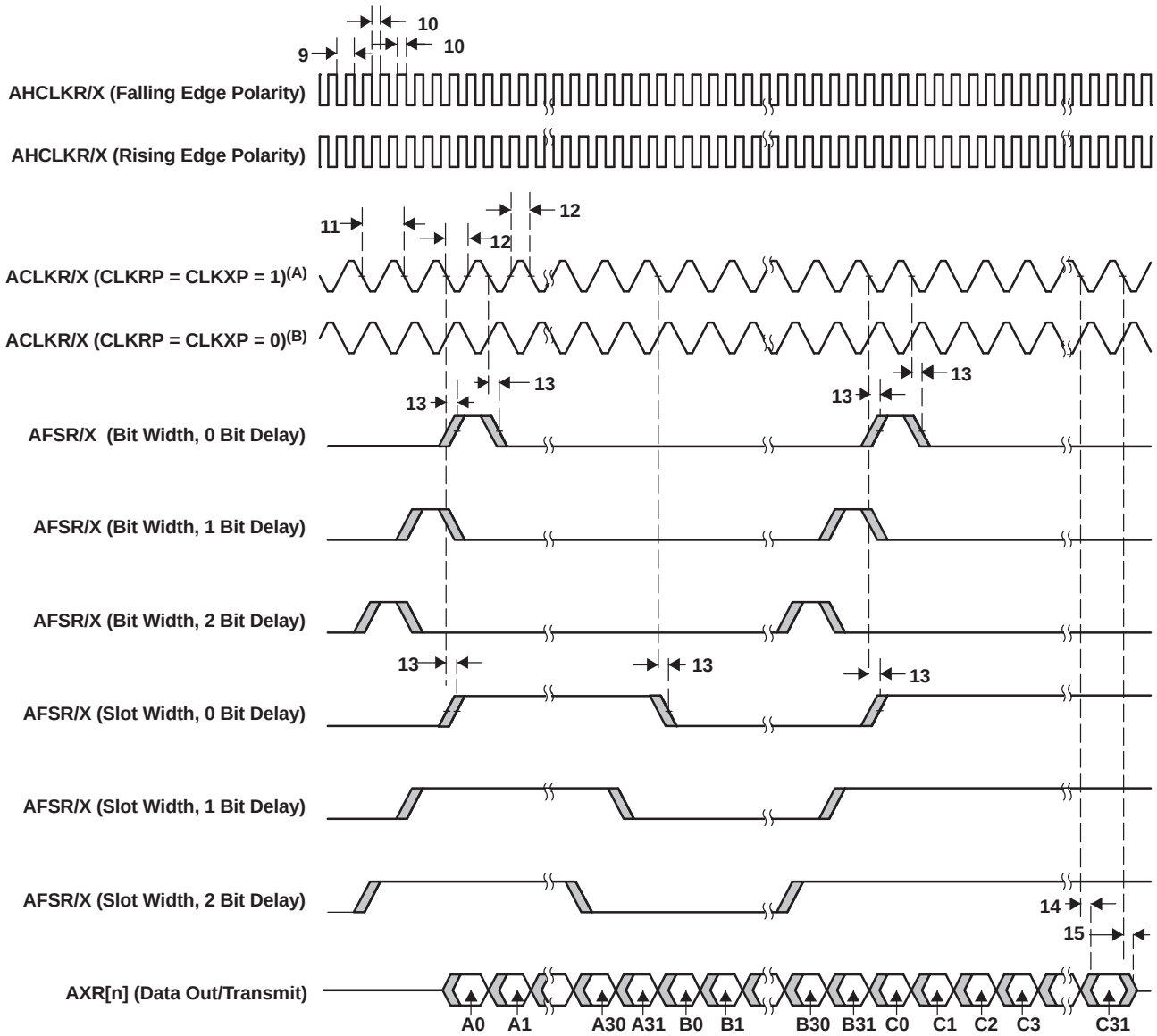

A. For CLKRP = CLKXP = 1, the McASP transmitter is configured for falling edge (to shift data out) and the McASP receiver is configured for rising edge (to shift data in).

B. For CLKRP = CLKXP = 0, the McASP transmitter is configured for rising edge (to shift data out) and the McASP receiver is configured for falling edge (to shift data in).

Figure 6-37. McASP Output Timings

6.16 High-End Controller Area Network Controller (HECC)

The DM6435 device has a High-End Controller Area Network Controllers (HECC). The HECC uses established protocol to communicate serially with other controllers in harsh environments. The HECC is fully compliant with the Controller Area Network (CAN) protocol, version 2.0B.

Key features of the HECC include the following:

- CAN, version 2.0B compliant
- 32 RX/TX message objects
- 32 receive identifier masks
- Programmable wake-up on bus activity
- Programmable interrupt scheme
- Automatic reply to a remote request
- Automatic re-transmission in case of error or loss of arbitration
- Protection against reception of a new message
- 32-bit time stamp
- Local network time counter
- Programmable priority register for each message
- Programmable transmission and reception time-out
- HECC/SCC mode of operation
- Standard-Extended Identifier
- Self-test mode

For more details on the HECC, see the *TMS320DM643x High-End CAN Controller (HECC)* User's Guide (literature number SPRU981).

6.16.1 HECC Device-Specific Information

Software ***must not*** access "Reserved" locations of the HECC. Access to HECC "Reserved" locations may hang the device.

6.16.2 HECC Peripheral Register Description(s)

Table 6-65 through Table 6-68 show the High-End CAN Controller (HECC) registers. For more detailed information, see the *TMS320DM643x DMP High-End CAN Controller* User's Guide (literature number SPRU981).

Table 6-65. HECC Control and Status Registers

HEX ADDRESS RANGE	ACRONYM	REGISTER NAME
01C2 3000	CANME	Mailbox Enable Register
01C2 3004	CANMD	Mailbox Direction Register
01C2 3008	CANTRS	Transmission Request Set Register
01C2 300C	CANTRR	Transmission Request Reset Register
01C2 3010	CANTA	Transmission Acknowledge Register
01C2 3014	CANAA	Abort Acknowledge Register
01C2 3018	CANRMP	Receive Message Pending Register
01C2 301C	CANRML	Receive Message Lost Register
01C2 3020	CANRFP	Remote Frame Pending Register
01C2 3024	CANGAM	Global Acceptance Mask Register (SCC Mode Only)
01C2 3028	CANMC	Master Control Register
01C2 302C	CANBTC	Bit-Timing Configuration Register
01C2 3030	CANES	Error and Status Register
01C2 3034	CANTEC	Transmit Error Counter Register
01C2 3038	CANREC	Receive Error Counter Register
01C2 303C	CANGIF0	Global Interrupt Flag 0 Register
01C2 3040	CANGIM	Global Interrupt Mask Register
01C2 3044	CANGIF1	Global Interrupt Flag 1 Register
01C2 3048	CANMIM	Mailbox Interrupt Mask Register
01C2 304C	CANMIL	Mailbox Interrupt Level Register
01C2 3050	CANOPC	Overwrite Protection Control Register
01C2 3054	CANTIOC	Transmit I/O Control Register
01C2 3058	CANRIOC	Receive I/O Control Register
01C2 305C	CANLNT	Local Network Time Register (HECC Mode Only)
01C2 3060	CANTOC	Time-Out Control Register (HECC Mode Only)
01C2 3064	CANTOS	Time-Out Status Register (HECC Mode Only)
01C2 3068 – 01C2 306C	–	Reserved
01C2 3070	CANETC	Error Test Control Register
01C2 3074 – 01C2 307C	–	Reserved
01C2 3080	SCCLAM0	SCC Local Acceptance Mask Register 0 (SCC Mode Only)
01C2 3084 – 01C2 3088	–	Reserved
01C2 308C	SSCLAM3	SCC Local Acceptance Mask Register 3 (SCC Mode Only)
01C2 3090 – 01C2 4FFF	–	Reserved

Table 6-66. HECC Message Object Registers[(1)]

HEX ADDRESS RANGE	ACRONYM	REGISTER NAME
HECC Local Acceptance Mask Registers		
01C2 5000	LAM0	HECC Local Acceptance Mask Register for Mailbox 0
01C2 5004	LAM1	HECC Local Acceptance Mask Register for Mailbox 1
01C2 5008	LAM2	HECC Local Acceptance Mask Register for Mailbox 2
01C2 500C	LAM3	HECC Local Acceptance Mask Register for Mailbox 3
01C2 5010	LAM4	HECC Local Acceptance Mask Register for Mailbox 4
01C2 5014	LAM5	HECC Local Acceptance Mask Register for Mailbox 5
01C2 5018	LAM6	HECC Local Acceptance Mask Register for Mailbox 6
01C2 501C	LAM7	HECC Local Acceptance Mask Register for Mailbox 7
01C2 5020	LAM8	HECC Local Acceptance Mask Register for Mailbox 8
01C2 5024	LAM9	HECC Local Acceptance Mask Register for Mailbox 9
01C2 5028	LAM10	HECC Local Acceptance Mask Register for Mailbox 10
01C2 502C	LAM11	HECC Local Acceptance Mask Register for Mailbox 11
01C2 5030	LAM12	HECC Local Acceptance Mask Register for Mailbox 12
01C2 5034	LAM13	HECC Local Acceptance Mask Register for Mailbox 13
01C2 5038	LAM14	HECC Local Acceptance Mask Register for Mailbox 14
01C2 503C	LAM15	HECC Local Acceptance Mask Register for Mailbox 15
01C2 5040	LAM16	HECC Local Acceptance Mask Register for Mailbox 16
01C2 5044	LAM17	HECC Local Acceptance Mask Register for Mailbox 17
01C2 5048	LAM18	HECC Local Acceptance Mask Register for Mailbox 18
01C2 504C	LAM19	HECC Local Acceptance Mask Register for Mailbox 19
01C2 5050	LAM20	HECC Local Acceptance Mask Register for Mailbox 20
01C2 5054	LAM21	HECC Local Acceptance Mask Register for Mailbox 21
01C2 5058	LAM22	HECC Local Acceptance Mask Register for Mailbox 22
01C2 505C	LAM23	HECC Local Acceptance Mask Register for Mailbox 23
01C2 5060	LAM24	HECC Local Acceptance Mask Register for Mailbox 24
01C2 5064	LAM25	HECC Local Acceptance Mask Register for Mailbox 25
01C2 5068	LAM26	HECC Local Acceptance Mask Register for Mailbox 26
01C2 506C	LAM27	HECC Local Acceptance Mask Register for Mailbox 27
01C2 5070	LAM28	HECC Local Acceptance Mask Register for Mailbox 28
01C2 5074	LAM29	HECC Local Acceptance Mask Register for Mailbox 29
01C2 5078	LAM30	HECC Local Acceptance Mask Register for Mailbox 30
01C2 507C	LAM31	HECC Local Acceptance Mask Register for Mailbox 31
Message Object Time-Stamp Registers		
01C2 5080	MOTS0	Message Object Time-Stamp Register for Mailbox 0
01C2 5084	MOTS1	Message Object Time-Stamp Register for Mailbox 1
01C2 5088	MOTS2	Message Object Time-Stamp Register for Mailbox 2
01C2 508C	MOTS3	Message Object Time-Stamp Register for Mailbox 3
01C2 5090	MOTS4	Message Object Time-Stamp Register for Mailbox 4
01C2 5094	MOTS5	Message Object Time-Stamp Register for Mailbox 5
01C2 5098	MOTS6	Message Object Time-Stamp Register for Mailbox 6
01C2 509C	MOTS7	Message Object Time-Stamp Register for Mailbox 7
01C2 50A0	MOTS8	Message Object Time-Stamp Register for Mailbox 8
01C2 50A4	MOTS9	Message Object Time-Stamp Register for Mailbox 9
01C2 50A8	MOTS10	Message Object Time-Stamp Register for Mailbox 10
01C2 50AC	MOTS11	Message Object Time-Stamp Register for Mailbox 11

(1) All registers in this table apply to HECC mode only, they ***do not*** apply to SCC mode.

Table 6-66. HECC Message Object Registers (continued)

HEX ADDRESS RANGE	ACRONYM	REGISTER NAME
01C2 50B0	MOTS12	Message Object Time-Stamp Register for Mailbox 12
01C2 50B4	MOTS13	Message Object Time-Stamp Register for Mailbox 13
01C2 50B8	MOTS14	Message Object Time-Stamp Register for Mailbox 14
01C2 50BC	MOTS15	Message Object Time-Stamp Register for Mailbox 15
01C2 50C0	MOTS16	Message Object Time-Stamp Register for Mailbox 16
01C2 50C4	MOTS17	Message Object Time-Stamp Register for Mailbox 17
01C2 50C8	MOTS18	Message Object Time-Stamp Register for Mailbox 18
01C2 50CC	MOTS19	Message Object Time-Stamp Register for Mailbox 19
01C2 50D0	MOTS20	Message Object Time-Stamp Register for Mailbox 20
01C2 50D4	MOTS21	Message Object Time-Stamp Register for Mailbox 21
01C2 50D8	MOTS22	Message Object Time-Stamp Register for Mailbox 22
01C2 50DC	MOTS23	Message Object Time-Stamp Register for Mailbox 23
01C2 50E0	MOTS24	Message Object Time-Stamp Register for Mailbox 24
01C2 50E4	MOTS25	Message Object Time-Stamp Register for Mailbox 25
01C2 50E8	MOTS26	Message Object Time-Stamp Register for Mailbox 26
01C2 50EC	MOTS27	Message Object Time-Stamp Register for Mailbox 27
01C2 50F0	MOTS28	Message Object Time-Stamp Register for Mailbox 28
01C2 50F4	MOTS29	Message Object Time-Stamp Register for Mailbox 29
01C2 50F8	MOTS30	Message Object Time-Stamp Register for Mailbox 30
01C2 50FC	MOTS31	Message Object Time-Stamp Register for Mailbox 31
Message Object Time-Out Registers		
01C2 5100	MOTO0	Message Object Time-Out Register for Mailbox 0
01C2 5104	MOTO1	Message Object Time-Out Register for Mailbox 1
01C2 5108	MOTO2	Message Object Time-Out Register for Mailbox 2
01C2 510C	MOTO3	Message Object Time-Out Register for Mailbox 3
01C2 5110	MOTO4	Message Object Time-Out Register for Mailbox 4
01C2 5114	MOTO5	Message Object Time-Out Register for Mailbox 5
01C2 5118	MOTO6	Message Object Time-Out Register for Mailbox 6
01C2 511C	MOTO7	Message Object Time-Out Register for Mailbox 7
01C2 5120	MOTO8	Message Object Time-Out Register for Mailbox 8
01C2 5124	MOTO9	Message Object Time-Out Register for Mailbox 9
01C2 5128	MOTO10	Message Object Time-Out Register for Mailbox 10
01C2 512C	MOTO11	Message Object Time-Out Register for Mailbox 11
01C2 5130	MOTO12	Message Object Time-Out Register for Mailbox 12
01C2 5134	MOTO13	Message Object Time-Out Register for Mailbox 13
01C2 5138	MOTO14	Message Object Time-Out Register for Mailbox 14
01C2 513C	MOTO15	Message Object Time-Out Register for Mailbox 15
01C2 5140	MOTO16	Message Object Time-Out Register for Mailbox 16
01C2 5144	MOTO17	Message Object Time-Out Register for Mailbox 17
01C2 5148	MOTO18	Message Object Time-Out Register for Mailbox 18
01C2 514C	MOTO19	Message Object Time-Out Register for Mailbox 19
01C2 5150	MOTO20	Message Object Time-Out Register for Mailbox 20
01C2 5154	MOTO21	Message Object Time-Out Register for Mailbox 21
01C2 5158	MOTO22	Message Object Time-Out Register for Mailbox 22
01C2 515C	MOTO23	Message Object Time-Out Register for Mailbox 23
01C2 5160	MOTO24	Message Object Time-Out Register for Mailbox 24
01C2 5164	MOTO25	Message Object Time-Out Register for Mailbox 25

Table 6-66. HECC Message Object Registers (continued)

HEX ADDRESS RANGE	ACRONYM	REGISTER NAME
01C2 5168	MOTO26	Message Object Time-Out Register for Mailbox 26
01C2 516C	MOTO27	Message Object Time-Out Register for Mailbox 27
01C2 5170	MOTO28	Message Object Time-Out Register for Mailbox 28
01C2 5174	MOTO29	Message Object Time-Out Register for Mailbox 29
01C2 5178	MOTO30	Message Object Time-Out Register for Mailbox 30
01C2 517C	MOTO31	Message Object Time-Out Register for Mailbox 31

Table 6-67. HECC Message Mailbox RAM (1) (2)

HEX ADDRESS RANGE	DESCRIPTION
01C2 4000 – 01C2 400F	Mailbox 0 (4 32-bit Registers)
01C2 4010 – 01C2 401F	Mailbox 1 (4 32-bit Registers)
01C2 4020 – 01C2 402F	Mailbox 2 (4 32-bit Registers)
01C2 4030 – 01C2 403F	Mailbox 3 (4 32-bit Registers)
01C2 4040 – 01C2 404F	Mailbox 4 (4 32-bit Registers)
...	...
01C2 41E0 – 01C2 41EF	Mailbox 30 (4 32-bit Registers)
01C2 41F0 – 01C2 41FF	Mailbox 31 (4 32-bit Registers)

(1) This table summarizes the address ranges for the Message Mailboxes 0 to 31. For the contents within each Message Mailbox RAM, see Table 6-68, *Message Mailbox n RAM Entries*.
(2) For SCC mode, *only* Mailboxes 0 to 15 are supported.

Table 6-68. HECC Message Mailbox n RAM Entries (1)

HEX ADDRESS OFFSET (within RAM)	ACRONYM (2)	MAILBOX REGISTER NAME
0	MIDn	Message Identifier Register for Mailbox n
4	MCFn	Message Control Field Register for Mailbox n
8	MDLn	Message Data Low-Word Register for Mailbox n
C	MDHn	Message Data High-Word Register for Mailbox n

(1) For the hex address range of Mailbox n, see Table 6-67, *Message Mailbox RAM*. For example, Message Mailbox 0 occupies hex address range 0x01C2 4000 – 0x01C2 400F.
(2) The suffix "n" indicates the Message Mailbox number. For example, Message Mailbox 0 has the following Message Mailbox Registers: MID0, MCF0, MDL0, and MDH0.

6.16.3 HECC Electrical Data/Timing

Table 6-69. Timing Requirements for HECC Receive[(1)] (see Figure 6-38)

NO.			-7/-6/-5/-4 -L/-Q6/-Q5/-Q4		UNIT
			MIN	MAX	
1	$f_{(baud)}$	Maximum programmable baud rate		1	Mbps
2	$t_{w(HECC\_RX)}$	Pulse duration, receive data bit	H - 2	H + 2	ns

(1) H = HECC baud time = 1/programmed baud rate.

Table 6-70. Switching Characteristics Over Recommended Operating Conditions for HECC Transmit[(1)] (see Figure 6-38)

NO.	PARAMETER		-7/-6/-5/-4 -L/-Q6/-Q5/-Q4		UNIT
			MIN	MAX	
3	$f_{(baud)}$	Maximum programmable baud rate		1	Mbps
4	$t_{w(HECC\_TX)}$	Pulse duration, transmit data bit	H - 2	H + 2	ns

(1) H = HECC baud time = 1/programmed baud rate.

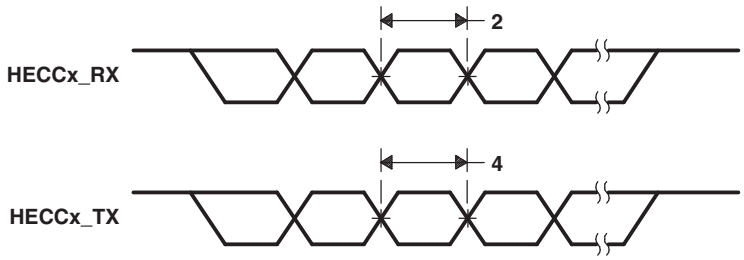

Figure 6-38. HECC Transmit/Receive Timing

6.17 Ethernet Media Access Controller (EMAC)

The Ethernet Media Access Controller (EMAC) provides an efficient interface between DM6435 and the network. The DM6435 EMAC supports both 10Base-T (10 Mbits/second [Mbps]) and 100Base-TX (100 Mbps) in either half- or full-duplex mode. The EMAC module also supports hardware flow control and quality of service (QOS) support.

The EMAC controls the flow of packet data from the DM6435 device to the PHY. The MDIO module controls PHY configuration and status monitoring.

The EMAC module conforms to the IEEE 802.3-2002 standard, describing the "Carrier Sense Multiple Access with Collision Detection (CSMA/CD) Access Method and Physical Layer" specifications. The IEEE 802.3 standard has also been adopted by ISO/IEC and re-designated as ISO/IEC 8802-3:2000(E).

Deviation from this standard, the EMAC module does not use the Transmit Coding Error signal MTXER. Instead of driving the error pin when an underflow condition occurs on a transmitted frame, the EMAC will intentionally generate an incorrect checksum by inverting the frame CRC, so that the transmitted frame will be detected as an error by the network.

Both the EMAC and the MDIO modules interface to the DM6435 device through a custom interface that allows efficient data transmission and reception. This custom interface is referred to as the EMAC control module, and is considered integral to the EMAC/MDIO peripheral. The control module is also used to multiplex and control interrupts.

For the *DM6435 Ethernet Media Access Controller (EMAC)/Management Data Input/Output (MDIO) Module* User's Guide (literature number SPRU941) which describes the DM6435 EMAC peripheral in detail, see Section 2.9, *Documentation Support* section . For a list of supported registers and register fields, see Table 6-71 [Ethernet MAC (EMAC) Control Registers] and Table 6-72 [EMAC Statistics Registers] in this data manual.

6.17.1 EMAC Peripheral Register Description(s)

Table 6-71. Ethernet MAC (EMAC) Control Registers

HEX ADDRESS RANGE	ACRONYM	REGISTER NAME
01C8 0000	TXIDVER	Transmit Identification and Version Register
01C8 0004	TXCONTROL	Transmit Control Register
01C8 0008	TXTEARDOWN	Transmit Teardown Register
01C8 0010	RXIDVER	Receive Identification and Version Register
01C8 0014	RXCONTROL	Receive Control Register
01C8 0018	RXTEARDOWN	Receive Teardown Register
01C8 0080	TXINTSTATRAW	Transmit Interrupt Status (Unmasked) Register
01C8 0084	TXINTSTATMASKED	Transmit Interrupt Status (Masked) Register
01C8 0088	TXINTMASKSET	Transmit Interrupt Mask Set Register
01C8 008C	TXINTMASKCLEAR	Transmit Interrupt Mask Clear Register
01C8 0090	MACINVECTOR	MAC Input Vector Register
01C8 00A0	RXINTSTATRAW	Receive Interrupt Status (Unmasked) Register
01C8 00A4	RXINTSTATMASKED	Receive Interrupt Status (Masked) Register
01C8 00A8	RXINTMASKSET	Receive Interrupt Mask Set Register
01C8 00AC	RXINTMASKCLEAR	Receive Interrupt Mask Clear Register
01C8 00B0	MACINTSTATRAW	MAC Interrupt Status (Unmasked) Register
01C8 00B4	MACINTSTATMASKED	MAC Interrupt Status (Masked) Register
01C8 00B8	MACINTMASKSET	MAC Interrupt Mask Set Register
01C8 00BC	MACINTMASKCLEAR	MAC Interrupt Mask Clear Register
01C8 0100	RXMBPENABLE	Receive Multicast/Broadcast/Promiscuous Channel Enable Register
01C8 0104	RXUNICASTSET	Receive Unicast Enable Set Register

Table 6-71. Ethernet MAC (EMAC) Control Registers (continued)

HEX ADDRESS RANGE	ACRONYM	REGISTER NAME
01C8 0108	RXUNICASTCLEAR	Receive Unicast Clear Register
01C8 010C	RXMAXLEN	Receive Maximum Length Register
01C8 0110	RXBUFFEROFFSET	Receive Buffer Offset Register
01C8 0114	RXFILTERLOWTHRESH	Receive Filter Low Priority Frame Threshold Register
01C8 0120	RX0FLOWTHRESH	Receive Channel 0 Flow Control Threshold Register
01C8 0124	RX1FLOWTHRESH	Receive Channel 1 Flow Control Threshold Register
01C8 0128	RX2FLOWTHRESH	Receive Channel 2 Flow Control Threshold Register
01C8 012C	RX3FLOWTHRESH	Receive Channel 3 Flow Control Threshold Register
01C8 0130	RX4FLOWTHRESH	Receive Channel 4 Flow Control Threshold Register
01C8 0134	RX5FLOWTHRESH	Receive Channel 5 Flow Control Threshold Register
01C8 0138	RX6FLOWTHRESH	Receive Channel 6 Flow Control Threshold Register
01C8 013C	RX7FLOWTHRESH	Receive Channel 7 Flow Control Threshold Register
01C8 0140	RX0FREEBUFFER	Receive Channel 0 Free Buffer Count Register
01C8 0144	RX1FREEBUFFER	Receive Channel 1 Free Buffer Count Register
01C8 0148	RX2FREEBUFFER	Receive Channel 2 Free Buffer Count Register
01C8 014C	RX3FREEBUFFER	Receive Channel 3 Free Buffer Count Register
01C8 0150	RX4FREEBUFFER	Receive Channel 4 Free Buffer Count Register
01C8 0154	RX5FREEBUFFER	Receive Channel 5 Free Buffer Count Register
01C8 0158	RX6FREEBUFFER	Receive Channel 6 Free Buffer Count Register
01C8 015C	RX7FREEBUFFER	Receive Channel 7 Free Buffer Count Register
01C8 0160	MACCONTROL	MAC Control Register
01C8 0164	MACSTATUS	MAC Status Register
01C8 0168	EMCONTROL	Emulation Control Register
01C8 016C	FIFOCONTROL	FIFO Control Register (Transmit and Receive)
01C8 0170	MACCONFIG	MAC Configuration Register
01C8 0174	SOFTRESET	Soft Reset Register
01C8 01D0	MACSRCADDRLO	MAC Source Address Low Bytes Register (Lower 32-bits)
01C8 01D4	MACSRCADDRHI	MAC Source Address High Bytes Register (Upper 16-bits)
01C8 01D8	MACHASH1	MAC Hash Address Register 1
01C8 01DC	MACHASH2	MAC Hash Address Register 2
01C8 01E0	BOFFTEST	Back Off Test Register
01C8 01E4	TPACETEST	Transmit Pacing Algorithm Test Register
01C8 01E8	RXPAUSE	Receive Pause Timer Register
01C8 01EC	TXPAUSE	Transmit Pause Timer Register
01C8 0200 - 01C8 02FC	(see Table 6-72)	EMAC Statistics Registers
01C8 0500	MACADDRLO	MAC Address Low Bytes Register
01C8 0504	MACADDRHI	MAC Address High Bytes Register
01C8 0508	MACINDEX	MAC Index Register
01C8 0600	TX0HDP	Transmit Channel 0 DMA Head Descriptor Pointer Register
01C8 0604	TX1HDP	Transmit Channel 1 DMA Head Descriptor Pointer Register
01C8 0608	TX2HDP	Transmit Channel 2 DMA Head Descriptor Pointer Register
01C8 060C	TX3HDP	Transmit Channel 3 DMA Head Descriptor Pointer Register
01C8 0610	TX4HDP	Transmit Channel 4 DMA Head Descriptor Pointer Register
01C8 0614	TX5HDP	Transmit Channel 5 DMA Head Descriptor Pointer Register
01C8 0618	TX6HDP	Transmit Channel 6 DMA Head Descriptor Pointer Register
01C8 061C	TX7HDP	Transmit Channel 7 DMA Head Descriptor Pointer Register
01C8 0620	RX0HDP	Receive Channel 0 DMA Head Descriptor Pointer Register

Table 6-71. Ethernet MAC (EMAC) Control Registers (continued)

HEX ADDRESS RANGE	ACRONYM	REGISTER NAME
01C8 0624	RX1HDP	Receive Channel 1 DMA Head Descriptor Pointer Register
01C8 0628	RX2HDP	Receive Channel 2 DMA Head Descriptor Pointer Register
01C8 062C	RX3HDP	Receive Channel 3 DMA Head Descriptor Pointer Register
01C8 0630	RX4HDP	Receive Channel 4 DMA Head Descriptor Pointer Register
01C8 0634	RX5HDP	Receive Channel 5 DMA Head Descriptor Pointer Register
01C8 0638	RX6HDP	Receive Channel 6 DMA Head Descriptor Pointer Register
01C8 063C	RX7HDP	Receive Channel 7 DMA Head Descriptor Pointer Register
01C8 0640	TX0CP	Transmit Channel 0 Completion Pointer (Interrupt Acknowledge) Register
01C8 0644	TX1CP	Transmit Channel 1 Completion Pointer (Interrupt Acknowledge) Register
01C8 0648	TX2CP	Transmit Channel 2 Completion Pointer (Interrupt Acknowledge) Register
01C8 064C	TX3CP	Transmit Channel 3 Completion Pointer (Interrupt Acknowledge) Register
01C8 0650	TX4CP	Transmit Channel 4 Completion Pointer (Interrupt Acknowledge) Register
01C8 0654	TX5CP	Transmit Channel 5 Completion Pointer (Interrupt Acknowledge) Register
01C8 0658	TX6CP	Transmit Channel 6 Completion Pointer (Interrupt Acknowledge) Register
01C8 065C	TX7CP	Transmit Channel 7 Completion Pointer (Interrupt Acknowledge) Register
01C8 0660	RX0CP	Receive Channel 0 Completion Pointer (Interrupt Acknowledge) Register
01C8 0664	RX1CP	Receive Channel 1 Completion Pointer (Interrupt Acknowledge) Register
01C8 0668	RX2CP	Receive Channel 2 Completion Pointer (Interrupt Acknowledge) Register
01C8 066C	RX3CP	Receive Channel 3 Completion Pointer (Interrupt Acknowledge) Register
01C8 0670	RX4CP	Receive Channel 4 Completion Pointer (Interrupt Acknowledge) Register
01C8 0674	RX5CP	Receive Channel 5 Completion Pointer (Interrupt Acknowledge) Register
01C8 0678	RX6CP	Receive Channel 6 Completion Pointer (Interrupt Acknowledge) Register
01C8 067C	RX7CP	Receive Channel 7 Completion Pointer (Interrupt Acknowledge) Register

Table 6-72. EMAC Statistics Registers

HEX ADDRESS RANGE	ACRONYM	REGISTER NAME
01C8 0200	RXGOODFRAMES	Good Receive Frames Register
01C8 0204	RXBCASTFRAMES	Broadcast Receive Frames Register (Total number of good broadcast frames received)
01C8 0208	RXMCASTFRAMES	Multicast Receive Frames Register (Total number of good multicast frames received)
01C8 020C	RXPAUSEFRAMES	Pause Receive Frames Register
01C8 0210	RXCRCERRORS	Receive CRC Errors Register (Total number of frames received with CRC errors)
01C8 0214	RXALIGNCODEERRORS	Receive Alignment/Code Errors Register (Total number of frames received with alignment/code errors)
01C8 0218	RXOVERSIZED	Receive Oversized Frames Register (Total number of oversized frames received)
01C8 021C	RXJABBER	Receive Jabber Frames Register (Total number of jabber frames received)
01C8 0220	RXUNDERSIZED	Receive Undersized Frames Register (Total number of undersized frames received)
01C8 0224	RXFRAGMENTS	Receive Frame Fragments Register
01C8 0228	RXFILTERED	Filtered Receive Frames Register
01C8 022C	RXQOSFILTERED	Received QOS Filtered Frames Register
01C8 0230	RXOCTETS	Receive Octet Frames Register (Total number of received bytes in good frames)
01C8 0234	TXGOODFRAMES	Good Transmit Frames Register (Total number of good frames transmitted)
01C8 0238	TXBCASTFRAMES	Broadcast Transmit Frames Register
01C8 023C	TXMCASTFRAMES	Multicast Transmit Frames Register
01C8 0240	TXPAUSEFRAMES	Pause Transmit Frames Register
01C8 0244	TXDEFERRED	Deferred Transmit Frames Register
01C8 0248	TXCOLLISION	Transmit Collision Frames Register
01C8 024C	TXSINGLECOLL	Transmit Single Collision Frames Register
01C8 0250	TXMULTICOLL	Transmit Multiple Collision Frames Register
01C8 0254	TXEXCESSIVECOLL	Transmit Excessive Collision Frames Register
01C8 0258	TXLATECOLL	Transmit Late Collision Frames Register
01C8 025C	TXUNDERRUN	Transmit Underrun Error Register
01C8 0260	TXCARRIERSENSE	Transmit Carrier Sense Errors Register
01C8 0264	TXOCTETS	Transmit Octet Frames Register
01C8 0268	FRAME64	Transmit and Receive 64 Octet Frames Register
01C8 026C	FRAME65T127	Transmit and Receive 65 to 127 Octet Frames Register
01C8 0270	FRAME128T255	Transmit and Receive 128 to 255 Octet Frames Register
01C8 0274	FRAME256T511	Transmit and Receive 256 to 511 Octet Frames Register
01C8 0278	FRAME512T1023	Transmit and Receive 512 to 1023 Octet Frames Register
01C8 027C	FRAME1024TUP	Transmit and Receive 1024 to 1518 Octet Frames Register
01C8 0280	NETOCTETS	Network Octet Frames Register
01C8 0284	RXSOFOVERRUNS	Receive FIFO or DMA Start of Frame Overruns Register
01C8 0288	RXMOFOVERRUNS	Receive FIFO or DMA Middle of Frame Overruns Register
01C8 028C	RXDMAOVERRUNS	Receive DMA Start of Frame and Middle of Frame Overruns Register

Table 6-73. EMAC Control Module Registers

HEX ADDRESS RANGE	ACRONYM	REGISTER NAME
0x01C8 1004	EWCTL	Interrupt control register
0x01C8 1008	EWINTTCNT	Interrupt timer count

Table 6-74. EMAC Control Module RAM

HEX ADDRESS RANGE	ACRONYM	REGISTER NAME
0x01C8 2000 - 0x01C8 3FFF		EMAC Control Module Descriptor Memory

6.17.2 EMAC Electrical Data/Timing

Table 6-75. Timing Requirements for MRCLK (see Figure 6-39)

NO.			-7/-6/-5/-4 -L/-Q6/-Q5/-Q4				UNIT
			10 Mbps		100 Mbps		
			MIN	MAX	MIN	MAX	
1	$t_{c(MRCLK)}$	Cycle time, MRCLK	400		40		ns
2	$t_{w(MRCLKH)}$	Pulse duration, MRCLK high	140		14		ns
3	$t_{w(MRCLKL)}$	Pulse duration, MRCLK low	140		14		ns

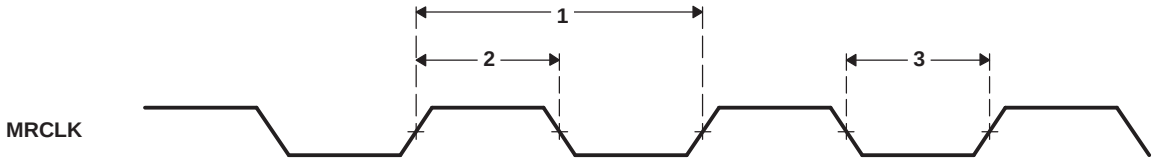

Figure 6-39. MRCLK Timing (EMAC - Receive)

Table 6-76. Timing Requirements for MTCLK (see Figure 6-39)

NO.			-7/-6/-5/-4 -L/-Q6/-Q5/-Q4				UNIT
			10 Mbps		100 Mbps		
			MIN	MAX	MIN	MAX	
1	$t_{c(MTCLK)}$	Cycle time, MTCLK	400		40		ns
2	$t_{w(MTCLKH)}$	Pulse duration, MTCLK high	140		14		ns
3	$t_{w(MTCLKL)}$	Pulse duration, MTCLK low	140		14		ns

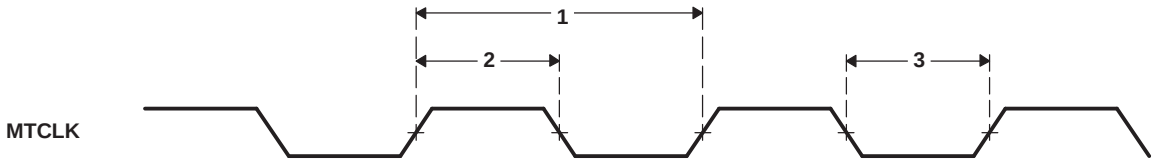

Figure 6-40. MTCLK Timing (EMAC - Transmit)

Table 6-77. Timing Requirements for EMAC MII Receive 10/100 Mbit/s(1) (see Figure 6-41)

NO.			-7/-6/-5/-4 -L/-Q6/-Q5/-Q4		UNIT
			MIN	MAX	
1	$t_{su(MRXD-MRCLKH)}$	Setup time, receive selected signals valid before MRCLK high	8		ns
2	$t_{h(MRCLKH-MRXD)}$	Hold time, receive selected signals valid after MRCLK high	8		ns

(1) Receive selected signals include: MRXD3-MRXD0, MRXDV, and MRXER.

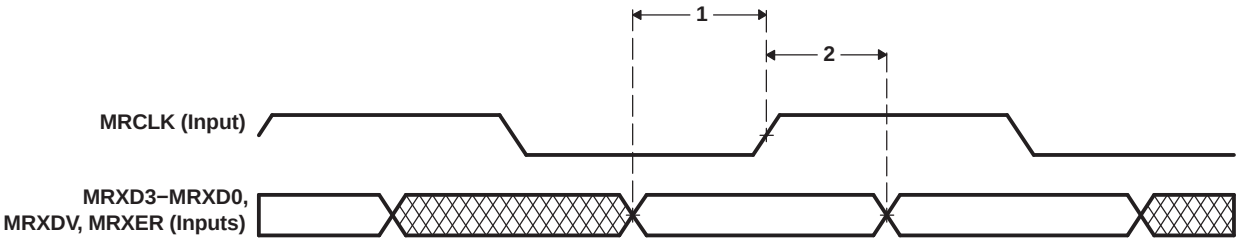

Figure 6-41. EMAC Receive Interface Timing

Table 6-78. Switching Characteristics Over Recommended Operating Conditions for EMAC MII Transmit 10/100 Mbit/s(1) (see Figure 6-42)

NO.			-7/-6/-5/-4 -L/-Q6/-Q5/-Q4		UNIT
			MIN	MAX	
1	$t_{d(MTCLKH-MTXD)}$	Delay time, MTCLK high to transmit selected signals valid	2	25	ns

(1) Transmit selected signals include: MTXD3-MTXD0, and MTXEN.

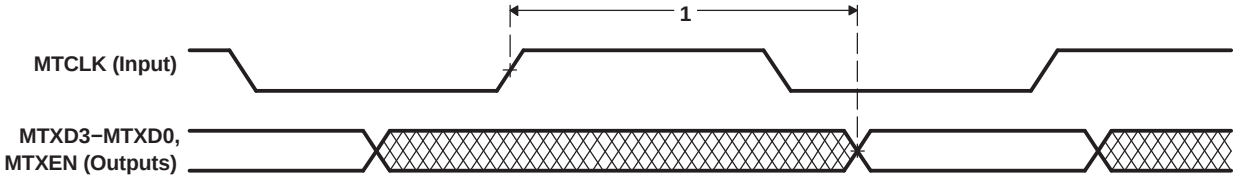

Figure 6-42. EMAC Transmit Interface Timing

6.18 Management Data Input/Output (MDIO)

The Management Data Input/Output (MDIO) module continuously polls all 32 MDIO addresses in order to enumerate all PHY devices in the system.

The Management Data Input/Output (MDIO) module implements the 802.3 serial management interface to interrogate and control Ethernet PHY(s) using a shared two-wire bus. Host software uses the MDIO module to configure the auto-negotiation parameters of each PHY attached to the EMAC, retrieve the negotiation results, and configure required parameters in the EMAC module for correct operation. The module is designed to allow almost transparent operation of the MDIO interface, with very little maintenance from the core processor. Only one PHY may be connected at any given time.

For more detailed information on the MDIO peripheral, see the *Documentation Support* section for the Ethernet Media Access Controller (EMAC)/Management Data Input/Output (MDIO) Module Reference Guide. For a list of supported registers and register fields, see Table 6-79 [MDIO Registers] in this data manual.

6.18.1 Peripheral Register Description(s)

Table 6-79. MDIO Registers

HEX ADDRESS RANGE	ACRONYM	REGISTER NAME
0x01C8 4000	–	Reserved
0x01C8 4004	CONTROL	MDIO Control Register
0x01C8 4008	ALIVE	MDIO PHY Alive Status Register
0x01C8 400C	LINK	MDIO PHY Link Status Register
0x01C8 4010	LINKINTRAW	MDIO Link Status Change Interrupt (Unmasked) Register
0x01C8 4014	LINKINTMASKED	MDIO Link Status Change Interrupt (Masked) Register
0x01C8 4018	–	Reserved
0x01C8 4020	USERINTRAW	MDIO User Command Complete Interrupt (Unmasked) Register
0x01C8 4024	USERINTMASKED	MDIO User Command Complete Interrupt (Masked) Register
0x01C8 4028	USERINTMASKSET	MDIO User Command Complete Interrupt Mask Set Register
0x01C8 402C	USERINTMASKCLEAR	MDIO User Command Complete Interrupt Mask Clear Register
0x01C8 4030 - 0x01C8 407C	–	Reserved
0x01C8 4080	USERACCESS0	MDIO User Access Register 0
0x01C8 4084	USERPHYSEL0	MDIO User PHY Select Register 0
0x01C8 4088	USERACCESS1	MDIO User Access Register 1
0x01C8 408C	USERPHYSEL1	MDIO User PHY Select Register 1
0x01C8 4090 - 0x01C8 47FF	–	Reserved

6.18.2 Management Data Input/Output (MDIO) Electrical Data/Timing

Table 6-80. Timing Requirements for MDIO Input (see Figure 6-43 and Figure 6-44)

NO.			-7/-6/-5/-4 -L/-Q6/-Q5/-Q4		UNIT
			MIN	MAX	
1	$t_{c(MDCLK)}$	Cycle time, MDCLK	400		ns
2	$t_{w(MDCLK)}$	Pulse duration, MDCLK high/low	180		ns
3	$t_{t(MDCLK)}$	Transition time, MDCLK		5	ns
4	$t_{su(MDIO-MDCLKH)}$	Setup time, MDIO data input valid before MDCLK high	10		ns
5	$t_{h(MDCLKH-MDIO)}$	Hold time, MDIO data input valid after MDCLK high	10		ns

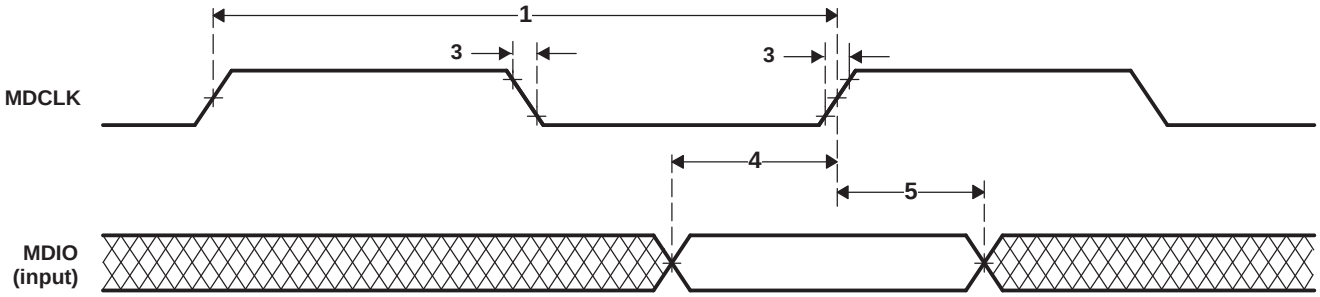

Figure 6-43. MDIO Input Timing

Table 6-81. Switching Characteristics Over Recommended Operating Conditions for MDIO Output (see Figure 6-44)

NO.			-7/-6/-5/-4 -L/-Q6/-Q5/-Q4		UNIT
			MIN	MAX	
7	$t_{d(MDCLKL-MDIO)}$	Delay time, MDCLK low to MDIO data output valid		100	ns

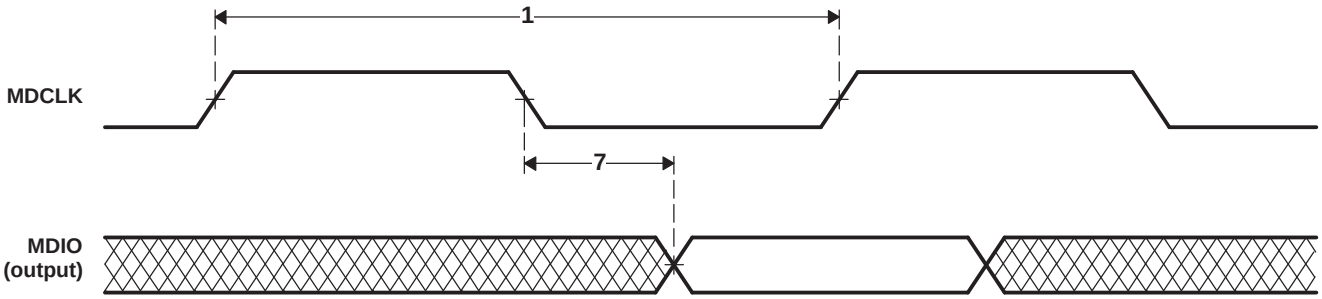

Figure 6-44. MDIO Output Timing

6.19 Timers

The DM6435 device has 3 64-bit general-purpose timers which have the following features:

- 64-bit count-up counter
- Timer modes:
  - 64-bit general-purpose timer mode (Timer 0 and 1)
  - Dual 32-bit general-purpose timer mode (Timer 0 and 1)
  - Watchdog timer mode (Timer 2)
- 2 possible clock sources:

  - Internal clock
  - External clock input via timer input pin TINPL (Timer 0 and 1 only)
- 2 operation modes:
  - One-time operation (timer runs for one period then stops)
  - Continuous operation (timer automatically resets after each period)
- Generates interrupts to the DSP
- Generates sync event to EDMA
- Causes device global reset upon watchdog timer timeout (Timer 2 only)

For more detailed information, see Section 2.9, *Documentation Support* for the *TMS320DM643x DMP 64-Bit Timer* User's Guide (literature number SPRU989).

6.19.1 Timer Peripheral Register Description(s)

Table 6-82. Timer 0 Registers

HEX ADDRESS RANGE	ACRONYM	DESCRIPTION
0x01C2 1400	-	Reserved
0x01C2 1404	EMUMGT_CLKSPD	Timer 0 Emulation Management/Clock Speed Register
0x01C2 1410	TIM12	Timer 0 Counter Register 12
0x01C2 1414	TIM34	Timer 0 Counter Register 34
0x01C2 1418	PRD12	Timer 0 Period Register 12
0x01C2 141C	PRD34	Timer 0 Period Register 34
0x01C2 1420	TCR	Timer 0 Control Register
0x01C2 1424	TGCR	Timer 0 Global Control Register
0x01C2 1428 - 0x01C2 17FF	-	Reserved

Table 6-83. Timer 1 Registers

HEX ADDRESS RANGE	ACRONYM	DESCRIPTION
0x01C2 1800	-	Reserved
0x01C2 1804	EMUMGT_CLKSPD	Timer 1 Emulation Management/Clock Speed Register
0x01C2 1810	TIM12	Timer 1 Counter Register 12
0x01C2 1814	TIM34	Timer 1 Counter Register 34
0x01C2 1818	PRD12	Timer 1 Period Register 12
0x01C2 181C	PRD34	Timer 1 Period Register 34
0x01C2 1820	TCR	Timer 1 Control Register
0x01C2 1824	TGCR	Timer 1 Global Control Register
0x01C2 1828 - 0x01C2 1BFF	-	Reserved

Table 6-84. Timer 2 (Watchdog) Registers

HEX ADDRESS RANGE	ACRONYM	DESCRIPTION
0x01C2 1C00	-	Reserved
0x01C2 1C04	EMUMGT_CLKSPD	Timer 2 Emulation Management/Clock Speed Register
0x01C2 1C10	TIM12	Timer 2 Counter Register 12
0x01C2 1C14	TIM34	Timer 2 Counter Register 34
0x01C2 1C18	PRD12	Timer 2 Period Register 12
0x01C2 1C1C	PRD34	Timer 2 Period Register 34
0x01C2 1C20	TCR	Timer 2 Control Register
0x01C2 1C24	TGCR	Timer 2 Global Control Register
0x01C2 1C28	WDTCR	Timer 2 Watchdog Timer Control Register

Table 6-84. Timer 2 (Watchdog) Registers (continued)

HEX ADDRESS RANGE	ACRONYM	DESCRIPTION
0x01C2 1C2C - 0x01C2 1FFF	-	Reserved

6.19.2 Timer Electrical Data/Timing

Table 6-85. Timing Requirements for Timer Input(1)(2)(3) (see Figure 6-45)

NO.			-7/-6/-5/-4 -L/-Q6/-Q5/-Q4 MIN	MAX	UNIT
1	$t_{w(TINPH)}$ Pulse duration, TINPxL high	TINP0L, if TIMERCTL.TINP0SEL = 0 [default]	2P		ns
		TINP0L, if TIMERCTL.TINP0SEL = 1	0.33P		ns
		TINP1L	2P		ns
2	$t_{w(TINPL)}$ Pulse duration, TINPxL low	TINP0L, if TIMERCTL.TINP0SEL = 0 [default]	2P		ns
		TINP0L, if TIMERCTL.TINP0SEL = 1	0.33P		ns
		TINP1L	2P		ns

(1) P = MXI/CLKIN cycle time in ns. For example, when MXI/CLKIN frequency is 27 MHz, use P = 37.0$\overline{37}$ ns.
(2) The TIMERCTL.TINP0SEL field in the System Module determines if the TINP0L input directly goes to Timer 0 (TIMERCTL.TINP0SEL=0), or if the TINP0L input is first divided down by 6 before going to Timer 0 (TIMERCTL.TINP0SEL=1).
(3) TINP1L input goes directly to Timer 1.

Table 6-86. Switching Characteristics Over Recommended Operating Conditions for Timer Output(1) (see Figure 6-45)

NO.			-7/-6/-5/-4 -L/-Q6/-Q5/-Q4 MIN	MAX	UNIT
3	$t_{w(TOUTH)}$	Pulse duration, TOUTxL high	P		ns
4	$t_{w(TOUTL)}$	Pulse duration, TOUTxL low	P		ns

(1) P = MXI/CLKIN cycle time in ns. For example, when MXI/CLKIN frequency is 27 MHz, use P = 37.0$\overline{37}$ ns.

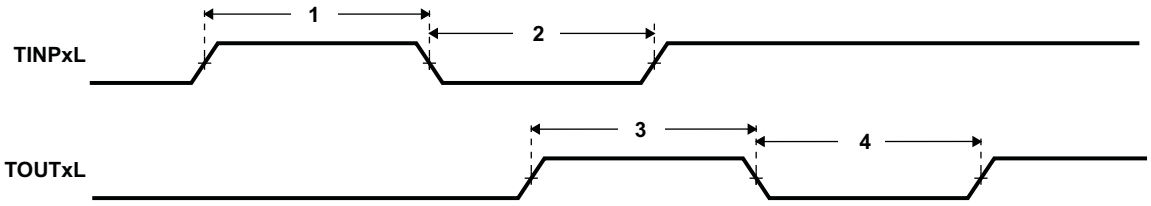

Figure 6-45. Timer Timing

6.20 Pulse Width Modulator (PWM)

The 3 DM6435 Pulse Width Modulator (PWM) peripherals support the following features:

- Period counter
- First-phase duration counter
- Repeat count for one-shot operation
- Configurable to operate in either one-shot or continuous mode
- Buffered period and first-phase duration registers
- One-shot operation triggerable by hardware events with programmable edge transitions. (low-to-high or high-to-low).
- One-shot operation generates N+1 periods of waveform, N being the repeat count register value
- Emulation support

The register memory maps for PWM0/1/2 are shown in Table 6-87, Table 6-88, and Table 6-89.

Table 6-87. PWM0 Register Memory Map

HEX ADDRESS RANGE	ACRONYM	REGISTER NAME
0x01C2 2000		Reserved
0x01C2 2004	PCR	PWM0 Peripheral Control Register
0x01C2 2008	CFG	PWM0 Configuration Register
0x01C2 200C	START	PWM0 Start Register
0x01C2 2010	RPT	PWM0 Repeat Count Register
0x01C2 2014	PER	PWM0 Period Register
0x01C2 2018	PH1D	PWM0 First-Phase Duration Register
0x01C2 201C - 0x01C2 23FF	-	Reserved

Table 6-88. PWM1 Register Memory Map

HEX ADDRESS RANGE	ACRONYM	REGISTER NAME
0x01C2 2400		Reserved
0x01C2 2404	PCR	PWM1 Peripheral Control Register
0x01C2 2408	CFG	PWM1 Configuration Register
0x01C2 240C	START	PWM1 Start Register
0x01C2 2410	RPT	PWM1 Repeat Count Register
0x01C2 2414	PER	PWM1 Period Register
0x01C2 2418	PH1D	PWM1 First-Phase Duration Register
0x01C2 241C -0x01C2 27FF	-	Reserved

Table 6-89. PWM2 Register Memory Map

HEX ADDRESS RANGE	ACRONYM	REGISTER NAME
0x01C2 2800		Reserved
0x01C2 2804	PCR	PWM2 Peripheral Control Register
0x01C2 2808	CFG	PWM2 Configuration Register
0x01C2 280C	START	PWM2 Start Register
0x01C2 2810	RPT	PWM2 Repeat Count Register
0x01C2 2814	PER	PWM2 Period Register
0x01C2 2818	PH1D	PWM2 First-Phase Duration Register
0x01C2 281C - 0x01C2 2BFF	-	Reserved

6.20.1 PWM0/1/2 Electrical Data/Timing

Table 6-90. Switching Characteristics Over Recommended Operating Conditions for PWM0/1/2 Outputs (see Figure 6-46 and Figure 6-47)

NO.	PARAMETER		-7/-6/-5/-4 -L/-Q6/-Q5/-Q4		UNIT
			MIN	MAX	
1	$t_{w(PWMH)}$	Pulse duration, PWMx high	37		ns
2	$t_{w(PWML)}$	Pulse duration, PWMx low	37		ns
3	$t_{t(PWM)}$	Transition time, PWMx		5	ns
4	$t_{d(CCDC-PWMV)}$	Delay time, CCDC(VD) trigger event to PWMx valid	2	10	ns

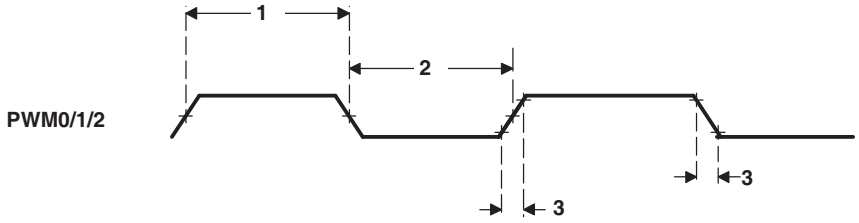

Figure 6-46. PWM Output Timing

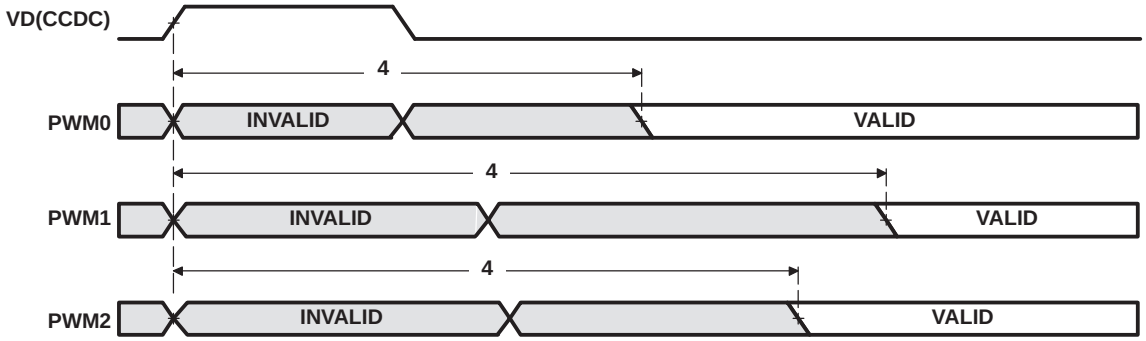

Figure 6-47. PWM Output Delay Timing

6.21 VLYNQ

The DM6435 VLYNQ peripheral provides a high speed serial communications interface with the following features.

- Low Pin Count
- Scalable Performance / Support
- Simple Packet Based Transfer Protocol for Memory Mapped Access
  - Write Request / Data Packet
  - Read Request Packet
  - Read Response Data Packet
  - Interrupt Request Packet
- Supports both Symmetric and Asymmetric Operation
  - Tx pins on first device connect to Rx pins on second device and vice versa
  - Data pin widths are automatically detected after reset
  - Request packets, response packets, and flow control information are all multiplexed and sent across the same physical pins
  - Supports both Host/Peripheral and Peer to Peer communication
- Simple Block Code Packet Formatting (8b/10b)
- In Band Flow Control
  - No extra pins needed
  - Allows receiver to momentarily throttle back transmitter when overflow is about to occur
  - Uses built in special code capability of block code to seamlessly interleave flow control information with user data
  - Allows system designer to balance cost of data buffering versus performance
- Multiple outstanding transactions
- Automatic packet formatting optimizations
- Internal loop-back mode

6.21.1 VLYNQ Peripheral Register Description(s)

Table 6-91. VLYNQ Registers

HEX ADDRESS RANGE	ACRONYM	REGISTER NAME
0x01E0 1000	-	Reserved
0x01E0 1004	CTRL	VLYNQ Local Control Register
0x01E0 1008	STAT	VLYNQ Local Status Register
0x01E0 100C	INTPRI	VLYNQ Local Interrupt Priority Vector Status/Clear Register
0x01E0 1010	INTSTATCLR	VLYNQ Local Unmasked Interrupt Status/Clear Register
0x01E0 1014	INTPENDSET	VLYNQ Local Interrupt Pending/Set Register
0x01E0 1018	INTPTR	VLYNQ Local Interrupt Pointer Register
0x01E0 101C	XAM	VLYNQ Local Transmit Address Map Register
0x01E0 1020	RAMS1	VLYNQ Local Receive Address Map Size 1 Register
0x01E0 1024	RAMO1	VLYNQ Local Receive Address Map Offset 1 Register
0x01E0 1028	RAMS2	VLYNQ Local Receive Address Map Size 2 Register
0x01E0 102C	RAMO2	VLYNQ Local Receive Address Map Offset 2 Register
0x01E0 1030	RAMS3	VLYNQ Local Receive Address Map Size 3 Register
0x01E0 1034	RAMO3	VLYNQ Local Receive Address Map Offset 3 Register
0x01E0 1038	RAMS4	VLYNQ Local Receive Address Map Size 4 Register
0x01E0 103C	RAMO4	VLYNQ Local Receive Address Map Offset 4 Register

Table 6-91. VLYNQ Registers (continued)

HEX ADDRESS RANGE	ACRONYM	REGISTER NAME
0x01E0 1040	CHIPVER	VLYNQ Local Chip Version Register
0x01E0 1044	AUTNGO	VLYNQ Local Auto Negotiation Register
0x01E0 1048	-	Reserved
0x01E0 104C	-	Reserved
0x01E0 1050 - 0x01E0 105C	-	Reserved
0x01E0 1060	-	Reserved
01E0 10C00 0064	-	Reserved
0x01E0 1068 - 0x01E0 107C	-	Reserved *for future use*
0x01E0 1080	RREVID	VLYNQ Remote Revision Register
0x01E0 1084	RCTRL	VLYNQ Remote Control Register
0x01E0 1088	RSTAT	VLYNQ Remote Status Register
0x01E0 108C	RINTPRI	VLYNQ Remote Interrupt Priority Vector Status/Clear Register
0x01E0 1090	RINTSTATCLR	VLYNQ Remote Unmasked Interrupt Status/Clear Register
0x01E0 1094	RINTPENDSET	VLYNQ Remote Interrupt Pending/Set Register
0x01E0 1098	RINTPTR	VLYNQ Remote Interrupt Pointer Register
0x01E0 109C	RXAM	VLYNQ Remote Transmit Address Map Register
0x01E0 10A0	RRAMS1	VLYNQ Remote Receive Address Map Size 1 Register
0x01E0 10A4	RRAMO1	VLYNQ Remote Receive Address Map Offset 1 Register
0x01E0 10A8	RRAMS2	VLYNQ Remote Receive Address Map Size 2 Register
0x01E0 10AC	RRAMO2	VLYNQ Remote Receive Address Map Offset 2 Register
0x01E0 10B0	RRAMS3	VLYNQ Remote Receive Address Map Size 3 Register
0x01E0 10B4	RRAMO3	VLYNQ Remote Receive Address Map Offset 3 Register
0x01E0 10B8	RRAMS4	VLYNQ Remote Receive Address Map Size 4 Register
0x01E0 10BC	RRAMO4	VLYNQ Remote Receive Address Map Offset 4 Register
0x01E0 10C0	RCHIPVER	VLYNQ Remote Chip Version Register (values on the device_id and device_rev pins of remote VLYNQ)
0x01E0 10C4	RAUTNGO	VLYNQ Remote Auto Negotiation Register
0x01E0 10C8	RMANNGO	VLYNQ Remote Manual Negotiation Register
0x01E0 10CC	RNGOSTAT	VLYNQ Remote Negotiation Status Register
0x01E0 10D0 - 0x01E0 10DC	-	Reserved
0x01E0 10E0	RINTVEC0	VLYNQ Remote Interrupt Vectors 3 - 0 (sourced from vlynq_int_i[3:0] port of remote VLYNQ)
0x01E0 10E4	RINTVEC1	VLYNQ Remote Interrupt Vectors 7 - 4 (sourced from vlynq_int_i[7:4] port of remote VLYNQ)
0x01E0 10E8 - 0x01E0 10FC	-	Reserved *for future use*
0x01E0 1100 - 0x01E0 1FFF	-	Reserved

6.21.2 VLYNQ Electrical Data/Timing

Table 6-92. Timing Requirements for VLYNQ_CLK Input (see Figure 6-48)

NO.			-7/-6/-5/-4 -L/-Q6/-Q5/-Q4		UNIT
			MIN	MAX	
1	$t_{c(VCLK)}$	Cycle time, VLYNQ_CLK	10		ns
2	$t_{w(VCLKH)}$	Pulse duration, VLYNQ_CLK high	3		ns
3	$t_{w(VCLKL)}$	Pulse duration, VLYNQ_CLK low	3		ns

Table 6-93. Switching Characteristics Over Recommended Operating Conditions for VLYNQ_CLK Output (see Figure 6-48)

NO.	PARAMETER		-7/-6/-5/-4 -L/-Q6/-Q5/-Q4		UNIT
			MIN	MAX	
1	$t_{c(VCLK)}$	Cycle time, VLYNQ_CLK	10		ns
2	$t_{w(VCLKH)}$	Pulse duration, VLYNQ_CLK high	4		ns
3	$t_{w(VCLKL)}$	Pulse duration, VLYNQ_CLK low	4		ns

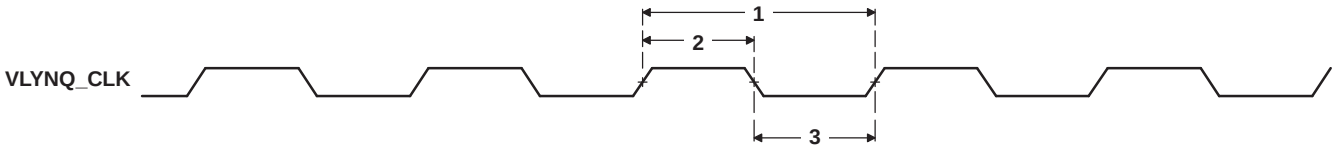

Figure 6-48. VLYNQ_CLK Timing for VLYNQ

Table 6-94. Switching Characteristics Over Recommended Operating Conditions for Transmit Data for the VLYNQ Module (see Figure 6-49)

NO.	PARAMETER		-7/-6/-5/-4 -L/-Q6/-Q5/-Q4		UNIT
			MIN	MAX	
1	$t_{d(VCLKH-TXDI)}$	Delay time, VLYNQ_CLK high to VLYNQ_TXD[3:0] invalid	2.25		ns
2	$t_{d(VCLKH-TXDV)}$	Delay time, VLYNQ_CLK high to VLYNQ_TXD[3:0] valid		12	ns

Table 6-95. Timing Requirements for Receive Data for the VLYNQ Module(1) (see Figure 6-49)

NO.				-7/-6/-5/-4 -L/-Q6/-Q5/-Q4 MIN	MAX	UNIT
3	$t_{su(RXDV-VCLKH)}$	Setup time, VLYNQ_RXD[3:0] valid before VLYNQ_CLK high	RTM disabled, RTM sample = 3	1.75		ns
			RTM enabled	(1)		ns
4	$t_{h(VCLKH-RXDV)}$	Hold time, VLYNQ_RXD[3:0] valid after VLYNQ_CLK high	RTM disabled, RTM sample = 3	3		ns
			RTM enabled	(1)		ns

(1) The VLYNQ receive timing manager (RTM) is a serial receive logic designed to eliminate setup and hold violations that could occur in traditional input signals. RTM logic automatically selects the setup and hold timing from one of eight data flops (see Table 6-96). When RTM logic is disabled, the setup and hold timing from the default data flop (3) is used.

Table 6-96. RTM RX Data Flop Hold/Setup Timing Constraints (Typical Values)

RX Data Flop	HOLD (Y)	SETUP (X)
0	1.3	0.9
1	1.4	0.7
2	1.5	-0.4
3	1.6	-0.6
4	1.8	-0.8
5	2.0	-1.0
6	2.2	-1.1
7	2.4	-1.2

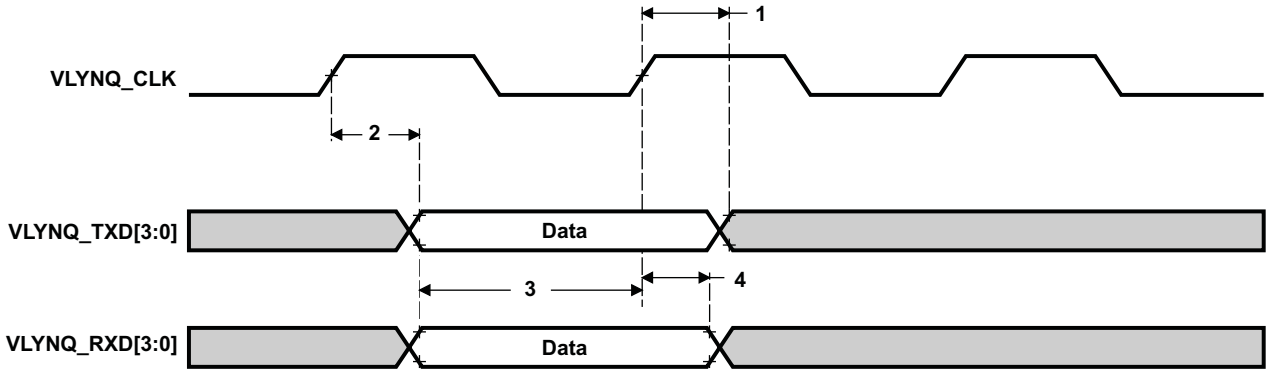

Figure 6-49. VLYNQ Transmit/Receive Timing

6.22 General-Purpose Input/Output (GPIO)

The GPIO peripheral provides general-purpose pins that can be configured as either inputs or outputs. When configured as an output, a write to an internal register can control the state driven on the output pin. When configured as an input, the state of the input is detectable by reading the state of an internal register. In addition, the GPIO peripheral can produce CPU interrupts and EDMA events in different interrupt/event generation modes. The GPIO peripheral provides generic connections to external devices. The GPIO pins are grouped into banks of 16 pins per bank (i.e., bank 0 consists of GP[0:15]).

The DM6435 GPIO peripheral supports the following:

- Up to 111 3.3-V GPIO pins, GP[0:110]
- Interrupts:
  - Up to 8 unique GP[0:7] interrupts from Bank 0
  - 7 GPIO bank (aggregated) interrupt signals from each of the 7 banks of GPIOs
  - Interrupts can be triggered by rising and/or falling edge, specified for each interrupt capable GPIO signal
- DMA events:
  - Up to 8 unique GPIO DMA events from Bank 0
  - 7 GPIO bank (aggregated) DMA event signals from each of the 7 banks of GPIOs
- Set/clear functionality: Firmware writes 1 to corresponding bit position(s) to set or to clear GPIO signal(s). This allows multiple firmware processes to toggle GPIO output signals without critical section protection (disable interrupts, program GPIO, re-enable interrupts, to prevent context switching to anther process during GPIO programming).
- Separate Input/Output registers
- Output register in addition to set/clear so that, if preferred by firmware, some GPIO output signals can be toggled by direct write to the output register(s).
- Output register, when read, reflects output drive status. This, in addition to the input register reflecting pin status and open-drain I/O cell, allows wired logic be implemented.

The memory map for the GPIO registers is shown in Table 6-97. For more detailed information on GPIOs, see the *TMS320DM643x DMP General-Purpose Input/Output (GPIO)* User's Guide (literature number SPRU988).

6.22.1 GPIO Peripheral Register Description(s)

Table 6-97. GPIO Registers

HEX ADDRESS RANGE	ACRONYM	REGISTER NAME
0x01C6 7000	PID	Peripheral Identification Register
0x01C6 7004	-	Reserved
0x01C6 7008	BINTEN	GPIO interrupt per-bank enable
GPIO Banks 0 and 1		
0x01C6 700C	-	Reserved
0x01C6 7010	DIR01	GPIO Banks 0 and 1 Direction Register (GP[0:31])
0x01C6 7014	OUT_DATA01	GPIO Banks 0 and 1 Output Data Register (GP[0:31])
0x01C6 7018	SET_DATA01	GPIO Banks 0 and 1 Set Data Register (GP[0:31])
0x01C6 701C	CLR_DATA01	GPIO Banks 0 and 1 Clear data for banks 0 and 1 (GP[0:31])
0x01C6 7020	IN_DATA01	GPIO Banks 0 and 1 Input Data Register (GP[0:31])
0x01C6 7024	SET_RIS_TRIG01	GPIO Banks 0 and 1 Set Rising Edge Interrupt Register (GP[0:31])
0x01C6 7028	CLR_RIS_TRIG01	GPIO Banks 0 and 1 Clear Rising Edge Interrupt Register (GP[0:31])
0x01C6 702C	SET_FAL_TRIG01	GPIO Banks 0 and 1 Set Falling Edge Interrupt Register (GP[0:31])
0x01C6 7030	CLR_FAL_TRIG01	GPIO Banks 0 and 1 Clear Falling Edge Interrupt Register (GP[0:31])
0x01C6 7034	INSTAT01	GPIO Banks 0 and 1 Interrupt Status Register (GP[0:31])
GPIO Banks 2 and 3		
0x01C6 7038	DIR23	GPIO Banks 2 and 3 Direction Register (GP[32:63])
0x01C6 703C	OUT_DATA23	GPIO Banks 2 and 3 Output Data Register (GP[32:63])
0x01C6 7040	SET_DATA23	GPIO Banks 2 and 3 Set Data Register (GP[32:63])
0x01C6 7044	CLR_DATA23	GPIO Banks 2 and 3 Clear Data Register (GP[32:63])
0x01C6 7048	IN_DATA23	GPIO Banks 2 and 3 Input Data Register (GP[32:63])
0x01C6 704C	SET_RIS_TRIG23	GPIO Banks 2 and 3 Set Rising Edge Interrupt Register (GP[32:63])
0x01C6 7050	CLR_RIS_TRIG23	GPIO Banks 2 and 3 Clear Rising Edge Interrupt Register (GP[32:63])
0x01C6 7054	SET_FAL_TRIG23	GPIO Banks 2 and 3 Set Falling Edge Interrupt Register (GP[32:63])
0x01C6 7058	CLR_FAL_TRIG23	GPIO Banks 2 and 3 Clear Falling Edge Interrupt Register (GP[32:63])
0x01C6 705C	INSTAT23	GPIO Banks 2 and 3 Interrupt Status Register (GP[32:63])
GPIO Bank 4 and 5		
0x01C6 7060	DIR45	GPIO Bank 4 and 5 Direction Register (GP[64:95])
0x01C6 7064	OUT_DATA45	GPIO Bank 4 and 5 Output Data Register (GP[64:95])
0x01C6 7068	SET_DATA45	GPIO Bank 4 and 5 Set Data Register (GP[64:95])
0x01C6 706C	CLR_DATA45	GPIO Bank 4 and 5 Clear Data Register (GP[64:95])
0x01C6 7070	IN_DATA45	GPIO Bank 4 and 5 Input Data Register (GP[64:95])
0x01C6 7074	SET_RIS_TRIG45	GPIO Bank 4 and 5 Set Rising Edge Interrupt Register (GP[64:95])
0x01C6 7078	CLR_RIS_TRIG45	GPIO Bank 4 and 5 Clear Rising Edge Interrupt Register (GP[64:95])
0x01C6 707C	SET_FAL_TRIG45	GPIO Bank 4 and 5 Set Falling Edge Interrupt Register (GP[64:95])
0x01C6 7080	CLR_FAL_TRIG45	GPIO Bank 4 and 5 Clear Falling Edge Interrupt Register (GP[64:95])
0x01C6 7084	INSTAT45	GPIO Bank 4 and 5 Interrupt Status Register (GP[64:95])
GPIO Bank 6		
0x01C6 7088	DIR6	GPIO Bank 6 Direction Register (GP[96:110])
0x01C6 708C	OUT_DATA6	GPIO Bank 6 Output Data Register (GP[96:110])
0x01C6 7090	SET_DATA6	GPIO Bank 6 Set Data Register (GP[96:110])
0x01C6 7094	CLR_DATA6	GPIO Bank 6 Clear Data Register (GP[96:110])
0x01C6 7098	IN_DATA6	GPIO Bank 6 Input Data Register (GP[96:110])
0x01C6 709C	SET_RIS_TRIG6	GPIO Bank 6 Set Rising Edge Interrupt Register (GP[96:110])
0x01C6 70A0	CLR_RIS_TRIG6	GPIO Bank 6 Clear Rising Edge Interrupt Register (GP[96:110])

Table 6-97. GPIO Registers (continued)

HEX ADDRESS RANGE	ACRONYM	REGISTER NAME
0x01C6 70A4	SET_FAL_TRIG6	GPIO Bank 6 Set Falling Edge Interrupt Register (GP[96:110])
0x01C6 70A8	CLR_FAL_TRIG6	GPIO Bank 6 Clear Falling Edge Interrupt Register (GP[96:110])
0x01C6 70AC	INSTAT6	GPIO Bank 6 Interrupt Status Register (GP[96:110])
0x01C6 70B0 - 0x01C6 7FFF	-	Reserved

6.22.2 GPIO Peripheral Input/Output Electrical Data/Timing

Table 6-98. Timing Requirements for GPIO Inputs[(1)] (see Figure 6-50)

NO.			-7/-6/-5/-4 -L/-Q6/-Q5/-Q4		UNIT
			MIN	MAX	
1	$t_{w(GPIH)}$	Pulse duration, GP[x] input high	2C[(2)]		ns
2	$t_{w(GPIL)}$	Pulse duration, GP[x] input low	2C[(2)]		ns

(1) The pulse width given is sufficient to generate a CPU interrupt or an EDMA event. However, if a user wants to have DM6435 recognize the GP[x] input changes through software polling of the GPIO register, the GP[x] input duration must be extended to allow DM6435 enough time to access the GPIO register through the internal bus.
(2) C = SYSCLK3 period in ns. For example, when running parts at 600 MHz, use C = 10ns.

Table 6-99. Switching Characteristics Over Recommended Operating Conditions for GPIO Outputs (see Figure 6-50)

NO.	PARAMETER		-7/-6/-5/-4 -L/-Q6/-Q5/-Q4		UNIT
			MIN	MAX	
3	$t_{w(GPOH)}$	Pulse duration, GP[x] output high	2C[(1)(2)]		ns
4	$t_{w(GPOL)}$	Pulse duration, GP[x] output low	2C[(1)(2)]		ns

(1) This parameter value should not be used as a maximum performance specification. Actual performance of back-to-back accesses of the GPIO is dependent upon internal bus activity.
(2) C = SYSCLK3 period in ns. For example, when running parts at 600 MHz, use C = 10ns.

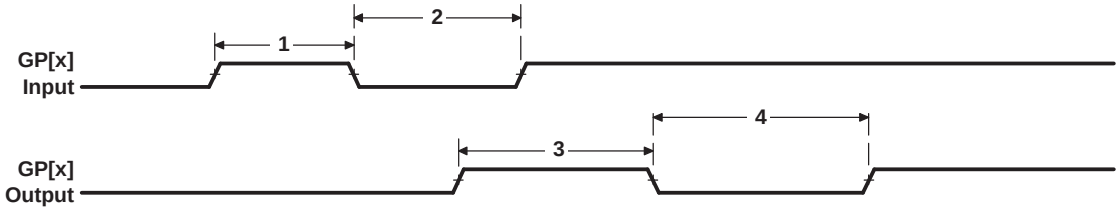

Figure 6-50. GPIO Port Timing

6.23 IEEE 1149.1 JTAG

The JTAG[3] interface is used for BSDL testing and emulation of the DM6435 device.

$\overline{\text{TRST}}$ only needs to be released when it is necessary to use a JTAG controller to debug the device or exercise the device's boundary scan functionality. **Note:** $\overline{\text{TRST}}$ is synchronous and ***must*** be clocked by TCK; otherwise, the boundary scan logic may not respond as expected after $\overline{\text{TRST}}$ is asserted.

For maximum reliability, DM6435 includes an internal pulldown (IPD) on the $\overline{\text{TRST}}$ pin to ensure that $\overline{\text{TRST}}$ will always be asserted upon power up and the device's internal emulation logic will always be properly initialized.

JTAG controllers from Texas Instruments actively drive $\overline{\text{TRST}}$ high. However, some third-party JTAG controllers may not drive $\overline{\text{TRST}}$ high but expect the use of a pullup resistor on $\overline{\text{TRST}}$.

When using this type of JTAG controller, assert $\overline{\text{TRST}}$ to initialize the device after powerup and externally drive $\overline{\text{TRST}}$ high before attempting any emulation or boundary scan operations.

6.23.1 JTAG ID (JTAGID) Register Description(s)

(3) IEEE Standard 1149.1-1990 Standard-Test-Access Port and Boundary Scan Architecture.

Table 6-100. JTAG ID (JTAGID) Register

HEX ADDRESS RANGE	ACRONYM	REGISTER NAME	COMMENTS
0x01C4 0028	JTAGID	JTAG Identification Register	Read-only. Provides 32-bit JTAG ID of the device.

The JTAG ID register is a read-only register that identifies to the customer the JTAG/Device ID. For the DM6435 device, the JTAG ID register resides at address location 0x01C4 0028. For the actual register bit names and their associated bit field descriptions, see Figure 6-51 and Table 6-101.

31-28	27-12	11-1	0
VARIANT (4-Bit)	PART NUMBER (16-Bit)	MANUFACTURER (11-Bit)	LSB
R-n	R-1011 0111 0010 0001	R-0000 0010 111	R-1

LEGEND: R = Read, W = Write, n = value at reset

Figure 6-51. JTAG ID (JTAGID) Register—0x01C4 0028

Table 6-101. JTAG ID (JTAGID) Register Selection Bit Descriptions

BIT	NAME	DESCRIPTION
31:28	VARIANT	Variant (4-Bit) value. A read from this field always returns 0b0000.
27:12	PART NUMBER	Part Number (16-Bit) value. DM6435 value: 1011 0111 0010 0001.
11-1	MANUFACTURER	Manufacturer (11-Bit) value. DM6435 value: 0000 0010 111.
0	LSB	LSB. This bit is read as a "1" for DM6435.

6.23.2 JTAG Electrical Data/Timing

Table 6-102. Timing Requirements for JTAG Test Port (see Figure 6-52)

NO.			-7/-6/-5/-4 -L/-Q6/-Q5/-Q4		UNIT
			MIN	MAX	
1	$t_{c(TCK)}$	Cycle time, TCK	33		ns
3	$t_{su(TDIV-TCKH)}$	Setup time, TDI/TMS/$\overline{TRST}$ valid before TCK high	2.5		ns
4	$t_{h(TCKH-TDIV)}$	Hold time, TDI/TMS/$\overline{TRST}$ valid after TCK high	16.5		ns

Table 6-103. Switching Characteristics Over Recommended Operating Conditions for JTAG Test Port (see Figure 6-52)

NO.	PARAMETER		-7/-6/-5/-4 -L/-Q6/-Q5/-Q4		UNIT
			MIN	MAX	
2	$t_{d(TCKL-TDOV)}$	Delay time, TCK low to TDO valid	0	14	ns

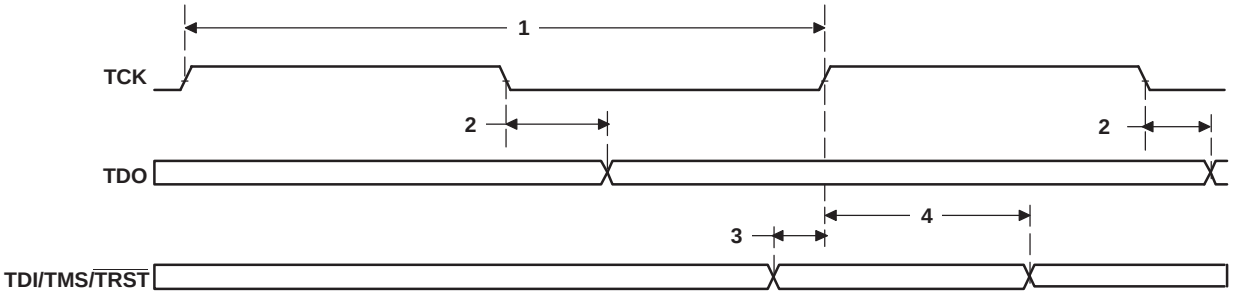

Figure 6-52. JTAG Test-Port Timing

7 Mechanical Data

The following table(s) show the thermal resistance characteristics for the PBGA–ZWT and ZDU mechanical package(s). For more details, see the *Thermal Considerations for TMS320DM64xx, TMS320DM64x, and TMS320C6000 Devices* Application Report (literature number SPRAAL9).

7.1 Thermal Data for ZWT

Table 7-1. Thermal Resistance Characteristics (PBGA Package) [ZWT]

NO.			°C/W(1)	AIR FLOW (m/s)(2)
1	$R\Theta_{JC}$	Junction-to-case	5.4	N/A
2	$R\Theta_{JB}$	Junction-to-board	16.0	N/A
3	$R\Theta_{JA}$	Junction-to-free air	26.6	0.00
4			21.9	1.0
5			20.4	2.00
7	Psi_{JT}	Junction-to-package top	0.0	0.00
8			0.1	1.0
9			0.2	2.00
11	Psi_{JB}	Junction-to-board	15.9	0.00
12			15.8	1.0
13			15.3	2.00

(1) The junction-to-case measurement was conducted in a JEDEC defined 1S0P system. Other measurements were conducted in a JEDEC defined 1S2P system and will change based on environment as well as application.
For more information, see these three EIA/JEDEC standards:

- EIA/JESD51-2, *Integrated Circuits Thermal Test Method Environment Conditions - Natural Convection (Still Air)*
- EIA/JESD51-3, *Low Effective Thermal Conductivity Test Board for Leaded Surface Mount Packages*
- JESD51-7, *High Effective Thermal Conductivity Test Board for Leaded Surface Mount Packages*

.

(2) m/s = meters per second

7.1.1 Thermal Data for ZDU

Table 7-2. Thermal Resistance Characteristics (PBGA Package) [ZDU]

NO.			°C/W(1)	AIR FLOW (m/s)(2)
1	$R\Theta_{JC}$	Junction-to-case	7.7	N/A
2	$R\Theta_{JB}$	Junction-to-board	10.5	N/A
3	$R\Theta_{JA}$	Junction-to-free air	19.7	0.00
4			15.5	1.0
5			14.3	2.00
7	Psi_{JT}	Junction-to-package top	4.9	0.00
8			5.1	1.0
9			5.2	2.00
11	Psi_{JB}	Junction-to-board	10.4	0.00
12			9.8	1.0
13			9.6	2.00

(1) The junction-to-case measurement was conducted in a JEDEC defined 1S0P system. Other measurements were conducted in a JEDEC defined 1S2P system and will change based on environment as well as application.
For more information, see these three EIA/JEDEC standards:
- EIA/JESD51-2, *Integrated Circuits Thermal Test Method Environment Conditions - Natural Convection (Still Air)*
- EIA/JESD51-3, *Low Effective Thermal Conductivity Test Board for Leaded Surface Mount Packages*
- JESD51-7, *High Effective Thermal Conductivity Test Board for Leaded Surface Mount Packages*

(2) m/s = meters per second

7.1.2 Packaging Information

The following packaging information and addendum reflect the most current data available for the designated device(s). This data is subject to change without notice and without revision of this document.

PACKAGING INFORMATION

Orderable part number	Status (1)	Material type (2)	Package | Pins	Package qty | Carrier	RoHS (3)	Lead finish/ Ball material (4)	MSL rating/ Peak reflow (5)	Op temp (°C)	Part marking (6)
TMS320DM6435EZWT6	Active	Production	NFBGA (ZWT) | 361	90 | JEDEC TRAY (5+1)	Yes	SNAGCU	Level-3-260C-168 HR	-	L2 DM6435EZWT TMS320
TMS320DM6435EZWT6.B	Active	Production	NFBGA (ZWT) | 361	90 | JEDEC TRAY (5+1)	Yes	SNAGCU	Level-3-260C-168 HR	0 to 90	L2 DM6435EZWT TMS320
TMS320DM6435ZDU5.B	Active	Production	BGA (ZDU) | 376	60 | JEDEC TRAY (5+1)	Yes	Call TI	Level-3-260C-168 HR	0 to 90	L2 DM6435ZDU TMS320 5
TMS320DM6435ZDU7	Active	Production	BGA (ZDU) | 376	60 | JEDEC TRAY (5+1)	Yes	SNAGCU	Level-3-260C-168 HR	0 to 90	L2 DM6435ZDU TMS320 7
TMS320DM6435ZDU7.B	Active	Production	BGA (ZDU) | 376	60 | JEDEC TRAY (5+1)	Yes	SNAGCU	Level-3-260C-168 HR	0 to 90	L2 DM6435ZDU TMS320 7
TMS320DM6435ZWT4	Active	Production	NFBGA (ZWT) | 361	90 | JEDEC TRAY (5+1)	Yes	SNAGCU	Level-3-260C-168 HR	0 to 90	L2 DM6435ZWT TMS320 4
TMS320DM6435ZWT4.B	Active	Production	NFBGA (ZWT) | 361	90 | JEDEC TRAY (5+1)	Yes	SNAGCU	Level-3-260C-168 HR	0 to 90	L2 DM6435ZWT TMS320 4
TMS320DM6435ZWT5	Active	Production	NFBGA (ZWT) | 361	90 | JEDEC TRAY (5+1)	Yes	SNAGCU	Level-3-260C-168 HR	0 to 0	L2 DM6435ZWT TMS320 5
TMS320DM6435ZWT5.B	Active	Production	NFBGA (ZWT) | 361	90 | JEDEC TRAY (5+1)	Yes	SNAGCU	Level-3-260C-168 HR	0 to 0	L2 DM6435ZWT TMS320 5

Orderable part number	Status (1)	Material type (2)	Package | Pins	Package qty | Carrier	RoHS (3)	Lead finish/ Ball material (4)	MSL rating/ Peak reflow (5)	Op temp (°C)	Part marking (6)
TMS320DM6435ZWT5CX	Active	Production	NFBGA (ZWT) | 361	90 | JEDEC TRAY (5+1)	Yes	SNAGCU	Level-3-260C-168 HR	0 to 0	L2 DM6435ZWT TMS320 5
TMS320DM6435ZWT6	Active	Production	NFBGA (ZWT) | 361	90 | JEDEC TRAY (5+1)	Yes	SNAGCU	Level-3-260C-168 HR	0 to 90	L2 DM6435ZWT TMS320
TMS320DM6435ZWT6.B	Active	Production	NFBGA (ZWT) | 361	90 | JEDEC TRAY (5+1)	Yes	SNAGCU	Level-3-260C-168 HR	0 to 90	L2 DM6435ZWT TMS320
TMS320DM6435ZWT6CX	Active	Production	NFBGA (ZWT) | 361	90 | JEDEC TRAY (5+1)	Yes	SNAGCU	Level-3-260C-168 HR	0 to 90	L2 DM6435ZWT TMS320
TMS320DM6435ZWT7	Active	Production	NFBGA (ZWT) | 361	90 | JEDEC TRAY (5+1)	Yes	SNAGCU	Level-3-260C-168 HR	-	L2 DM6435ZWT TMS320 7
TMS320DM6435ZWT7.B	Active	Production	NFBGA (ZWT) | 361	90 | JEDEC TRAY (5+1)	Yes	SNAGCU	Level-3-260C-168 HR	0 to 90	L2 DM6435ZWT TMS320 7
TMS320DM6435ZWTL	Active	Production	NFBGA (ZWT) | 361	90 | JEDEC TRAY (5+1)	Yes	SNAGCU	Level-3-260C-168 HR	-	L2 DM6435ZWTL TMS320
TMS320DM6435ZWTL.B	Active	Production	NFBGA (ZWT) | 361	90 | JEDEC TRAY (5+1)	Yes	SNAGCU	Level-3-260C-168 HR	0 to 90	L2 DM6435ZWTL TMS320
TMS320DM6435ZWTQ5	Active	Production	NFBGA (ZWT) | 361	90 | JEDEC TRAY (5+1)	Yes	SNAGCU	Level-3-260C-168 HR	-40 to 125	L1 DM6435ZWTQ TMS320 5
TMS320DM6435ZWTQ5.B	Active	Production	NFBGA (ZWT) | 361	90 | JEDEC TRAY (5+1)	Yes	SNAGCU	Level-3-260C-168 HR	-40 to 125	L1 DM6435ZWTQ TMS320 5

Orderable part number	Status (1)	Material type (2)	Package | Pins	Package qty | Carrier	RoHS (3)	Lead finish/ Ball material (4)	MSL rating/ Peak reflow (5)	Op temp (°C)	Part marking (6)
TMS320DM6435ZWTQ6	Active	Production	NFBGA (ZWT) | 361	90 | JEDEC TRAY (5+1)	Yes	SNAGCU	Level-3-260C-168 HR	-	L1 DM6435ZWTQ TMS320 6
TMS320DM6435ZWTQ6.B	Active	Production	NFBGA (ZWT) | 361	90 | JEDEC TRAY (5+1)	Yes	SNAGCU	Level-3-260C-168 HR	-40 to 125	L1 DM6435ZWTQ TMS320 6
TNETV6435INZWTQ5	Active	Production	NFBGA (ZWT) | 361	90 | JEDEC TRAY (5+1)	Yes	SNAGCU	Level-3-260C-168 HR	-40 to 125	L1 DM6435ZWTQ TMS320 5

(1) **Status:** For more details on status, see our product life cycle.

(2) **Material type:** When designated, preproduction parts are prototypes/experimental devices, and are not yet approved or released for full production. Testing and final process, including without limitation quality assurance, reliability performance testing, and/or process qualification, may not yet be complete, and this item is subject to further changes or possible discontinuation. If available for ordering, purchases will be subject to an additional waiver at checkout, and are intended for early internal evaluation purposes only. These items are sold without warranties of any kind.

(3) **RoHS values:** Yes, No, RoHS Exempt. See the TI RoHS Statement for additional information and value definition.

(4) **Lead finish/Ball material:** Parts may have multiple material finish options. Finish options are separated by a vertical ruled line. Lead finish/Ball material values may wrap to two lines if the finish value exceeds the maximum column width.

(5) **MSL rating/Peak reflow:** The moisture sensitivity level ratings and peak solder (reflow) temperatures. In the event that a part has multiple moisture sensitivity ratings, only the lowest level per JEDEC standards is shown. Refer to the shipping label for the actual reflow temperature that will be used to mount the part to the printed circuit board.

(6) **Part marking:** There may be an additional marking, which relates to the logo, the lot trace code information, or the environmental category of the part.

Multiple part markings will be inside parentheses. Only one part marking contained in parentheses and separated by a "~" will appear on a part. If a line is indented then it is a continuation of the previous line and the two combined represent the entire part marking for that device.

Important Information and Disclaimer: The information provided on this page represents TI's knowledge and belief as of the date that it is provided. TI bases its knowledge and belief on information provided by third parties, and makes no representation or warranty as to the accuracy of such information. Efforts are underway to better integrate information from third parties. TI has taken and continues to take reasonable steps to provide representative and accurate information but may not have conducted destructive testing or chemical analysis on incoming materials and chemicals. TI and TI suppliers consider certain information to be proprietary, and thus CAS numbers and other limited information may not be available for release.

In no event shall TI's liability arising out of such information exceed the total purchase price of the TI part(s) at issue in this document sold by TI to Customer on an annual basis.

TRAY

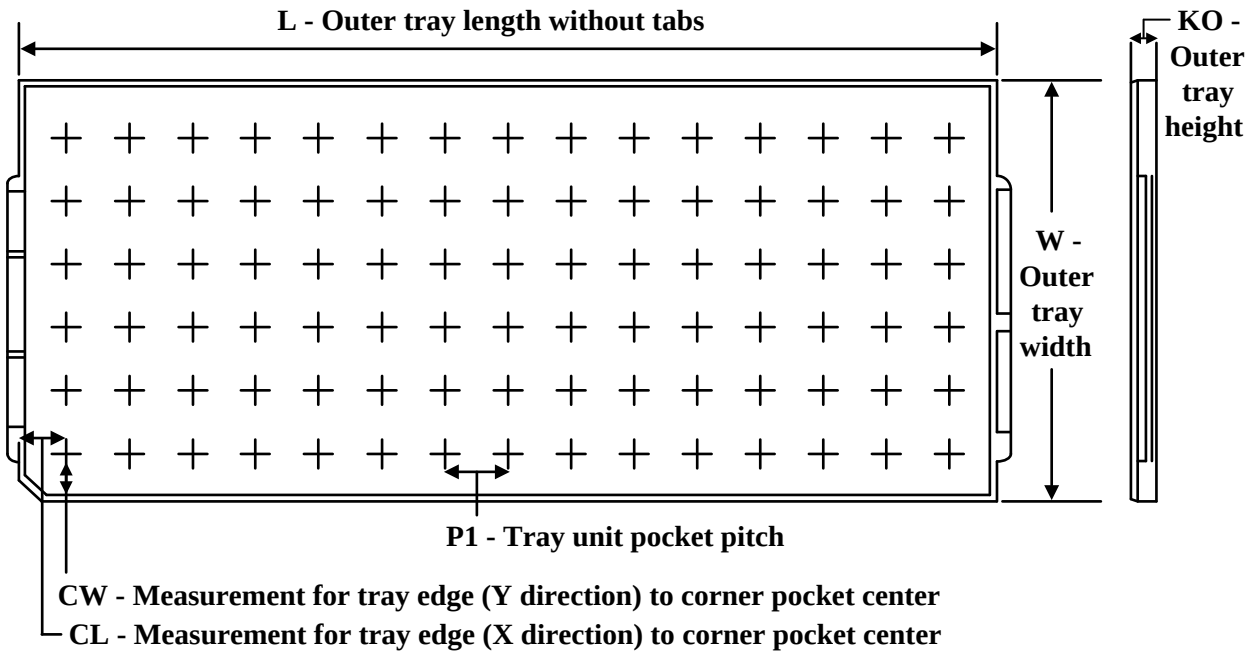

Chamfer on Tray corner indicates Pin 1 orientation of packed units.

*All dimensions are nominal

Device	Package Name	Package Type	Pins	SPQ	Unit array matrix	Max temperature (°C)	L (mm)	W (mm)	K0 (µm)	P1 (mm)	CL (mm)	CW (mm)
TMS320DM6435EZWT6	ZWT	NFBGA	361	90	6 X 15	150	315	135.9	7620	20	17.5	15.45
TMS320DM6435EZWT6.B	ZWT	NFBGA	361	90	6 X 15	150	315	135.9	7620	20	17.5	15.45
TMS320DM6435ZDU5.B	ZDU	BGA	376	60	5 X 12	150	315	135.9	7620	25.5	17.25	16.95
TMS320DM6435ZDU7	ZDU	BGA	376	60	5 X 12	150	315	135.9	7620	25.5	17.25	16.95
TMS320DM6435ZDU7.B	ZDU	BGA	376	60	5 X 12	150	315	135.9	7620	25.5	17.25	16.95
TMS320DM6435ZWT4	ZWT	NFBGA	361	90	6 X 15	150	315	135.9	7620	20	17.5	15.45
TMS320DM6435ZWT4.B	ZWT	NFBGA	361	90	6 X 15	150	315	135.9	7620	20	17.5	15.45
TMS320DM6435ZWT5	ZWT	NFBGA	361	90	6 X 15	150	315	135.9	7620	20	17.5	15.45
TMS320DM6435ZWT5.B	ZWT	NFBGA	361	90	6 X 15	150	315	135.9	7620	20	17.5	15.45
TMS320DM6435ZWT5CX	ZWT	NFBGA	361	90	6 X 15	150	315	135.9	7620	20	17.5	15.45
TMS320DM6435ZWT6	ZWT	NFBGA	361	90	6 X 15	150	315	135.9	7620	20	17.5	15.45
TMS320DM6435ZWT6.B	ZWT	NFBGA	361	90	6 X 15	150	315	135.9	7620	20	17.5	15.45
TMS320DM6435ZWT6CX	ZWT	NFBGA	361	90	6 X 15	150	315	135.9	7620	20	17.5	15.45
TMS320DM6435ZWT7	ZWT	NFBGA	361	90	6 X 15	150	315	135.9	7620	20	17.5	15.45
TMS320DM6435ZWT7.B	ZWT	NFBGA	361	90	6 X 15	150	315	135.9	7620	20	17.5	15.45
TMS320DM6435ZWTL	ZWT	NFBGA	361	90	6 X 15	150	315	135.9	7620	20	17.5	15.45
TMS320DM6435ZWTL.B	ZWT	NFBGA	361	90	6 X 15	150	315	135.9	7620	20	17.5	15.45

Device	Package Name	Package Type	Pins	SPQ	Unit array matrix	Max temperature (°C)	L (mm)	W (mm)	K0 (µm)	P1 (mm)	CL (mm)	CW (mm)
TMS320DM6435ZWTQ5	ZWT	NFBGA	361	90	6 X 15	150	315	135.9	7620	20	17.5	15.45
TMS320DM6435ZWTQ5.B	ZWT	NFBGA	361	90	6 X 15	150	315	135.9	7620	20	17.5	15.45
TMS320DM6435ZWTQ6	ZWT	NFBGA	361	90	6 X 15	150	315	135.9	7620	20	17.5	15.45
TMS320DM6435ZWTQ6.B	ZWT	NFBGA	361	90	6 X 15	150	315	135.9	7620	20	17.5	15.45
TNETV6435INZWTQ5	ZWT	NFBGA	361	90	6 X 15	150	315	135.9	7620	20	17.5	15.45

ZDU (S–PBGA–N376) PLASTIC BALL GRID ARRAY

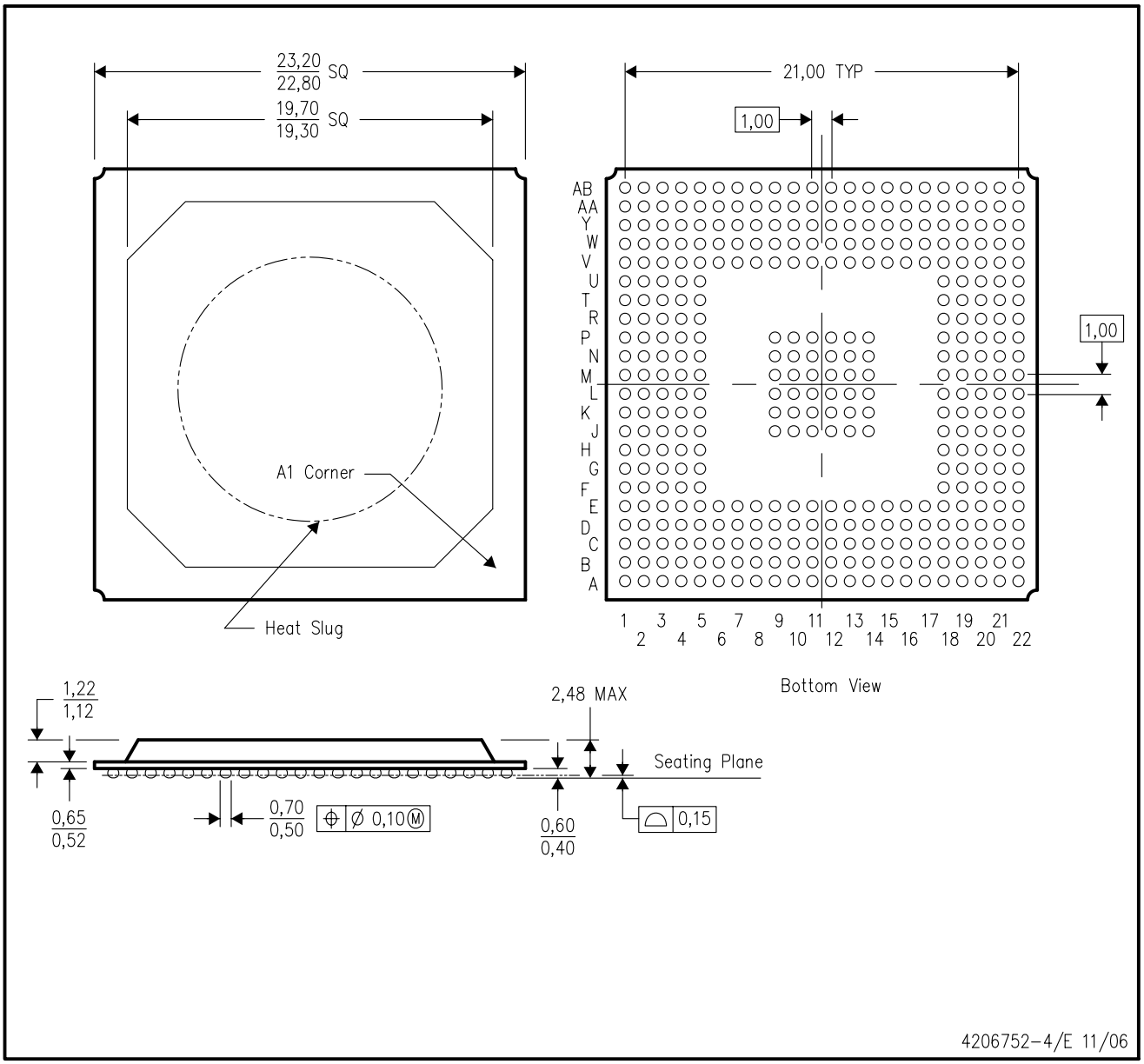

NOTES:
- A. All linear dimensions are in millimeters.
- B. This drawing is subject to change without notice.
- C. Falls within JEDEC MO–151
- D. Thermally enhanced molded plastic package with heat slug (HSL).
- E. This is a lead–free solder ball design.

ZWT (S–PBGA–N361) PLASTIC BALL GRID ARRAY

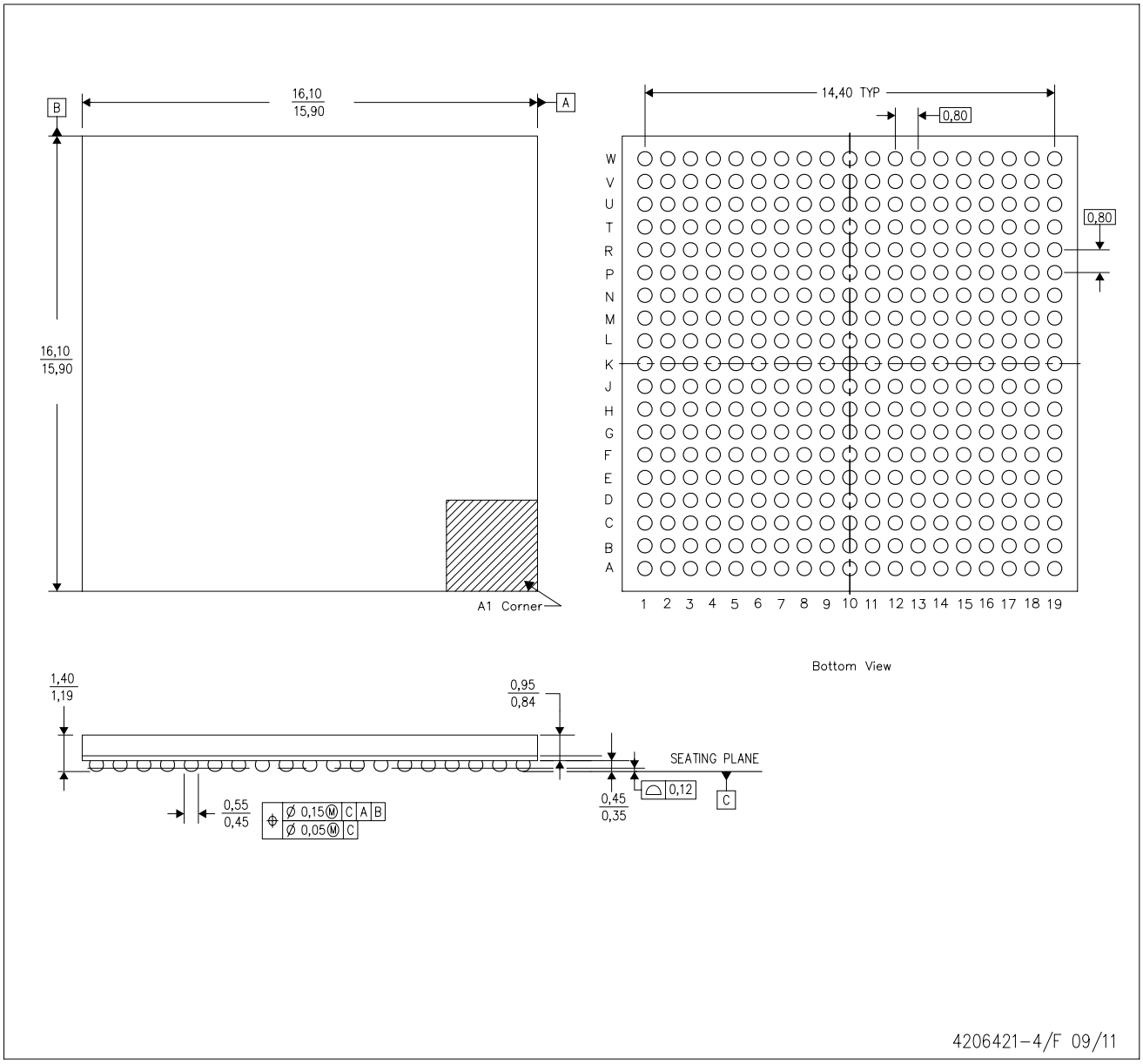

NOTES:
A. All linear dimensions are in millimeters. Dimensioning and tolerancing per ASME Y14.5M–1994.
B. This drawing is subject to change without notice.
C. This is a Pb–free solder ball design.
D. Falls within JEDEC MO–275.

IMPORTANT NOTICE AND DISCLAIMER

TI PROVIDES TECHNICAL AND RELIABILITY DATA (INCLUDING DATA SHEETS), DESIGN RESOURCES (INCLUDING REFERENCE DESIGNS), APPLICATION OR OTHER DESIGN ADVICE, WEB TOOLS, SAFETY INFORMATION, AND OTHER RESOURCES “AS IS” AND WITH ALL FAULTS, AND DISCLAIMS ALL WARRANTIES, EXPRESS AND IMPLIED, INCLUDING WITHOUT LIMITATION ANY IMPLIED WARRANTIES OF MERCHANTABILITY, FITNESS FOR A PARTICULAR PURPOSE OR NON-INFRINGEMENT OF THIRD PARTY INTELLECTUAL PROPERTY RIGHTS.

These resources are intended for skilled developers designing with TI products. You are solely responsible for (1) selecting the appropriate TI products for your application, (2) designing, validating and testing your application, and (3) ensuring your application meets applicable standards, and any other safety, security, regulatory or other requirements.

These resources are subject to change without notice. TI grants you permission to use these resources only for development of an application that uses the TI products described in the resource. Other reproduction and display of these resources is prohibited. No license is granted to any other TI intellectual property right or to any third party intellectual property right. TI disclaims responsibility for, and you will fully indemnify TI and its representatives against, any claims, damages, costs, losses, and liabilities arising out of your use of these resources.

TI’s products are provided subject to TI’s Terms of Sale or other applicable terms available either on ti.com or provided in conjunction with such TI products. TI’s provision of these resources does not expand or otherwise alter TI’s applicable warranties or warranty disclaimers for TI products.

TI objects to and rejects any additional or different terms you may have proposed.

Mailing Address: Texas Instruments, Post Office Box 655303, Dallas, Texas 75265
Copyright © 2025, Texas Instruments Incorporated