LM3492/-Q1 Two-Channel Individual Dimmable LED Driver With Boost Converter and Fast Current Regulator

1 Features

- **Boost Converter:**
  - LM3492-Q1 is an Automotive Grade Product That is AEC Q100 Grade 1 Qualified
  - Very Wide Input Voltage Ranged From 4.5 V to 65 V
  - Programmable Soft Start
  - No Loop Compensation Required
  - Stable With Ceramic and Other Low ESR Capacitors With No Audible Noise
  - Nearly Constant Switching Frequency Programmable From 200 kHz to 1 MHz
- **Current Regulators:**
  - Programmable LED Current from 50 mA to 200 mA
  - 1000:1 Contrast Ratio at a Dimming Frequency of More Than 3 kHz, Minimum LED Current Pulse Width is 300 ns
  - Two Individual Dimmable LED Strings up to 65 V, Total 15 W (Typically 28 LEDs at 150 mA)
  - Dynamic Headroom Control Maximizes Efficiency
  - Over-Power Protection
  - ±3% Current Accuracy
- **Supervisory Functions:**
  - Precision Enable
  - COMM I/O Pin for Diagnostic and Commands
  - Thermal Shutdown Protection
  - Thermally Enhanced 20-Pin HTSSOP package

2 Applications

- Ultra-High Contrast Ratio 6.5”-10” LCD Display Backlight up to 28 LEDs
- Automotive or Marine GPS Displays

3 Description

The LM3492/-Q1 integrates a boost converter and a two-channel current regulator to implement a high efficient and cost effective LED driver for driving two individually dimmable LED strings with a maximum power of 15 W and an output voltage of up to 65 V. The boost converter employs a proprietary Projected-On-Time control method to give a fast transient response with no compensation required, and a nearly constant switching frequency programmable from 200 kHz to 1 MHz. The application circuit is stable with ceramic capacitors and produces no audible noise on dimming. The programmable peak current limit and soft-start features reduce current surges at start-up, and an integrated 190 mΩ, 3.9-A N-Channel MOSFET switch minimizes the solution size.

Device Information(1)

PART NUMBER	PACKAGE	BODY SIZE (NOM)
LM3492	HTSSOP (20)	7.80 mm × 4.40 mm
LM3492-Q1		

(1) For all available packages, see the orderable addendum at the end of the data sheet.

Typical Application

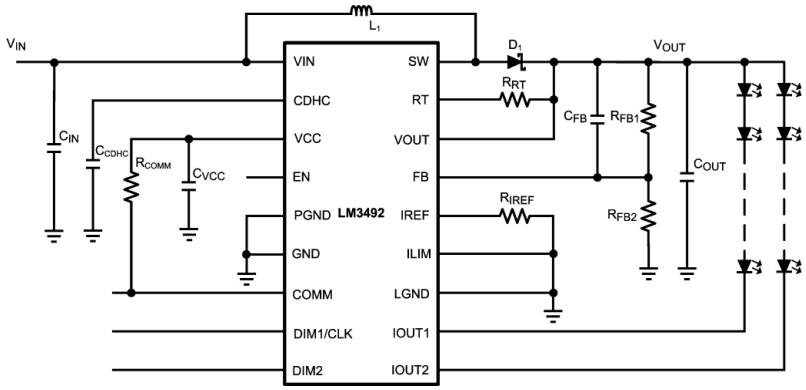

Copyright © 2016, Texas Instruments Incorporated

An IMPORTANT NOTICE at the end of this data sheet addresses availability, warranty, changes, use in safety-critical applications, intellectual property matters and other important disclaimers. PRODUCTION DATA.

Table of Contents

1 Features ... 1
2 Applications ... 1
3 Description ... 1
4 Revision History ... 2
5 Description (continued) ... 3
6 Pin Configuration and Functions ... 4
7 Specifications ... 5
7.1 Absolute Maximum Ratings ... 5
7.2 ESD Ratings ... 5
7.3 Recommended Operating Conditions ... 5
7.4 Thermal Information ... 5
7.5 Electrical Characteristics ... 6
7.6 Typical Characteristics ... 8
8 Detailed Description ... 11
8.1 Overview ... 11
8.2 Functional Block Diagram ... 12
8.3 Feature Description ... 12
8.4 Device Functional Modes ... 18
8.5 Programming ... 18
9 Application and Implementation ... 20
9.1 Application Information ... 20
9.2 Typical Application ... 20
10 Power Supply Recommendations ... 23
11 Layout ... 23
11.1 Layout Guidelines ... 23
11.2 Layout Example ... 23
12 Device and Documentation Support ... 24
12.1 Documentation Support ... 24
12.2 Related Links ... 24
12.3 Receiving Notification of Documentation Updates 24
12.4 Community Resources ... 24
12.5 Trademarks ... 24
12.6 Electrostatic Discharge Caution ... 24
12.7 Glossary ... 24
13 Mechanical, Packaging, and Orderable Information ... 25

4 Revision History

NOTE: Page numbers for previous revisions may differ from page numbers in the current version.

Changes from Revision C (May 2013) to Revision D	Page
• Added Added *ESD Ratings* table, *Thermal Information* table, *Feature Description* section, *Device Functional Modes*, *Application and Implementation* section, *Power Supply Recommendations* section, *Layout* section, *Device and Documentation Support* section, and *Mechanical, Packaging, and Orderable Information* section	1
• Changed $R_{\theta JA}$ value from 32.7 to 36.5 in the *Thermal Information* table	5

Changes from Revision B (May 2013) to Revision C	Page
• Changed layout of National Data Sheet to TI format	20

Copyright © 2010–2016, Texas Instruments Incorporated

5 Description (continued)

The fast slew rate current regulator allows high frequency and narrow pulse width dimming signals to achieve a very high contrast ratio of 1000:1 at a dimming frequency of more than 3 kHz. The LED current is programmable from 50 mA to 200 mA by a single resistor.

To maximize the efficiency, Dynamic Headroom Control (DHC) automatically adjusts the output voltage to a minimum. DHC also facilitates a single BOM for different number of LED in a string, which is required for backlight panels of different size, thereby reducing overall development time and cost. The LM3492/-Q1 comes with a versatile COMM pin which serves as a bidirectional I/O pin interfacing with an external MCU for the following functions: power-good, overtemperature, IOUT overvoltage and undervoltage indications, switching frequency tuning, and channel 1 disabling. Other supervisory functions of the LM3492/-Q1 include precise enable, VCC undervoltage lockout, current regulator over-power protection, and thermal shutdown protection. The LM3492/-Q1 is available in the thermally enhanced 20-pin HTSSOP package.

Copyright © 2010–2016, Texas Instruments Incorporated

6 Pin Configuration and Functions

PWP PowerPAD™ Package
20-Pin HTSSOP
Top View

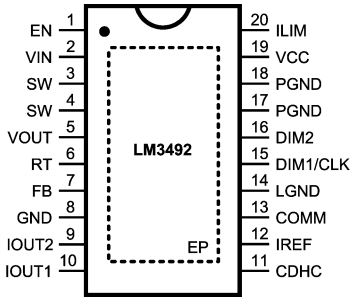

Pin Functions

PIN		I/O	DESCRIPTION	APPLICATION INFORMATION
NO.	NAME			
1	EN	I	Enable	Internally pullup. Connect to a voltage higher than 1.63 V to provide precision enable for the device.
2	VIN	I	Input Supply Voltage	Supply pin to the device. Input range is 4.5 V to 65 V.
3	SW	I	Switch Node	Internally connected to the drain of the integrated MOSFET.
4				
5	VOUT	I	Output Voltage Sense	Sense the output voltage for nearly constant switching frequency control.
6	RT	I	Frequency Control	An external resistor from the VOUT pin to this pin sets the switching frequency.
7	FB	I	Output Voltage Feedback	The output voltage is connected to this pin through a feedback resistor divider for output voltage regulation. The voltage of this pin is from 1.05 V to 2.5 V.
8	GND	G	Analog Ground	Signal ground
9	IOUT2	I	Current Regulator Input of Channel 2	Input of the current regulator of channel 2. The regulated current is programmable (refer to the IREF pin).
10	IOUT1	I	Current Regulator Input of Channel 1	Input of the current regulator of channel 1. The regulated current is programmable (refer to the IREF pin).
11	CDHC	I	Dynamic Headroom Control	An external capacitor connected to this pin sets the DHC sensitivity. At start-up, a 120-µA internal current source charges an external capacitor to provide a soft-start function.
12	IREF	I	Current Setting of the Current Regulator	An external resistor connected from this pin to ground programs the regulated current of the current regulator of channels 1 and 2.
13	COMM	I/O	Bidirectional Logic Communication	This pin is open drain for various indications (power-good, overtemperature, IOUT overvoltage and undervoltage) and command sending (switching frequency tuning and channel 1 disabling).
14	LGND	G	Ground of the Current Regulator	Current regulator ground. Must be connected to the GND pin for normal operation. The LGND and GND pins are not internally connected.
15	DIM1/CLK	I/O	Dimming Control of Channel 1	Control the ON/OFF of the current regulator of channel 1. This pin is internally pulled low by a 5-µA current. This pin also serves as a clock signal for latching input/output data of the COMM pin.
16	DIM2	I	Dimming Control of Channel 2	Control the ON/OFF of the current regulator of channel 2. This pin is internally pulled low by a 5-µA current.
17	PGND	G	Power Ground	Integrated MOSFET ground. Must be connected to the GND pin for normal operation. The PGND and GND pins are not internally connected.
18				
19	VCC	O	LDO Regulator Output	Nominally regulated to 5.5 V. Connect a capacitor of larger than 0.47 µF between the VCC and GND pins.
20	ILIM	I	Peak Current Limit Adjust	Connect an external resistor from the ILIM pin to the VCC pin reduces peak current limit. Connect the ILIM pin to the ground to obtain the maximum current limit.
DAP	DAP	—	Exposed Pad	Thermal connection pad. Connect to a ground plane.

Copyright © 2010–2016, Texas Instruments Incorporated

7 Specifications

7.1 Absolute Maximum Ratings

over operating free-air temperature range (unless otherwise noted)[1]

		MIN	MAX	UNIT
Input voltage	VIN, RT, VOUT to GND	−0.3	67	V
	SW to GND	−0.3	67	
	SW to GND (Transient)		−2 (<100 ns)	
Output voltage	ILIM to GND	−0.3	0.3	V
	FB to GND	−0.3	5	
	COMM, DIM1, DIM2, to GND	–0.3	6	
Junction temperature, T_J		150	150	°C
Storage temperature, T_{stg}		−65	150	°C

(1) Stresses beyond those listed under *Absolute Maximum Ratings* may cause permanent damage to the device. These are stress ratings only, which do not imply functional operation of the device at these or any other conditions beyond those indicated under *Recommended Operating Conditions*. Exposure to absolute-maximum-rated conditions for extended periods may affect device reliability.

7.2 ESD Ratings

			VALUE	UNIT
$V_{(ESD)}$	Electrostatic discharge	Human body model (HBM), per ANSI/ESDA/JEDEC JS-001[1]	±2000	V
		Charged-device model (CDM), per JEDEC specification JESD22-C101[2]	±750	

(1) JEDEC document JEP155 states that 500-V HBM allows safe manufacturing with a standard ESD control process.
(2) JEDEC document JEP157 states that 250-V CDM allows safe manufacturing with a standard ESD control process.

7.3 Recommended Operating Conditions

over operating free-air temperature range (unless otherwise noted)

	MIN	MAX	UNIT
Supply voltage, VIN	4.5	65	V
Operation temperature, T_A	–40	125	°C

7.4 Thermal Information

THERMAL METRIC[1]		LM3492, LM3492-Q1 PWP (HTSSOP) 20 PINS	UNIT
$R_{\theta JA}$	Junction-to-ambient thermal resistance	36.5	°C/W
$R_{\theta JC(top)}$	Junction-to-case (top) thermal resistance	20.8	°C/W
$R_{\theta JB}$	Junction-to-board thermal resistance	17.5	°C/W
ψ_{JT}	Junction-to-top characterization parameter	0.5	°C/W
ψ_{JB}	Junction-to-board characterization parameter	17.4	°C/W
$R_{\theta JC(bot)}$	Junction-to-case (bottom) thermal resistance	2	°C/W

(1) For more information about traditional and new thermal metrics, see the *Semiconductor and IC Package Thermal Metrics* application report.

7.5 Electrical Characteristics

over operating free-air temperature range, V_{IN} = 12 V (unless otherwise noted)

PARAMETER		TEST CONDITIONS	MIN	TYP	MAX	UNIT
START-UP REGULATOR (VCC PIN)						
V_{VCC}	Output voltage	C_{VCC} = 0.47 µF, no load	4.7	5.5	6.3	V
		I_{VCC} = 2 mA	4.7	5.5	6.3	V
V_{CC_UVLO}	VCC pin undervoltage lockout threshold (UVLO)	V_{VCC} increasing, $T_A = T_J$ = 25°C	3.56	3.78	4	V
$V_{CC_UVLO\text{-}HYS}$	VCC pin UVLO hysteresis	V_{VCC} decreasing		310		mV
I_{IN}	I_{IN} operating current	No switching, V_{FB} = 0 V		3.6	5.2	mA
$I_{IN\text{-}SD}$	I_{IN} operating current, device shutdown	V_{EN} = 0 V		30	95	µA
I_{VCC}	VCC pin current limit (1)	V_{VCC} = 0 V	18	30		mA
$V_{CC\text{-}VOUT}$	VCC pin output voltage when supplied by VOUT	V_{IN} = Open, I_{VCC} = 1 mA, V_{OUT} = 18 V, $T_A = T_J$ = 25°C	3.5	4.1	4.7	V
ENABLE INPUT						
V_{EN}	EN pin input threshold	V_{EN} rising	1.55	1.63	1.71	V
$V_{EN\text{-}HYS}$	EN pin threshold hysteresis	V_{EN} falling		194		mV
$I_{EN\text{-}SHUT}$	Enable pullup current at shutdown	V_{EN} = 0 V		2		µA
$I_{EN\text{-}OPER}$	Enable pullup current during operation	V_{EN} = 2 V		40		µA
CURRENT REGULATOR						
V_{IREF}	IREF pin voltage	4.5 V ≤ V_{IN} ≤ 65 V	1.231	1.256	1.281	V
V_{DHC50}	V_{IOUT} under DHC	I_{OUT} = 50 mA, R_{IREF} = 25 kΩ	0.16	0.225	0.29	V
V_{DHC100}		I_{OUT} = 100 mA, R_{IREF} = 12.5 kΩ	0.38	0.48	0.58	
V_{DHC200}		I_{OUT} = 200 mA, R_{IREF} = 6.25 kΩ	0.81	0.99	1.17	
I_{OUT50}	Current output under DHC	$V_{IOUT} = V_{DHC50}$, R_{IREF} = 25 kΩ, $T_A = T_J$ = 25°C	47.5	50	52.5	mA
		$V_{IOUT} = V_{DHC50}$, R_{IREF} = 25 kΩ	46.5	50	53.5	
I_{OUT100}		$V_{IOUT} = V_{DHC100}$, R_{IREF} = 12.5 kΩ, $T_A = T_J$ = 25°C	97	100	103	
		$V_{IOUT} = V_{DHC100}$, R_{IREF} = 12.5 kΩ	96	100	104	
I_{OUT200}		$V_{IOUT} = V_{DHC200}$, R_{IREF} = 6.25 kΩ, $T_A = T_J$ = 25°C	194	200	206	
		$V_{IOUT} = V_{DHC200}$, R_{IREF} = 6.25 kΩ	192	200	208	
I_{OUTOFF}	Leakage at maximum work voltage	V_{DIM} = 0, V_{IOUT} = 65 V, $T_A = T_J$ = 25°C			5	µA
$V_{IOUT50\text{-}MIN}$	Minimum work voltage	I_{OUT} = 50 mA, R_{IREF} = 25 kΩ, I_{OUT} = 0.98 × I_{OUT50}, $T_A = T_J$ = 25°C		0.1	0.15	V
$V_{IOUT100\text{-}MIN}$		I_{OUT} = 100 mA, R_{IREF} = 12.5 kΩ, I_{OUT} = 0.98 × I_{OUT100}, $T_A = T_J$ = 25°C		0.2	0.35	
$V_{IOUT200\text{-}MIN}$		I_{OUT} = 200 mA, R_{IREF} = 6.25 kΩ, I_{OUT} = 0.98 × I_{OUT200}, $T_A = T_J$ = 25°C		0.4	0.65	
$V_{DIM\text{-}HIGH}$	DIM voltage HIGH		1.17			V
$V_{DIM\text{-}LOW}$	DIM voltage LOW				0.7	V
BOOST CONVERTER						
$I_{CDHC\text{-}SRC}$	CDHC pin source current	V_{CDHC} = 1.6 V, V_{FB} = 3 V, V_{IOUT} = 0 V, DIM = High		60		µA
$I_{CDHC\text{-}SINK}$	CDHC pin sink current	V_{CDHC} = 1.6 V, V_{FB} = 3 V, V_{IOUT} = 3 V, DIM = High		56		µA

(1) The VCC pin provides self bias for the internal gate drive and control circuits. Device thermal limitations limit external loading.

Copyright © 2010–2016, Texas Instruments Incorporated

Electrical Characteristics (continued)

over operating free-air temperature range, V_{IN} = 12 V (unless otherwise noted)

PARAMETER		TEST CONDITIONS	MIN	TYP	MAX	UNIT
$I_{CDHC-LEAKAGE}$	CDHC pin leakage current	DIM = Low, V_{CDHC} = 2.6 V, T_A = T_J = 25°C		5	46	nA
I_{CL-MAX}	Integrated MOSFET peak current limit threshold		3.3	3.9	4.5	A
$I_{CL-HALF}$	Half integrated MOSFET peak current limit threshold	R_{ILIM} = 11 kΩ		2		A
$R_{DS(on)}$	Integrated MOSFET On-resistance	I_{SW} = 500 mA		0.19	0.43	Ω
$V_{FBTH-PWRGD}$	Power-Good FB pin threshold			2.25		V
I_{FB}	Feedback pin input current	V_{FB} = 3 V, T_A = T_J = 25°C			1	µA
t_{ON}	ON timer pulse width	V_{IN} = 12 V, V_{OUT} = 65 V, R_{RT} = 300 kΩ		1460		ns
		V_{IN} = 24 V, V_{OUT} = 32.5 V, R_{RT} = 300 kΩ		800		
		V_{IN} = 12 V, V_{OUT} = 65 V, R_{RT} = 100 kΩ		550		
		V_{IN} = 24 V, V_{OUT} = 32.5 V, R_{RT} = 100 kΩ		350		
$t_{ON(min)ILIM}$	ON timer minimum pulse width at current limit			145		ns
t_{OFF}	OFF timer pulse width			145	350	ns
COMM PIN						
$V_{IOUT-OV}$	IOUT pin overvoltage threshold	COMM goes LOW during V_{IOUT} rising, other V_{IOUT} = 1.2 V	5.6	6.7	7.8	V
$V_{COMM-LOW}$	COMM pin at LOW	5 mA into COMM			0.7	V
$I_{LEAK-FAULT}$	COMM pin open leakage	V_{COMM} = 5 V			5	µA
THERMAL PROTECTION						
T_{OTM}	Overtemperature indication	T_J rising		135		°C
$T_{OTM-HYS}$	Overtemperature indication hysteresis	T_J falling		15		°C
T_{SD}	Thermal shutdown temperature	T_J rising		165		°C
T_{SD-HYS}	Thermal shutdown temperature hysteresis	T_J falling		20		°C

Copyright © 2010–2016, Texas Instruments Incorporated

7.6 Typical Characteristics

Unless otherwise specified the following conditions apply: T_J = 25°C, V_{IN} = 12 V with configuration in typical application circuit for I_{LED} = 200 mA shown in this data sheet.

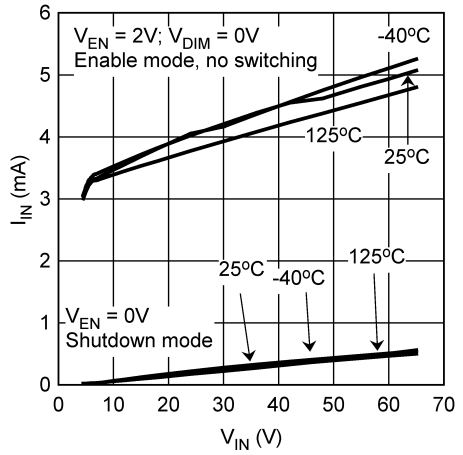

Figure 1. Quiescent Current, I_{IN} vs V_{IN}

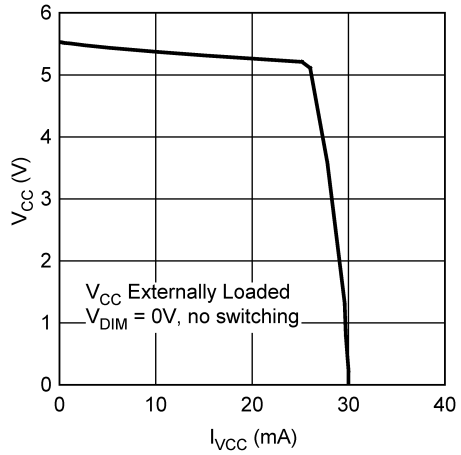

Figure 2. V_{CC} vs I_{VCC}

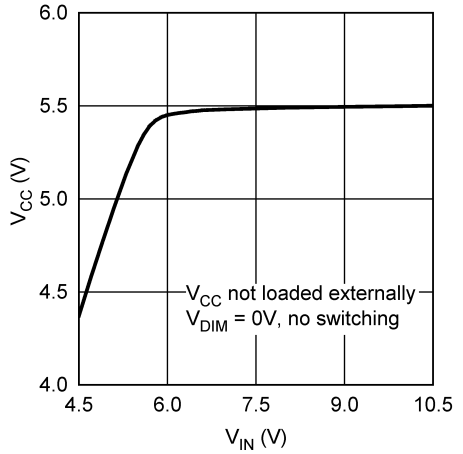

Figure 3. V_{CC} vs V_{IN}

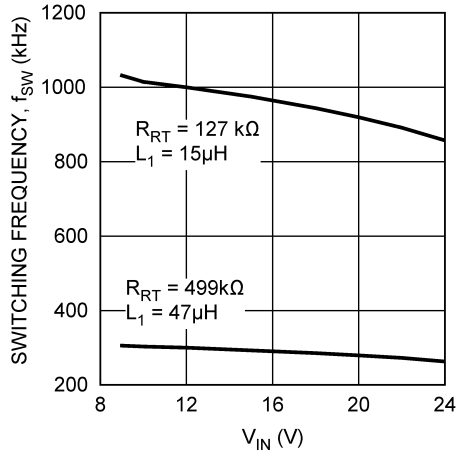

Figure 4. Switching Frequency, f_{SW} vs V_{IN}

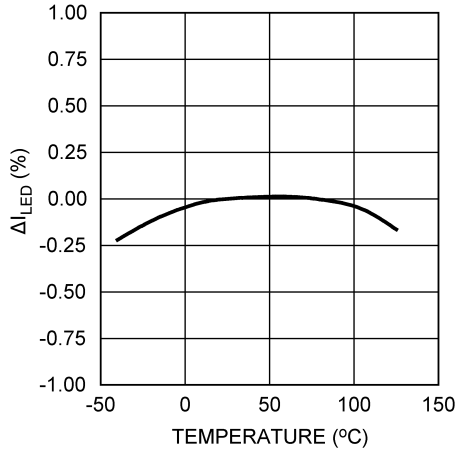

Figure 5. I_{LED} Regulation vs Temperature

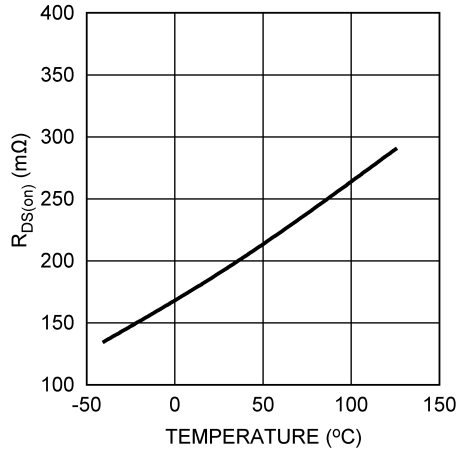

Figure 6. $R_{DS(on)}$ vs Temperature

Copyright © 2010–2016, Texas Instruments Incorporated

Typical Characteristics (continued)

Unless otherwise specified the following conditions apply: T_J = 25°C, V_{IN} = 12 V with configuration in typical application circuit for I_{LED} = 200 mA shown in this data sheet.

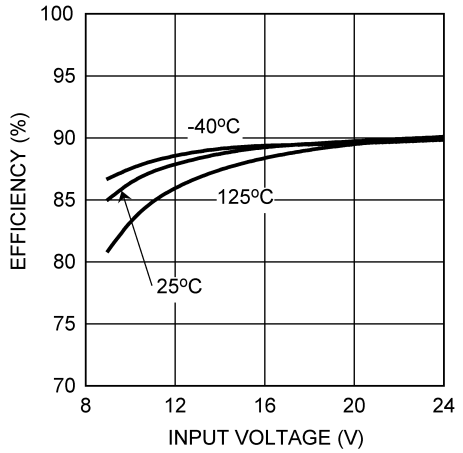

Figure 7. Efficiency vs V_{IN} (I_{LED} = 0.2 A)

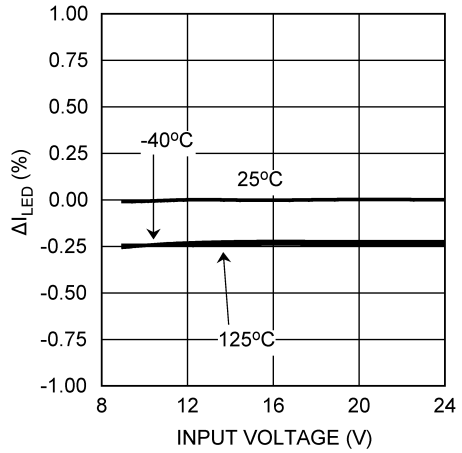

Figure 8. I_{LED} Regulation vs V_{IN} (I_{LED} = 0.2 A)

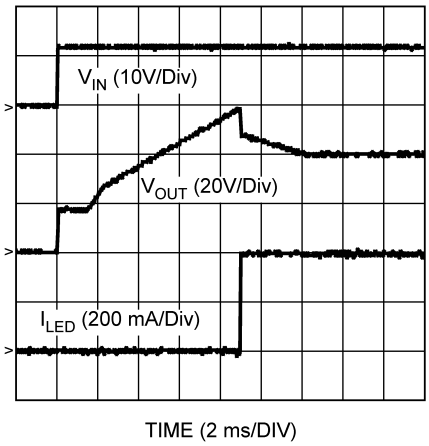

Figure 9. Power Up (I_{LED} = 0.2 A)

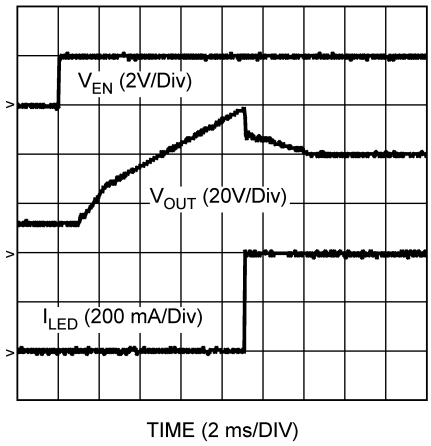

Figure 10. Enable Transient (I_{LED} = 0.2 A)

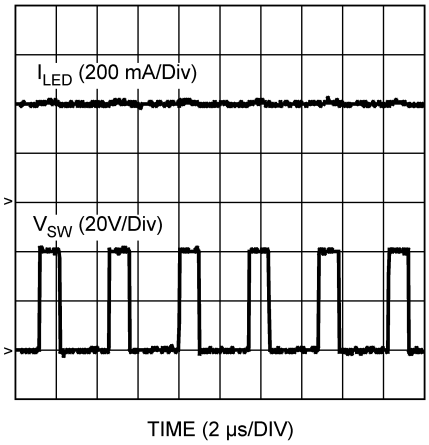

Figure 11. Steady-State Operation (I_{LED} = 0.2 A)

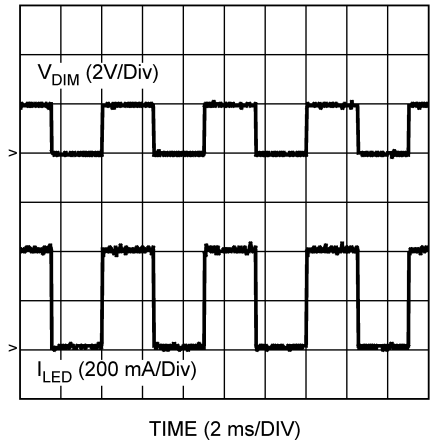

Figure 12. LED 50% Dimming (I_{LED} = 0.2 A, Dimming Frequency = 200 Hz)

Typical Characteristics (continued)

Unless otherwise specified the following conditions apply: T_J = 25°C, V_{IN} = 12 V with configuration in typical application circuit for I_{LED} = 200 mA shown in this data sheet.

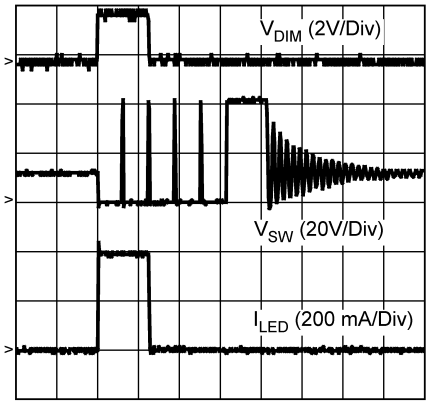

Figure 13. 1000:1 LED Dimming (I_{LED} = 0.2 A, Dimming Frequency = 200 Hz)

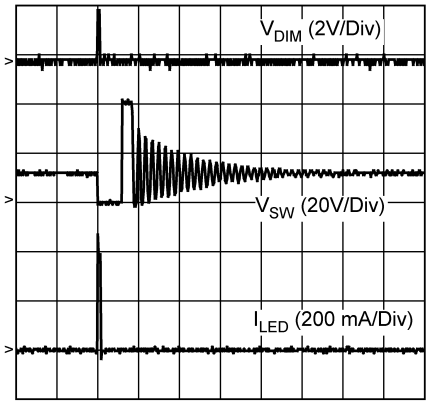

Figure 14. 300-ns LED Dimming Pulse Width (I_{LED} = 0.2 A, Dimming frequency = 3.33 kHz)

Copyright © 2010–2016, Texas Instruments Incorporated

8 Detailed Description

8.1 Overview

The LM3492/-Q1 integrates a boost converter and a two-channel current regulator to implement a high efficient and cost effective LED driver for driving two individually dimmable LED strings with a maximum power of 15 W and an output voltage of up to 65 V. The boost converter provides power for the LED strings, and the current regulator controls the dimming of the LED strings individually. The LM3492/-Q1 integrates an N-channel MOSFET switch and a two-channel current regulator to minimize the component count and solution size.

The boost converter of the LM3492/-Q1 employs a Projected On-Time (POT) control method to determine the on-time of the MOSFET with respect to the input and output voltages and an external resistor R_{RT}. During the on-period, the boost inductor is charged up, and the output capacitor is discharged to provide power to the output. A cycle-by-cycle current limit (which is 3.9 A typically and programmable by an external resistor) is imposed on the MOSFET for protection. After the on-period, the MOSFET is turned off such that the boost inductor is discharged. The next on-period is started when the voltage of the FB pin is dropped below a threshold which is determined by Dynamic Headroom Control (DHC) and is ranged from 1.05 V to 2.5 V (DHC affects the threshold only when the DIM1 and/or DIM2 pins are high). The boost converter under POT control can maintain the switching frequency nearly constant so that the switching frequency depends on only R_{RT} (Figure 15). Also, POT control requires no compensation circuit and gives a fast transient response of the output voltage.

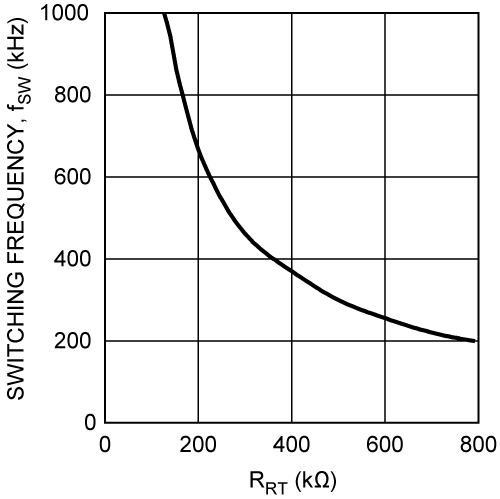

Figure 15. Switching Frequency

The two-channel current regulator of the LM3492/-Q1 is fast response so that it can allow very high contrast ratio (1000:1 at 3-kHz LED dimming frequency, minimum pulse width of the dimming signal is 300 ns). The two channels are dimmable individually. Channel 1 of the current regulator can be disabled by a digital command send through the COMM pin. In this case, the DIM1 pin can serve only as a clock signal for the data flow of the COMM pin. The power dissipated by the current regulator is adaptively minimized by Dynamic Headroom Control to maximize efficiency.

The LM3492/-Q1 can be applied in numerous applications like automotive LCD backlight panels. It can operate efficiently for inputs as high as 65 V. Diagnostic functions including power good indication, overtemperature indication, IOUT overvoltage and undervoltage indications facilitate the interface of the LM3492/-Q1 application circuit with external microprocessors (MCUs). The LM3492/-Q1 will not latch off and continue to operate in the presence of the indications. Other useful features include thermal shutdown, VCC undervoltage lockout, and precision enable. The LM3492/-Q1 is available in the thermally enhanced HTSSOP package.

Copyright © 2010–2016, Texas Instruments Incorporated

8.2 Functional Block Diagram

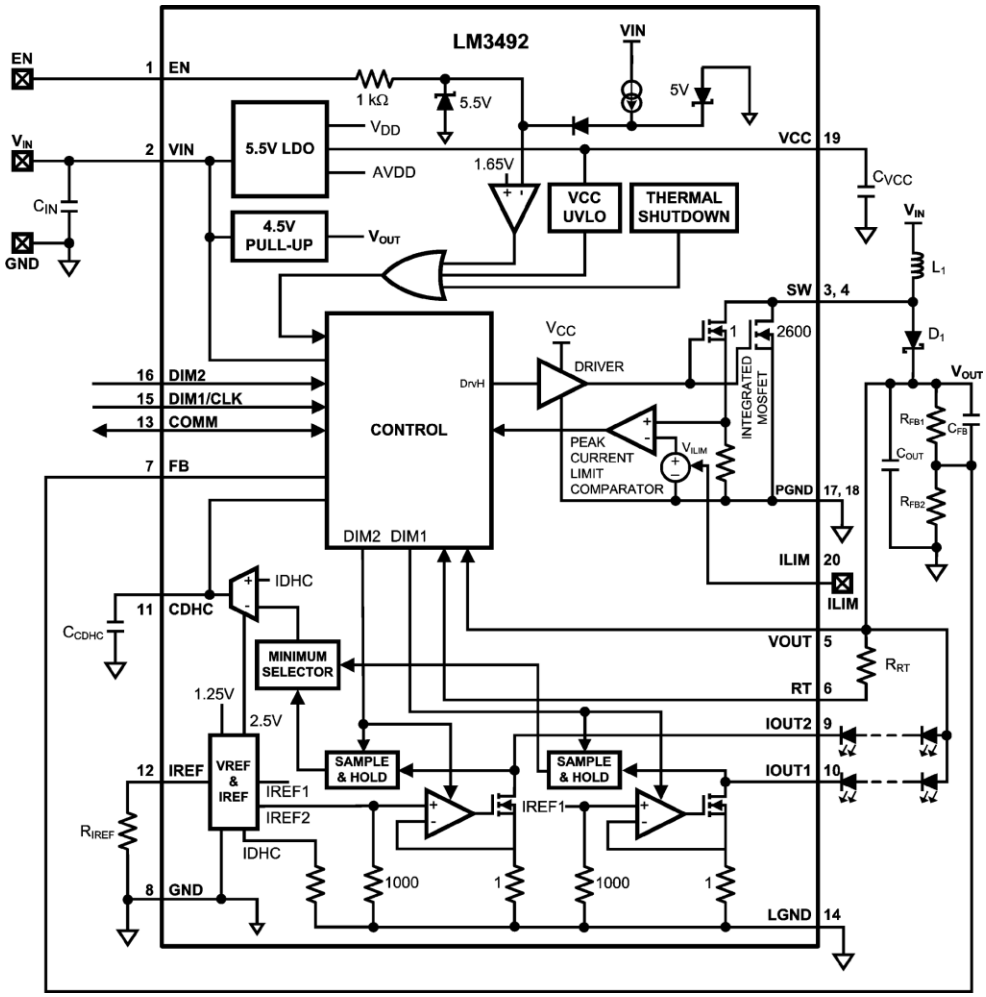

Copyright © 2016, Texas Instruments Incorporated

8.3 Feature Description

8.3.1 Switching Frequency

The boost converter of the LM3492/-Q1 device employs a projected-on-time (POT) control method to determine the on-time period of the MOSFET with respect to the input and output voltages and an external resistor R_{RT}. During the on-time period, the boost inductor charges up, and the output capacitor discharges to provide power to the output. A cycle-by-cycle current limit (which is 3.9 A typically and programmable by an external resistor) protects the MOSFET. After the on-time period, the MOSFET turns off and boost inductor discharges. The next on-time period starts when the voltage of the FB pin drops below a threshold which is determined by *dynamic headroom control* (DHC) and operates from 1.05 V to 2 V. DHC affects the threshold when either the DIM1 pin is high or the DIM2 pin is high.

During POT control operation, the boost converter maintains switching at a nearly constant frequency. During most operating conditions, the switching frequency depends on mainly the value of R_{RT} (Figure 16) but may see some variation with changes in input or output voltage. Also, POT control operation requires no compensation circuit and offers fast transient response of the output voltage. Applications that require very wide input voltage or very wide output voltage ranges may see some variation in the switching frequency as shown in Figure 17 and Figure 18.

Copyright © 2010–2016, Texas Instruments Incorporated

Feature Description (continued)

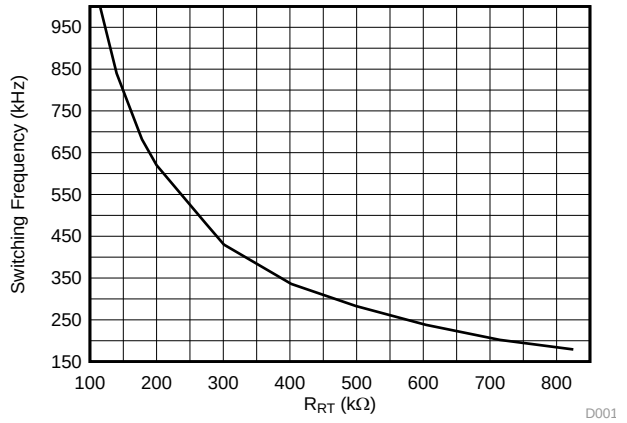

I_{LED} = 150 mA V_{OUT} = 30 V V_{VIN} = 12 V

Figure 16. Switching Frequency vs RT Resistance

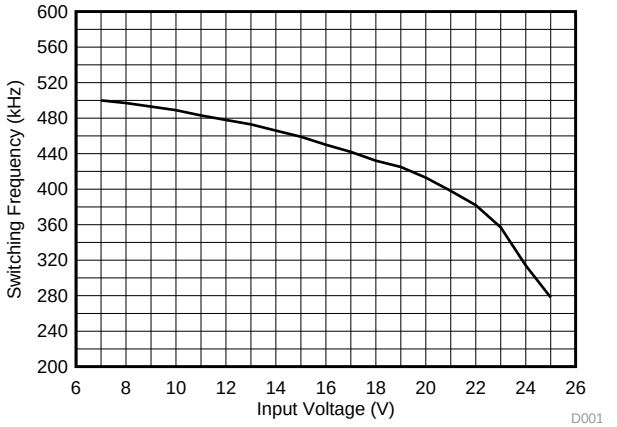

I_{LED} = 150 mA V_{OUT} = 30 V R_{RT} = 274 kΩ

Figure 17. Switching Frequency vs Input Voltage

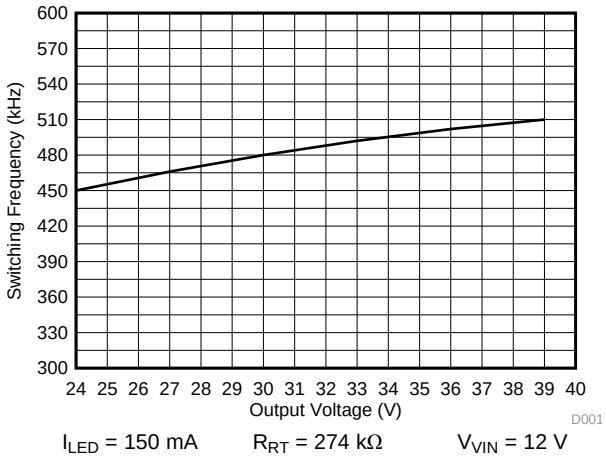

I_{LED} = 150 mA R_{RT} = 274 kΩ V_{VIN} = 12 V

Figure 18. Switching Frequency vs Output Voltage

8.3.2 LDO Regulator

The LM3492/-Q1 device offers an integrated, 5.5-V, LDO regulator. For stability, connect an external capacitor C_{VCC} of more than 0.47-µF between the VCC and GND pins. The current limit of the LDO is typically 30 mA. The LDO regulator can be used to pullup the open-drain COMM pin with an external resistor, and sources current to the ILIM pin to adjust the current limit of the integrated MOSFET. When the voltage on the VCC pin (V_{CC}) is higher than the undervoltage lockout (UVLO) threshold of 3.78 V, the device becomes enabled and the CDHC pin sources a current to charge up an external capacitor (C_{CDHC}) to provide a soft-start function.

8.3.3 Enable and Disable

To enable the LM3492/-Q1 device, the voltage on the EN pin (V_{EN}) must be higher than an enable threshold of typically 1.63 V. If the voltage on the EN pin (V_{EN}) is lower than 1.43 V, the device shuts down. In this case, the LDO regulator turns off and the CDHC pin becomes internally grounded. The EN pin internally pulls up. After enable, a 40-µA current source pulls up the EN pin. If the EN pin is connected to low such that the device is shut down, the pullup current is reduced to 2 µA. These advantages allow the device to effectively avoid false disabling by noise during operation, and minimize power consumption during shutdown. The enable threshold is so precise that it can support a UVLO function for the input voltage as shown in Figure 19. The input voltage can be connected to the EN pin through a resistor divider consisting of R_{EN1} and R_{EN2}. This circuitry ensures that the device operates after the input voltage reaches a minimum require value $V_{IN(EN)}$, as shown in Equation 1.

Feature Description (continued)

$$V_{IN(EN)} = 1.63\ V(1 + R_{EN1}/ R_{EN2}) \quad (1)$$

To maintain the V_{EN} level below the absolute maximum specification, place a Zener diode (D_{EN}) between the EN pin and GND pins.

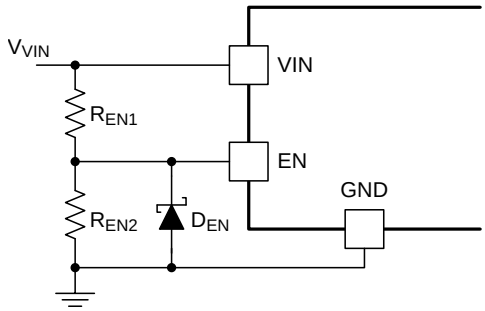

Figure 19. Input Voltage UVLO Implemented by Precision Enable

After the EN pin is pulled low, the device performs the following functions:

- resets IOUT overvoltage and undervoltage indications and the corresponding COMM bit pattern
- resumes the switching frequency tuning to the normal frequency
- resumes channel 1 of the current regulator if it is disabled

Pulling the EN pin low for a short period of approximately 200 ns achieves these same functions with little or no effect on the operation of the boost converter and the current regulator.

8.3.4 Current Limit

The current limit (I_{CL}) of the integrated MOSFET of the LM3492/-Q1 device provides a cycle-by-cycle current limit for protection. This limit can be decreased by injecting a small signal current, I_{ILIM} into the ILIM pin. The relationship between I_{CL} and I_{ILIM} is described in Equation 2.

$$I_{CL} = I_{CL(max)} – 4290 \times I_{ILIM}$$

where

- $I_{CL(max)}$ is the maximum current limit (3.9 A typical) (2)

As shown in Figure 20, create current limit functionality by connecting a resistor (R_{ILIM}) between the VCC pin and the ILIM pin. The typical voltage on the ILIM pin is 0.7 V. To obtain the maximum current limit, connect the ILIM pin to ground.

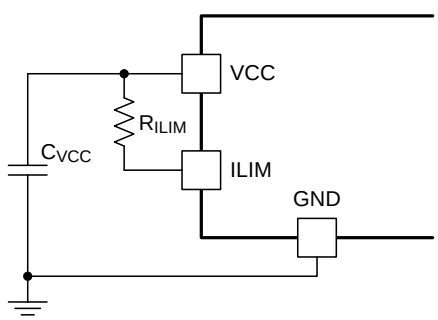

Figure 20. Programmable Current Limit

Copyright © 2010–2016, Texas Instruments Incorporated

Feature Description (continued)

8.3.5 Thermal Protection

An internal thermal shutdown circuit provides thermal protection. The circuit activates at 165°C (typically) to disable the LM3492/-Q1 device. In this case, the LDO regulator turns off and the CDHC pin becomes internally grounded. Thermal protection helps prevent catastrophic failures from accidental device overheating. When the junction temperature of the device drops below 145°C (typical hysteresis = 20°C), the device resumes normal operation.

8.3.6 Dynamic Headroom Control, Over-Ride, and Soft-Start

The LM3492/-Q1 device uses dynamic headroom control (DHC) to adjust the output voltage (V_{OUT}) of the boost converter to reduce the power loss of the current regulator and thereby maximize efficiency. To understand this control function, consider $V_{LED,n}$ the forward voltage of an LED string connecting to the IOUT*n* pin and $V_{IOUT,n}$ as the voltage of the IOUTn pin (where n is 1, 2 for channels 1, 2 of the current regulator). $V_{LED,n}$ normally and gradually decreases (in terms of minutes) as a result of the rise of the LED die temperature during operation. The DHC adjusts the output voltage (V_{OUT}) by adjusting a threshold that is reflected in the voltage of the FB pin with reference to $V_{IOUT,n}$, (the difference between V_{OUT} and $V_{LED,n}$). The capacitor C_{CDHC} sets the sensitivity of DHC, which affects the response time on adjusting V_{OUT}. If the capacitance value of C_{CDHC} is small, V_{OUT} is more sensitive to the variation of $V_{LED,n}$.

The C_{CDHC} capacitor acts to control the soft-start functionality. During the start-up period, the voltage of the CDHC pin rises from 0 V to 2.25 V at a rate that depends on the value of the C_{CDHC} capacitor. This limitation ensures that the voltage of the FB pin (as well as the output voltage) ramps up in a controlled manner, and effectively implements a soft-start function.

An internal switch grounds the CDHC pin during any of the following cases:

- V_{VCC} is below the VCC UVLO threshold
- a thermal shutdown occurs
- the EN pin is pulled low

The CDHC pin cannot be connected to the ground externally.

8.3.7 Current Regulator

The LM3492/-Q1 device integrates a two-channel current regulator for controlling the current of two LED strings. The two LED strings dim individually by applying individual dimming signals to the DIM1 and DIM2 pins for LED strings 1 and 2, which are connected from the VOUT pin to the IOUT1 and IOUT2 pins. The device pulls the DIM1 and DIM2 pins low internally. The lowest contrast ratio is 1000:1. The finest pulse width of the dimming signal for the DIM1 and DIM2 pins is 300 ns.

The device sets the current of an LED string (I_{LED}) from 50 mA to 200 mA by using an external resistor R_{IREF} connected between the IREF pin and ground. Figure 21 describes the relationship between I_{LED} and R_{IREF}. The two channels of the current regulator can work in parallel for only one LED string by connecting the IOUT1 and IOUT2 pins together to provide an LED current of up to 400 mA. In this case, connect the DIM1 and DIM2 pins together.

Feature Description (continued)

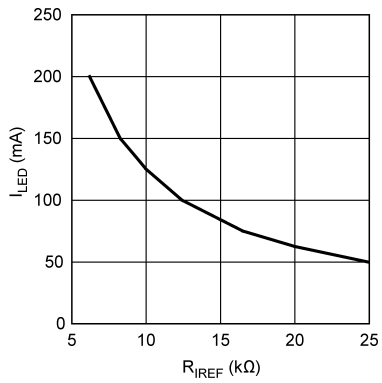

Figure 21. LED Current vs Current Reference Resistance (R_{IREF})

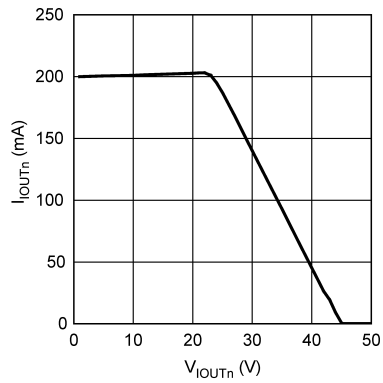

Figure 22. Over-Power Protection

If the voltage on the IOUTn (n = 1, 2) pin is higher than 24 V when channel n is on, the regulated current of channel n reduces linearly if the voltage further increases (as shown in Figure 22). The regulated current of another channel is not affected. This over-power protection feature avoids damaging the current regulator owing to the shorting of many LEDs in one string.

8.3.8 Output Voltage Feedback

The device feeds the output voltage back to the FB pin through a feedback circuit consisting of R_{FB1}, R_{FB2}, and C_{FB} as shown in Figure 23. To assist the feeback functionality, maintain a value of 10 pF for C_{FB}. The DC component of the output voltage feedback uses R_{FB1} and R_{FB2}. The voltage of the FB pin V_{FB} can be adjusted by DHC. When V_{FB} reaches $V_{FB\text{-}OVP}$, the maximum output voltage of the boost converter $V_{OUT(max)}$ reaches its maximum, as shown in Equation 3.

$$V_{OUT(max)} = 2.5\ V\ (1 + R_{FB1}/ R_{FB2}) \quad (3)$$

During DHC operation, maintain the output voltage at a nominal voltage but not the maximum. The nominal output voltage ($V_{OUT(nom)}$) is described in Equation 4.

$$V_{OUT(nom)} = \max\ (V_{LED,n} + V_{IOUT,n}),\ n = 1, 2$$

where

- $V_{LED,n}$ is the forward voltage of LED string n
- $V_{IOUT,n}$ is the voltage of the IOUTn pin, where n is 1, 2 for channels 1, 2 of the current regulator) (4)

The minimum value of $V_{IOUT,n}$ is approximately 5 Ω × I_{LED}. The nominal voltage of the FB pin ($V_{FB(nom)}$) is recommended to be from 1.05 V to 2 V. Equation 5 describes the relation between $V_{OUT(max)}$, $V_{OUT(nom)}$, and $V_{FB(nom)}$:

$$V_{OUT(max)} = V_{OUT(nom)} \times 2.5\ V / V_{FB(nom)} \quad (5)$$

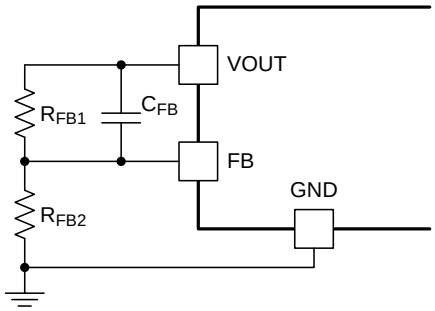

Figure 23. Output Voltage Feedback Circuit

Copyright © 2010–2016, Texas Instruments Incorporated

Feature Description (continued)

8.3.9 Bidirectional Communication Pin

The COMM pin of the LM3492/-Q1 device is an open-drain bidirectional I/O pin for interfacing with an external MCU for the following functions:

- power-good indication
- overtemperature indication
- output current overvoltage and undervoltage indications
- switching frequency tuning
- channel 1 disabling

Except for the power good indication and the overtemperature alerts, all data flow through the COMM pin is serial and is latched by the falling edge of the signal applying to the DIM1 pin, even when channel 1 of the current regulator is disabled. If the DIM1 pin remains only low or only high, either by an external circuit or by allowing it to open and pull low internally, data does not flow. Figure 24 and Figure 25 show timing diagrams of reading and writing a bit from and to the device through the COMM pin.

Pull up the COMM pin by an MCU I/O pin, which has pullup capability, or an external resistor R_{COMM} connected to the VCC pin. Without this capability, the voltage of the COMM pin remains at zero. The rise time of the output signal of the COMM pin depends on the pullup power. If the rise time is long (R_{COMM} is too large or pullup power from the connecting MCU I/O pin is too weak), data may be ready after a longer duration after the falling edge. In this case, the design requires a longer delay between the falling edge latching and the (input or output) bit.

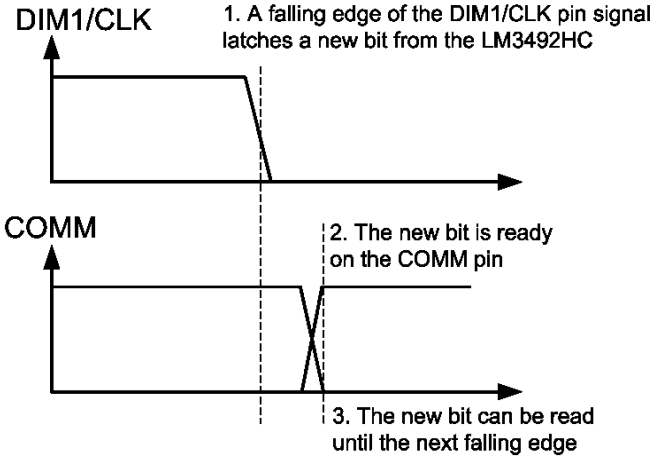

Figure 24. Read from the COMM Pin

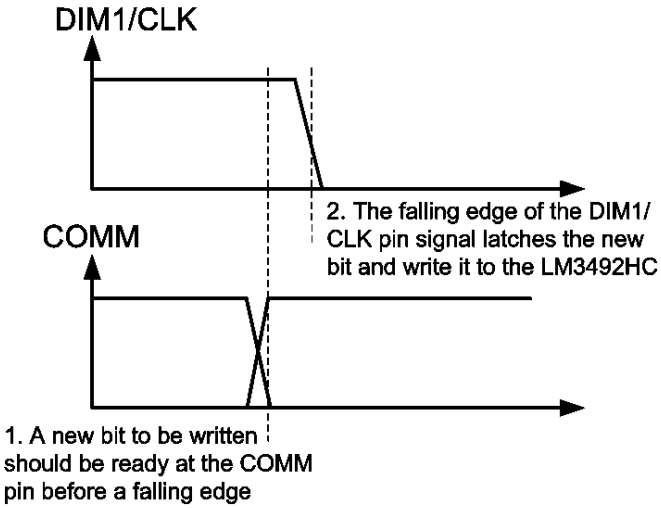

Figure 25. Write to the COMM Pin

8.3.9.1 Power-Good Indication

Upon start-up, the COMM pin reads low. The output voltage of the boost converter of the LM3492/-Q1 device rises until the voltage on the FB pin (V_{FB}) reaches 2.25 V, when the COMM pin reads high to indicate power-good. The power-good indication and the signal applied on the DIM1 pin are independent.

8.3.9.2 Overtemperature Indication

If the junction temperature of the LM3492/-Q1 device reaches 135°C, the COMM pin reads low, showing an overtemperature indication. The external MCU considers to either turn off or reduce the brightness of the LED strings to prevent overtemperature. The overtemperature indication and the signal applied on the DIM1 pin are independent. The COMM pin reads high if the junction temperature falls below 120°C. The device does not latch off and continues to operate in the presence of the overtemperature indication.

Copyright © 2010–2016, Texas Instruments Incorporated

Feature Description (continued)

8.3.9.3 Output Current Undervoltage Indication

The LM3492/-Q1 device gives an IOUTn (n = 1, 2) undervoltage indication if the voltage of the IOUTn pin when DIMn is high is lower than its minimum required voltage which can regulate I_{LED}, and the voltage of the CDHC pin reaches its maximum. These conditions remain while the device applies 508 consecutive dimming signals on the DIMn pin. This means that the current of the LED string n does not reach the regulation value. In most cases, the IOUT undervoltage indication can be regarded as an open fault of the LED string n. A bit pattern (see Table 1) can be read from the COMM pin. The device does not latch off and continues to operate in the presence of the IOUT undervoltage indication.

8.3.9.4 Switching Frequency Tuning

After power good, the switching frequency (f_{SW}) of the LM3492/-Q1 device can be tuned down 20% or 40%, or resume normal by writing commands (refer to Table 2) to the COMM pin. This functionality helps avoid interfering some sensitive devices, for example radios, working nearby the device. Upon reset, the switching frequency (f_{SW}) of the device resumes normal by default. In the presence of an overtemperature indication or any COMM bit pattern, no command can be written to the device.

8.4 Device Functional Modes

There are no additional functional modes for this device.

8.5 Programming

8.5.1 Output Current Overvoltage Indication

The LM3492/-Q1 device gives an IOUTn (n = 1, 2) overvoltage indication if the voltage of the IOUTn pin when DIMn is higher than a threshold of typically 6.5 V. These conditions remain while the device applies 508 consecutive dimming signals on the DIMn pin. The IOUT overvoltage indication can be regarded as a short fault of the LED string n except the following two cases:

- powering up the device at a very low dimming ratio such that V_{OUT} maintains at a maximum and DHC is not fast enough to reduce V_{OUT}
- during DHC override condition, a bit pattern (see Table 1) can be read from the COMM pin

The device does not latch off and continues to operate in the presence of the IOUT overvoltage indication.

Table 1. COMM Indication Bit Patterns

CONDITION	PIN	BIT PATTERN
Overvoltage	IOUT1	0001
	IOUT2	0011
Undervoltage	IOUT1	0101
	IOUT2	0111

8.5.2 COMM Pin Bit Pattern

Table 1 summarizes all COMM bit patterns of output current overvoltage and undervoltage indications. An existing COMM bit pattern is cleared if one of the following condition occurs:

- the LM3492/-Q1 device is shut down
- the LM3492/-Q1 device is disabled by pulling the EN pin low
- the overtemperature indication is appearing

Apply the clock signal on both DIM1 and DIM2 pins when the COMM bit pattern is read by an external MCU. Before reading the COMM bit pattern, pull the EN pin low for approximately 200 ns to reset the COMM bit pattern. This situation does not affect the operation of the boost converter and the current regulator. After EN is reset, if the IOUT overvoltage or undervoltage condition lasts for 508 consecutive clock cycles, the COMM pin sends the COMM bit pattern for the MCU to read.

Copyright © 2010–2016, Texas Instruments Incorporated

In case of overtemperature, the device pulls the COMM pin low to give an overtemperature indication overriding any other pattern. After the overtemperature indication disappears, the COMM bit pattern appears before the overtemperature indication appears again.

8.5.3 Channel 1 Disable

After a power good verification, channel 1 of the current regulator can be disabled by writing a command (see Table 2) to the COMM pin. If LED string 1 is malfunctioning, channel 1 can be disabled and the signal applied on the DIM1 pin can serve as only a clock signal for the data flow of the COMM pin. Channel 1 is by default enabled after reset. If the overtemperature indication or any COMM bit pattern has already presented, no command can be written to the LM3492/-Q1 device.

Table 2. Channel Control Commands

COMMAND	BIT PATTERN
f_{SW} resume normal	1111 0111 0111 0111
f_{SW} tune down by 20%	1111 0001 0001 0001
f_{SW} tune down by 40%	1111 0011 0011 0011
Channel 1 disable	1111 0101 0101 0101

9 Application and Implementation

NOTE

Information in the following applications sections is not part of the TI component specification, and TI does not warrant its accuracy or completeness. TI's customers are responsible for determining suitability of components for their purposes. Customers should validate and test their design implementation to confirm system functionality.

9.1 Application Information

The LM3492/-Q1 device is ideal for automotive and marine GPS display and applications that require a high contrast ratio.

9.2 Typical Application

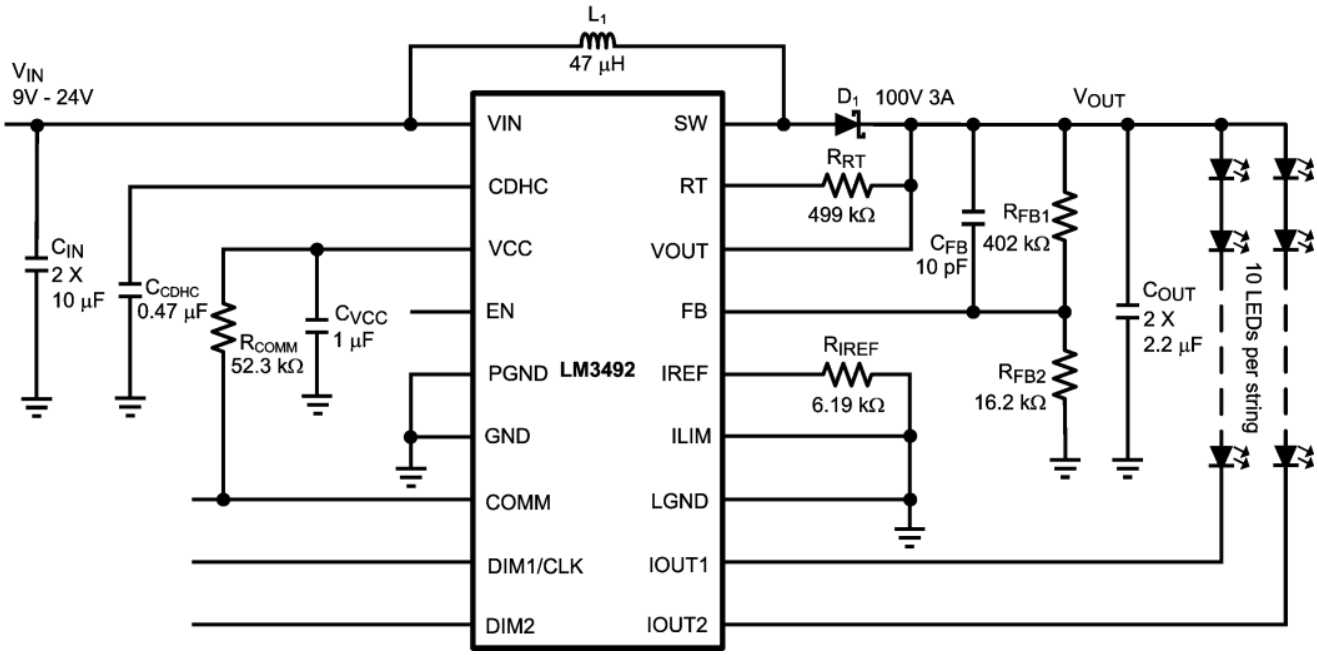

Copyright © 2016, Texas Instruments Incorporated

Figure 26. Typical Application Schematic

9.2.1 Design Requirements

The following procedures are to design an LED driver using the LM3492/-Q1 with an input voltage ranged from 9 V to 24 V and two LED strings consists of 10 LEDs each with a forward voltage of 3.8 V for each LED when running at 200 mA. The output power is 15.2 W. The switching frequency f_{SW} is designed to be 300 kHz.

$$I_{L1(PEAK)} = I_{L1} + I_{LR} / 2 \quad (6)$$

9.2.2 Detailed Design Procedure

9.2.2.1 R_{FB1}, R_{FB2}, and C_{FB}

The nominal voltage of the LED string with 10 LEDs is 38 V, and the minimum voltage of the IOUTn pin (n = 1, 2) is 1 V when I_{LED} is 200 mA. As a result, $V_{OUT(nom)}$ is 39 V. Design $V_{OUT(max)}$ to be 65 V. From Equation 5, $V_{FB(nom)}$ is approximately 1.5 V, which falls in the recommended operation range from 1.05 V to 2 V. Also, design R_{FB2} to be 16.2 kΩ. From Equation 3, R_{FB1} is calculated to be 405 kΩ, and a standard resistor value of 402 kΩ is selected. C_{FB} is selected to be 10 pF as recommended.

Copyright © 2010–2016, Texas Instruments Incorporated

Typical Application (continued)

9.2.2.2 L_1

The main parameter affected by the inductor is the peak to peak inductor current ripple (I_{LR}). To maintain a continuous conduction mode (CCM) operation, ensure that the average inductor current I_{L1} is larger than half of I_{LR}. For a boost converter, I_{L1} equals to the input current I_{IN}. Hence,

$$I_{IN} = (V_{OUT(nom)} \times 2 \times I_{LED}) / V_{IN} \quad (7)$$

Also,

$$t_{on} = (1 - V_{IN}/V_{OUT}) / f_{SW} \quad (8)$$

$$L_1 = (V_{IN} \times t_{on}) / 2I_{IN} \quad (9)$$

If V_{IN} is maximum, which is 24 V in this example, and only one LED string is turned on (because the two channels of the device are individually dimmable), I_{IN} is minimum. From Equation 7 to Equation 9, it can be calculated that $I_{IN(MIN)}$, t_{on}, and L_1 are 0.325 A, 1.28 µs, and 47 µH. However, from Equation 7, I_{IN} is maximum when V_{IN} is minimum, which is 9 V in this example, and the two LED strings are turned on together. Hence $I_{IN(max)}$ is 1.73 A. Then, I_{LR} is

$$I_{LR} = (V_{IN} \times t_{on}) / L_1 \quad (10)$$

From Equation 8, t_{on} is 2.56 µs. From (9), I_{LR} is 0.49 A. The steady-state peak inductor current $I_{L1(PEAK)}$ is

$$I_{L1(PEAK)} = I_{L1} + I_{LR} / 2 \quad (11)$$

As a result, $I_{L1(PEAK)}$ is 1.98 A. A standard value of 47 µH is selected for L_1, and its saturation current is larger than 1.98 A.

9.2.2.3 D_1

The selection of the boost diode D_1 depends on two factors. The first factor is the reverse voltage, which equals to V_{OUT} for a boost converter. The second factor is the peak diode current at the steady state, which equals to the peak inductor current as shown in Equation 11. In this example, a 100-V, 3-A Schottky diode is selected.

9.2.2.4 C_{IN} and C_{OUT}

The function of the input capacitor C_{IN} and the output capacitor C_{OUT} is to reduce the input and output voltage ripples. Experimentation is usually necessary to determine their value. The rated DC voltage of capacitors used should be higher than the maximum DC voltage applied. Owing to the concern of product lifetime, TI recommends ceramic capacitors. But ceramic capacitors with high rated DC voltage and high capacitance are rare in general. Multiple capacitors connecting in parallel can be used for C_{IN} and C_{OUT}. In this example, two 10-µF ceramic capacitor are used for C_{IN}, and two 2.2-µF ceramic capacitor are used for C_{OUT}.

9.2.2.5 C_{VCC}

The capacitor on the VCC pin provides noise filtering and stabilizes the LDO regulator. It also prevents false triggering of the VCC UVLO. C_{VCC} is recommended to be a 1-µF, good quality and low ESR ceramic capacitor.

9.2.2.6 C_{CDHC}

The capacitor at the CDHC pin not only affects the sensitivity of the DHC but also determines the soft-start time t_{SS}, the time for the output voltage to rise until power good. t_{SS} is determined from the following equation:

$$t_{SS} = \frac{C_{CDHC} \times 2.25V}{120\ \mu A} \quad (12)$$

In this example, C_{CDHC} is recommended to be a 0.47-µF good quality and low ESR ceramic capacitor.

9.2.2.7 R_{RT} and R_{IREF}

The resistors R_{RT} and R_{IREF} set the switching frequency f_{SW} of the boost converter and the LED current I_{LED} respectively. From Figure 16, if f_{SW} is 300 kHz, R_{RT} is selected to be 442 kΩ. From Figure 21, if I_{LED} is 200 mA, R_{IREF} is selected to be 6.19 kΩ.

Copyright © 2010–2016, Texas Instruments Incorporated

Typical Application (continued)

9.2.2.8 R_{COMM}

Because the COMM pin is open drain, a resistor R_{COMM} of 52.3 kΩ is used to connect the VCC and COMM pins to act as a pullup function.

9.2.3 Application Curve

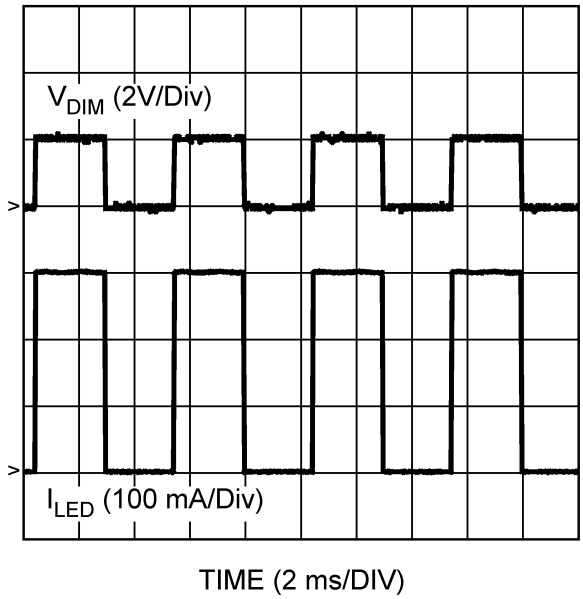

Figure 27. LED 50% Dimming, Both Channels Combined (V_{IN} = 12 V, I_{LED} = 150 mA, 200 Hz)

Copyright © 2010–2016, Texas Instruments Incorporated

10 Power Supply Recommendations

Use a DC output power supply with a maximum output voltage capability greater than the maximum input voltage for the application. The current rating of the supply should be greater than the maximum input current required by the application.

11 Layout

11.1 Layout Guidelines

The layout of the printed-circuit board is critical to optimize the performance of the LM3492/-Q1 device application circuit. In general, external components should be placed as close to the device and each other as possible to make copper traces short and direct. In particular, components of the boost converter C_{IN}, L_1, D_1, C_{OUT}, and the LM3492/-Q1 device should be closed. Also, the output feedback capacitor C_{FB} should be closed to the output capacitor C_{OUT}. The ground plane connecting the GND, PGND, and LGND pins and the exposed pad of the device and the ground connection of the C_{IN} and C_{OUT} should be placed on the same copper layer.

Good heat dissipation helps optimize the performance of the device. The ground plane should be used to connect the exposed pad of the device, which is internally connected to the device die substrate. The area of the ground plane should be extended as much as possible on the same copper layer around the device. Using numerous vias beneath the exposed pad to dissipate heat of the device to another copper layer is also a good practice.

11.2 Layout Example

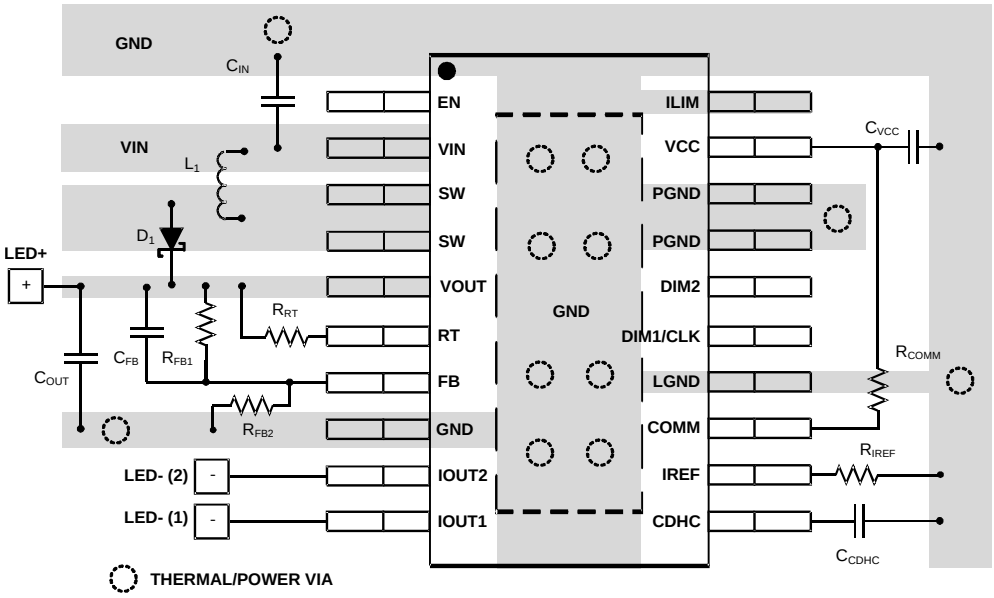

Figure 28. Layout Recommendation

12 Device and Documentation Support

12.1 Documentation Support

For related documentation see the following:

- *AN-1656 Design Challenges of Switching LED Drivers* (SNVA253)
- *AN-2192 LM3492 12VAC, 7W LED Driver for AR111 Application* (SNOA568)
- *AN-2056 LM3492 Evaluation Board Reference Design* (SNVA438)

12.1.1 Related Documentation

12.2 Related Links

The table below lists quick access links. Categories include technical documents, support and community resources, tools and software, and quick access to sample or buy.

Table 3. Related Links

PARTS	PRODUCT FOLDER	SAMPLE & BUY	TECHNICAL DOCUMENTS	TOOLS & SOFTWARE	SUPPORT & COMMUNITY
LM3492	Click here	Click here	Click here	Click here	Click here
LM3492-Q1	Click here	Click here	Click here	Click here	Click here

12.3 Receiving Notification of Documentation Updates

To receive notification of documentation updates, navigate to the device product folder on ti.com. In the upper right corner, click on *Alert me* to register and receive a weekly digest of any product information that has changed. For change details, review the revision history included in any revised document.

12.4 Community Resources

The following links connect to TI community resources. Linked contents are provided "AS IS" by the respective contributors. They do not constitute TI specifications and do not necessarily reflect TI's views; see TI's Terms of Use.

TI E2E™ Online Community ***TI's Engineer-to-Engineer (E2E) Community.*** Created to foster collaboration among engineers. At e2e.ti.com, you can ask questions, share knowledge, explore ideas and help solve problems with fellow engineers.

Design Support ***TI's Design Support*** Quickly find helpful E2E forums along with design support tools and contact information for technical support.

12.5 Trademarks

PowerPAD, E2E are trademarks of Texas Instruments.
All other trademarks are the property of their respective owners.

12.6 Electrostatic Discharge Caution

These devices have limited built-in ESD protection. The leads should be shorted together or the device placed in conductive foam during storage or handling to prevent electrostatic damage to the MOS gates.

12.7 Glossary

SLYZ022 — *TI Glossary*.

This glossary lists and explains terms, acronyms, and definitions.

Copyright © 2010–2016, Texas Instruments Incorporated

13 Mechanical, Packaging, and Orderable Information

The following pages include mechanical, packaging, and orderable information. This information is the most current data available for the designated devices. This data is subject to change without notice and revision of this document. For browser-based versions of this data sheet, refer to the left-hand navigation.

PACKAGING INFORMATION

Orderable part number	Status (1)	Material type (2)	Package | Pins	Package qty | Carrier	RoHS (3)	Lead finish/ Ball material (4)	MSL rating/ Peak reflow (5)	Op temp (°C)	Part marking (6)
LM3492MH/NOPB	Active	Production	HTSSOP (PWP) | 20	73 | TUBE	Yes	SN	Level-1-260C-UNLIM	-40 to 125	LM3492 MH
LM3492MH/NOPB.A	Active	Production	HTSSOP (PWP) | 20	73 | TUBE	Yes	SN	Level-1-260C-UNLIM	-40 to 125	LM3492 MH
LM3492MHX/NOPB	Active	Production	HTSSOP (PWP) | 20	2500 | LARGE T&R	Yes	SN	Level-1-260C-UNLIM	-40 to 125	LM3492 MH
LM3492MHX/NOPB.A	Active	Production	HTSSOP (PWP) | 20	2500 | LARGE T&R	Yes	SN	Level-1-260C-UNLIM	-40 to 125	LM3492 MH
LM3492QMH/NOPB	Active	Production	HTSSOP (PWP) | 20	73 | TUBE	Yes	SN	Level-1-260C-UNLIM	-40 to 125	LM3492 QMH
LM3492QMH/NOPB.A	Active	Production	HTSSOP (PWP) | 20	73 | TUBE	Yes	SN	Level-1-260C-UNLIM	-40 to 125	LM3492 QMH
LM3492QMHX/NOPB	Active	Production	HTSSOP (PWP) | 20	2500 | LARGE T&R	Yes	SN	Level-1-260C-UNLIM	-40 to 125	LM3492 QMH
LM3492QMHX/NOPB.A	Active	Production	HTSSOP (PWP) | 20	2500 | LARGE T&R	Yes	SN	Level-1-260C-UNLIM	-40 to 125	LM3492 QMH

(1) **Status:** For more details on status, see our product life cycle.

(2) **Material type:** When designated, preproduction parts are prototypes/experimental devices, and are not yet approved or released for full production. Testing and final process, including without limitation quality assurance, reliability performance testing, and/or process qualification, may not yet be complete, and this item is subject to further changes or possible discontinuation. If available for ordering, purchases will be subject to an additional waiver at checkout, and are intended for early internal evaluation purposes only. These items are sold without warranties of any kind.

(3) **RoHS values:** Yes, No, RoHS Exempt. See the TI RoHS Statement for additional information and value definition.

(4) **Lead finish/Ball material:** Parts may have multiple material finish options. Finish options are separated by a vertical ruled line. Lead finish/Ball material values may wrap to two lines if the finish value exceeds the maximum column width.

(5) **MSL rating/Peak reflow:** The moisture sensitivity level ratings and peak solder (reflow) temperatures. In the event that a part has multiple moisture sensitivity ratings, only the lowest level per JEDEC standards is shown. Refer to the shipping label for the actual reflow temperature that will be used to mount the part to the printed circuit board.

(6) **Part marking:** There may be an additional marking, which relates to the logo, the lot trace code information, or the environmental category of the part.

Multiple part markings will be inside parentheses. Only one part marking contained in parentheses and separated by a "~" will appear on a part. If a line is indented then it is a continuation of the previous line and the two combined represent the entire part marking for that device.

Important Information and Disclaimer: The information provided on this page represents TI's knowledge and belief as of the date that it is provided. TI bases its knowledge and belief on information provided by third parties, and makes no representation or warranty as to the accuracy of such information. Efforts are underway to better integrate information from third parties. TI has taken and continues to take reasonable steps to provide representative and accurate information but may not have conducted destructive testing or chemical analysis on incoming materials and chemicals. TI and TI suppliers consider certain information to be proprietary, and thus CAS numbers and other limited information may not be available for release.

In no event shall TI's liability arising out of such information exceed the total purchase price of the TI part(s) at issue in this document sold by TI to Customer on an annual basis.

OTHER QUALIFIED VERSIONS OF LM3492, LM3492-Q1 :

- Catalog : LM3492
- Automotive : LM3492-Q1

NOTE: Qualified Version Definitions:

- Catalog - TI's standard catalog product
- Automotive - Q100 devices qualified for high-reliability automotive applications targeting zero defects

TAPE AND REEL INFORMATION

REEL DIMENSIONS

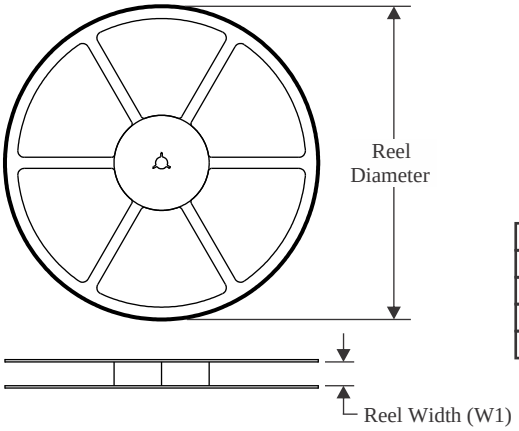

TAPE DIMENSIONS

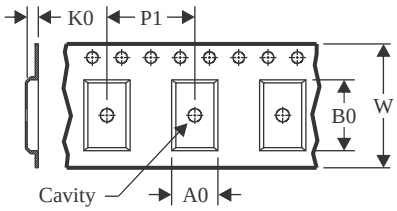

A0	Dimension designed to accommodate the component width
B0	Dimension designed to accommodate the component length
K0	Dimension designed to accommodate the component thickness
W	Overall width of the carrier tape
P1	Pitch between successive cavity centers

QUADRANT ASSIGNMENTS FOR PIN 1 ORIENTATION IN TAPE

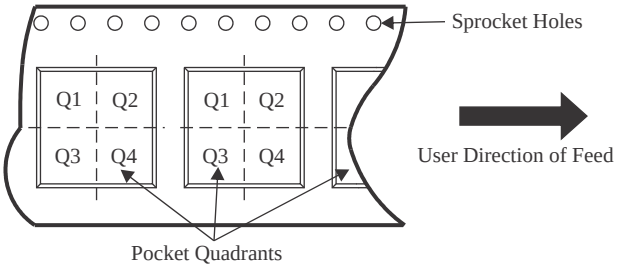

*All dimensions are nominal

Device	Package Type	Package Drawing	Pins	SPQ	Reel Diameter (mm)	Reel Width W1 (mm)	A0 (mm)	B0 (mm)	K0 (mm)	P1 (mm)	W (mm)	Pin1 Quadrant
LM3492MHX/NOPB	HTSSOP	PWP	20	2500	330.0	16.4	6.95	7.0	1.4	8.0	16.0	Q1
LM3492QMHX/NOPB	HTSSOP	PWP	20	2500	330.0	16.4	6.95	7.0	1.4	8.0	16.0	Q1

TAPE AND REEL BOX DIMENSIONS

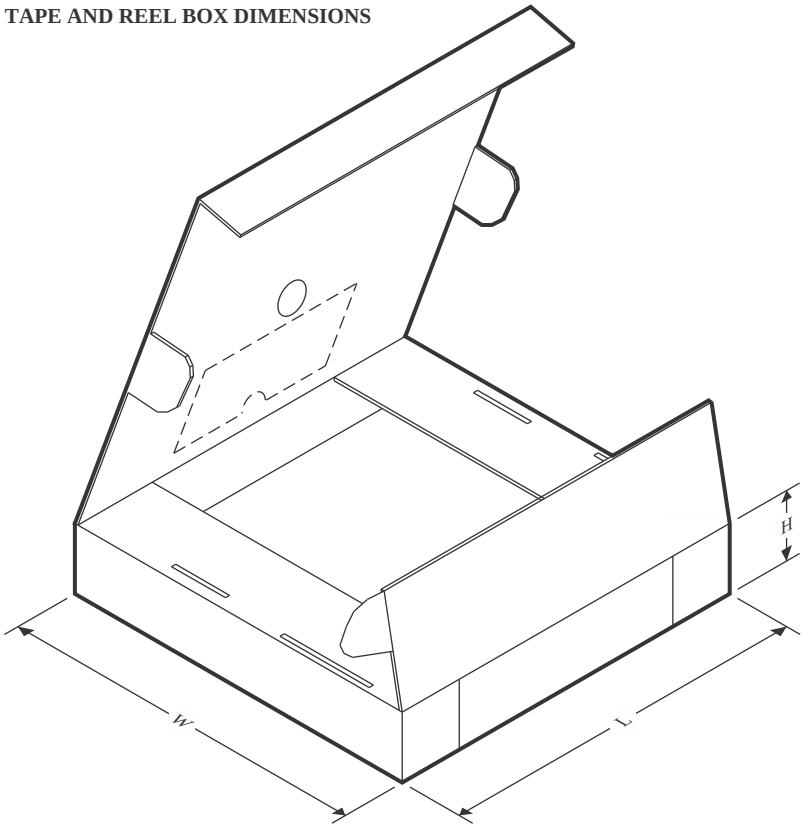

*All dimensions are nominal

Device	Package Type	Package Drawing	Pins	SPQ	Length (mm)	Width (mm)	Height (mm)
LM3492MHX/NOPB	HTSSOP	PWP	20	2500	356.0	356.0	35.0
LM3492QMHX/NOPB	HTSSOP	PWP	20	2500	367.0	367.0	35.0

TUBE

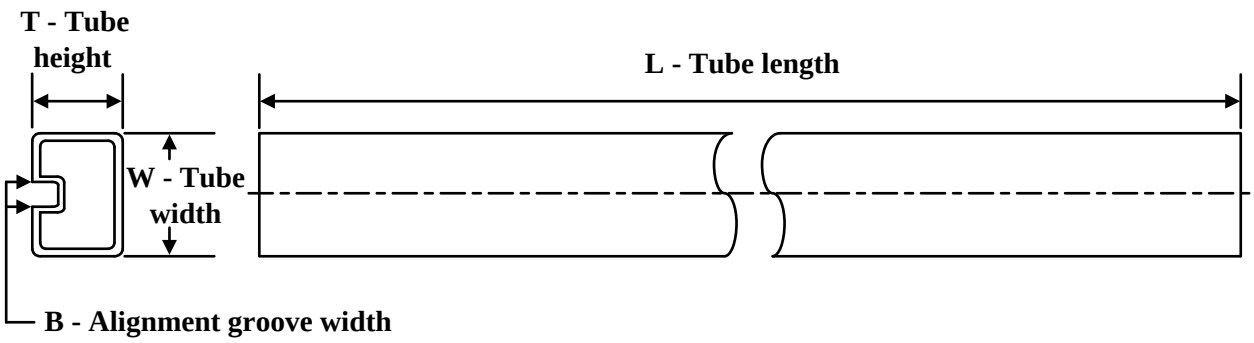

*All dimensions are nominal

Device	Package Name	Package Type	Pins	SPQ	L (mm)	W (mm)	T (µm)	B (mm)
LM3492MH/NOPB	PWP	HTSSOP	20	73	495	8	2514.6	4.06
LM3492MH/NOPB.A	PWP	HTSSOP	20	73	495	8	2514.6	4.06
LM3492QMH/NOPB	PWP	HTSSOP	20	73	495	8	2514.6	4.06
LM3492QMH/NOPB.A	PWP	HTSSOP	20	73	495	8	2514.6	4.06

PWP (R-PDSO-G20) PowerPAD™ PLASTIC SMALL OUTLINE

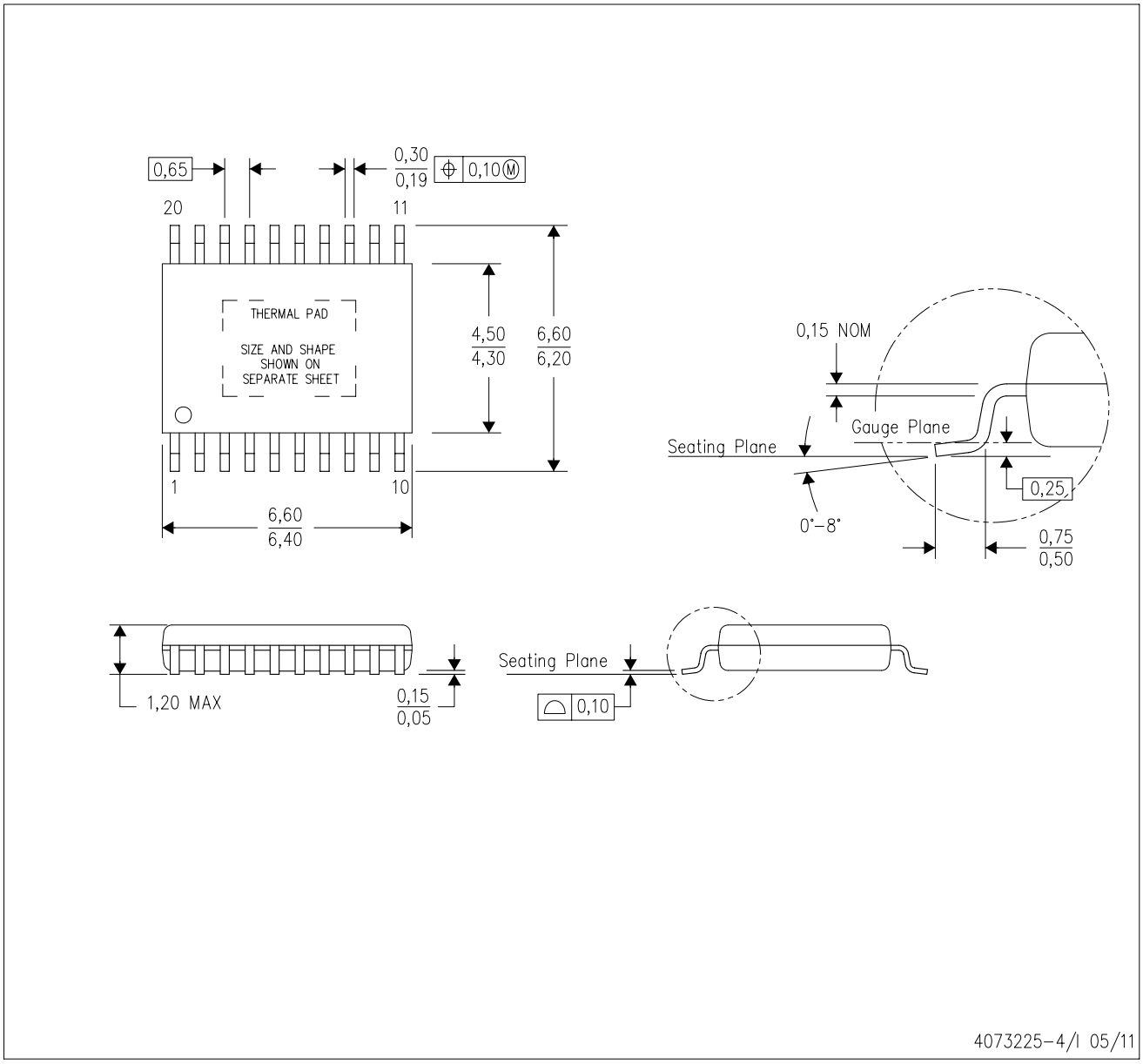

NOTES:
A. All linear dimensions are in millimeters.
B. This drawing is subject to change without notice.
C. Body dimensions do not include mold flash or protrusions. Mold flash and protrusion shall not exceed 0.15 per side.
D. This package is designed to be soldered to a thermal pad on the board. Refer to Technical Brief, PowerPad Thermally Enhanced Package, Texas Instruments Literature No. SLMA002 for information regarding recommended board layout. This document is available at www.ti.com <http://www.ti.com>.
E. See the additional figure in the Product Data Sheet for details regarding the exposed thermal pad features and dimensions.
E. Falls within JEDEC MO-153

PowerPAD is a trademark of Texas Instruments.

PWP0020A

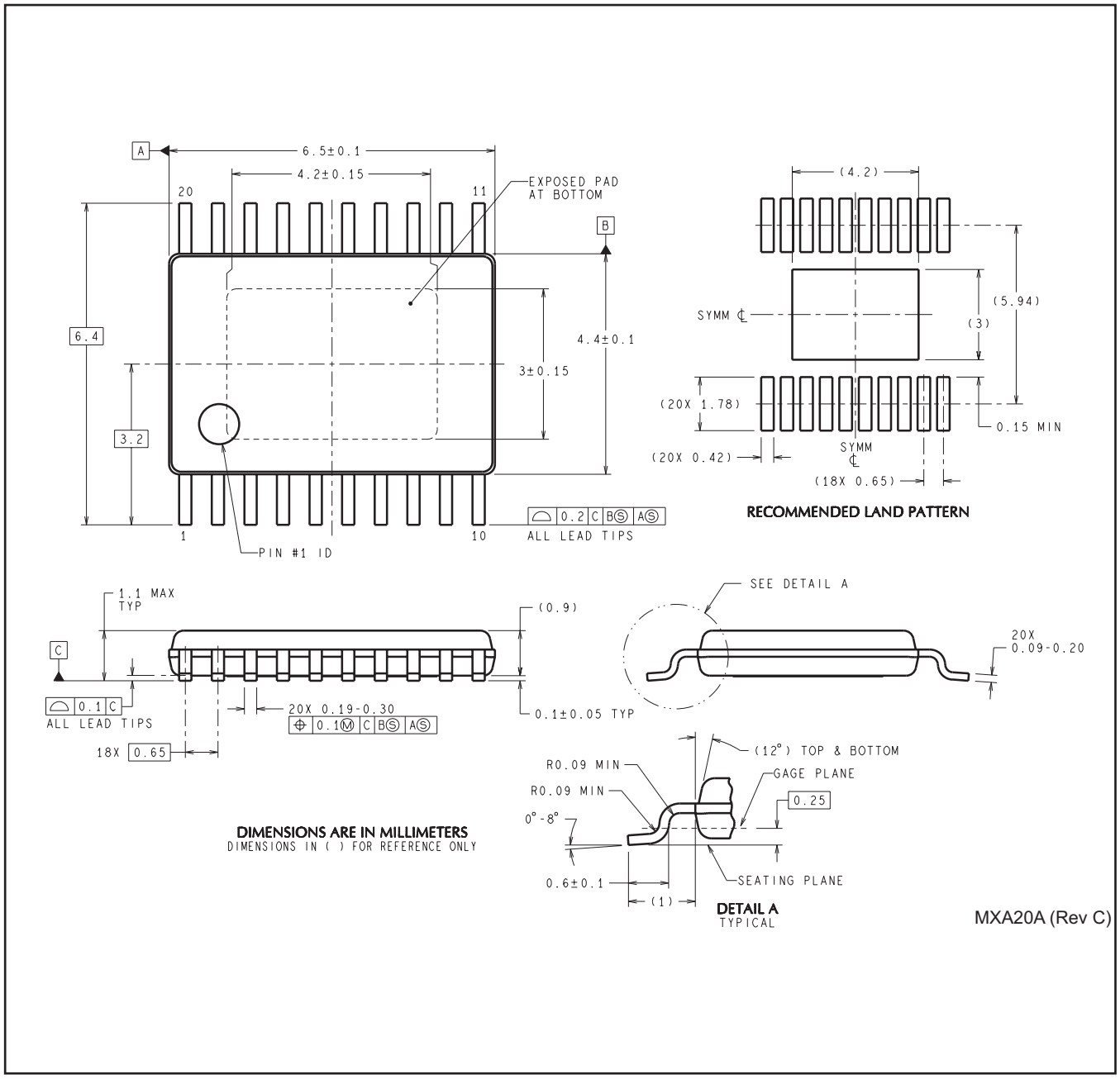
A
6.5±0.1
4.2±0.15
20
11
EXPOSED PAD
AT BOTTOM
B
6.4
4.4±0.1
3±0.15
3.2
1
10
PIN #1 ID
0.2 C B S A S
ALL LEAD TIPS
(4.2)
(5.94)
SYMM ℄
(3)
(20X 1.78)
0.15 MIN
(20X 0.42)
SYMM
℄
(18X 0.65)
RECOMMENDED LAND PATTERN
1.1 MAX
TYP
(0.9)
C
0.1 C
ALL LEAD TIPS
20X 0.19-0.30
0.1 M C B S A S
18X 0.65
0.1±0.05 TYP
SEE DETAIL A
20X
0.09-0.20
(12°) TOP & BOTTOM
R0.09 MIN
GAGE PLANE
R0.09 MIN
0.25
0°-8°
0.6±0.1
SEATING PLANE
(1)
DETAIL A
TYPICAL
DIMENSIONS ARE IN MILLIMETERS
DIMENSIONS IN ( ) FOR REFERENCE ONLY
MXA20A (Rev C)

IMPORTANT NOTICE AND DISCLAIMER

TI PROVIDES TECHNICAL AND RELIABILITY DATA (INCLUDING DATA SHEETS), DESIGN RESOURCES (INCLUDING REFERENCE DESIGNS), APPLICATION OR OTHER DESIGN ADVICE, WEB TOOLS, SAFETY INFORMATION, AND OTHER RESOURCES “AS IS” AND WITH ALL FAULTS, AND DISCLAIMS ALL WARRANTIES, EXPRESS AND IMPLIED, INCLUDING WITHOUT LIMITATION ANY IMPLIED WARRANTIES OF MERCHANTABILITY, FITNESS FOR A PARTICULAR PURPOSE OR NON-INFRINGEMENT OF THIRD PARTY INTELLECTUAL PROPERTY RIGHTS.

These resources are intended for skilled developers designing with TI products. You are solely responsible for (1) selecting the appropriate TI products for your application, (2) designing, validating and testing your application, and (3) ensuring your application meets applicable standards, and any other safety, security, regulatory or other requirements.

These resources are subject to change without notice. TI grants you permission to use these resources only for development of an application that uses the TI products described in the resource. Other reproduction and display of these resources is prohibited. No license is granted to any other TI intellectual property right or to any third party intellectual property right. TI disclaims responsibility for, and you will fully indemnify TI and its representatives against, any claims, damages, costs, losses, and liabilities arising out of your use of these resources.

TI’s products are provided subject to TI’s Terms of Sale or other applicable terms available either on ti.com or provided in conjunction with such TI products. TI’s provision of these resources does not expand or otherwise alter TI’s applicable warranties or warranty disclaimers for TI products.

TI objects to and rejects any additional or different terms you may have proposed.

Mailing Address: Texas Instruments, Post Office Box 655303, Dallas, Texas 75265
Copyright © 2025, Texas Instruments Incorporated