CDx4HCx4316 High-Speed CMOS Logic Quad Analog Switch with Level Translation

1 Features

- Wide analog-input-voltage range:

  V_{CC} - V_{EE}: 0V to 10V
- Low ON resistance:
  - 45Ω (typical): V_{CC} = 4.5V
  - 35Ω (typical): V_{CC} = 6V
  - 30Ω (typical): V_{CC} – V_{EE} = 9V
- Fast switching and propagation delay times
- Low OFF leakage current
- Built-in break-before-make switching
- Logic-level translation to enable 5V logic to accommodate ±5 V analog signals
- Wide operating temperature range: -55°C to 125°C
- HC types:
  - 2V to 10V operation
  - High noise immunity: N_{IL} = 30%, N_{IH} = 30% of V_{CC} at V_{CC} = 5V
- HCT types:
  - Direct LSTTL input logic compatibility, V_{IL}= 0.8V (maximum), V_{IH} = 2V (minimum)
  - CMOS input compatibility, I_I ≤ 1 µA at V_{OL}, V_{OH}

2 Description

The ’HC4316 and CD74HCT4316 contain four independent digitally controlled analog switches that use silicon-gate CMOS technology to achieve operating speeds similar to LSTTL with the low power consumption of standard CMOS integrated circuits.

In addition these devices contain logic-level translation circuits that provide for analog signal switching of voltages between ±5V via 5V logic. Each switch is turned on by a high-level voltage on its select input (S) when the common Enable (E) is Low. A High E disables all switches. The digital inputs can swing between V_{CC} and GND; the analog inputs/outputs can swing between V_{CC} as a positive limit and V_{EE} as a negative limit. Voltage ranges are shown in Figure 13-1 and Figure 13-2.

Device Information

Inputs		Switch
$\overline{E}$	**S**	**ON/OFF**
L	L	OFF
L	H	ON
H	H	OFF

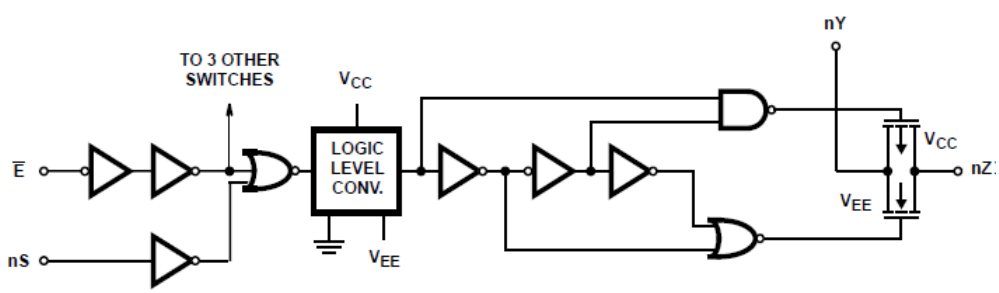

One Switch

An IMPORTANT NOTICE at the end of this data sheet addresses availability, warranty, changes, use in safety-critical applications, intellectual property matters and other important disclaimers. PRODUCTION DATA.

Table of Contents

1 Features.....1
2 Description.....1
3 Pin Configurations and Functions.....3
4 Absolute Maximum Ratings.....4
5 Thermal Information.....5
6 Recommended Operating Conditions.....5
7 Electrical Characteristics: HC Devices.....6
8 Electrical Characteristics: HCT Devices.....9
9 Switching Characteristics HC.....10
10 Switching Characteristics HCT.....13
11 Analog Channel Specifications.....15
12 HCT Input Loading Table.....15
13 Recommended Operating Area as a Function of Supply Voltage.....15
14 Typical Performance Curves.....16
15 Parameter Measurement Information.....17
16 Detailed Description.....18
16.1 Functional Block Diagram.....18
16.2 Device Functional Modes.....18
17 Device and Documentation Support.....19
17.1 Receiving Notification of Documentation Updates.....19
17.2 Support Resources.....19
17.3 Trademarks.....19
17.4 Electrostatic Discharge Caution.....19
17.5 Glossary.....19
18 Revision History.....19
19 Mechanical, Packaging, and Orderable Information.....19

Copyright © 2024 Texas Instruments Incorporated

3 Pin Configurations and Functions

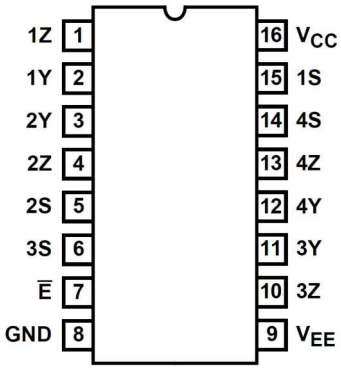

Figure 3-1. CD74HC4316 (TSSOP)

Table 3-1. Pin Functions

PIN		TYPE	DESCRIPTION
NAME	NO.		
1Z	1	I/O	Input/Output for Switch 1
1Y	2	I/O	Input/Output for Switch 1
2Y	3	I/O	Input/Output for Switch 2
2Z	4	I/O	Input/Output for Switch 2
2S	5	I	Control pin for Switch 2
3S	6	I	Control pin for Switch 3
E	7	I	Enable Pin
GND	8	-	Ground Pin
V_{EE}	9	-	Power Pin
3Z	10	I/O	Input/Output for Switch 3
3Y	11	I/O	Input/Output for Switch 3
4Y	12	I/O	Input/Output for Switch 4
4Z	13	I/O	Input/Output for Switch 4
4S	14	I	Control pin for Switch 4
1S	15	I	Control pin for Switch 1
V_{CC}	16	-	Power Pin

Copyright © 2024 Texas Instruments Incorporated

4 Absolute Maximum Ratings

over operating free-air temperature range (unless otherwise noted)[1]

			MIN	MAX	UNIT
$V_{CC} – V_{EE}$	DC Supply voltage		-0.5	10.5	V
V_{CC}			–0.5	7	V
V_{EE}			0.5	-7	V
I_{IK}	DC input diode current	V_I < – 0.5 V or V_I > V_{CC} + 0.5 V	–20	20	mA
I_{OK}	DC switch diode current	V_I < V_{EE} – 0.5 V or V_I < V_{CC} + 0.5 V	–25	25	mA
I_{OK}	DC Output Diode Current	For V_O < -0.5V or V_O > V_{CC} + 0.5V	–20	20	mA
I_O	DC Output Source or Sink Current per Output Pin	For V_O > -0.5V or V_O < V_{CC} + 0.5V	–25	25	mA
I_{CC}	DC V_{CC} or ground current		–50	50	mA
T_{JMAX}	Maximum junction temperature			150	°C
T_{LMAX}	Maximum lead temperature	Soldering 10 s		300	°C
T_{stg}	Storage temperature		–65	150	°C

(1) Stresses beyond those listed under *Absolute Maximum Rating* may cause permanent damage to the device. These are stress ratings only, which do not imply functional operation of the device at these or any other conditions beyond those indicated under *Recommended Operating Condition*. Exposure to absolute-maximum-rated conditions for extended periods may affect device reliability.

Copyright © 2024 Texas Instruments Incorporated

5 Thermal Information

THERMAL METRIC [1]		PW (TSSOP) 16 PINS	UNIT
$R_{\theta JA}$	Junction-to-ambient thermal resistance	127.9	°C/W

(1) For more information about traditional and new thermal metrics, see the Semiconductor and IC Package Thermal Metrics application report.

6 Recommended Operating Conditions

over operating free-air temperature range (unless otherwise noted)

			MIN	NOM	MAX	UNIT
V_{CC}	Supply voltage range (T_A = full package temperature range)(2)	CD54 and 74HC types	2		6	V
		CD54 and 74HCT types	4.5		5.5	
$V_{CC} – V_{EE}$ [1]	Supply voltage range (T_A = full package temperature range)(2)	CD54 and 74HC types, CD54 and 74HCT types	2		10	V
V_{EE}	Supply voltage range (T_A = full package temperature range)(3)	CD54 and 74HC types, CD54 and 74HCT types	0		–6	V
V_I	DC input control voltage		GND		V_{CC}	V
V_{IS}	Analog switch I/O voltage		V_{EE}		V_{CC}	V
T_A	Ambient temperature		–55		125	°C
t_r , t_f	Input rise and fall times	2 V	0		1000	ns
		4.5 V	0		500	
		6 V	0		400	

(1) V_{DD} and V_{SS} can be any value as long as 3 V ≤ (V_{DD} – V_{SS}) ≤ 24 V, and the minimum V_{DD} is met.

7 Electrical Characteristics: HC Devices

Over operating free-air temperature range, V_{SUPPLY} = ±5 V, and R_L = 100 Ω, (unless otherwise noted)[1]

PARAMETER	TEST CONDITIONS					MIN	TYP	MAX	UNIT
SIGNAL INPUTS (V_{IS}) AND OUTPUTS (V_{OS})									
	V_{IS} (V)	**V_I (V)**	**V_{EE} (V)**	**V_{CC} (V)**	**T_A**				
Input High Voltage, V_{IH}, Min				2	25°C			1.5	V
					–40°C to +85°C			1.5	
					–55°C to +125°C			1.5	
				4.5	25°C			3.15	
					–40°C to +85°C			3.15	
					–55°C to +125°C			3.15	
				6	25°C			4.2	
					–40°C to +85°C			4.2	
					–55°C to +125°C			4.2	
Input Low Voltage, V_{IL}, Max				2	25°C	0.5			V
					–40°C to +85°C	0.5			
					–55°C to +125°C	0.5			
				4.5	25°C	1.35			
					–40°C to +85°C	1.35			
					–55°C to +125°C	1.35			
				6	25°C	1.8			
					–40°C to +85°C	1.8			
					–55°C to +125°C	1.8			

Copyright © 2024 Texas Instruments Incorporated

Over operating free-air temperature range, V_{SUPPLY} = ±5 V, and R_L = 100 Ω, (unless otherwise noted)[1]

PARAMETER	TEST CONDITIONS					MIN	TYP	MAX	UNIT
r_{ON} ON resistance I_O = 1mA	V_{CC} or V_{EE}	V_{IH} or V_{IL}	0	4.5	25°C		30	180	Ω
					–40°C to +85°C			225	
					–55°C to +125°C			270	
			0	6	25°C		35	160	
					–40°C to +85°C			200	
					–55°C to +125°C			240	
			-4.5	4.5	25°C		30	135	
					–40°C to +85°C			170	
					–55°C to +125°C			205	
	V_{CC} to V_{EE}		0	4.5	25°C		40	320	Ω
					–40°C to +85°C			400	
					–55°C to +125°C			480	
			0	6	25°C		30	240	
					–40°C to +85°C			300	
					–55°C to +125°C			360	
			-4.5	4.5	25°C		35	170	
					–40°C to +85°C			215	
					–55°C to +125°C			255	
Δr_{ON} Maximum ON resistance between any two channels			0	4.5	25°C		10		Ω
			0	6	25°C		8.5		
			-4.5	4.5	25°C		5		
I_{IZ} Switch OFF leakage current	V_{CC} - V_{EE}	V_{IH} or V_{IL} $\overline{E}$ = V_{CC}	0	6	25°C			±0.1	μA
			0	6	–55°C to 85°C			±1	
			0	6	–55°C to 125°C			±1	
			-5	5	25°C			±0.1	
			-5	5	–55°C to 85°C			±1	
			-5	5	–55°C to 125°C			±1	
I_{IL} Control input leakage current		V_{CC} or GND	0	6	25°C			±0.1	μA
					–55°C to 85°C			±1	
					–55°C to 125°C			±1	

Over operating free-air temperature range, V_{SUPPLY} = ±5 V, and R_L = 100 Ω, (unless otherwise noted)[1]

PARAMETER	TEST CONDITIONS					MIN	TYP	MAX	UNIT
Quiescent Device Current, I_{DD} Max I_O = 1mA	When V_{IS} = V_{EE}, V_{OS} = V_{CC}	V_{CC} or GND	0	6	25°C			14	μA
					–55°C to 85°C			80	
					–55°C to 125°C			160	
	When V_{IS} = V_{CC}, V_{OS} = V_{EE}		-5	5	25°C			30	
					–55°C to 85°C			160	
					–55°C to 125°C			320	
CONTROL (ADDRESS OR INHIBIT), V_C									

(1) For dual-supply systems theoretical worst case (VI = 2.4V, VCC = 5.5V) specification is 1.8mA

Copyright © 2024 Texas Instruments Incorporated

8 Electrical Characteristics: HCT Devices

Over operating free-air temperature range, V_{SUPPLY} = ±5 V, and R_L = 100 Ω, (unless otherwise noted)[1]

PARAMETER		TEST CONDITIONS					MIN	TYP	MAX	UNIT
SIGNAL INPUTS (V_{IS}) AND OUTPUTS (V_{OS})										
		V_{IS} (V)	**V_I (V)**	**V_{CC} (V)**	**V_{EE} (V)**	**T_A**				
High Level Input Voltage	V_{IH}			4.5 to 5.5		25°C	2			V
						–40°C to +85°C	2			
						–55°C to +125°C	2			
Low Level Input Voltage	V_{IL}					25°C			0.8	V
						–40°C to +85°C			0.8	
						–55°C to +125°C			0.8	
"ON" Resistance IO = 1mA	R_{ON}	V_{CC} or V_{EE}	V_{IH} or V_{IL}	4.5	0	25°C		30	180	Ω
						–40°C to +85°C		45	225	
						–55°C to +125°C			270	
		V_{CC} to V_{EE}		4.5	-4.5	25°C			135	
						–40°C to +85°C		30	170	
						–55°C to +125°C			205	
		V_{CC} or V_{EE}		4.5	0	25°C			320	
						–40°C to +85°C		85	400	
						–55°C to +125°C			480	
		V_{CC} to V_{EE}		4.5	-4.5	25°C		35	170	
						–40°C to +85°C			215	
						–55°C to +125°C			255	
"ON" Resistance Between Any Two Switches	▲R_{ON}		VCC	4.5	0	25°C		10		Ω
				4.5	-4.5	25°C		5		Ω
Off-Switch Leakage Current	I_{IZ}	V_{CC} - V_{EE}	V_{IH} or V_{IL}	6	0	25°C			±0.1	μA
						–55°C to 85°C			±1	μA
						–55°C to 125°C			±1	μA
				5	-5	25°C			±0.1	μA
						–55°C to 85°C			±1	
						–55°C to 125°C			±1	
Input Leakage Current (Any Control)	I_{IL}		V_{CC} or GND	5.5	0	25°C			±0.1	μA
						–55°C to 85°C			±1	
						–55°C to 125°C			±1	

Over operating free-air temperature range, V_{SUPPLY} = ±5 V, and R_L = 100 Ω, (unless otherwise noted)[(1)]

PARAMETER		TEST CONDITIONS					MIN	TYP	MAX	UNIT
Quiescent Device Current	I_{CC}	When V_{IS} = V_{EE}, V_{OS} = V_{CC}, When V_{IS} = V_{CC}, V_{OS} = V_{EE}	Any voltage between V_{CC} and GND	5.5	0	25°C			8	μA
						–55°C to 85°C			80	
						–55°C to 125°C			160	
				5.5	-4.5	25°C			16	
						–55°C to 85°C			160	
						–55°C to 125°C			320	
Additional Quiescent Device Current Per Input Pin: 1 Unit Load	▲I_{CC} (1)	V_{CC} - 2.1		4.5 to 5.5		25°C		100	360	μA
						–55°C to 85°C			450	
						–55°C to 125°C			490	
CONTROL (ADDRESS OR INHIBIT), V_C										

(1) For dual-supply systems theoretical worst case (VI = 2.4V, VCC = 5.5V) specification is 1.8mA

9 Switching Characteristics HC

over operating free-air temperature range (unless otherwise noted)

Parameter		VEE (V)	VCC (V)	Test Conditions		MIN	NOM	MAX	UNIT
Propagation Delay, Switch In to Out	t_{PLH}, t_{PHL}	0	2	50pF	25°C			60	ns
		0	2		–40°C to +85°C			75	
		0	2		–55°C to +125°C			90	
		0	4.5		25°C			12	
		0	4.5		–40°C to +85°C			15	
		0	4.5		–55°C to +125°C			18	
		0	6		25°C			10	
		0	6		–40°C to +85°C			13	
		0	6		–55°C to +125°C			15	
		-4.5	4.5		25°C			8	
		-4.5	4.5		–40°C to +85°C			10	
		-4.5	4.5		–55°C to +125°C			12	

Copyright © 2024 Texas Instruments Incorporated

over operating free-air temperature range (unless otherwise noted)

Parameter		VEE (V)	VCC (V)	Test Conditions		MIN	NOM	MAX	UNIT
Turn "ON" Time !E to Out	tPZH, tPZL	0	2	50pF	25°C			205	ns
		0	2		–40°C to +85°C			255	
		0	2		–55°C to +125°C			310	
		0	4.5		25°C			41	
		0	4.5		–40°C to +85°C			51	
		0	4.5		–55°C to +125°C			62	
		0	6		25°C			35	
		0	6		–40°C to +85°C			43	
		0	6		–55°C to +125°C			53	
		-4.5	4.5		25°C			37	
		-4.5	4.5		–40°C to +85°C			47	
		-4.5	4.5		–55°C to +125°C			56	
		-	5	15pF	25°C		8		
Turn "ON" Time nS to Out	t_{PZH}, t_{PZL}	0	2	50pF	25°C			175	ns
		0	2		–40°C to +85°C			220	
		0	2		–55°C to +125°C			265	
		0	4.5		25°C			35	
		0	4.5		–40°C to +85°C			44	
		0	4.5		–55°C to +125°C			53	
		0	6		25°C			30	
		0	6		–40°C to +85°C			37	
		0	6		–55°C to +125°C			45	
		-4.5	4.5		25°C			34	
		-4.5	4.5		–40°C to +85°C			43	
		-4.5	4.5		–55°C to +125°C			51	
		-	5	15pF	25°C		14		

Copyright © 2024 Texas Instruments Incorporated

over operating free-air temperature range (unless otherwise noted)

Parameter		VEE (V)	VCC (V)	Test Conditions		MIN	NOM	MAX	UNIT
Turn "OFF" Time !E to Out	t_{PLZ}, t_{PHZ}	0	2	50pF	25°C			205	ns
		0	2		–40°C to +85°C			255	ns
		0	2		–55°C to +125°C			310	ns
		0	4.5		25°C			41	ns
		0	4.5		–40°C to +85°C			51	ns
		0	4.5		–55°C to +125°C			62	ns
		0	6		25°C			35	ns
		0	6		–40°C to +85°C			43	ns
		0	6		–55°C to +125°C			53	ns
		-4.5	4.5		25°C			37	ns
		-4.5	4.5		–40°C to +85°C			47	ns
		-4.5	4.5		–55°C to +125°C			56	ns
		-	5	15pF	25°C		8		ns
Turn "OFF" Time nS to Out	t_{PLZ}, t_{PHZ}	0	2	50pF	25°C			175	ns
		0	2		–40°C to +85°C			220	
		0	2		–55°C to +125°C			265	
		0	4.5		25°C			35	
		0	4.5		–40°C to +85°C			44	
		0	4.5		–55°C to +125°C			53	
		0	6		25°C			30	
		0	6		–40°C to +85°C			37	
		0	6		–55°C to +125°C			45	
		-4.5	4.5		25°C			34	
		-4.5	4.5		–40°C to +85°C			43	
		-4.5	4.5		–55°C to +125°C			51	
		-	5	15pF	25°C		14		

Copyright © 2024 Texas Instruments Incorporated

over operating free-air temperature range (unless otherwise noted)

Parameter		VEE (V)	VCC (V)	Test Conditions		MIN	NOM	MAX	UNIT
Input (Control) Capacitance	C_I	-	-	-	25°C			10	pF
Input (Control) Capacitance		-	-		–40°C to +85°C			10	
Input (Control) Capacitance		-	-		–55°C to +125°C			10	
Power dissipation capacitance(1)	C_{PD}	-	5		25°C		42		

10 Switching Characteristics HCT

over operating free-air temperature range (unless otherwise noted)

Parameter		VEE (V)	VCC (V)	Test Conditions		MIN	NOM	MAX	UNIT
Propagation Delay, Switch In to Out	t_{PLH}, t_{PHL}	0	4.5	50pF	25°C			12	ns
					–40°C to +85°C			15	
					–55°C to +125°C			18	
		-4.5	4.5		25°C			8	
					–40°C to +85°C			10	
					–55°C to +125°C			12	
Turn "ON" Time !E to Out	tPZH, tPZL	0	4.5	50pF	25°C			44	ns
					–40°C to +85°C			55	
					–55°C to +125°C			66	
		-4.5	4.5		25°C			42	
					–40°C to +85°C			53	
					–55°C to +125°C			63	
		-	5	15pF	25°C		18		
		0	4.5	50pF	25°C			56	
					–40°C to +85°C			70	
					–55°C to +125°C			85	
		-4.5	4.5		25°C			42	
					–40°C to +85°C			53	
					–55°C to +125°C			63	
		-	5	15pF	25°C		24		

over operating free-air temperature range (unless otherwise noted)

Parameter		VEE (V)	VCC (V)	Test Conditions		MIN	NOM	MAX	UNIT
Turn "ON" Time nS to Out	t_{PZH}, t_{PZL}	0	4.5	50pF	25°C			40	ns
					–40°C to +85°C			53	
					–55°C to +125°C			60	
		-4.5	4.5		25°C			34	
					–40°C to +85°C			43	
					–55°C to +125°C			51	
		0	5	15pF	25°C		17		
		0	4.5	50pF	25°C			50	
					–40°C to +85°C			63	
					–55°C to +125°C			75	
		-4.5	4.5		25°C			34	
					–40°C to +85°C			43	
					–55°C to +125°C			51	
		-	5	15pF	25°C		18		
Turn "OFF" Time !E to Out	t_{PLZ}, t_{PHZ}	0	4.5	50pF	25°C			50	ns
					–40°C to +85°C			63	
					–55°C to +125°C			75	
		-4.5	4.5		25°C			46	
					–40°C to +85°C			58	
					–55°C to +125°C			69	
		-	5	15pF	25°C		21		
Turn "OFF" Time nS to Out	t_{PLZ}, t_{PHZ}	0	4.5	50pF	25°C			44	ns
					–40°C to +85°C			55	
					–55°C to +125°C			66	
		-4.5	4.5		25°C			40	
					–40°C to +85°C			50	
					–55°C to +125°C			60	
		-	5	15pF	25°C		18		

Copyright © 2024 Texas Instruments Incorporated

over operating free-air temperature range (unless otherwise noted)

Parameter		VEE (V)	VCC (V)	Test Conditions		MIN	NOM	MAX	UNIT
Input (Control) Capacitance	C_I	-	-	-	25°C			10	pF
		-	-	-	–40°C to +85°C			10	
		-	-	-	–55°C to +125°C			10	
Power dissipation capacitance(1)	C_{PD}	-	5	-	25°C		47		

11 Analog Channel Specifications

over operating free-air temperature range (unless otherwise noted)

Parameter	Test Conditions		HC, HCT TYPES	V_{CC} (V)	MIN	NOM	MAX	UNIT
f_{MAX} Minimum switch frequency response at –3 dB			HC	4.5		200		MHz
			HCT	4.5		200		
THD Sine-wave distortion	1kHz, V_{IS} = $4V_{P-P}$		HC	4.5		0.078		%
	1kHz, V_{IS} = $8V_{P-P}$			9		0.018		
	1kHz, V_{IS} = $4V_{P-P}$		HCT	4.5		0.078		
	1kHz, V_{IS} = $8V_{P-P}$			9		0.018		
Switch "OFF" Signal Feedthrough			HC	4.5		-62		dB
			HCT	4.5		-62		
Switch Input Capacitance, C_S			HC	-		5		pF
			HCT	-		5		

12 HCT Input Loading Table

INPUT	UNIT LOADS(1)
All	0.5

(1) Unit Load is ΔI_{CC} limit specified in DC Electrical Table, e.g., 360µA max at 25°C

13 Recommended Operating Area as a Function of Supply Voltage

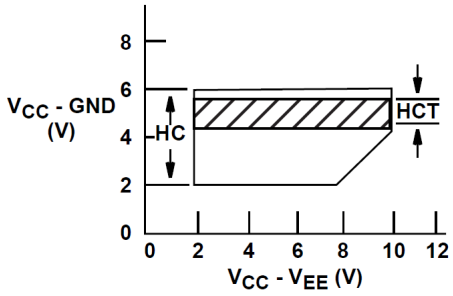

Figure 13-1.

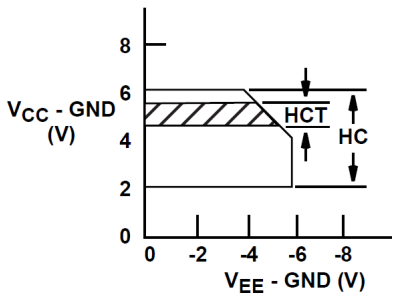

Figure 13-2.

14 Typical Performance Curves

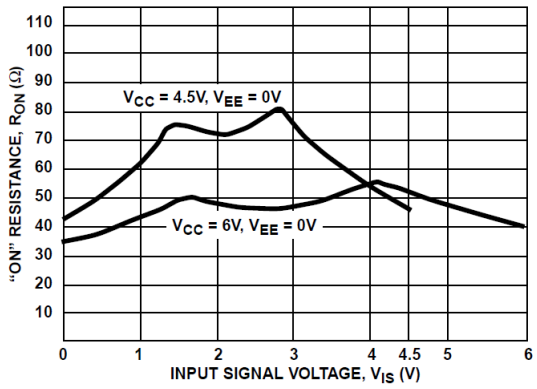

Figure 14-1. Typical On Resistance vs Input Signal Voltage

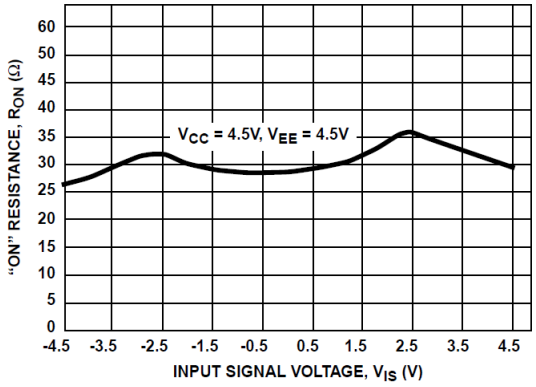

Figure 14-2. Typical On Resistance vs Input Signal Voltage

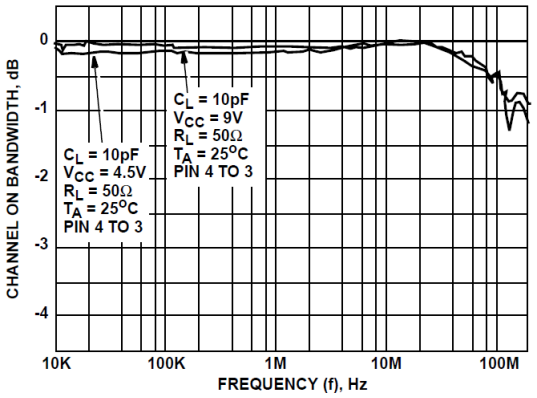

Figure 14-3. Switch Frequency Response

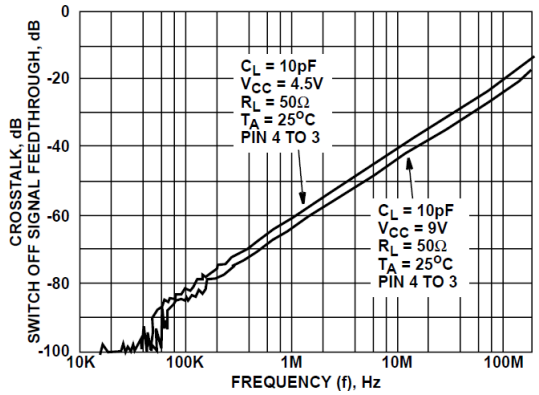

Figure 14-4. Switch-Off Signal Feedthrough and Crosstalk vs Frequency

Copyright © 2024 Texas Instruments Incorporated

15 Parameter Measurement Information

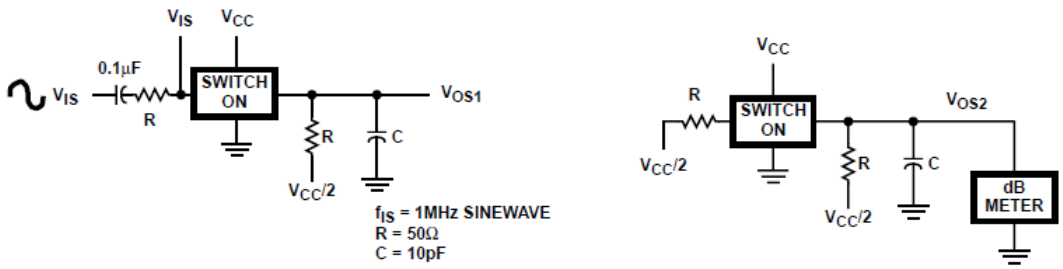

Figure 15-1. Crosstalk Between Two Switches Test Circuit

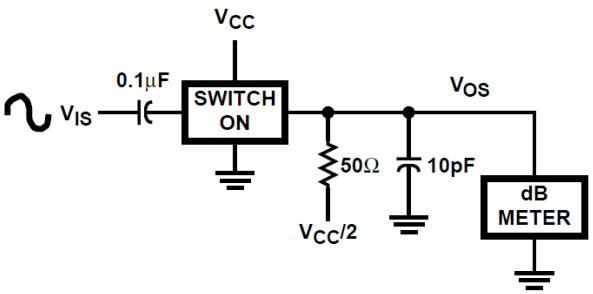

Figure 15-2. Frequency Response Test Circuit

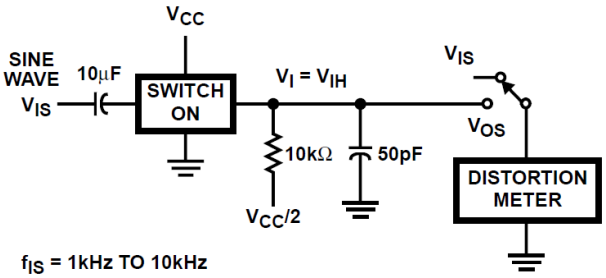

Figure 15-3. Total Harmonic Distortion Test Circuit

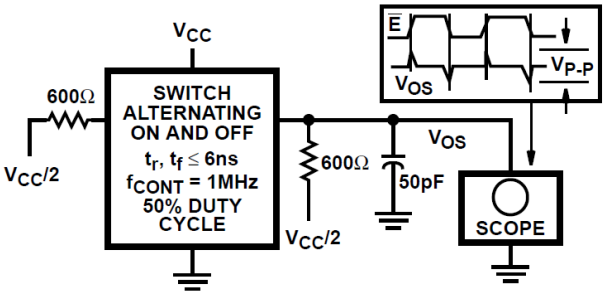

Figure 15-4. Control-To-Switch Feedthrough Noise Test Circuit

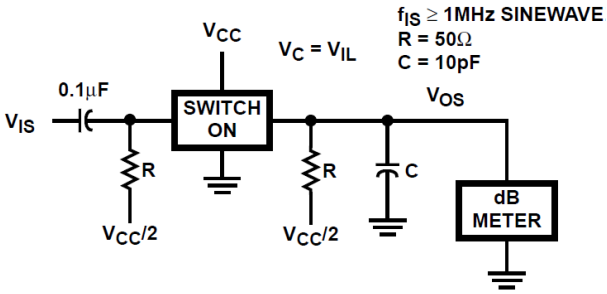

Figure 15-5. Switch Off Signal Feedthrough

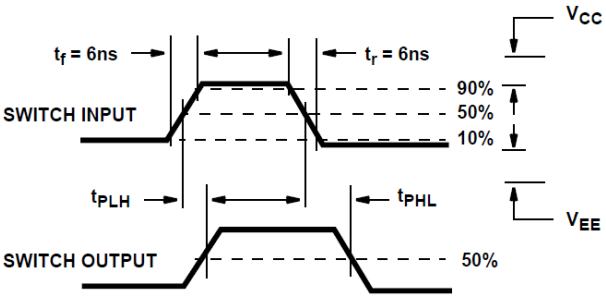

Figure 15-6. Switch Propagation Delay Times

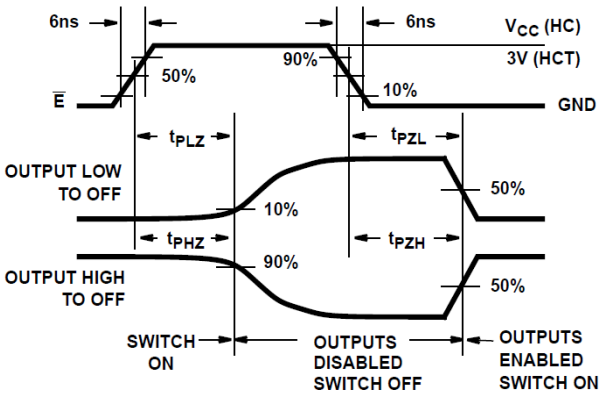

Figure 15-7. Switch Turn-On and Turn-Off Propagation Delay Times Waveforms

16 Detailed Description

16.1 Functional Block Diagram

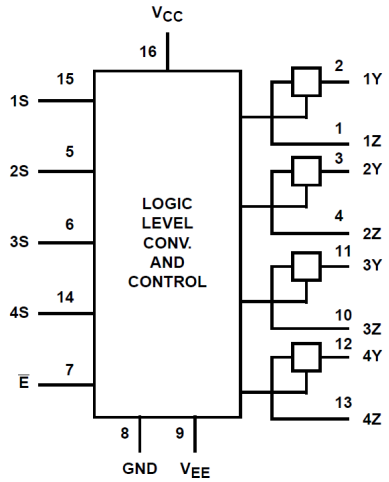

16.2 Device Functional Modes

Table 16-1. Truth Table(1)

INPUTS		SWITCH
E	S	
L	L	OFF
L	H	ON
H	X	OFF

(1) H = High Level Voltage, L = Low Level Voltage, X = Do not Care

Copyright © 2024 Texas Instruments Incorporated

17 Device and Documentation Support

TI offers an extensive line of development tools. Tools and software to evaluate the performance of the device, generate code, and develop solutions are listed below.

17.1 Receiving Notification of Documentation Updates

To receive notification of documentation updates, navigate to the device product folder on ti.com. Click on *Notifications* to register and receive a weekly digest of any product information that has changed. For change details, review the revision history included in any revised document.

17.2 Support Resources

TI E2E™ support forums are an engineer's go-to source for fast, verified answers and design help — straight from the experts. Search existing answers or ask your own question to get the quick design help you need.

Linked content is provided "AS IS" by the respective contributors. They do not constitute TI specifications and do not necessarily reflect TI's views; see TI's Terms of Use.

17.3 Trademarks

TI E2E™ is a trademark of Texas Instruments.
All trademarks are the property of their respective owners.

17.4 Electrostatic Discharge Caution

This integrated circuit can be damaged by ESD. Texas Instruments recommends that all integrated circuits be handled with appropriate precautions. Failure to observe proper handling and installation procedures can cause damage.

ESD damage can range from subtle performance degradation to complete device failure. Precision integrated circuits may be more susceptible to damage because very small parametric changes could cause the device not to meet its published specifications.

17.5 Glossary

TI Glossary	This glossary lists and explains terms, acronyms, and definitions.

18 Revision History

NOTE: Page numbers for previous revisions may differ from page numbers in the current version.

Changes from Revision D (October 2003) to Revision E (July 2024)	Page
• Updated the numbering format for tables, figures, and cross-references throughout the document	1
• Updated thermal information	5
• Updated electrical specifications	6
• Updated switching specifications	10
• Updated analog channel specifications	15
• Updated orderable information	19

19 Mechanical, Packaging, and Orderable Information

The following pages include mechanical, packaging, and orderable information. This information is the most current data available for the designated devices. This data is subject to change without notice and revision of this document. For browser-based versions of this data sheet, refer to the left-hand navigation.

Copyright © 2024 Texas Instruments Incorporated

PACKAGING INFORMATION

Orderable part number	Status (1)	Material type (2)	Package | Pins	Package qty | Carrier	RoHS (3)	Lead finish/ Ball material (4)	MSL rating/ Peak reflow (5)	Op temp (°C)	Part marking (6)
CD54HC4316F3A	Active	Production	CDIP (J) | 16	25 | TUBE	No	SNPB	N/A for Pkg Type	-55 to 125	CD54HC4316F3A
CD54HC4316F3A.A	Active	Production	CDIP (J) | 16	25 | TUBE	No	SNPB	N/A for Pkg Type	-55 to 125	CD54HC4316F3A
CD74HC4316E	NRND	Production	PDIP (N) | 16	25 | TUBE	Yes	NIPDAU	N/A for Pkg Type	-55 to 125	CD74HC4316E
CD74HC4316E.A	NRND	Production	PDIP (N) | 16	25 | TUBE	Yes	NIPDAU	N/A for Pkg Type	-55 to 125	CD74HC4316E
CD74HC4316M	Obsolete	Production	SOIC (D) | 16	-	-	Call TI	Call TI	-55 to 125	HC4316M
CD74HC4316M96	Active	Production	SOIC (D) | 16	2500 | LARGE T&R	Yes	NIPDAU	Level-1-260C-UNLIM	-55 to 125	HC4316M
CD74HC4316M96.A	Active	Production	SOIC (D) | 16	2500 | LARGE T&R	Yes	NIPDAU	Level-1-260C-UNLIM	-55 to 125	HC4316M
CD74HC4316NSR	NRND	Production	SOP (NS) | 16	2000 | LARGE T&R	Yes	NIPDAU	Level-1-260C-UNLIM	-55 to 125	HC4316M
CD74HC4316NSR.A	NRND	Production	SOP (NS) | 16	2000 | LARGE T&R	Yes	NIPDAU	Level-1-260C-UNLIM	-55 to 125	HC4316M
CD74HC4316PW	Obsolete	Production	TSSOP (PW) | 16	-	-	Call TI	Call TI	-55 to 125	HJ4316
CD74HC4316PWR	Active	Production	TSSOP (PW) | 16	2000 | LARGE T&R	Yes	NIPDAU	Level-1-260C-UNLIM	-55 to 125	HJ4316
CD74HC4316PWR.A	Active	Production	TSSOP (PW) | 16	2000 | LARGE T&R	Yes	NIPDAU	Level-1-260C-UNLIM	-55 to 125	HJ4316
CD74HCT4316E	NRND	Production	PDIP (N) | 16	25 | TUBE	Yes	NIPDAU	N/A for Pkg Type	-55 to 125	CD74HCT4316E
CD74HCT4316E.A	NRND	Production	PDIP (N) | 16	25 | TUBE	Yes	NIPDAU	N/A for Pkg Type	-55 to 125	CD74HCT4316E
CD74HCT4316M	NRND	Production	SOIC (D) | 16	40 | TUBE	Yes	NIPDAU	Level-1-260C-UNLIM	-55 to 125	HCT4316M
CD74HCT4316M.A	NRND	Production	SOIC (D) | 16	40 | TUBE	Yes	NIPDAU	Level-1-260C-UNLIM	-55 to 125	HCT4316M
CD74HCT4316M96	NRND	Production	SOIC (D) | 16	2500 | LARGE T&R	Yes	NIPDAU	Level-1-260C-UNLIM	-55 to 125	HCT4316M
CD74HCT4316M96.A	NRND	Production	SOIC (D) | 16	2500 | LARGE T&R	Yes	NIPDAU	Level-1-260C-UNLIM	-55 to 125	HCT4316M

(1) **Status:** For more details on status, see our product life cycle.

(2) **Material type:** When designated, preproduction parts are prototypes/experimental devices, and are not yet approved or released for full production. Testing and final process, including without limitation quality assurance, reliability performance testing, and/or process qualification, may not yet be complete, and this item is subject to further changes or possible discontinuation. If available for ordering, purchases will be subject to an additional waiver at checkout, and are intended for early internal evaluation purposes only. These items are sold without warranties of any kind.

(3) **RoHS values:** Yes, No, RoHS Exempt. See the TI RoHS Statement for additional information and value definition.

(4) **Lead finish/Ball material:** Parts may have multiple material finish options. Finish options are separated by a vertical ruled line. Lead finish/Ball material values may wrap to two lines if the finish value exceeds the maximum column width.

(5) **MSL rating/Peak reflow:** The moisture sensitivity level ratings and peak solder (reflow) temperatures. In the event that a part has multiple moisture sensitivity ratings, only the lowest level per JEDEC standards is shown. Refer to the shipping label for the actual reflow temperature that will be used to mount the part to the printed circuit board.

(6) **Part marking:** There may be an additional marking, which relates to the logo, the lot trace code information, or the environmental category of the part.

Multiple part markings will be inside parentheses. Only one part marking contained in parentheses and separated by a "~" will appear on a part. If a line is indented then it is a continuation of the previous line and the two combined represent the entire part marking for that device.

Important Information and Disclaimer: The information provided on this page represents TI's knowledge and belief as of the date that it is provided. TI bases its knowledge and belief on information provided by third parties, and makes no representation or warranty as to the accuracy of such information. Efforts are underway to better integrate information from third parties. TI has taken and continues to take reasonable steps to provide representative and accurate information but may not have conducted destructive testing or chemical analysis on incoming materials and chemicals. TI and TI suppliers consider certain information to be proprietary, and thus CAS numbers and other limited information may not be available for release.

In no event shall TI's liability arising out of such information exceed the total purchase price of the TI part(s) at issue in this document sold by TI to Customer on an annual basis.

OTHER QUALIFIED VERSIONS OF CD54HC4316, CD74HC4316 :

- Catalog : CD74HC4316
- Military : CD54HC4316

NOTE: Qualified Version Definitions:

- Catalog - TI's standard catalog product
- Military - QML certified for Military and Defense Applications

TAPE AND REEL INFORMATION

REEL DIMENSIONS

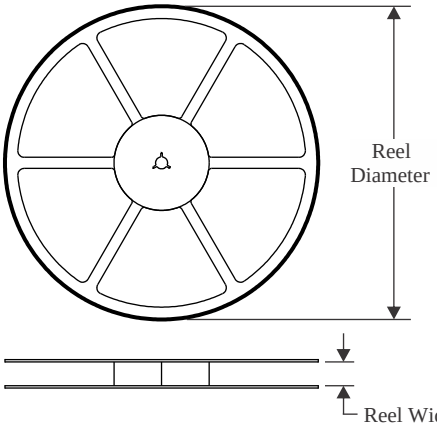

TAPE DIMENSIONS

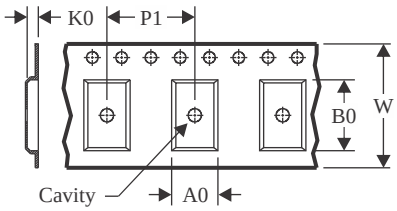

A0	Dimension designed to accommodate the component width
B0	Dimension designed to accommodate the component length
K0	Dimension designed to accommodate the component thickness
W	Overall width of the carrier tape
P1	Pitch between successive cavity centers

QUADRANT ASSIGNMENTS FOR PIN 1 ORIENTATION IN TAPE

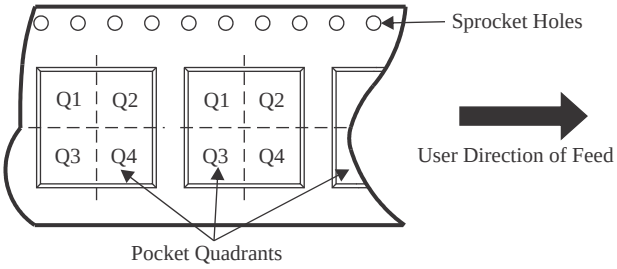

*All dimensions are nominal

Device	Package Type	Package Drawing	Pins	SPQ	Reel Diameter (mm)	Reel Width W1 (mm)	A0 (mm)	B0 (mm)	K0 (mm)	P1 (mm)	W (mm)	Pin1 Quadrant
CD74HC4316M96	SOIC	D	16	2500	330.0	16.4	6.5	10.3	2.1	8.0	16.0	Q1
CD74HC4316NSR	SOP	NS	16	2000	330.0	16.4	8.2	10.5	2.5	12.0	16.0	Q1
CD74HC4316PWR	TSSOP	PW	16	2000	330.0	12.4	6.9	5.6	1.6	8.0	12.0	Q1
CD74HC4316PWR	TSSOP	PW	16	2000	330.0	12.4	6.9	5.6	1.6	8.0	12.0	Q1
CD74HCT4316M96	SOIC	D	16	2500	330.0	16.4	6.5	10.3	2.1	8.0	16.0	Q1

TAPE AND REEL BOX DIMENSIONS

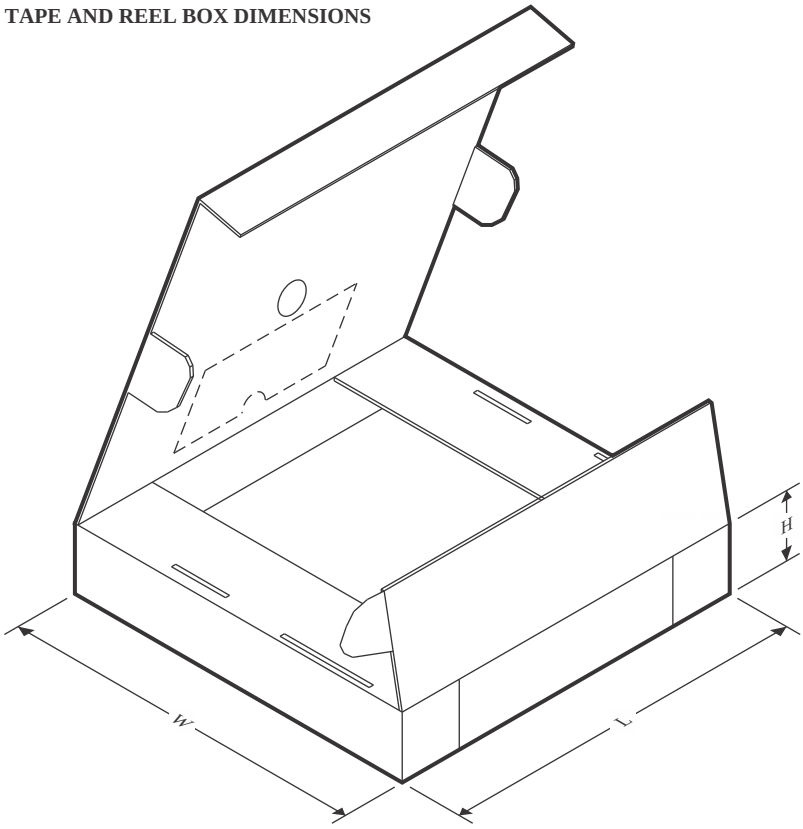

*All dimensions are nominal

Device	Package Type	Package Drawing	Pins	SPQ	Length (mm)	Width (mm)	Height (mm)
CD74HC4316M96	SOIC	D	16	2500	353.0	353.0	32.0
CD74HC4316NSR	SOP	NS	16	2000	356.0	356.0	35.0
CD74HC4316PWR	TSSOP	PW	16	2000	356.0	356.0	35.0
CD74HC4316PWR	TSSOP	PW	16	2000	356.0	356.0	35.0
CD74HCT4316M96	SOIC	D	16	2500	340.5	336.1	32.0

TUBE

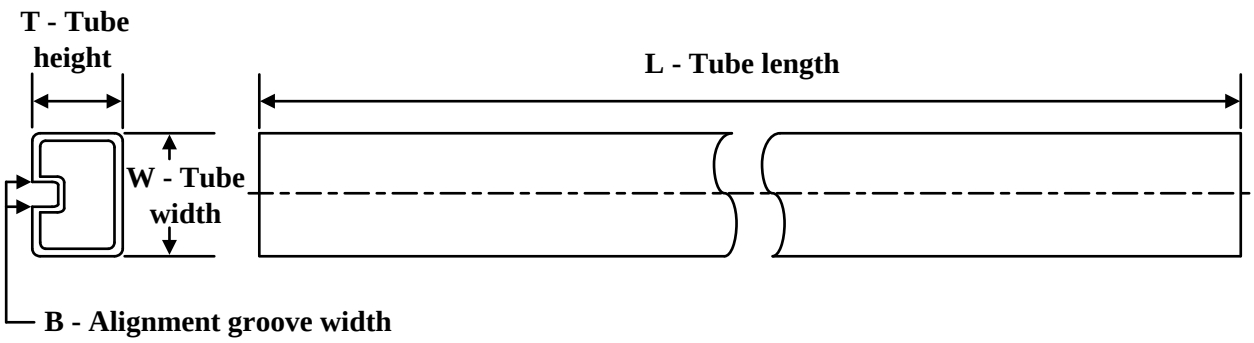

*All dimensions are nominal

Device	Package Name	Package Type	Pins	SPQ	L (mm)	W (mm)	T (µm)	B (mm)
CD74HC4316E	N	PDIP	16	25	506	13.97	11230	4.32
CD74HC4316E	N	PDIP	16	25	506	13.97	11230	4.32
CD74HC4316E.A	N	PDIP	16	25	506	13.97	11230	4.32
CD74HC4316E.A	N	PDIP	16	25	506	13.97	11230	4.32
CD74HCT4316E	N	PDIP	16	25	506	13.97	11230	4.32
CD74HCT4316E	N	PDIP	16	25	506	13.97	11230	4.32
CD74HCT4316E.A	N	PDIP	16	25	506	13.97	11230	4.32
CD74HCT4316E.A	N	PDIP	16	25	506	13.97	11230	4.32
CD74HCT4316M	D	SOIC	16	40	507	8	3940	4.32
CD74HCT4316M.A	D	SOIC	16	40	507	8	3940	4.32

D (R–PDSO–G16) PLASTIC SMALL OUTLINE

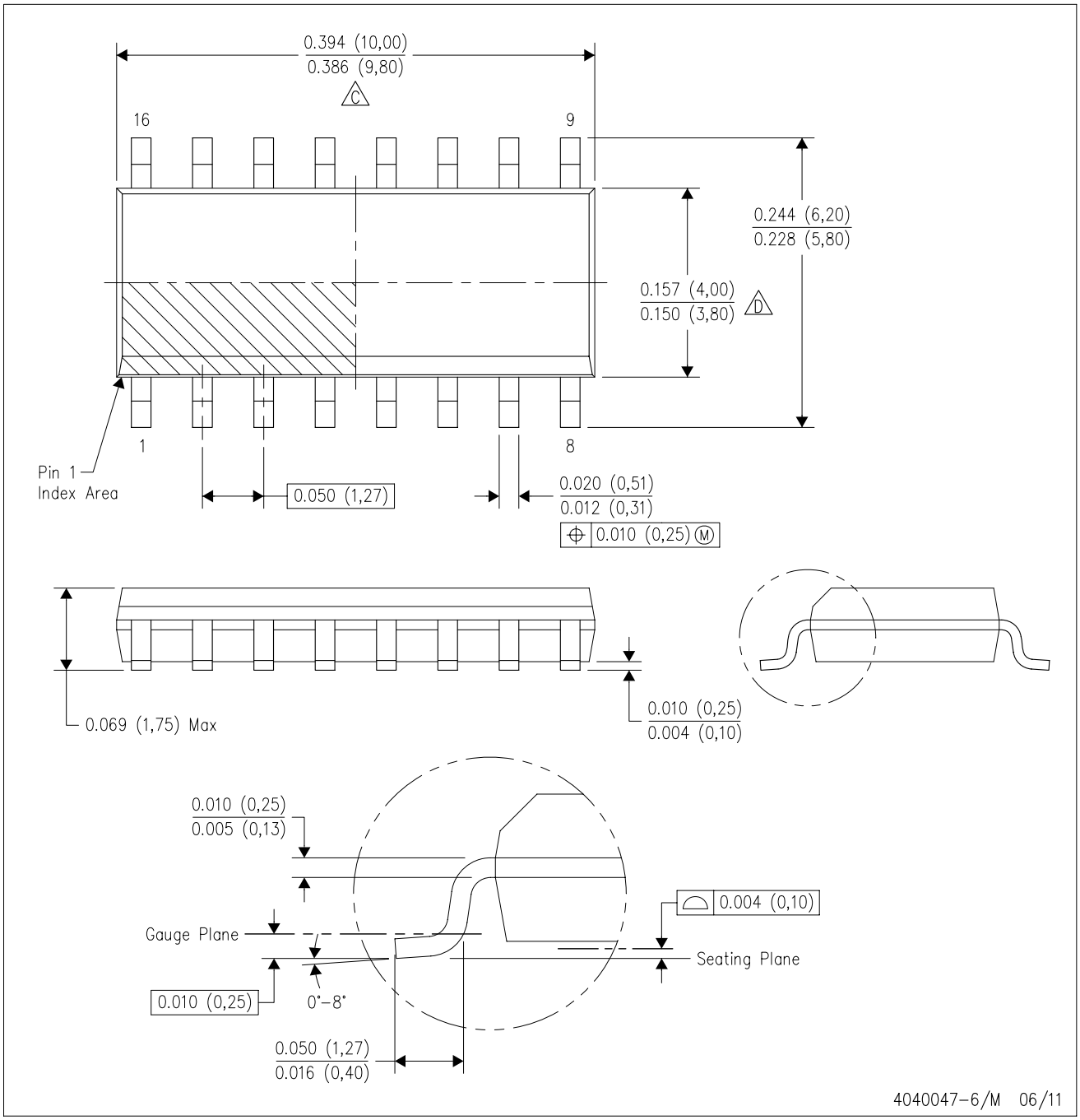

NOTES:
A. All linear dimensions are in inches (millimeters).
B. This drawing is subject to change without notice.
C. Body length does not include mold flash, protrusions, or gate burrs. Mold flash, protrusions, or gate burrs shall not exceed 0.006 (0,15) each side.
D. Body width does not include interlead flash. Interlead flash shall not exceed 0.017 (0,43) each side.
E. Reference JEDEC MS–012 variation AC.

PW0016A

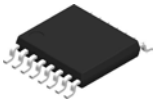

PACKAGE OUTLINE

TSSOP - 1.2 mm max height

SMALL OUTLINE PACKAGE

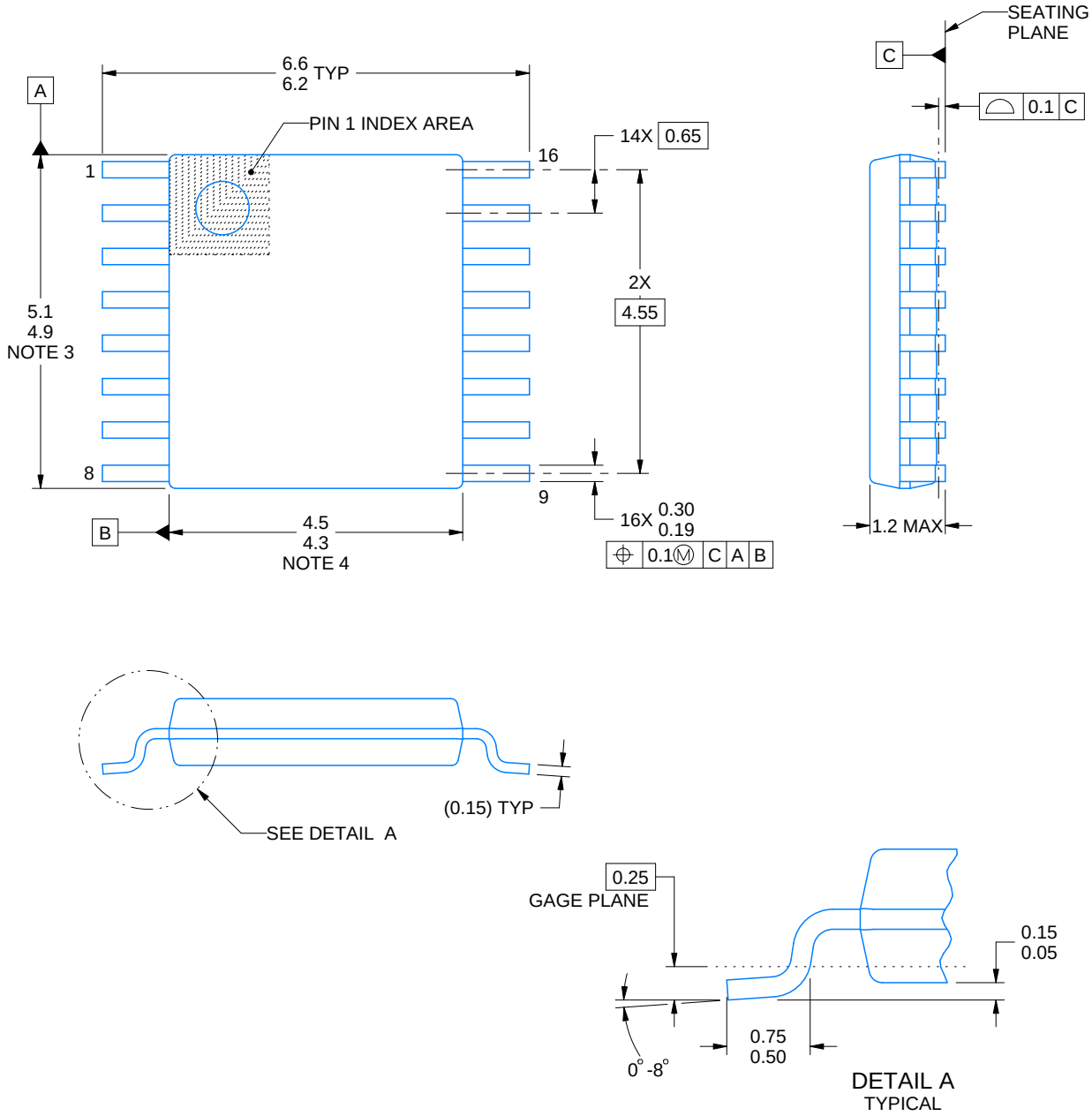

NOTES:

1. All linear dimensions are in millimeters. Any dimensions in parenthesis are for reference only. Dimensioning and tolerancing per ASME Y14.5M.
2. This drawing is subject to change without notice.
3. This dimension does not include mold flash, protrusions, or gate burrs. Mold flash, protrusions, or gate burrs shall not exceed 0.15 mm per side.
4. This dimension does not include interlead flash. Interlead flash shall not exceed 0.25 mm per side.
5. Reference JEDEC registration MO-153.

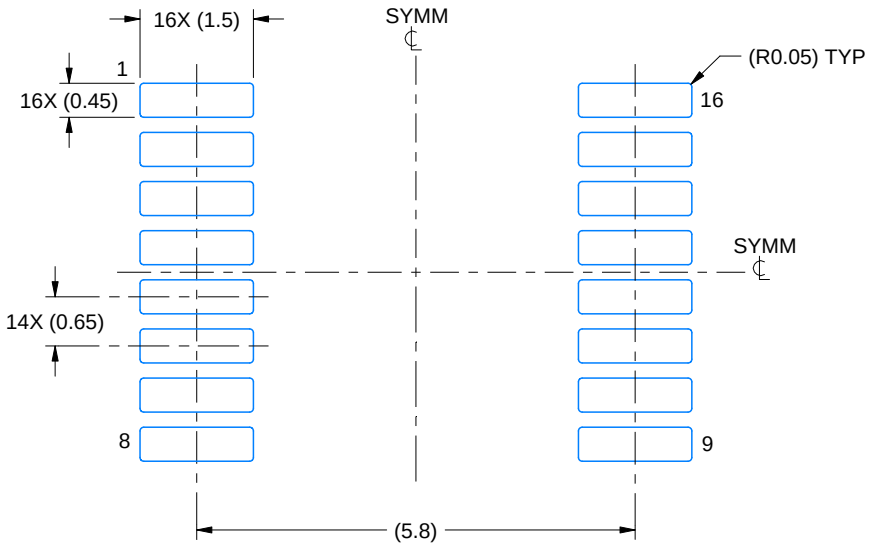

LAND PATTERN EXAMPLE
EXPOSED METAL SHOWN
SCALE: 10X

NON-SOLDER MASK DEFINED (PREFERRED)

SOLDER MASK DEFINED

SOLDER MASK DETAILS

4220204/A 02/2017

NOTES: (continued)

6. Publication IPC-7351 may have alternate designs.
7. Solder mask tolerances between and around signal pads can vary based on board fabrication site.

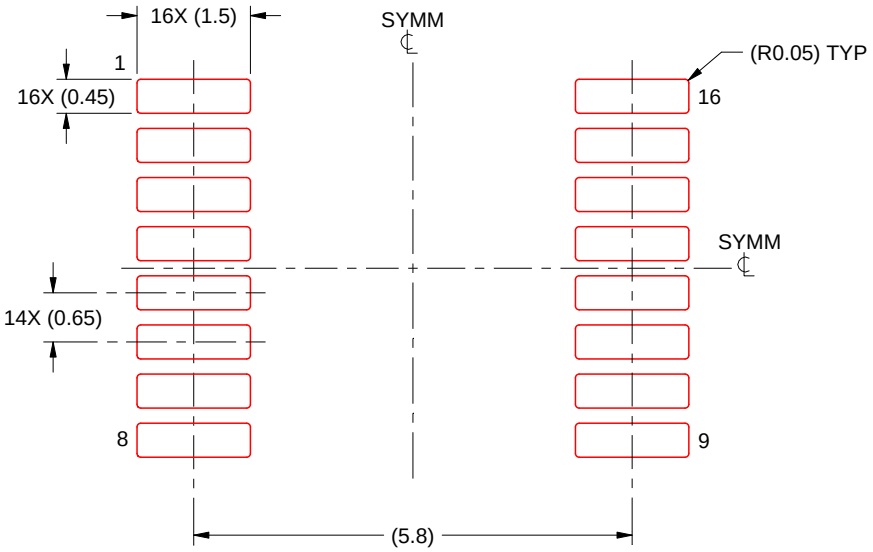

SOLDER PASTE EXAMPLE
BASED ON 0.125 mm THICK STENCIL
SCALE: 10X

4220204/A 02/2017

NOTES: (continued)

8. Laser cutting apertures with trapezoidal walls and rounded corners may offer better paste release. IPC-7525 may have alternate design recommendations.
9. Board assembly site may have different recommendations for stencil design.

MECHANICAL DATA

NS (R-PDSO-G)** **PLASTIC SMALL-OUTLINE PACKAGE**

14-PINS SHOWN

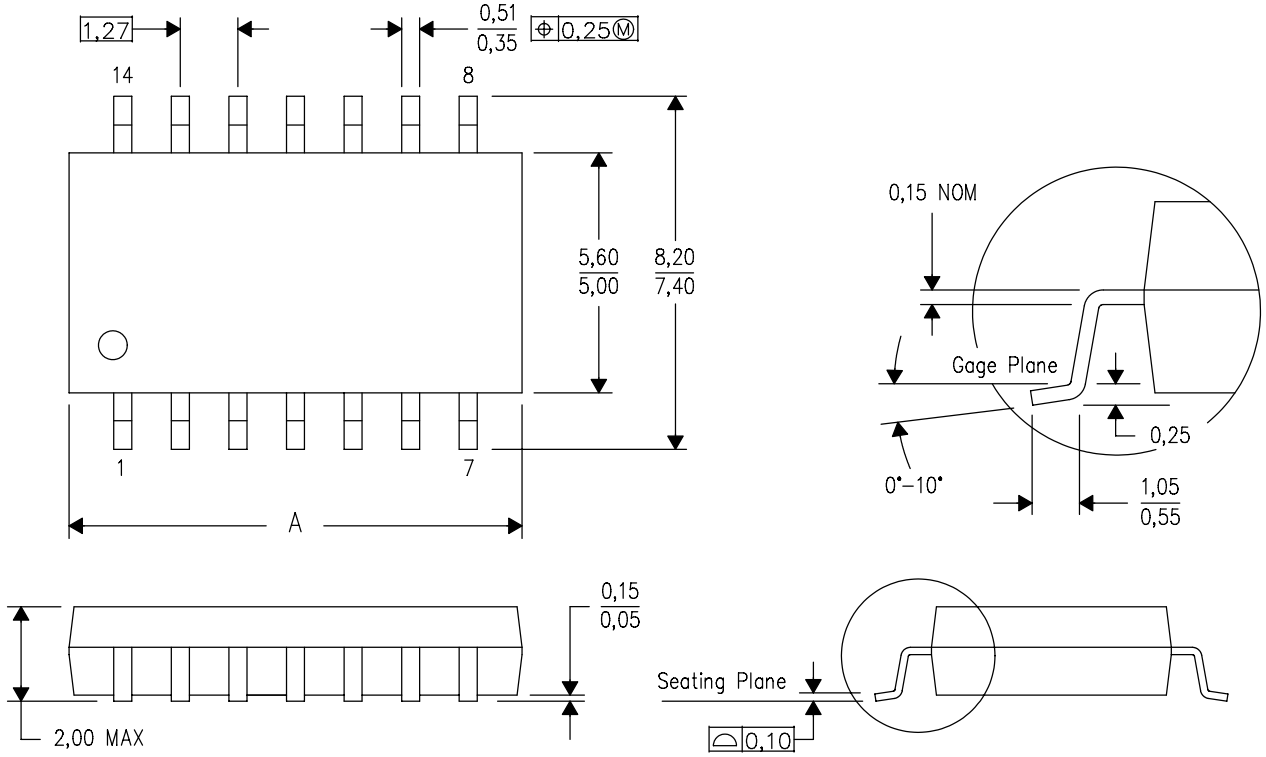

DIM \ PINS **	14	16	20	24
A MAX	10,50	10,50	12,90	15,30
A MIN	9,90	9,90	12,30	14,70

4040062/C 03/03

NOTES:
A. All linear dimensions are in millimeters.
B. This drawing is subject to change without notice.
C. Body dimensions do not include mold flash or protrusion, not to exceed 0,15.

J (R–GDIP–T**) CERAMIC DUAL IN–LINE PACKAGE

14 LEADS SHOWN

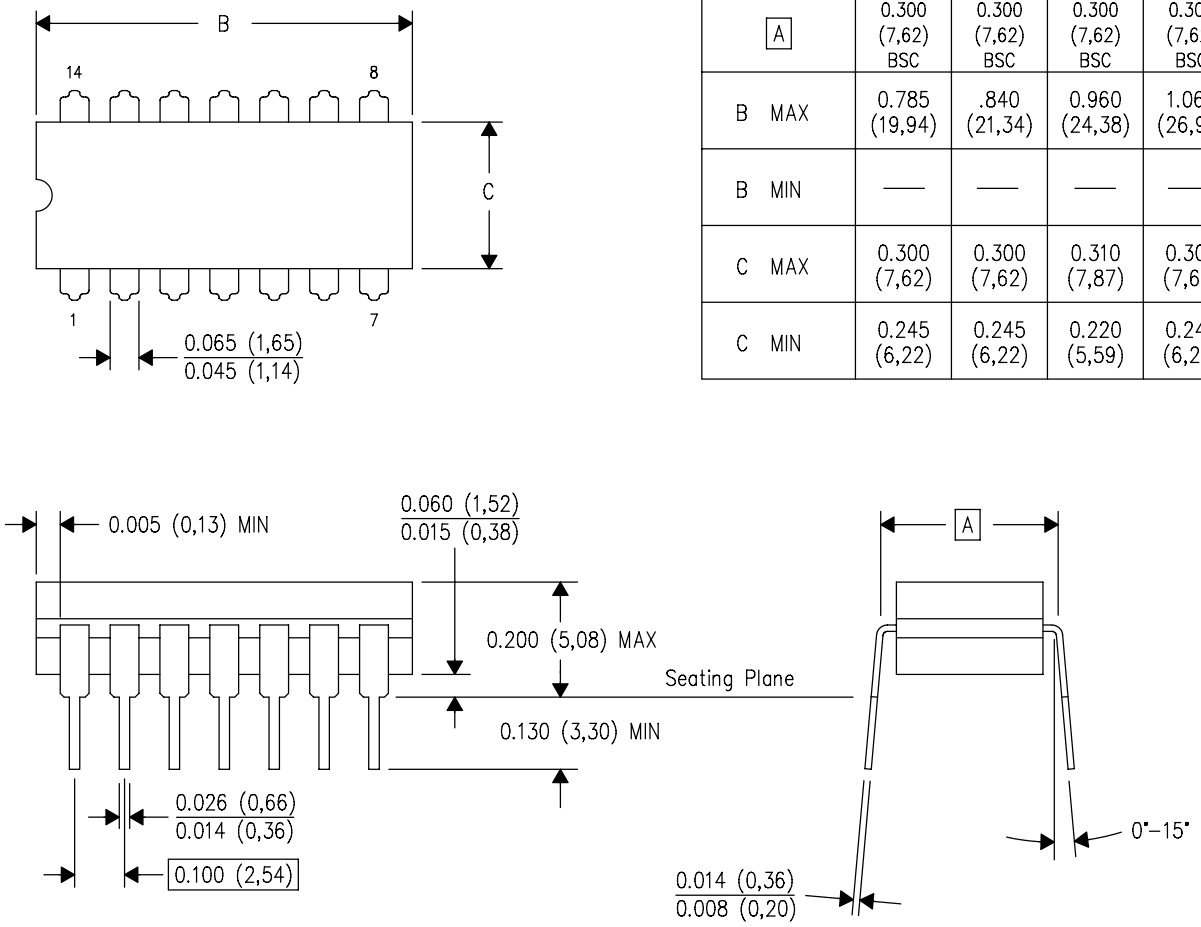

DIM \ PINS **	14	16	18	20
A	0.300 (7,62) BSC	0.300 (7,62) BSC	0.300 (7,62) BSC	0.300 (7,62) BSC
B MAX	0.785 (19,94)	.840 (21,34)	0.960 (24,38)	1.060 (26,92)
B MIN	—	—	—	—
C MAX	0.300 (7,62)	0.300 (7,62)	0.310 (7,87)	0.300 (7,62)
C MIN	0.245 (6,22)	0.245 (6,22)	0.220 (5,59)	0.245 (6,22)

4040083/F 03/03

NOTES:
- A. All linear dimensions are in inches (millimeters).
- B. This drawing is subject to change without notice.
- C. This package is hermetically sealed with a ceramic lid using glass frit.
- D. Index point is provided on cap for terminal identification only on press ceramic glass frit seal only.
- E. Falls within MIL STD 1835 GDIP1–T14, GDIP1–T16, GDIP1–T18 and GDIP1–T20.

N (R–PDIP–T**) PLASTIC DUAL–IN–LINE PACKAGE

16 PINS SHOWN

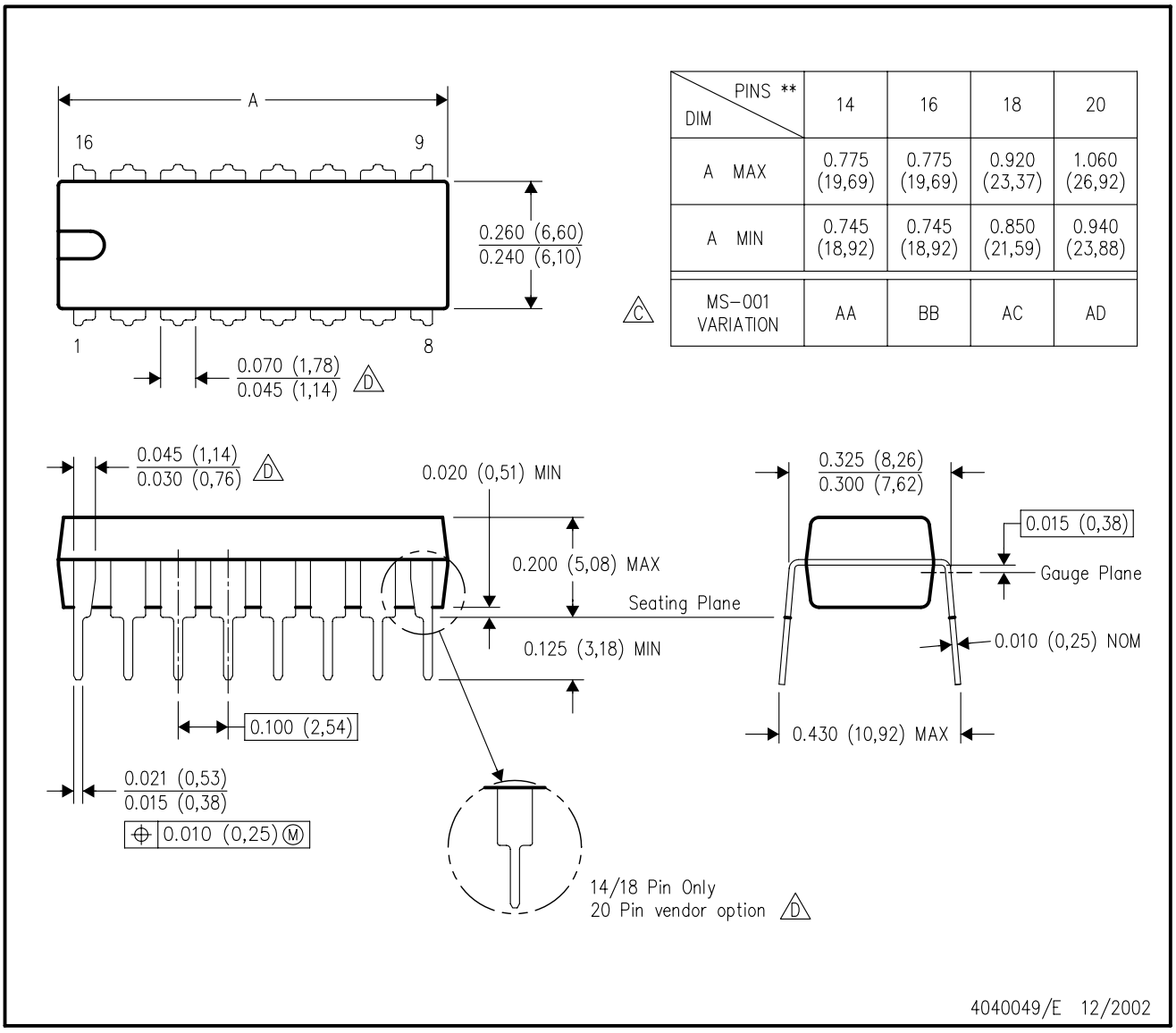

DIM \ PINS **	14	16	18	20
A MAX	0.775 (19,69)	0.775 (19,69)	0.920 (23,37)	1.060 (26,92)
A MIN	0.745 (18,92)	0.745 (18,92)	0.850 (21,59)	0.940 (23,88)
MS–001 VARIATION (C)	AA	BB	AC	AD

NOTES:
A. All linear dimensions are in inches (millimeters).
B. This drawing is subject to change without notice.
C. Falls within JEDEC MS–001, except 18 and 20 pin minimum body length (Dim A).
D. The 20 pin end lead shoulder width is a vendor option, either half or full width.

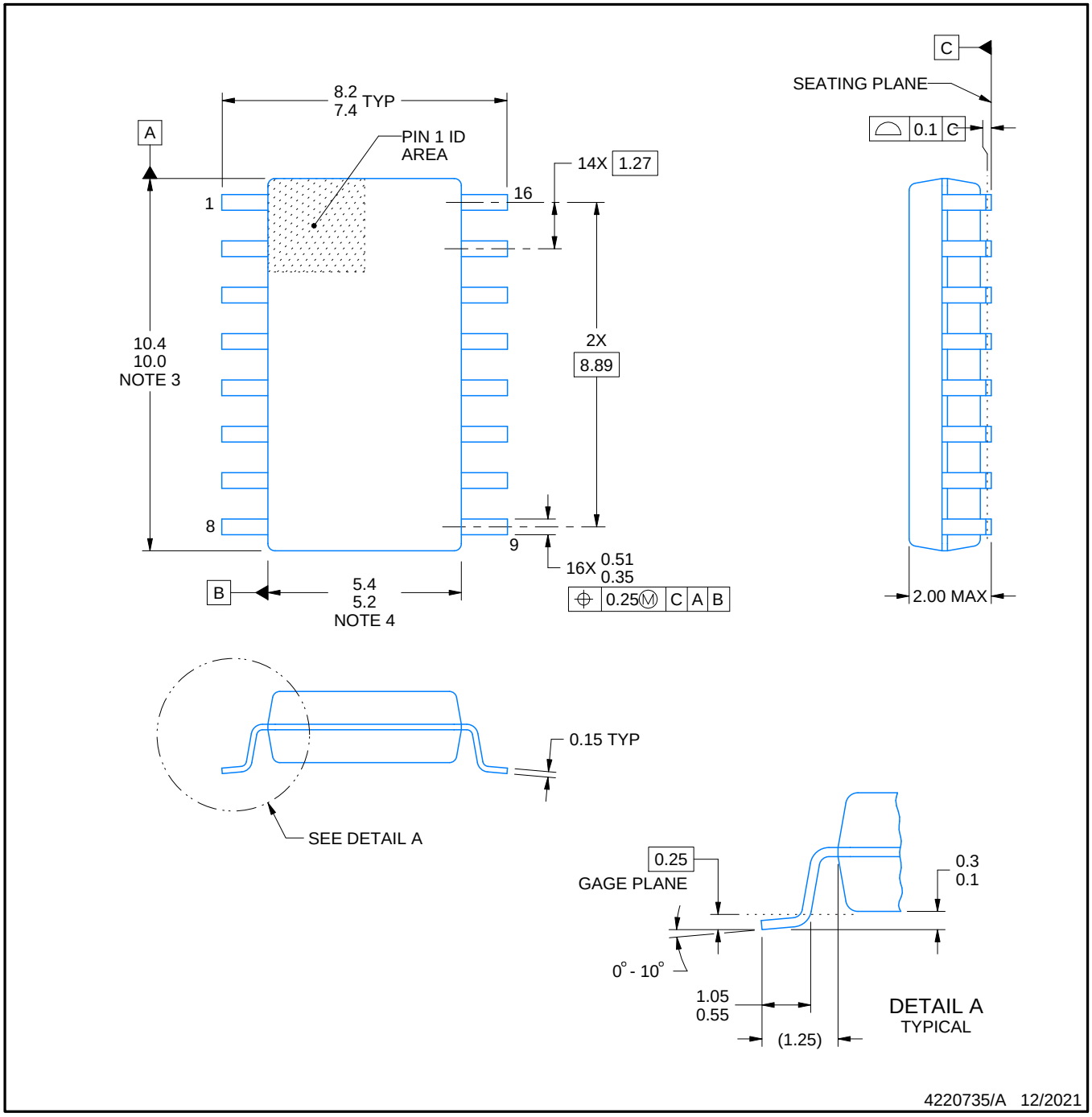

NOTES:

1. All linear dimensions are in millimeters. Dimensions in parenthesis are for reference only. Dimensioning and tolerancing per ASME Y14.5M.
2. This drawing is subject to change without notice.
3. This dimension does not include mold flash, protrusions, or gate burrs. Mold flash, protrusions, or gate burrs shall not exceed 0.15 mm, per side.
4. This dimension does not include interlead flash. Interlead flash shall not exceed 0.25 mm, per side.

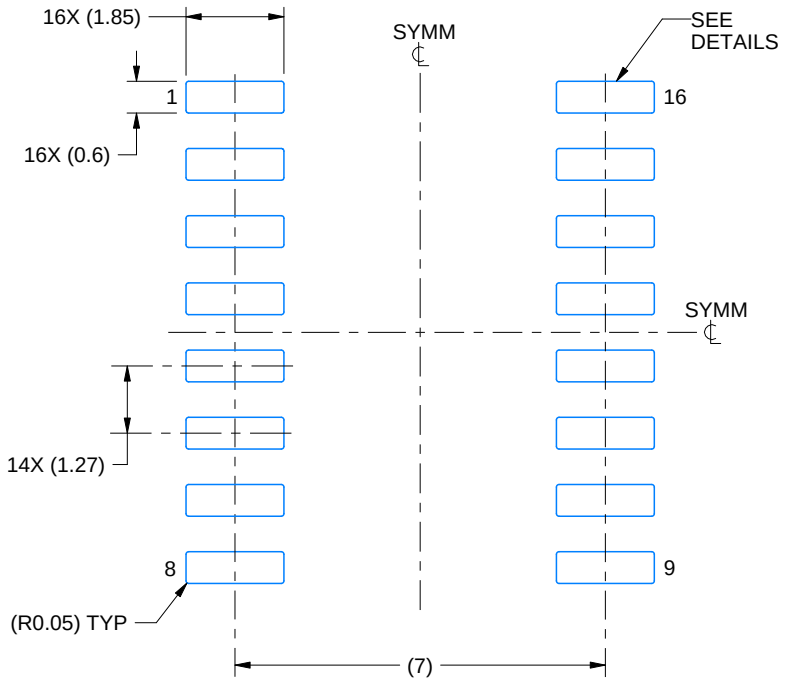

LAND PATTERN EXAMPLE
SCALE:7X

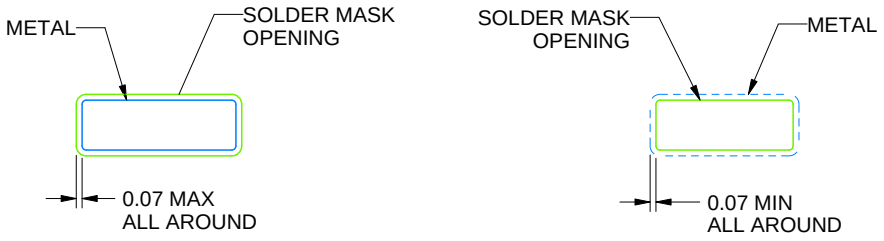

NON SOLDER MASK DEFINED

SOLDER MASK DEFINED

SOLDER MASK DETAILS

4220735/A 12/2021

NOTES: (continued)

5. Publication IPC-7351 may have alternate designs.
6. Solder mask tolerances between and around signal pads can vary based on board fabrication site.

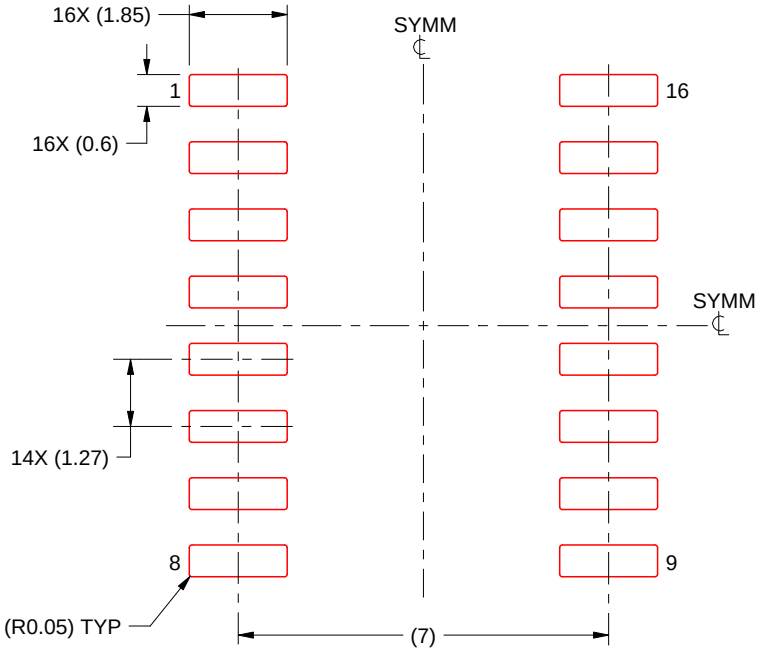

SOLDER PASTE EXAMPLE
BASED ON 0.125 mm THICK STENCIL
SCALE:7X

4220735/A 12/2021

NOTES: (continued)

7. Laser cutting apertures with trapezoidal walls and rounded corners may offer better paste release. IPC-7525 may have alternate design recommendations.
8. Board assembly site may have different recommendations for stencil design.

IMPORTANT NOTICE AND DISCLAIMER

TI PROVIDES TECHNICAL AND RELIABILITY DATA (INCLUDING DATA SHEETS), DESIGN RESOURCES (INCLUDING REFERENCE DESIGNS), APPLICATION OR OTHER DESIGN ADVICE, WEB TOOLS, SAFETY INFORMATION, AND OTHER RESOURCES “AS IS” AND WITH ALL FAULTS, AND DISCLAIMS ALL WARRANTIES, EXPRESS AND IMPLIED, INCLUDING WITHOUT LIMITATION ANY IMPLIED WARRANTIES OF MERCHANTABILITY, FITNESS FOR A PARTICULAR PURPOSE OR NON-INFRINGEMENT OF THIRD PARTY INTELLECTUAL PROPERTY RIGHTS.

These resources are intended for skilled developers designing with TI products. You are solely responsible for (1) selecting the appropriate TI products for your application, (2) designing, validating and testing your application, and (3) ensuring your application meets applicable standards, and any other safety, security, regulatory or other requirements.

These resources are subject to change without notice. TI grants you permission to use these resources only for development of an application that uses the TI products described in the resource. Other reproduction and display of these resources is prohibited. No license is granted to any other TI intellectual property right or to any third party intellectual property right. TI disclaims responsibility for, and you will fully indemnify TI and its representatives against, any claims, damages, costs, losses, and liabilities arising out of your use of these resources.

TI’s products are provided subject to TI’s Terms of Sale or other applicable terms available either on ti.com or provided in conjunction with such TI products. TI’s provision of these resources does not expand or otherwise alter TI’s applicable warranties or warranty disclaimers for TI products.

TI objects to and rejects any additional or different terms you may have proposed.

Mailing Address: Texas Instruments, Post Office Box 655303, Dallas, Texas 75265
Copyright © 2025, Texas Instruments Incorporated