SN74AHC14Q-Q1 Automotive Hex Schmitt-Trigger Inverter

1 Features

- Qualified for automotive applications
- EPIC™ (Enhanced-Performance Implanted CMOS) process
- Operating range of 2V to 5.5V V_{CC}
- Latch-up performance exceeds 250mA per JESD 17
- ESD protection exceeds 2000V per MIL-STD-883, Method 3015

2 Applications

- Synchronize inverted clock inputs
- Debounce a switch
- Invert a digital signal

3 Description

The SN74AHC14Q contains six independent inverters. This device performs the Boolean function $Y = \overline{A}$.

Package Information

PART NUMBER	PACKAGE(1)	PACKAGE SIZE(2)	BODY SIZE (NOM)(3)
SN74AHC14Q-Q1	D (SOIC, 14)	8.65mm × 6mm	8.65mm × 3.9mm
	PW (TSSOP, 14)	5mm × 4.4mm	5mm × 4.4mm
	BQA (WQFN, 14)	3mm × 2.5mm	3mm × 2.5mm

(1) For more information, see Section 11.
(2) The package size (length × width) is a nominal value and includes pins, where applicable
(3) The body size (length × width) is a nominal value and does not include pins.

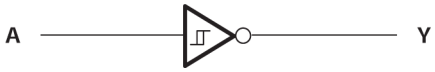

Logic Diagram (Positive Logic)

An IMPORTANT NOTICE at the end of this data sheet addresses availability, warranty, changes, use in safety-critical applications, intellectual property matters and other important disclaimers. PRODUCTION DATA.

Table of Contents

1 Features....1
2 Applications....1
3 Description....1
4 Pin Configuration and Functions....3
5 Specifications....4
5.1 Absolute Maximum Ratings....4
5.2 ESD Ratings....4
5.3 Recommended Operating Conditions....4
5.4 Thermal Information....4
5.5 Electrical Characteristics....5
5.6 Switching Characteristics, V_{CC} = 3.3 V ± 0.3 V....5
5.7 Switching Characteristics, V_{CC} = 5 V ± 0.5 V....5
5.8 Noise Characteristics....6
5.9 Operating Characteristics....6
6 Parameter Measurement Information....7
7 Detailed Description....8
7.1 Overview....8
7.2 Functional Block Diagram....8
7.3 Device Functional Modes....8
8 Application and Implementation....9
8.1 Application Information....9
8.2 Typical Application....9
8.3 Power Supply Recommendations....11
8.4 Layout....11
9 Device and Documentation Support....13
9.1 Documentation Support (Analog)....13
9.2 Receiving Notification of Documentation Updates....13
9.3 Support Resources....13
9.4 Trademarks....13
9.5 Electrostatic Discharge Caution....13
9.6 Glossary....13
10 Revision History....13
11 Mechanical, Packaging, and Orderable Information....14

Copyright © 2024 Texas Instruments Incorporated

4 Pin Configuration and Functions

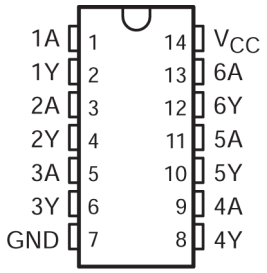

Figure 4-1. D or PW Package, 14-Pin SOIC or TSSOP (Top View)

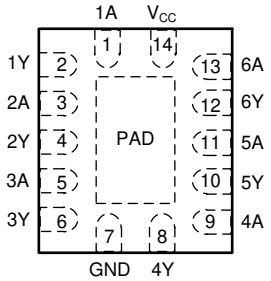

Figure 4-2. BQA Package, 14-Pin WQFN (Top View)

Table 4-1. Pin Functions

PIN		TYPE[(1)]	DESCRIPTION
NAME	NO.		
1A	1	I	Input 1A
1Y	2	O	Output 1Y
2A	3	I	Input 2A
2Y	4	O	Output 2Y
3A	5	I	Input 3A
3Y	6	O	Output 3Y
4Y	8	O	Output 4Y
4A	9	I	Input 4A
5Y	10	O	Output 5Y
5A	11	I	Input 5A
6Y	12	O	Output 6Y
6A	13	I	Input 6A
GND	7	—	Ground Pin
NC	—	—	No Connection
V_{CC}	14	—	Power Pin

(1) Signal Types: I = Input, O = Output, I/O = Input or Output.

Copyright © 2024 Texas Instruments Incorporated

5 Specifications

5.1 Absolute Maximum Ratings

over operating free-air temperature range (unless otherwise noted)[1]

			MIN	MAX	UNIT
V_{CC}	Supply voltage range		−0.5	7	V
V_I [2]	Input voltage range		−0.5	7	V
V_O [2]	Output voltage range		−0.5	V_{CC} + 0.5	V
I_{IK}	Input clamp current	(V_I < 0)		−20	mA
I_{OK}	Output clamp current	(V_O < 0 or V_O > V_{CC})		±20	mA
I_O	Continuous output current	(V_O = 0 to V_{CC})		±25	mA
	Continuous current V_{CC} or GND			±50	mA
T_{stg}	Storage temperature range		−65	150	°C

(1) Stresses beyond those listed under “absolute maximum ratings” may cause permanent damage to the device. These are stress ratings only, and functional operation of the device at these or any other conditions beyond those indicated under “recommended operating conditions” is not implied. Exposure to absolute-maximum-rated conditions for extended periods may affect device reliability.
(2) The input and output voltage ratings may be exceeded if the input and output current ratings are observed.

5.2 ESD Ratings

			VALUE	UNIT
$V_{(ESD)}$	Electrostatic discharge	Human body model (HBM), per AEC Q100-002[1]	±2000	V

(1) AEC Q100-002 indicates that HBM stressing must be in accordance with the ANSI/ESDA/JEDEC JS-001 specification.

5.3 Recommended Operating Conditions

over recommended operating free-air temperature range (unless otherwise noted)[1])

			MIN	MAX	UNIT
V_{CC}	Supply voltage		2	5.5	V
V_I	Input voltage		0	5.5	V
V_O	Output voltage		0	V_{CC}	V
I_{OH}	High-level output current	V_{CC} = 2 V		−50	mA
		V_{CC} = 3.3 V ± 0.3 V		−4	mA
		V_{CC} = 5 V ± 0.5 V		−8	
I_{OL}	Low-level output current	V_{CC} = 2 V		50	mA
		V_{CC} = 3.3 V ± 0.3 V		4	mA
		V_{CC} = 5 V ± 0.5 V		8	
T_A	Operating free-air temperature		−40	125	°C

(1) All unused inputs of the device must be held at V_{CC} or GND to ensure proper device operation. Refer to the TI application report, *Implications of Slow or Floating CMOS Inputs*, literature number SCBA004.

5.4 Thermal Information

THERMAL METRIC[1]		SN74AHC14Q-Q1			UNIT
		D	PW	BQA	
		14 PINS	14 PINS	14 PINS	
$R_{\theta JA}$	Junction-to-ambient thermal resistance	124.6	147.7	88.3	°C/W

(1) For more information about traditional and new thermal metrics, see the *IC Package Thermal Metrics* application report (SPRA953).

Copyright © 2024 Texas Instruments Incorporated

5.5 Electrical Characteristics

over recommended operating free-air temperature range (unless otherwise noted)

PARAMETER	TEST CONDITIONS	V_{CC}	T_A = 25°C			MIN	MAX	UNIT
			MIN	TYP	MAX			
V_{T+} Positive-going input threshold voltage		3 V	1.2		2.2	1.2	2.2	V
		4.5 V	1.75		3.15	1.75	3.15	
		5.5 V	2.15		3.85	2.15	3.85	
V_{T-} Negative-going input threshold voltage		3 V	0.9		1.9	0.9	1.9	V
		4.5 V	1.35		2.75	1.35	2.75	
		5.5 V	1.65		3.35	1.65	3.35	
ΔV_T Hysteresis (V_{T+} − V_{T-})		3 V	0.3		1.2	0.3	1.2	V
		4.5 V	0.4		1.4	0.4	1.4	
		5.5 V	0.5		1.6	0.5	1.6	
V_{OH}	I_{OH} = -50 µA	2 V	1.9	2		1.9		V
		3 V	2.9	3		2.9		
		4.5 V	4.4	4.5		4.4		
	I_{OH} = -4 mA	3 V	2.58			2.48		
	I_{OH} = -8 mA	4.5 V	3.94			3.8		
V_{OL}	I_{OL} = 50 µA	2 V			0.1		0.1	V
		3 V			0.1		0.1	
		4.5 V			0.1		0.1	
	I_{OL} = 4 mA	3 V			0.36		0.5	
	I_{OL} = 8 mA	4.5 V			0.36		0.5	
I_I	V_I = 5.5 V or GND	0 V to 5.5 V			±0.1		±1	µA
I_{CC}	V_I = V_{CC} or GND,	I_O = 05.5 V			2		20	µA
C_i	V_I = V_{CC} or GND	5 V		2	10			PF

5.6 Switching Characteristics, V_{CC} = 3.3 V ± 0.3 V

over recommended operating free-air temperature range, V_{CC} = 3.3 V ± 0.3 V (unless otherwise noted) (see Load Circuit and Voltage Waveforms)

PARAMETER	FROM (INPUT)	TO (OUTPUT)	LOAD CAPACITANCE	T_A = 25°C			MIN	MAX	UNIT
				MIN	TYP	MAX			
t_{PLH}	A	Y	C_L = 15 pF		8.3	12.8	1	15	ns
t_{PHL}					8.3	12.8	1	15	
t_{PLH}	A	Y	C_L = 50 pF		10.8	16.3	1	18.5	ns
t_{PHL}					10.8	16.3	1	18.5	

5.7 Switching Characteristics, V_{CC} = 5 V ± 0.5 V

over recommended operating free-air temperature range, V_{CC} = 5 V ± 0.5 V (unless otherwise noted) (see Load Circuit and Voltage Waveforms)

PARAMETER	FROM (INPUT)	TO (OUTPUT)	LOAD CAPACITANCE	T_A = 25°C			MIN	MAX	UNIT
				MIN	TYP	MAX			
t_{PLH}	A	Y	C_L = 15 pF		5.5	8.6	1	10	ns
t_{PHL}					5.5	8.6	1	10	
t_{PLH}	A	Y	C_L = 50 pF		7	10.6	1	12	ns
t_{PHL}					7	10.6	1	12	

Copyright © 2024 Texas Instruments Incorporated

5.8 Noise Characteristics

V_{CC} = 5 V, C_L = 50 pF, T_A = 25°C [(1)]

PARAMETER		MIN	TYP	MAX	UNIT
$V_{OL}(P)$	Quiet output, maximum dynamic V_{OL}		0.8		V
$V_{OL}(V)$	Quiet output, minimum dynamic V_{OL}		−0.4		V
$V_{OH}(V)$	Quiet output, minimum dynamic V_{OH}		4.6		V
$V_{IH}(D)$	High-level dynamic input voltage	3.5			V
$V_{IL}(D)$	Low-level dynamic input voltage			1.5	V

(1) Characteristics are for surface-mount packages only.

5.9 Operating Characteristics

V_{CC} = 5 V, T_A = 25°C

PARAMETER		TEST CONDITIONS		TYP	UNIT
C_{pd}	Power dissipation capacitance	No load,	f = 1 MHz	9	pF

Copyright © 2024 Texas Instruments Incorporated

6 Parameter Measurement Information

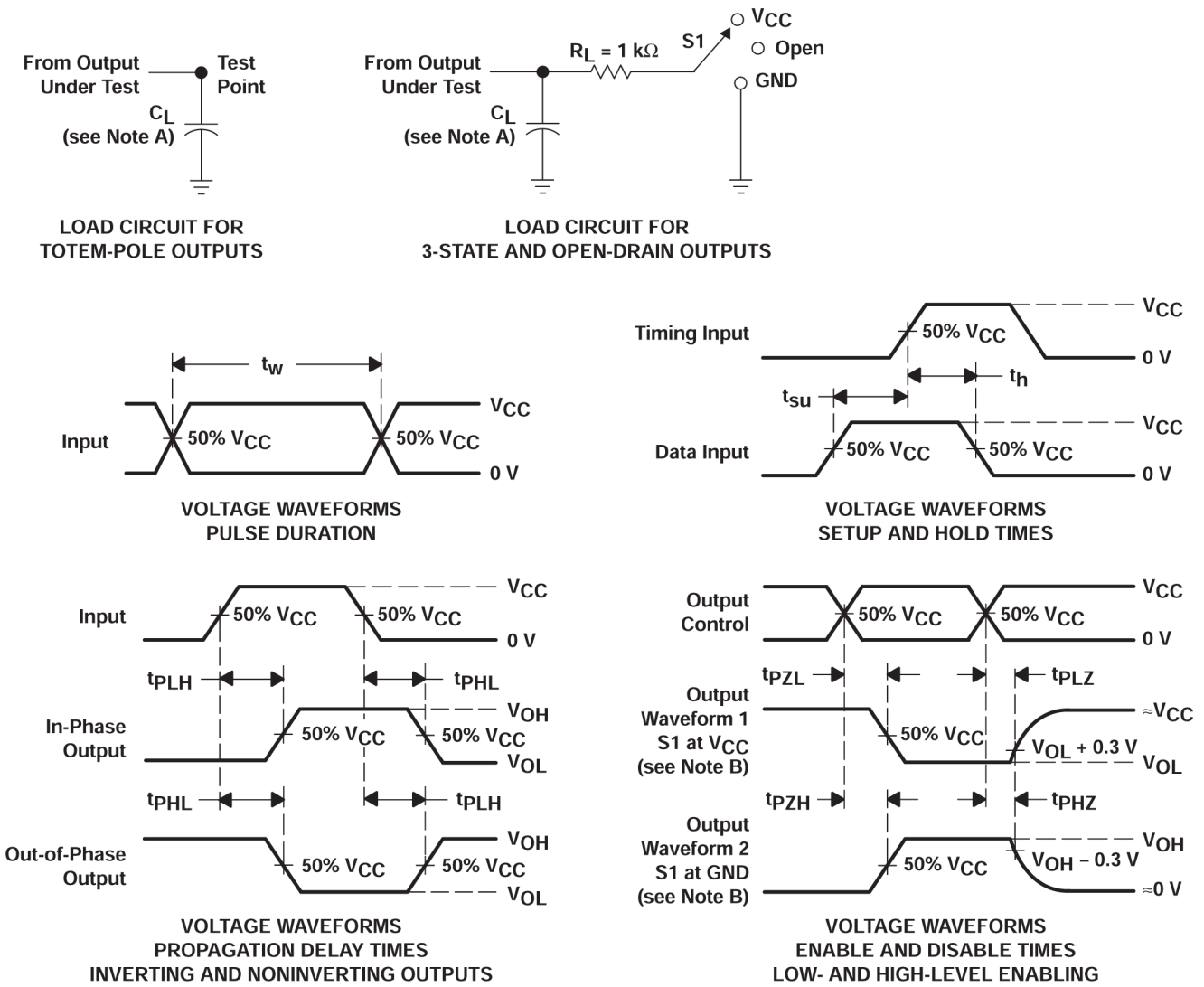

A. C_L includes probe and jig capacitance.

B. Waveform 1 is for an output with internal conditions such that the output is low except when disabled by the output control. Waveform 2 is for an output with internal conditions such that the output is high except when disabled by the output control.

C. All input pulses are supplied by generators having the following characteristics: PRR ≤ 1 MHz, Z_O = 50 Ω, t_r ≤ 3 ns, t_f ≤ 3 ns.

D. The outputs are measured one at a time with one input transition per measurement.

Figure 6-1. Load Circuit and Voltage Waveforms

TEST	S1
t_{PLH}/t_{PHL}	Open
t_{PLZ}/t_{PZL}	V_{CC}
t_{PHZ}/t_{PZH}	GND
Open Drain	V_{CC}

7 Detailed Description

7.1 Overview

Each circuit functions as an independent inverter, but because of the Schmitt action, the inverters have different input threshold levels for positive-going (V_{T+}) and negative-going (V_{T-}) signals.

7.2 Functional Block Diagram

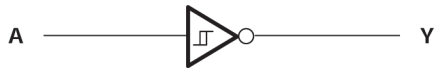

Figure 7-1. Logic Diagram (Positive Logic)

This symbol is in accordance with ANSI/IEEE Std 91-1984 and IEC Publication 617-12.

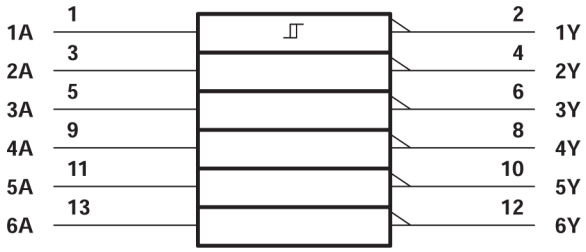

7.3 Device Functional Modes

Table 7-1. Function Table (Each Inverter)

INPUT	OUTPUT
A	Y
H	L
L	H

Copyright © 2024 Texas Instruments Incorporated

8 Application and Implementation

Note

Information in the following applications sections is not part of the TI component specification, and TI does not warrant its accuracy or completeness. TI's customers are responsible for determining suitability of components for their purposes, as well as validating and testing their design implementation to confirm system functionality.

8.1 Application Information

The SN74AHC14Q-Q1 can be used to add an additional stage to a counter with an external flip-flop. Because counters use a negative edge trigger, the flip-flop's clock input must be inverted to provide this function. Having Schmitt-trigger inputs is important in this application to eliminate any noise issues that could impact the counting function which could lead to incorrect frequency division. This function only requires one of the six available inverters in the SN74AHC14Q-Q1 device, so the remaining channels can be used for other applications needing an inverted signal or improved signal integrity. Unused inputs must be terminated at V_{CC} or GND. Unused outputs can be left floating.

8.2 Typical Application

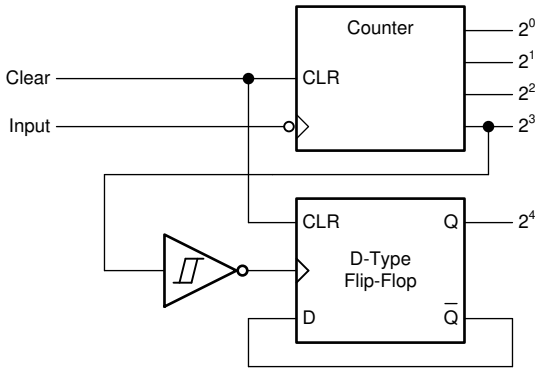

Figure 8-1. Typical Application Block Diagram

8.2.1 Design Requirements

8.2.1.1 Power Considerations

Ensure the desired supply voltage is within the range specified in the *Recommended Operating Conditions*. The supply voltage sets the electrical characteristics of the device as described in the *Electrical Characteristics* section.

The positive voltage supply must be capable of sourcing current equal to the total current to be sourced by all outputs of the SN74AHC14Q-Q1 plus the maximum static supply current, I_{CC}, listed in the *Electrical Characteristics*, and any transient current required for switching. The logic device can only source as much current that is provided by the positive supply source. Be sure to not exceed the maximum total current through V_{CC} listed in the *Absolute Maximum Ratings*.

The ground must be capable of sinking current equal to the total current to be sunk by all outputs of the SN74AHC14Q-Q1 plus the maximum supply current, I_{CC}, listed in the *Electrical Characteristics*, and any transient current required for switching. The logic device can only sink as much current that can be sunk into its ground connection. Be sure to not exceed the maximum total current through GND listed in the *Absolute Maximum Ratings*.

The SN74AHC14Q-Q1 can drive a load with a total capacitance less than or equal to 50 pF while still meeting all of the data sheet specifications. Larger capacitive loads can be applied; however, it is not recommended to exceed 50 pF.

Copyright © 2024 Texas Instruments Incorporated

The SN74AHC14Q-Q1 can drive a load with total resistance described by $R_L \geq V_O / I_O$, with the output voltage and current defined in the *Electrical Characteristics* table with V_{OH} and V_{OL}. When outputting in the HIGH state, the output voltage in the equation is defined as the difference between the measured output voltage and the supply voltage at the V_{CC} pin.

Total power consumption can be calculated using the information provided in the *CMOS Power Consumption and Cpd Calculation* application note.

Thermal increase can be calculated using the information provided in the *Thermal Characteristics of Standard Linear and Logic (SLL) Packages and Devices* application note.

CAUTION

The maximum junction temperature, $T_{J(max)}$ listed in the *Absolute Maximum Ratings*, is an additional limitation to prevent damage to the device. Do not violate any values listed in the *Absolute Maximum Ratings*. These limits are provided to prevent damage to the device.

8.2.1.2 Input Considerations

Input signals must cross $V_{t-(min)}$ to be considered a logic LOW, and $V_{t+(max)}$ to be considered a logic HIGH. Do not exceed the maximum input voltage range found in the *Absolute Maximum Ratings*.

Unused inputs must be terminated to either V_{CC} or ground. The unused inputs can be directly terminated if the input is completely unused, or they can be connected with a pull-up or pull-down resistor if the input will be used sometimes, but not always. A pull-up resistor is used for a default state of HIGH, and a pull-down resistor is used for a default state of LOW. The drive current of the controller, leakage current into the SN74AHC14Q-Q1 (as specified in the *Electrical Characteristics*), and the desired input transition rate limits the resistor size. A 10-kΩ resistor value is often used due to these factors.

The SN74AHC14Q-Q1 has no input signal transition rate requirements because it has Schmitt-trigger inputs.

Another benefit to having Schmitt-trigger inputs is the ability to reject noise. Noise with a large enough amplitude can still cause issues. To know how much noise is too much, please refer to the $\Delta V_{T(min)}$ in the *Electrical Characteristics*. This hysteresis value will provide the peak-to-peak limit.

Unlike what happens with standard CMOS inputs, Schmitt-trigger inputs can be held at any valid value without causing huge increases in power consumption. The typical additional current caused by holding an input at a value other than V_{CC} or ground is plotted in the *Typical Characteristics*.

Refer to the *Feature Description* section for additional information regarding the inputs for this device.

8.2.1.3 Output Considerations

The positive supply voltage is used to produce the output HIGH voltage. Drawing current from the output will decrease the output voltage as specified by the V_{OH} specification in the *Electrical Characteristics*. The ground voltage is used to produce the output LOW voltage. Sinking current into the output will increase the output voltage as specified by the V_{OL} specification in the *Electrical Characteristics*.

Push-pull outputs that could be in opposite states, even for a very short time period, should never be connected directly together. This can cause excessive current and damage to the device.

Two channels within the same device with the same input signals can be connected in parallel for additional output drive strength.

Unused outputs can be left floating. Do not connect outputs directly to V_{CC} or ground.

Refer to the *Feature Description* section for additional information regarding the outputs for this device.

Copyright © 2024 Texas Instruments Incorporated

8.2.2 Detailed Design Procedure

1. Add a decoupling capacitor from V_{CC} to GND. The capacitor needs to be placed physically close to the device and electrically close to both the V_{CC} and GND pins. An example layout is shown in the *Layout* section.
2. Ensure the capacitive load at the output is ≤ 50 pF. This is not a hard limit; it will, however, ensure optimal performance. This can be accomplished by providing short, appropriately sized traces from the SN74AHC14Q-Q1 to one or more of the receiving devices.
3. Ensure the resistive load at the output is larger than (V_{CC} / $I_{O(max)}$) Ω. This will ensure that the maximum output current from the *Absolute Maximum Ratings* is not violated. Most CMOS inputs have a resistive load measured in MΩ; much larger than the minimum calculated previously.
4. Thermal issues are rarely a concern for logic gates; the power consumption and thermal increase, however, can be calculated using the steps provided in the application report, *CMOS Power Consumption and Cpd Calculation*.

8.2.3 Application Curves

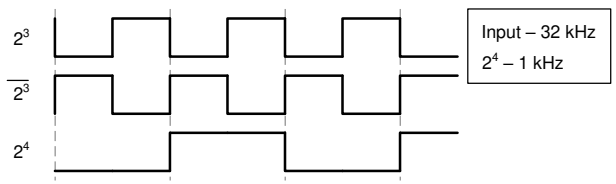

Figure 8-2. Application Timing Diagram

8.3 Power Supply Recommendations

The power supply can be any voltage between the minimum and maximum supply voltage rating located in the *Recommended Operating Conditions*. Each V_{CC} terminal should have a good bypass capacitor to prevent power disturbance. A 0.1-µF capacitor is recommended for this device. It is acceptable to parallel multiple bypass capacitors to reject different frequencies of noise. The 0.1-µF and 1-µF capacitors are commonly used in parallel. The bypass capacitor should be installed as close to the power terminal as possible for best results, as shown in the following layout example.

8.4 Layout

8.4.1 Layout Guidelines

When using multiple-input and multiple-channel logic devices, inputs must never be left floating. In many cases, functions or parts of functions of digital logic devices are unused (for example, when only two inputs of a triple-input AND gate are used or only 3 of the 4 buffer gates are used). Such unused input pins must not be left unconnected because the undefined voltages at the outside connections result in undefined operational states. All unused inputs of digital logic devices must be connected to a logic high or logic low voltage, as defined by the input voltage specifications, to prevent them from floating. The logic level that must be applied to any particular unused input depends on the function of the device. Generally, the inputs are tied to GND or V_{CC}, whichever makes more sense for the logic function or is more convenient.

Copyright © 2024 Texas Instruments Incorporated

8.4.2 Layout Example

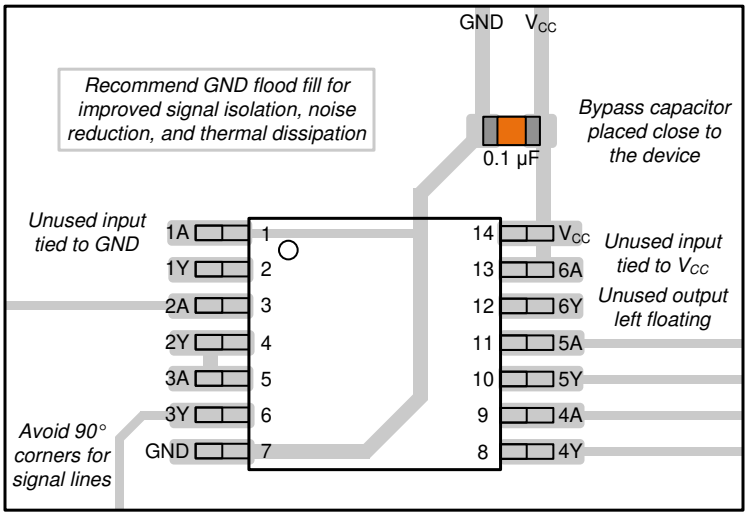

Figure 8-3. Example Layout for the SN74AHC14Q-Q1

Copyright © 2024 Texas Instruments Incorporated

9 Device and Documentation Support

9.1 Documentation Support (Analog)

9.1.1 Related Documentation

For related documentation, see the following:

- Texas Instruments, *CMOS Power Consumption and Cpd Calculation* application note
- Texas Instruments, *Designing With Logic* application note
- Texas Instruments, *Thermal Characteristics of Standard Linear and Logic (SLL) Packages and Devices* application note
- Texas Instruments, *Implications of Slow or Floating CMOS Inputs* application note

9.2 Receiving Notification of Documentation Updates

To receive notification of documentation updates, navigate to the device product folder on ti.com. Click on *Notifications* to register and receive a weekly digest of any product information that has changed. For change details, review the revision history included in any revised document.

9.3 Support Resources

TI E2E™ support forums are an engineer's go-to source for fast, verified answers and design help — straight from the experts. Search existing answers or ask your own question to get the quick design help you need.

Linked content is provided "AS IS" by the respective contributors. They do not constitute TI specifications and do not necessarily reflect TI's views; see TI's Terms of Use.

9.4 Trademarks

EPIC™ is a trademark of Texas Instruments.
TI E2E™ is a trademark of Texas Instruments.
All trademarks are the property of their respective owners.

9.5 Electrostatic Discharge Caution

This integrated circuit can be damaged by ESD. Texas Instruments recommends that all integrated circuits be handled with appropriate precautions. Failure to observe proper handling and installation procedures can cause damage.

ESD damage can range from subtle performance degradation to complete device failure. Precision integrated circuits may be more susceptible to damage because very small parametric changes could cause the device not to meet its published specifications.

9.6 Glossary

TI Glossary	This glossary lists and explains terms, acronyms, and definitions.

10 Revision History

NOTE: Page numbers for previous revisions may differ from page numbers in the current version.

Changes from Revision D (October 2023) to Revision E (February 2024)	Page
• Updated RθJA value: D = 86 to 124.6, all values in °C/W	4

Changes from Revision C (June 2023) to Revision D (October 2023)	Page
• Updated RθJA values: PW = 113 to 147.7, all values in °C/W	4

11 Mechanical, Packaging, and Orderable Information

The following pages include mechanical, packaging, and orderable information. This information is the most current data available for the designated devices. This data is subject to change without notice and revision of this document. For browser-based versions of this data sheet, refer to the left-hand navigation.

Copyright © 2024 Texas Instruments Incorporated

PACKAGING INFORMATION

Orderable part number	Status (1)	Material type (2)	Package | Pins	Package qty | Carrier	RoHS (3)	Lead finish/ Ball material (4)	MSL rating/ Peak reflow (5)	Op temp (°C)	Part marking (6)
SN74AHC14QDRQ1	Active	Production	SOIC (D) | 14	2500 | LARGE T&R	Yes	NIPDAU	Level-1-260C-UNLIM	-40 to 125	AHC14Q
SN74AHC14QDRQ1.A	Active	Production	SOIC (D) | 14	2500 | LARGE T&R	Yes	NIPDAU	Level-1-260C-UNLIM	-40 to 125	AHC14Q
SN74AHC14QPWRG4Q1	Active	Production	TSSOP (PW) | 14	2000 | LARGE T&R	Yes	NIPDAU	Level-1-260C-UNLIM	-40 to 125	HA14Q
SN74AHC14QPWRG4Q1.A	Active	Production	TSSOP (PW) | 14	2000 | LARGE T&R	Yes	NIPDAU	Level-1-260C-UNLIM	-40 to 125	HA14Q
SN74AHC14QPWRQ1	Active	Production	TSSOP (PW) | 14	2000 | LARGE T&R	Yes	NIPDAU	Level-1-260C-UNLIM	-40 to 125	HA14Q
SN74AHC14QPWRQ1.A	Active	Production	TSSOP (PW) | 14	2000 | LARGE T&R	Yes	NIPDAU	Level-1-260C-UNLIM	-40 to 125	HA14Q
SN74AHC14QWBQARQ1	Active	Production	WQFN (BQA) | 14	3000 | LARGE T&R	Yes	NIPDAU	Level-1-260C-UNLIM	-40 to 125	AHC14Q
SN74AHC14QWBQARQ1.A	Active	Production	WQFN (BQA) | 14	3000 | LARGE T&R	Yes	NIPDAU	Level-1-260C-UNLIM	-40 to 125	AHC14Q

(1) **Status:** For more details on status, see our product life cycle.

(2) **Material type:** When designated, preproduction parts are prototypes/experimental devices, and are not yet approved or released for full production. Testing and final process, including without limitation quality assurance, reliability performance testing, and/or process qualification, may not yet be complete, and this item is subject to further changes or possible discontinuation. If available for ordering, purchases will be subject to an additional waiver at checkout, and are intended for early internal evaluation purposes only. These items are sold without warranties of any kind.

(3) **RoHS values:** Yes, No, RoHS Exempt. See the TI RoHS Statement for additional information and value definition.

(4) **Lead finish/Ball material:** Parts may have multiple material finish options. Finish options are separated by a vertical ruled line. Lead finish/Ball material values may wrap to two lines if the finish value exceeds the maximum column width.

(5) **MSL rating/Peak reflow:** The moisture sensitivity level ratings and peak solder (reflow) temperatures. In the event that a part has multiple moisture sensitivity ratings, only the lowest level per JEDEC standards is shown. Refer to the shipping label for the actual reflow temperature that will be used to mount the part to the printed circuit board.

(6) **Part marking:** There may be an additional marking, which relates to the logo, the lot trace code information, or the environmental category of the part.

Multiple part markings will be inside parentheses. Only one part marking contained in parentheses and separated by a "~" will appear on a part. If a line is indented then it is a continuation of the previous line and the two combined represent the entire part marking for that device.

Important Information and Disclaimer: The information provided on this page represents TI's knowledge and belief as of the date that it is provided. TI bases its knowledge and belief on information provided by third parties, and makes no representation or warranty as to the accuracy of such information. Efforts are underway to better integrate information from third parties. TI has taken and continues to take reasonable steps to provide representative and accurate information but may not have conducted destructive testing or chemical analysis on incoming materials and chemicals. TI and TI suppliers consider certain information to be proprietary, and thus CAS numbers and other limited information may not be available for release.

In no event shall TI's liability arising out of such information exceed the total purchase price of the TI part(s) at issue in this document sold by TI to Customer on an annual basis.

TAPE AND REEL INFORMATION

REEL DIMENSIONS

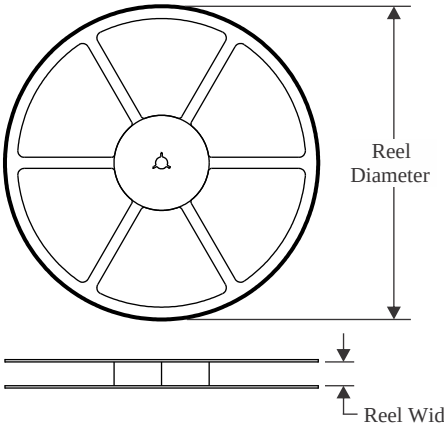

TAPE DIMENSIONS

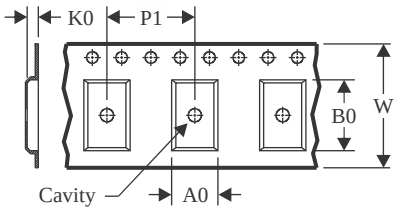

A0	Dimension designed to accommodate the component width
B0	Dimension designed to accommodate the component length
K0	Dimension designed to accommodate the component thickness
W	Overall width of the carrier tape
P1	Pitch between successive cavity centers

QUADRANT ASSIGNMENTS FOR PIN 1 ORIENTATION IN TAPE

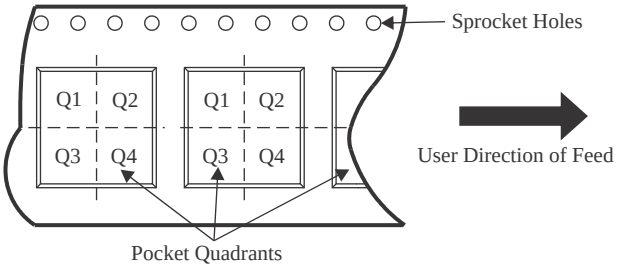

*All dimensions are nominal

Device	Package Type	Package Drawing	Pins	SPQ	Reel Diameter (mm)	Reel Width W1 (mm)	A0 (mm)	B0 (mm)	K0 (mm)	P1 (mm)	W (mm)	Pin1 Quadrant
SN74AHC14QDRQ1	SOIC	D	14	2500	330.0	16.4	6.5	9.0	2.1	8.0	16.0	Q1
SN74AHC14QPWRG4Q1	TSSOP	PW	14	2000	330.0	12.4	6.9	5.6	1.6	8.0	12.0	Q1
SN74AHC14QPWRG4Q1	TSSOP	PW	14	2000	330.0	12.4	6.9	5.6	1.6	8.0	12.0	Q1
SN74AHC14QPWRQ1	TSSOP	PW	14	2000	330.0	12.4	6.9	5.6	1.6	8.0	12.0	Q1
SN74AHC14QWBQARQ1	WQFN	BQA	14	3000	180.0	12.4	2.8	3.3	1.1	4.0	12.0	Q1

TAPE AND REEL BOX DIMENSIONS

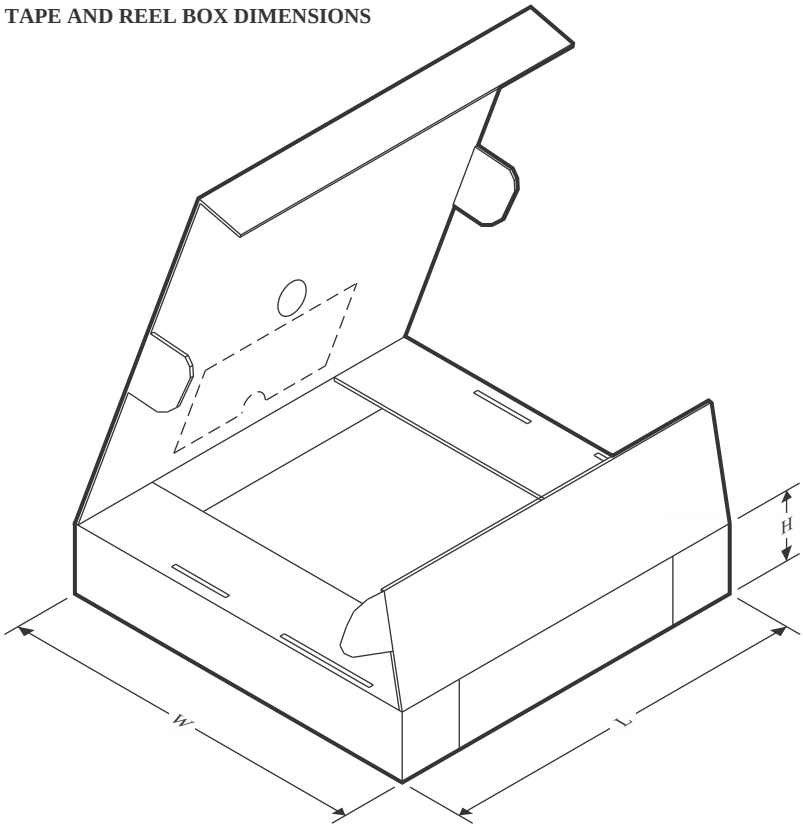

*All dimensions are nominal

Device	Package Type	Package Drawing	Pins	SPQ	Length (mm)	Width (mm)	Height (mm)
SN74AHC14QDRQ1	SOIC	D	14	2500	353.0	353.0	32.0
SN74AHC14QPWRG4Q1	TSSOP	PW	14	2000	356.0	356.0	35.0
SN74AHC14QPWRG4Q1	TSSOP	PW	14	2000	353.0	353.0	32.0
SN74AHC14QPWRQ1	TSSOP	PW	14	2000	356.0	356.0	35.0
SN74AHC14QWBQARQ1	WQFN	BQA	14	3000	210.0	185.0	35.0

PW0014A

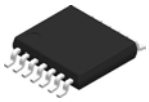

PACKAGE OUTLINE

TSSOP - 1.2 mm max height

SMALL OUTLINE PACKAGE

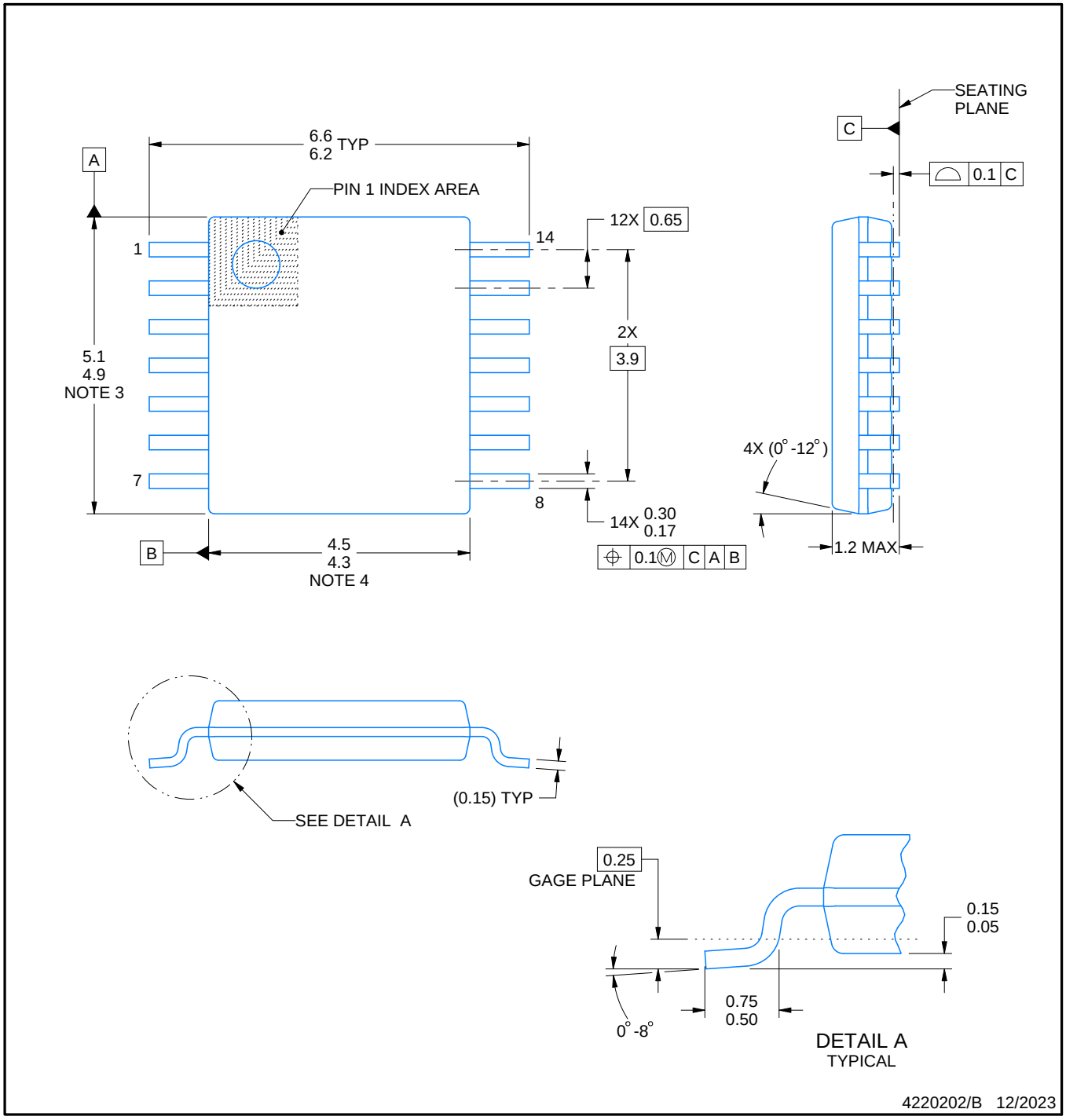

NOTES:

1. All linear dimensions are in millimeters. Any dimensions in parenthesis are for reference only. Dimensioning and tolerancing per ASME Y14.5M.
2. This drawing is subject to change without notice.
3. This dimension does not include mold flash, protrusions, or gate burrs. Mold flash, protrusions, or gate burrs shall not exceed 0.15 mm per side.
4. This dimension does not include interlead flash. Interlead flash shall not exceed 0.25 mm per side.
5. Reference JEDEC registration MO-153.

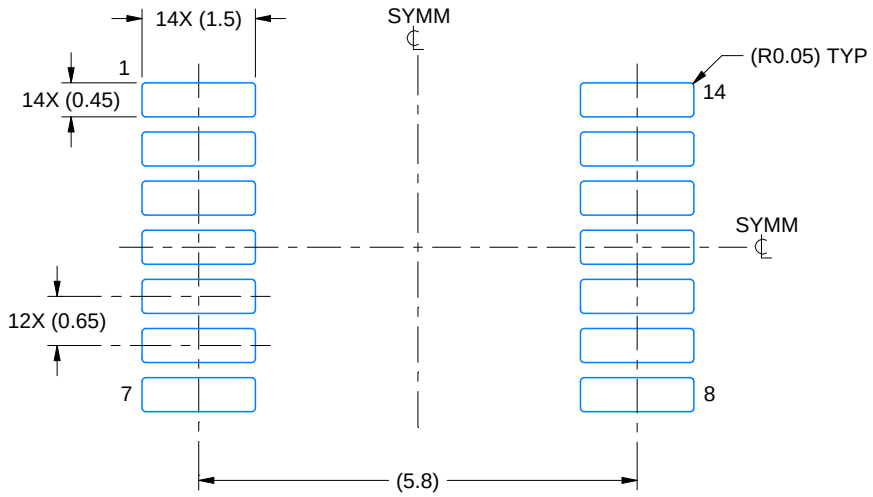

LAND PATTERN EXAMPLE
EXPOSED METAL SHOWN
SCALE: 10X

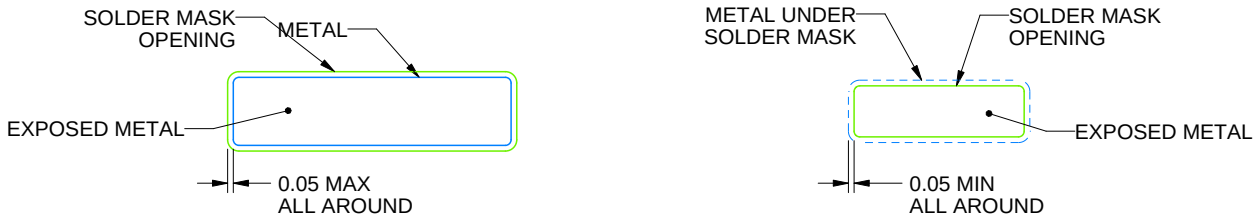

NON-SOLDER MASK DEFINED (PREFERRED)

SOLDER MASK DEFINED

SOLDER MASK DETAILS

4220202/B 12/2023

NOTES: (continued)

6. Publication IPC-7351 may have alternate designs.
7. Solder mask tolerances between and around signal pads can vary based on board fabrication site.

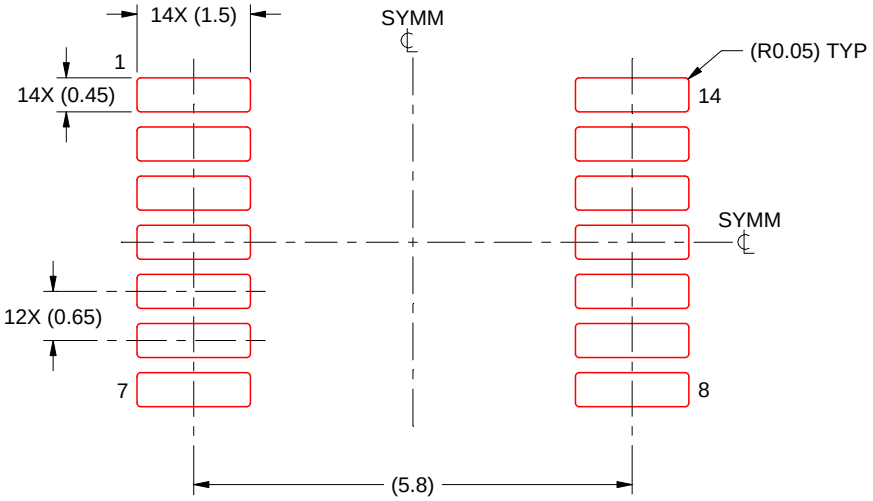

SOLDER PASTE EXAMPLE
BASED ON 0.125 mm THICK STENCIL
SCALE: 10X

4220202/B 12/2023

NOTES: (continued)

8. Laser cutting apertures with trapezoidal walls and rounded corners may offer better paste release. IPC-7525 may have alternate design recommendations.
9. Board assembly site may have different recommendations for stencil design.

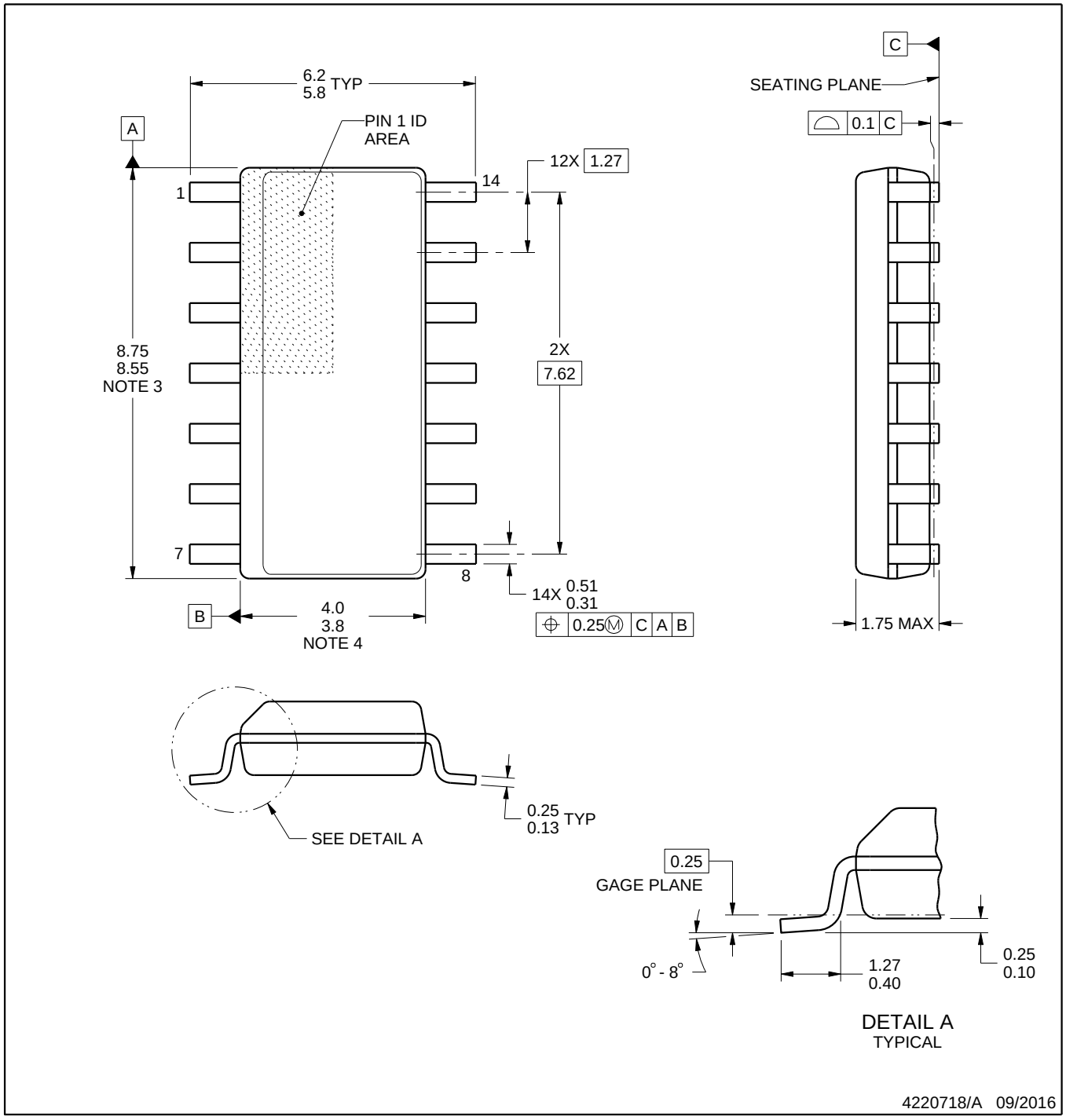

NOTES:

1. All linear dimensions are in millimeters. Dimensions in parenthesis are for reference only. Dimensioning and tolerancing per ASME Y14.5M.
2. This drawing is subject to change without notice.
3. This dimension does not include mold flash, protrusions, or gate burrs. Mold flash, protrusions, or gate burrs shall not exceed 0.15 mm, per side.
4. This dimension does not include interlead flash. Interlead flash shall not exceed 0.43 mm, per side.
5. Reference JEDEC registration MS-012, variation AB.

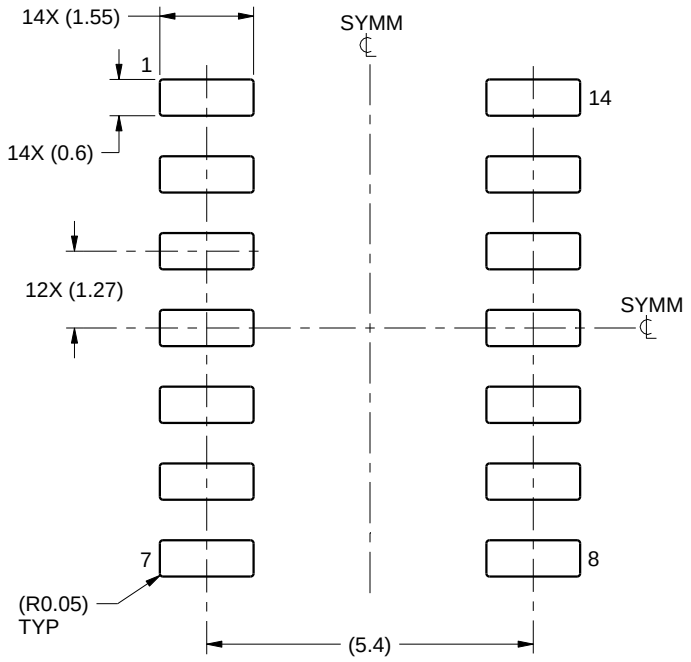

LAND PATTERN EXAMPLE
SCALE:8X

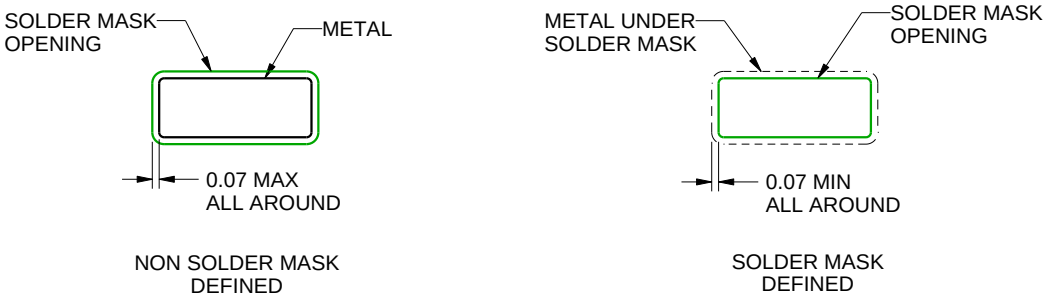

SOLDER MASK DETAILS

4220718/A 09/2016

NOTES: (continued)

6. Publication IPC-7351 may have alternate designs.
7. Solder mask tolerances between and around signal pads can vary based on board fabrication site.

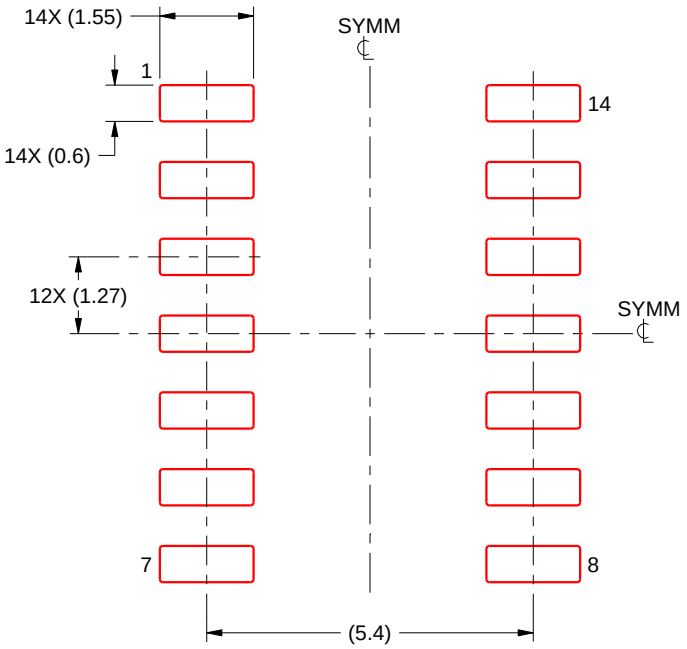

SOLDER PASTE EXAMPLE
BASED ON 0.125 mm THICK STENCIL
SCALE:8X

4220718/A 09/2016

NOTES: (continued)

8. Laser cutting apertures with trapezoidal walls and rounded corners may offer better paste release. IPC-7525 may have alternate design recommendations.
9. Board assembly site may have different recommendations for stencil design.

GENERIC PACKAGE VIEW

BQA 14

WQFN - 0.8 mm max height

2.5 x 3, 0.5 mm pitch

PLASTIC QUAD FLATPACK - NO LEAD

This image is a representation of the package family, actual package may vary.
Refer to the product data sheet for package details.

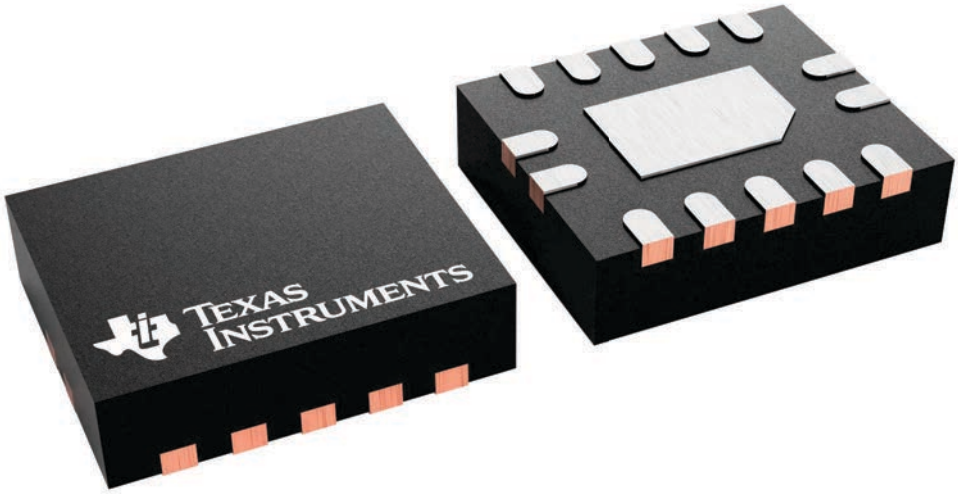

4227145/A

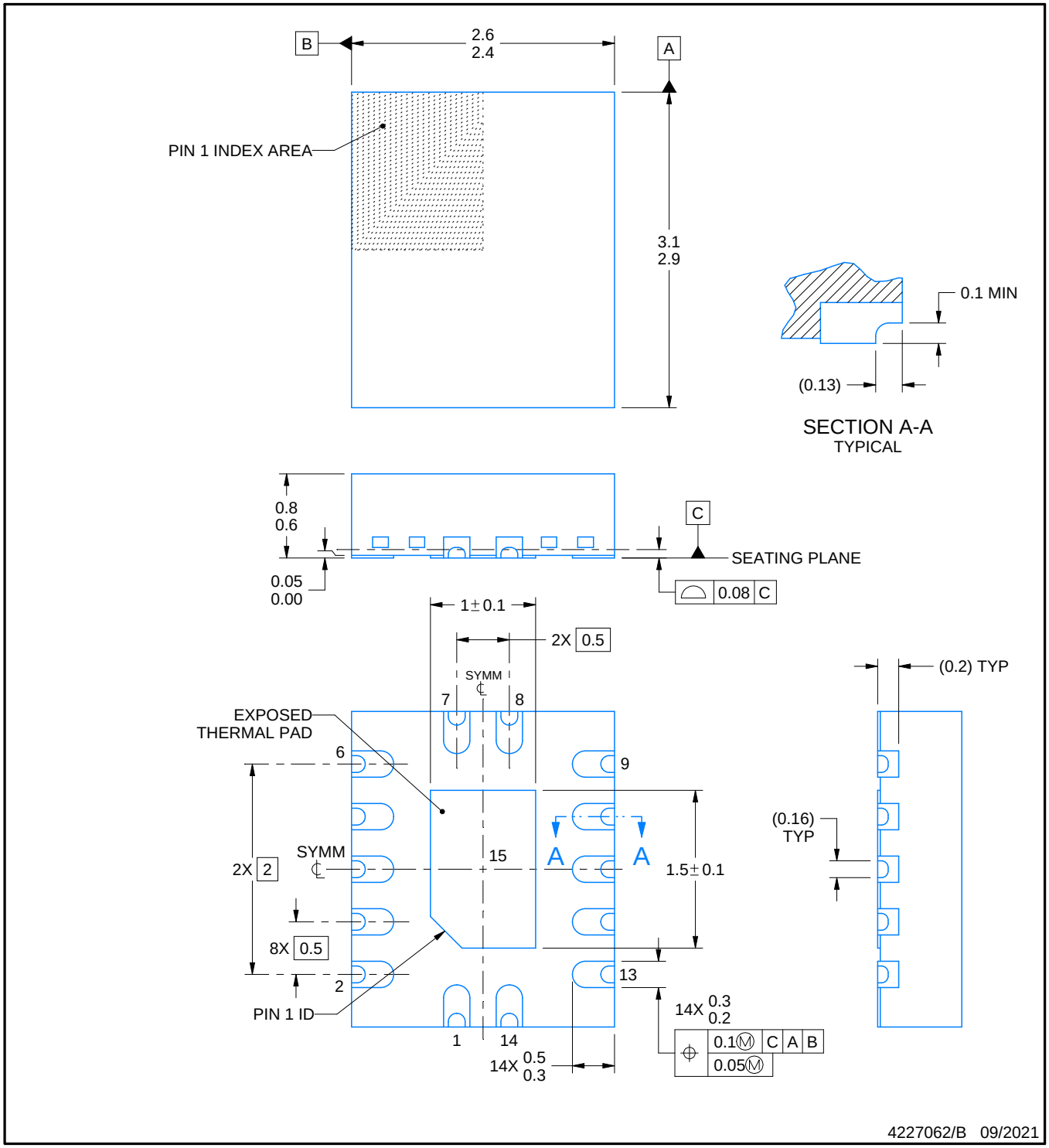

NOTES:

1. All linear dimensions are in millimeters. Any dimensions in parenthesis are for reference only. Dimensioning and tolerancing per ASME Y14.5M.
2. This drawing is subject to change without notice.
3. The package thermal pad must be soldered to the printed circuit board for thermal and mechanical performance.

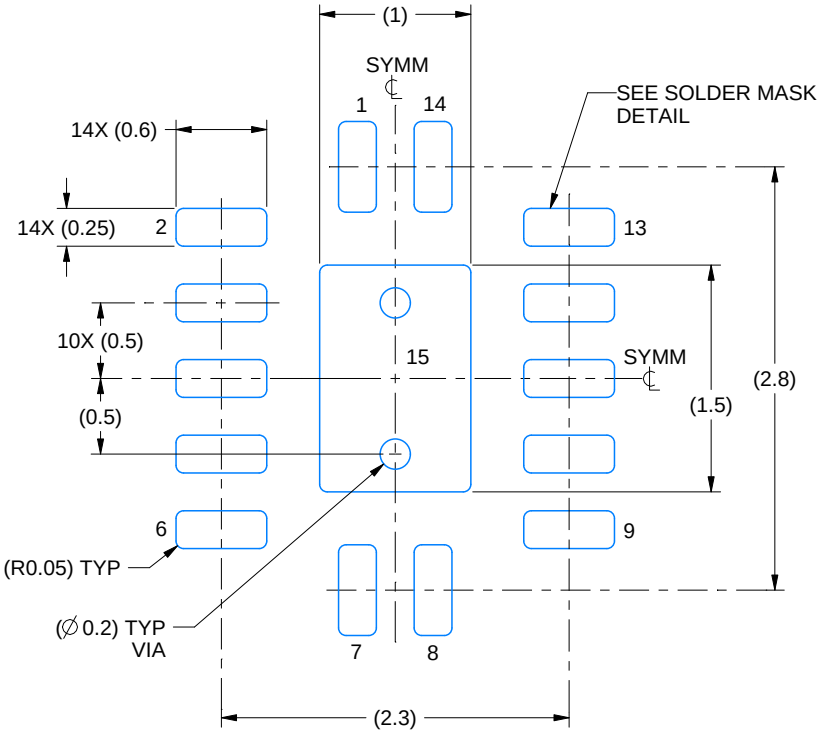

LAND PATTERN EXAMPLE
EXPOSED METAL SHOWN
SCALE: 20X

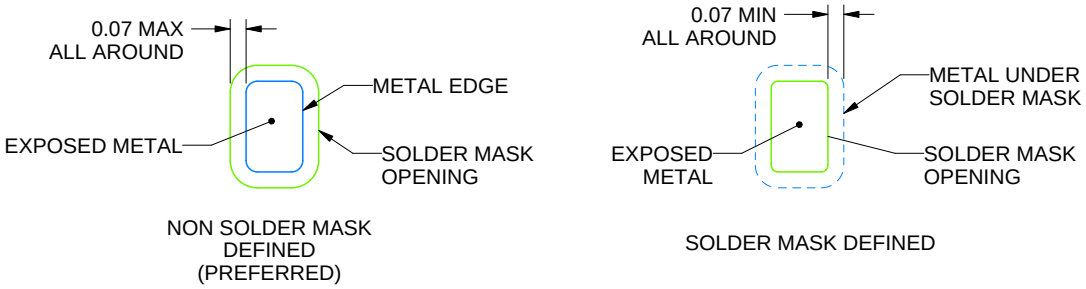

SOLDER MASK DETAILS

4227062/B 09/2021

NOTES: (continued)

4. This package is designed to be soldered to a thermal pad on the board. For more information, see Texas Instruments literature number SLUA271 (www.ti.com/lit/slua271).
5. Vias are optional depending on application, refer to device data sheet. If any vias are implemented, refer to their locations shown on this view. It is recommended that vias under paste be filled, plugged or tented.

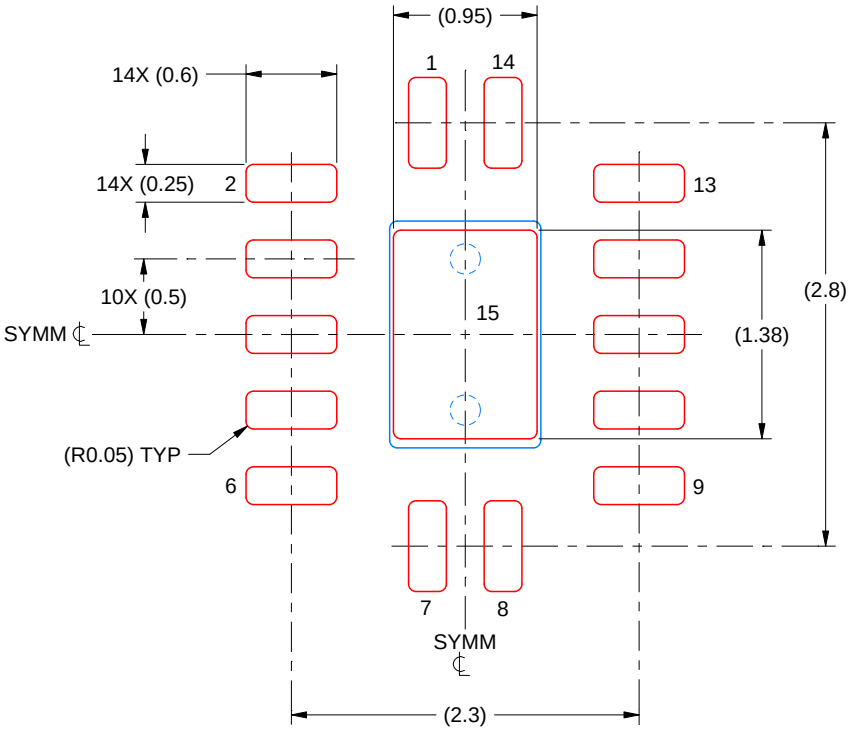

SOLDER PASTE EXAMPLE
BASED ON 0.125 MM THICK STENCIL
SCALE: 20X

EXPOSED PAD 15
87% PRINTED SOLDER COVERAGE BY AREA UNDER PACKAGE

4227062/B 09/2021

NOTES: (continued)

6. Laser cutting apertures with trapezoidal walls and rounded corners may offer better paste release. IPC-7525 may have alternate design recommendations.

IMPORTANT NOTICE AND DISCLAIMER

TI PROVIDES TECHNICAL AND RELIABILITY DATA (INCLUDING DATA SHEETS), DESIGN RESOURCES (INCLUDING REFERENCE DESIGNS), APPLICATION OR OTHER DESIGN ADVICE, WEB TOOLS, SAFETY INFORMATION, AND OTHER RESOURCES “AS IS” AND WITH ALL FAULTS, AND DISCLAIMS ALL WARRANTIES, EXPRESS AND IMPLIED, INCLUDING WITHOUT LIMITATION ANY IMPLIED WARRANTIES OF MERCHANTABILITY, FITNESS FOR A PARTICULAR PURPOSE OR NON-INFRINGEMENT OF THIRD PARTY INTELLECTUAL PROPERTY RIGHTS.

These resources are intended for skilled developers designing with TI products. You are solely responsible for (1) selecting the appropriate TI products for your application, (2) designing, validating and testing your application, and (3) ensuring your application meets applicable standards, and any other safety, security, regulatory or other requirements.

These resources are subject to change without notice. TI grants you permission to use these resources only for development of an application that uses the TI products described in the resource. Other reproduction and display of these resources is prohibited. No license is granted to any other TI intellectual property right or to any third party intellectual property right. TI disclaims responsibility for, and you will fully indemnify TI and its representatives against, any claims, damages, costs, losses, and liabilities arising out of your use of these resources.

TI’s products are provided subject to TI’s Terms of Sale or other applicable terms available either on ti.com or provided in conjunction with such TI products. TI’s provision of these resources does not expand or otherwise alter TI’s applicable warranties or warranty disclaimers for TI products.

TI objects to and rejects any additional or different terms you may have proposed.

Mailing Address: Texas Instruments, Post Office Box 655303, Dallas, Texas 75265
Copyright © 2025, Texas Instruments Incorporated