SN74LVC1G32 Single 2-Input Positive-OR Gate

1 Features

- Available in the Ultra-Small 0.64 mm^2 Package (DPW) with 0.5-mm Pitch
- Supports 5-V V_{CC} Operation
- Inputs Accept Voltages to 5.5-V
- Supports Down Translation to V_{CC}
- Max t_{pd} of 3.6 ns at 3.3-V
- Low Power Consumption, 10-µA Max I_{CC}
- ±24-mA Output Drive at 3.3-V
- I_{off} Supports Live Insertion, Partial-Power-Down Mode, and Back-Drive Protection
- Latch-Up Performance Exceeds 100 mA Per JESD 78, Class II
- ESD Protection Exceeds JESD 22
  - 2000-V Human-Body Model (A114-A)
  - 200-V Machine Model (A115-A)
  - 1000-V Charged-Device Model (C101)

2 Applications

- AV Receiver
- Blu-ray Player and Home Theater
- Digital Picture Frame (DPF)
- Embedded PC
- IP Phone: Wireless
- High-Speed Data Acquisition and Generation
- Motor Control: High-Voltage
- Optical Networking: Video Over Fiber and EPON
- Personal Navigation Device (GPS)
- Portable Media Player
- Private Branch Exchange (PBX)
- Server PSU
- SSD: Internal and External
- TV: LCD/Digital and High-Definition (HDTV)
- Telecom Shelter: Power Distribution Unit (PDU), Power Monitoring Unit (PMU), Wireless Battery Monitoring, Remote Electrical Tilt Unit (RET), Remote Radio Unit (RRU), Tower Mounted Amplifier (TMA)
- Video Conferencing: IP-Based HD
- Vector Signal Analyzer and Generator
- WiMAX and Wireless Infrastructure Equipment
- Wireless Headset, Keyboard, Mouse, and Repeater

3 Description

This single 2-input positive-OR gate is designed for 1.65-V to 5.5-V V_{CC} operation.

The SN74LVC1G32 device performs the Boolean function $Y = A + B$ or $Y = \overline{\overline{A} \bullet \overline{B}}$ in positive logic.

The CMOS device has high output drive while maintaining low static power dissipation over a broad V_{CC} operating range.

The SN74LVC1G32 device is available in a variety of packages, including the ultra-small DPW package with a body size of 0.8 × 0.8 mm.

Device Information(1)

DEVICE NAME	PACKAGE (PINS)	BODY SIZE
SN74LVC1G32DBV	SOT-23 (5)	2.90 mm × 2.80 mm
SN74LVC1G32DCK	SC70 (5)	2.00mm × 2.10 mm
SN74LVC1G32DRY	SON (6)	1.45 mm × 1.00 mm
SN74LVC1G32DSF	SON (6)	1.00 mm × 1.00 mm
SN74LVC1G32DPW	X2SON (4)	0.80 mm × 0.80 mm
SN74LVC1G32DRL	SOT (5)	1.60 mm × 1.60 mm
SN74LVC1G32YZP	DSBGA (5)	1.38 mm × 0.88 mm

(1) For all available packages, see the orderable addendum at the end of the data sheet.

An IMPORTANT NOTICE at the end of this data sheet addresses availability, warranty, changes, use in safety-critical applications, intellectual property matters and other important disclaimers. PRODUCTION DATA.

Table of Contents

1 **Features** ... 1
2 **Applications** ... 1
3 **Description** ... 1
4 **Revision History** ... 2
5 **Pin Configuration and Functions** ... 4
6 **Specifications** ... 5
6.1 Absolute Maximum Ratings ... 5
6.2 ESD Ratings ... 5
6.3 Recommended Operating Conditions ... 6
6.4 Thermal Information ... 6
6.5 Electrical Characteristics ... 7
6.6 Switching Characteristics, C_L = 15 pF ... 7
6.7 Switching Characteristics, 1.8 V and 2.5V ... 7
6.8 Switching Characteristics, 3.3 V and 5 V ... 8
6.9 Operating Characteristics ... 8
6.10 Typical Characteristics ... 8
7 **Parameter Measurement Information** ... 9
8 **Detailed Description** ... 11
8.1 Overview ... 11
8.2 Functional Block Diagram ... 11
8.3 Feature Description ... 11
8.4 Device Functional Modes ... 11
9 **Application and Implementation** ... 12
9.1 Application Information ... 12
9.2 Typical Application ... 12
10 **Power Supply Recommendations** ... 13
11 **Layout** ... 13
11.1 Layout Guidelines ... 13
11.2 Layout Example ... 13
12 **Device and Documentation Support** ... 14
12.1 Community Resources ... 14
12.2 Trademarks ... 14
12.3 Electrostatic Discharge Caution ... 14
12.4 Glossary ... 14
13 **Mechanical, Packaging, and Orderable Information** ... 14
13.1 Package Option Addendum ... 18

4 Revision History

Changes from Revision U (April 2014) to Revision V	Page
• Added T_J junction temp spec to Abs Max Ratings	5

Changes from Revision T (March 2014) to Revision U	Page
• Updated Features, Description, and Device Information table.	1
• Added Pin Functions table.	4
• Added Thermal Information table.	6
• Added Detailed Description section.	11
• Added Application and Implementation section.	12
• Added Layout section.	13

Changes from Revision S (July 2013) to Revision T	Page
• Updated Features.	1
• Added Applications.	1
• Added Device Information table.	1
• Added DPW Package.	4
• Moved T_{stg} to Handling Ratings table.	5

Changes from Revision R (June 2013) to Revision S	Page
• Added parameter values for –40 to 125°C temperature ratings.	7

Copyright © 1999–2015, Texas Instruments Incorporated

Changes from Revision Q (November 2012) to Revision R **Page**

- Deleted Ordering Information table. 1

5 Pin Configuration and Functions

DBV PACKAGE (TOP VIEW)

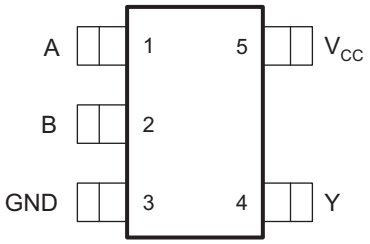

DCK PACKAGE (TOP VIEW)

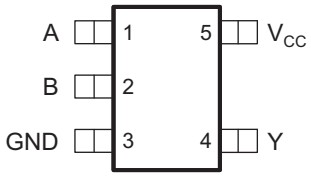

DRL PACKAGE (TOP VIEW)

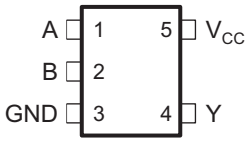

DSF PACKAGE (TOP VIEW)

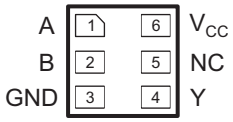

DPW PACKAGE (TOP VIEW)

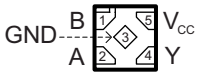

YZP PACKAGE (BOTTOM VIEW)

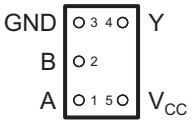

DRY PACKAGE (TOP VIEW)

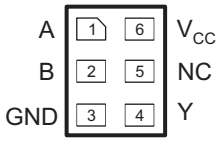

NC – No internal connection

See mechanical drawings for dimensions.

Pin Functions

PIN				DESCRIPTION
NAME	DBV, DCK, DRL, YZP	DRY, DSF	DPW	
A	1	1	2	Input
B	2	2	1	Input
GND	3	3	3	Ground
Y	4	4	4	Output
VCC	5	6	5	Power pin
NC	–	5	–	Not connected

Copyright © 1999–2015, Texas Instruments Incorporated

6 Specifications

6.1 Absolute Maximum Ratings

over operating free-air temperature range (unless otherwise noted)[1]

			MIN	MAX	UNIT
V_{CC}	Supply voltage range		–0.5	6.5	V
V_I	Input voltage range[2]		–0.5	6.5	V
V_O	Voltage range applied to any output in the high-impedance or power-off state[2]		–0.5	6.5	V
V_O	Voltage range applied to any output in the high or low state[2][3]		–0.5	V_{CC} + 0.5	V
I_{IK}	Input clamp current	$V_I < 0$		–50	mA
I_{OK}	Output clamp current	$V_O < 0$		–50	mA
I_O	Continuous output current			±50	mA
	Continuous current through V_{CC} or GND			±100	mA
T_J	Junction temperature		–65	150	°C
T_{stg}	Storage temperature		–65	150	°C

(1) Stresses beyond those listed under *Absolute Maximum Ratings* may cause permanent damage to the device. These are stress ratings only, and functional operation of the device at these or any other conditions beyond those indicated under *Recommended Operating Conditions* is not implied. Exposure to absolute-maximum-rated conditions for extended periods may affect device reliability.
(2) The input and output negative-voltage ratings may be exceeded if the input and output current ratings are observed.
(3) The value of V_{CC} is provided in the *Recommended Operating Conditions* table.

6.2 ESD Ratings

PARAMETER		DEFINITION	VAUE	UNIT
$V_{(ESD)}$	Electrostatic discharge	Human body model (HBM), per ANSI/ESDA/JEDEC JS-001, all pins[1]	±2000	V
		Charged device model (CDM), per JEDEC specification JESD22-C101, all pins[2]	±1000	

(1) JEDEC document JEP155 states that 500-V HBM allows safe manufacturing with a standard ESD control process.
(2) JEDEC document JEP157 states that 250-V CDM allows safe manufacturing with a standard ESD control process.

Copyright © 1999–2015, Texas Instruments Incorporated

6.3 Recommended Operating Conditions

over operating free-air temperature range (unless otherwise noted)[1]

			MIN	MAX	UNIT
V_{CC}	Supply voltage	Operating	1.65	5.5	V
		Data retention only	1.5		
V_{IH}	High-level input voltage	V_{CC} = 1.65 V to 1.95 V	0.65 × V_{CC}		V
		V_{CC} = 2.3 V to 2.7 V	1.7		
		V_{CC} = 3 V to 3.6 V	2		
		V_{CC} = 4.5 V to 5.5 V	0.7 × V_{CC}		
V_{IL}	Low-level input voltage	V_{CC} = 1.65 V to 1.95 V		0.35 × V_{CC}	V
		V_{CC} = 2.3 V to 2.7 V		0.7	
		V_{CC} = 3 V to 3.6 V		0.8	
		V_{CC} = 4.5 V to 5.5 V		0.3 × V_{CC}	
V_I	Input voltage		0	5.5	V
V_O	Output voltage		0	V_{CC}	V
I_{OH}	High-level output current	V_{CC} = 1.65 V		–4	mA
		V_{CC} = 2.3 V		–8	
		V_{CC} = 3 V		–16	
				–24	
		V_{CC} = 4.5 V		–32	
I_{OL}	Low-level output current	V_{CC} = 1.65 V		4	mA
		V_{CC} = 2.3 V		8	
		V_{CC} = 3 V		16	
				24	
		V_{CC} = 4.5 V		32	
Δt/Δv	Input transition rise or fall rate	V_{CC} = 1.8 V ± 0.15 V, 2.5 V ± 0.2 V		20	ns/V
		V_{CC} = 3.3 V ± 0.3 V		10	
		V_{CC} = 5 V ± 0.5 V		5	
T_A	Operating free-air temperature	DSBGA package	–40	85	°C
		All other packages	-40	125	°C

(1) All unused inputs of the device must be held at V_{CC} or GND to ensure proper device operation. Refer to the TI application report, *Implications of Slow or Floating CMOS Inputs*, literature number SCBA004.

6.4 Thermal Information

THERMAL METRIC[1]		SN74LVC1G32						UNIT
		DBV	DCK	DRL	DRY	YZP	DPW	
		5 PINS	5 PINS	5 PINS	6 PINS	5 PINS	4 PINS	
$R_{\theta JA}$	Junction-to-ambient thermal resistance	229	278	243	439	130	340	°C/W
$R_{\theta JCtop}$	Junction-to-case (top) thermal resistance	164	93	78	277	54	215	
$R_{\theta JB}$	Junction-to-board thermal resistance	62	65	78	271	51	294	
ψ_{JT}	Junction-to-top characterization parameter	44	2	10	84	1	41	
ψ_{JB}	Junction-to-board characterization parameter	62	64	77	271	50	294	
$R_{\theta JCbot}$	Junction-to-case (bottom) thermal resistance	–	–	–	–	–	250	

(1) For more information about traditional and new thermal metrics, see the *Semiconductor and IC Package Thermal Metrics* application report (SPRA953).

Copyright © 1999–2015, Texas Instruments Incorporated

6.5 Electrical Characteristics

over recommended operating free-air temperature range (unless otherwise noted)

PARAMETER		TEST CONDITIONS	V_{CC}	–40°C to 85°C			–40°C to 125°C RECOMMENDED			UNIT
				MIN	TYP(1)	MAX	MIN	TYP	MAX	
V_{OH}		I_{OH} = –100 µA	1.65 V to 5.5 V	V_{CC} – 0.1			V_{CC} – 0.1			V
		I_{OH} = –4 mA	1.65 V	1.2			1.2			
		I_{OH} = –8 mA	2.3 V	1.9			1.9			
		I_{OH} = –16 mA	3 V	2.4			2.4			
		I_{OH} = –24 mA		2.3			2.3			
		I_{OH} = –32 mA	4.5 V	3.8			3.8			
V_{OL}		I_{OL} = 100 µA	1.65 V to 5.5 V			0.1			0.1	V
		I_{OL} = 4 mA	1.65 V			0.45			0.45	
		I_{OL} = 8 mA	2.3 V			0.3			0.4	
		I_{OL} = 16 mA	3 V			0.4			0.5	
		I_{OL} = 24 mA				0.55			0.65	
		I_{OL} = 32 mA	4.5 V			0.55			0.65	
I_I	A or B inputs	V_I = 5.5 V or GND	0 to 5.5 V			±5			±5	µA
I_{off}		V_I or V_O = 5.5 V	0			±10			±25	µA
I_{CC}		V_I = 5.5 V or GND, I_O = 0	1.65 V to 5.5 V			10			10	µA
ΔI_{CC}		One input at V_{CC} – 0.6 V, Other inputs at V_{CC} or GND	3 V to 5.5 V			500			500	µA
C_i		V_I = V_{CC} or GND	3.3 V		4			4		pF

(1) All typical values are at V_{CC} = 3.3 V, T_A = 25°C.

6.6 Switching Characteristics, C_L = 15 pF

over recommended operating free-air temperature range, C_L = 15 pF (unless otherwise noted) (see Figure 3)

PARAMETER	FROM (INPUT)	TO (OUTPUT)	–40°C to 85°C								UNIT
			V_{CC} = 1.8 V ± 0.15 V		V_{CC} = 2.5 V ± 0.2 V		V_{CC} = 3.3 V ± 0.3 V		V_{CC} = 5 V ± 0.5 V		
			MIN	MAX	MIN	MAX	MIN	MAX	MIN	MAX	
t_{pd}	A or B	Y	1.9	7.2	0.8	4.4	0.9	3.6	0.8	3.4	ns

6.7 Switching Characteristics, 1.8 V and 2.5V

over recommended operating free-air temperature range, C_L = 30 pF or 50 pF (unless otherwise noted)(1) (see Figure 4)

PARAMETER	FROM (INPUT)	TO (OUTPUT)	–40°C to 85°C		–40°C to 125°C RECOMMENDED		–40°C to 85°C		–40°C to 125°C RECOMMENDED		UNIT
			V_{CC} = 1.8 V ± 0.15 V		V_{CC} = 1.8 V ± 0.15 V		V_{CC} = 2.5 V ± 0.2 V		V_{CC} = 2.5 V ± 0.2 V		
			MIN	MAX	MIN	MAX	MIN	MAX	MIN	MAX	
t_{pd}	A or B	Y	2.8	8	2.8	9	1.2	5.5	1.2	6	ns

(1) On products compliant to MIL-PRF-38535, this parameter is not production tested.

Copyright © 1999–2015, Texas Instruments Incorporated

6.8 Switching Characteristics, 3.3 V and 5 V

over recommended operating free-air temperature range, C_L = 30 pF or 50 pF (unless otherwise noted)(1) (see Figure 4)

PARAMETER	FROM (INPUT)	TO (OUTPUT)	–40°C to 85°C		–40°C to 125°C RECOMMENDED		–40°C to 85°C		–40°C to 125°C RECOMMENDED		UNIT
			V_{CC} = 3.3 V ± 0.3 V		V_{CC} = 3.3 V ± 0.3 V		V_{CC} = 5 V ± 0.5 V		V_{CC} = 5 V ± 0.5 V		
			MIN	MAX	MIN	MAX	MIN	MAX	MIN	MAX	
t_{pd}	A or B	Y	1.1	4.5	1	4	1	4	1	4.5	ns

(1) On products compliant to MIL-PRF-38535, this parameter is not production tested

6.9 Operating Characteristics

T_A = 25°C

PARAMETER		TEST CONDITIONS	V_{CC} = 1.8 V	V_{CC} = 2.5 V	V_{CC} = 3.3 V	V_{CC} = 5 V	UNIT
			TYP	TYP	TYP	TYP	
C_{pd}	Power dissipation capacitance	f = 10 MHz	20	20	21	22	pF

6.10 Typical Characteristics

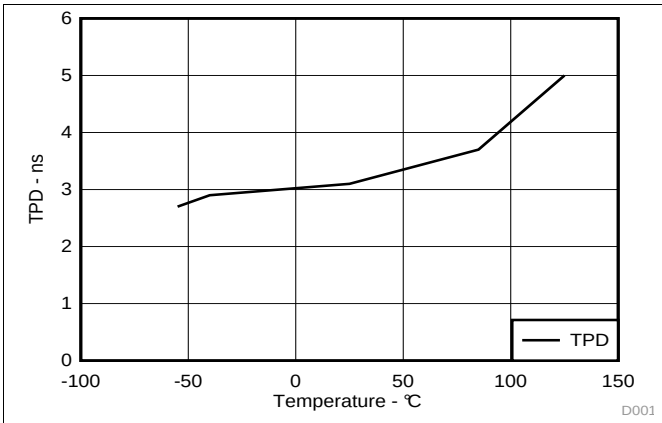

Figure 1. TPD Across Temperature at 3.3 V V_{CC}

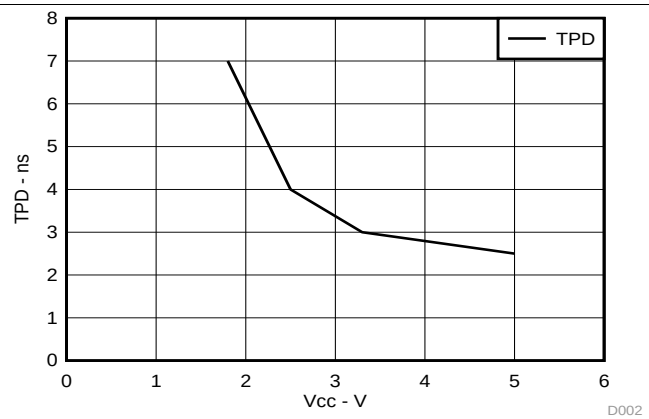

Figure 2. TPD Across V_{CC} at 25°C

Copyright © 1999–2015, Texas Instruments Incorporated

7 Parameter Measurement Information

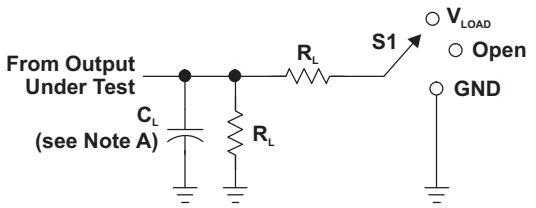

LOAD CIRCUIT

TEST	S1
t_{PLH}/t_{PHL}	Open
t_{PLZ}/t_{PZL}	V_{LOAD}
t_{PHZ}/t_{PZH}	GND

V_{CC}	INPUTS		V_M	V_{LOAD}	C_L	R_L	V_Δ
	V_I	t_r/t_f					
1.8 V ± 0.15 V	V_{CC}	≤2 ns	$V_{CC}/2$	2 × V_{CC}	15 pF	1 MΩ	0.15 V
2.5 V ± 0.2 V	V_{CC}	≤2 ns	$V_{CC}/2$	2 × V_{CC}	15 pF	1 MΩ	0.15 V
3.3 V ± 0.3 V	3 V	≤2.5 ns	1.5 V	6 V	15 pF	1 MΩ	0.3 V
5 V ± 0.5 V	V_{CC}	≤2.5 ns	$V_{CC}/2$	2 × V_{CC}	15 pF	1 MΩ	0.3 V

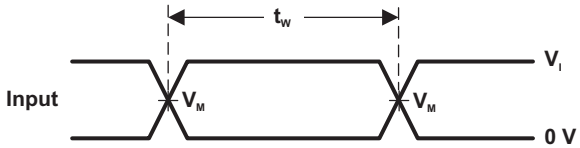

VOLTAGE WAVEFORMS
PULSE DURATION

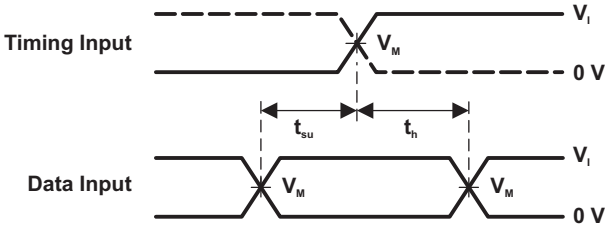

VOLTAGE WAVEFORMS
SETUP AND HOLD TIMES

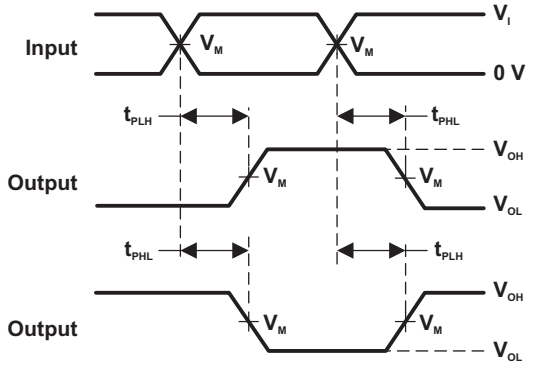

VOLTAGE WAVEFORMS
PROPAGATION DELAY TIMES
INVERTING AND NONINVERTING OUTPUTS

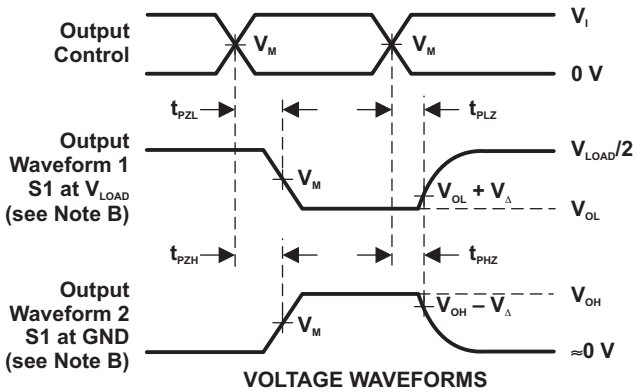

VOLTAGE WAVEFORMS
ENABLE AND DISABLE TIMES
LOW- AND HIGH-LEVEL ENABLING

NOTES: A. C_L includes probe and jig capacitance.
B. Waveform 1 is for an output with internal conditions such that the output is low, except when disabled by the output control. Waveform 2 is for an output with internal conditions such that the output is high, except when disabled by the output control.
C. All input pulses are supplied by generators having the following characteristics: PRR ≤ 10 MHz, Z_O = 50 Ω.
D. The outputs are measured one at a time, with one transition per measurement.
E. t_{PLZ} and t_{PHZ} are the same as t_{dis}.
F. t_{PZL} and t_{PZH} are the same as t_{en}.
G. t_{PLH} and t_{PHL} are the same as t_{pd}.
H. All parameters and waveforms are not applicable to all devices.

Figure 3. Load Circuit and Voltage Waveforms

Parameter Measurement Information (continued)

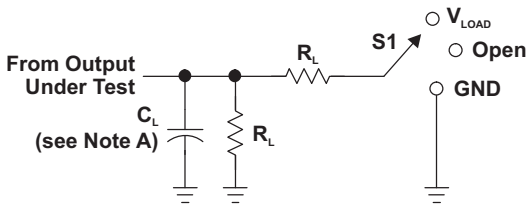

LOAD CIRCUIT

TEST	S1
t_{PLH}/t_{PHL}	Open
t_{PLZ}/t_{PZL}	V_{LOAD}
t_{PHZ}/t_{PZH}	GND

V_{CC}	INPUTS		V_M	V_{LOAD}	C_L	R_L	V_Δ
	V_I	t_r/t_f					
1.8 V ± 0.15 V	V_{CC}	≤2 ns	$V_{CC}/2$	2 × V_{CC}	30 pF	1 kΩ	0.15 V
2.5 V ± 0.2 V	V_{CC}	≤2 ns	$V_{CC}/2$	2 × V_{CC}	30 pF	500 Ω	0.15 V
3.3 V ± 0.3 V	3 V	≤2.5 ns	1.5 V	6 V	50 pF	500 Ω	0.3 V
5 V ± 0.5 V	V_{CC}	≤2.5 ns	$V_{CC}/2$	2 × V_{CC}	50 pF	500 Ω	0.3 V

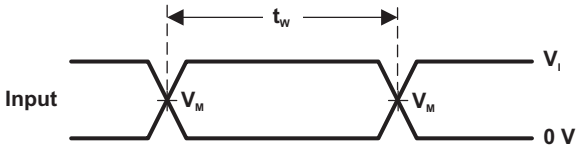

VOLTAGE WAVEFORMS
PULSE DURATION

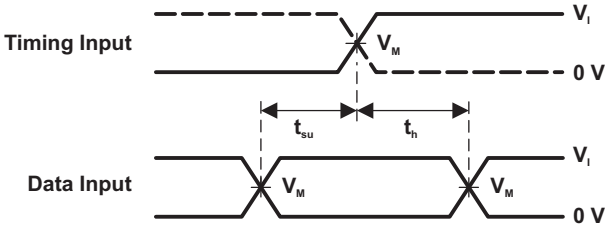

VOLTAGE WAVEFORMS
SETUP AND HOLD TIMES

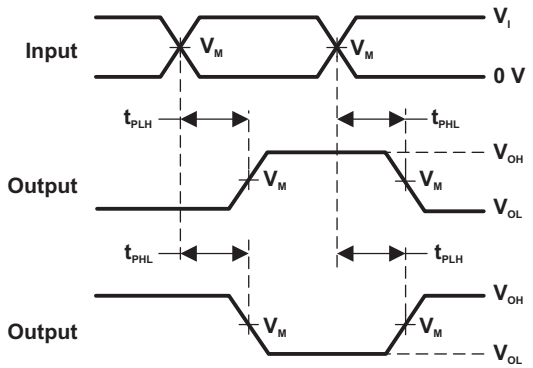

VOLTAGE WAVEFORMS
PROPAGATION DELAY TIMES
INVERTING AND NONINVERTING OUTPUTS

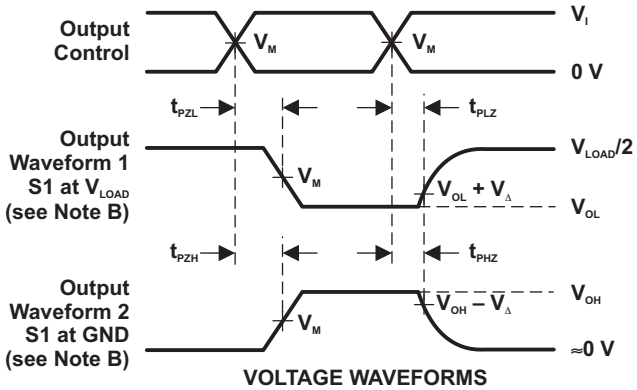

VOLTAGE WAVEFORMS
ENABLE AND DISABLE TIMES
LOW- AND HIGH-LEVEL ENABLING

NOTES: A. C_L includes probe and jig capacitance.
B. Waveform 1 is for an output with internal conditions such that the output is low, except when disabled by the output control. Waveform 2 is for an output with internal conditions such that the output is high, except when disabled by the output control.
C. All input pulses are supplied by generators having the following characteristics: PRR ≤ 10 MHz, Z_O = 50 Ω.
D. The outputs are measured one at a time, with one transition per measurement.
E. t_{PLZ} and t_{PHZ} are the same as t_{dis}.
F. t_{PZL} and t_{PZH} are the same as t_{en}.
G. t_{PLH} and t_{PHL} are the same as t_{pd}.
H. All parameters and waveforms are not applicable to all devices.

Figure 4. Load Circuit and Voltage Waveforms

Copyright © 1999–2015, Texas Instruments Incorporated

8 Detailed Description

8.1 Overview

The SN74LVC1G32 device contains one 2-input positive OR gate device and performs the Boolean function $Y = A + B$ or $Y = \overline{\overline{A} \bullet \overline{B}}$. This device is fully specified for partial-power-down applications using I_{off}. The I_{off} circuitry disables the outputs, preventing damaging current backflow through the device when it is powered down.

The DPW package technology is a major breakthrough in IC packaging. Its tiny 0.64 mm square footprint saves significant board space over other package options while still retaining the traditional manufacturing friendly lead pitch of 0.5 mm.

8.2 Functional Block Diagram

8.3 Feature Description

- Wide operating voltage range.
  - Operates from 1.65 V to 5.5 V.
- Allows down voltage translation.
- Inputs accept voltages to 5.5 V.
- I_{off} feature allows voltages on the inputs and outputs, when V_{CC} is 0 V.

8.4 Device Functional Modes

Function Table

INPUTS		OUTPUT
A	B	Y
H	X	H
X	H	H
L	L	L

9 Application and Implementation

9.1 Application Information

The SN74LVC1G32 device is a high drive CMOS device that can be used for implementing OR logic with a high output drive, such as an LED application. It can produce 24 mA of drive current at 3.3 V making it Ideal for driving multiple outputs and good for high speed applications up to 100 MHz. The inputs are 5.5-V tolerant allowing translation down to V_{CC}.

9.2 Typical Application

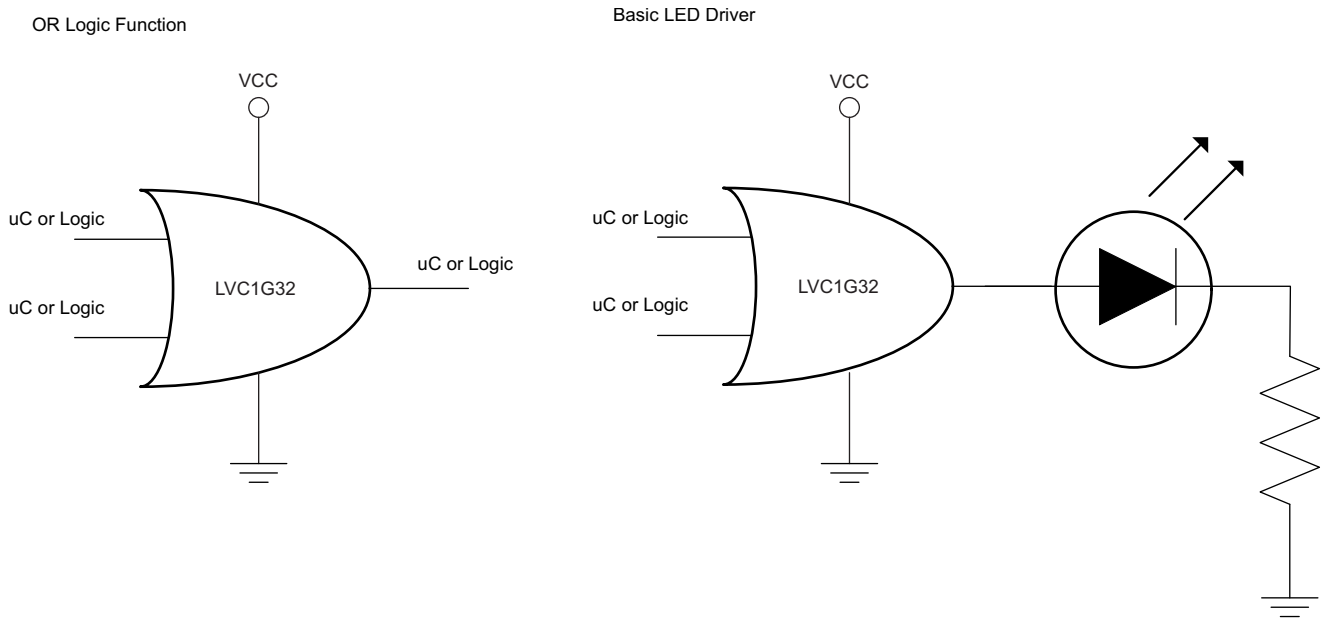

9.2.1 Design Requirements

This device uses CMOS technology and has balanced output drive. Care should be taken to avoid bus contention because it can drive currents that would exceed maximum limits. The high drive will also create fast edges into light loads, so routing and load conditions should be considered to prevent ringing.

9.2.2 Detailed Design Procedure

1. Recommended Input Conditions:
   - Rise time and fall time specs. See (Δt/ΔV) in the *Recommended Operating Conditions* table.
   - Specified high and low levels. See (V_{IH} and V_{IL}) in the *Recommended Operating Conditions* table.
   - Inputs are overvoltage tolerant allowing them to go as high as (V_I max) in the *Recommended Operating Conditions* table at any valid V_{CC}.
2. Recommend Output Conditions:
   - Load currents should not exceed (I_O max) per output and should not exceed total current (continuous current through V_{CC} or GND) for the part. These limits are located in the *Absolute Maximum Ratings* table.
   - Outputs should not be pulled above V_{CC}.

Copyright © 1999–2015, Texas Instruments Incorporated

Typical Application (continued)

9.2.3 Application Curves

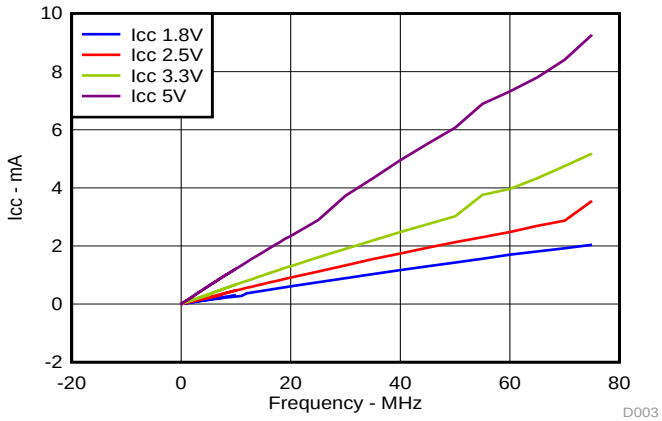

Figure 5. I_{CC} vs Frequency

10 Power Supply Recommendations

The power supply can be any voltage between the min and max supply voltage rating located in the *Recommended Operating Conditions* table.

Each VCC pin should have a good bypass capacitor to prevent power disturbance. For devices with a single supply, a 0.1-μF capacitor is recommended. If there are multiple VCC pins, then a 0.01-μF or 0.022-μF capacitor is recommended for each power pin. It is ok to parallel multiple bypass capacitors to reject different frequencies of noise. A 0.1-μF and 1-μF capacitors are commonly used in parallel. The bypass capacitor should be installed as close to the power pin as possible for best results.

11 Layout

11.1 Layout Guidelines

When using multiple bit logic devices inputs should not ever float.

In many cases, functions or parts of functions of digital logic devices are unused; for example, when only two inputs of a triple-input AND gate are used, or only 3 of the 4 buffer gates are used. Such input pins should not be left unconnected because the undefined voltages at the outside connections result in undefined operational states.

Specified in Layout Example are the rules that must be observed under all circumstances. All unused inputs of digital logic devices must be connected to a high or low bias to prevent them from floating. The logic level that should be applied to any particular unused input depends on the function of the device. Generally they will be tied to GND or VCC, whichever make more sense or is more convenient.

11.2 Layout Example

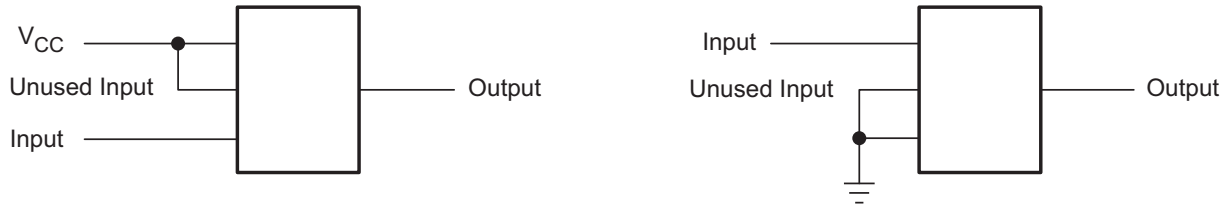

12 Device and Documentation Support

12.1 Community Resources

The following links connect to TI community resources. Linked contents are provided "AS IS" by the respective contributors. They do not constitute TI specifications and do not necessarily reflect TI's views; see TI's Terms of Use.

TI E2E™ Online Community ***TI's Engineer-to-Engineer (E2E) Community.*** Created to foster collaboration among engineers. At e2e.ti.com, you can ask questions, share knowledge, explore ideas and help solve problems with fellow engineers.

Design Support ***TI's Design Support*** Quickly find helpful E2E forums along with design support tools and contact information for technical support.

12.2 Trademarks

E2E is a trademark of Texas Instruments.
All other trademarks are the property of their respective owners.

12.3 Electrostatic Discharge Caution

These devices have limited built-in ESD protection. The leads should be shorted together or the device placed in conductive foam during storage or handling to prevent electrostatic damage to the MOS gates.

12.4 Glossary

SLYZ022 — *TI Glossary*.

This glossary lists and explains terms, acronyms, and definitions.

13 Mechanical, Packaging, and Orderable Information

The following pages include mechanical packaging and orderable information. This information is the most current data available for the designated devices. This data is subject to change without notice and revision of this document. For browser-based versions of this data sheet, refer to the left-hand navigation.

Copyright © 1999–2015, Texas Instruments Incorporated

PACKAGING INFORMATION

Orderable part number	Status (1)	Material type (2)	Package | Pins	Package qty | Carrier	RoHS (3)	Lead finish/ Ball material (4)	MSL rating/ Peak reflow (5)	Op temp (°C)	Part marking (6)
SN74LVC1G32DBVR	Active	Production	SOT-23 (DBV) | 5	3000 | LARGE T&R	Yes	NIPDAU | SN | NIPDAU	Level-1-260C-UNLIM	-40 to 125	(C325, C32F, C32J, C32K, C32R) (C32H, C32P, C32S)
SN74LVC1G32DBVR.A	Active	Production	SOT-23 (DBV) | 5	3000 | LARGE T&R	Yes	NIPDAU	Level-1-260C-UNLIM	-40 to 125	(C325, C32F, C32J, C32K, C32R) (C32H, C32P, C32S)
SN74LVC1G32DBVR.B	Active	Production	SOT-23 (DBV) | 5	3000 | LARGE T&R	Yes	NIPDAU	Level-1-260C-UNLIM	-40 to 125	(C325, C32F, C32J, C32K, C32R) (C32H, C32P, C32S)
SN74LVC1G32DBVRE4	Active	Production	SOT-23 (DBV) | 5	3000 | LARGE T&R	Yes	NIPDAU	Level-1-260C-UNLIM	-40 to 125	C32F
SN74LVC1G32DBVRG4	Active	Production	SOT-23 (DBV) | 5	3000 | LARGE T&R	Yes	NIPDAU	Level-1-260C-UNLIM	-40 to 125	C32F
SN74LVC1G32DBVRG4.B	Active	Production	SOT-23 (DBV) | 5	3000 | LARGE T&R	Yes	NIPDAU	Level-1-260C-UNLIM	-40 to 125	C32F
SN74LVC1G32DBVT	Active	Production	SOT-23 (DBV) | 5	250 | SMALL T&R	Yes	NIPDAU | SN | NIPDAU	Level-1-260C-UNLIM	-40 to 125	(C325, C32F, C32J, C32K, C32R) (C32H, C32P, C32S)
SN74LVC1G32DBVT.B	Active	Production	SOT-23 (DBV) | 5	250 | SMALL T&R	Yes	NIPDAU	Level-1-260C-UNLIM	-40 to 125	(C325, C32F, C32J, C32K, C32R) (C32H, C32P, C32S)
SN74LVC1G32DBVTG4	Active	Production	SOT-23 (DBV) | 5	250 | SMALL T&R	Yes	NIPDAU	Level-1-260C-UNLIM	-40 to 125	C32F
SN74LVC1G32DBVTG4.B	Active	Production	SOT-23 (DBV) | 5	250 | SMALL T&R	Yes	NIPDAU	Level-1-260C-UNLIM	-40 to 125	C32F
SN74LVC1G32DCK3	Last Time Buy	Production	SC70 (DCK) | 5	3000 | LARGE T&R	Yes	SNBI	Level-1-260C-UNLIM	-40 to 125	(CGF, CGZ)
SN74LVC1G32DCK3.A	Last Time Buy	Production	SC70 (DCK) | 5	3000 | LARGE T&R	Yes	SNBI	Level-1-260C-UNLIM	-40 to 125	(CGF, CGZ)
SN74LVC1G32DCK3.B	Last Time Buy	Production	SC70 (DCK) | 5	3000 | LARGE T&R	Yes	SNBI	Level-1-260C-UNLIM	-40 to 125	(CGF, CGZ)
SN74LVC1G32DCKR	Active	Production	SC70 (DCK) | 5	3000 | LARGE T&R	Yes	NIPDAU | SN | NIPDAU	Level-1-260C-UNLIM	-40 to 125	(CG5, CGF, CGJ, CGK, CGR) (CGH, CGP, CGS)

Orderable part number	Status (1)	Material type (2)	Package | Pins	Package qty | Carrier	RoHS (3)	Lead finish/ Ball material (4)	MSL rating/ Peak reflow (5)	Op temp (°C)	Part marking (6)
SN74LVC1G32DCKR.A	Active	Production	SC70 (DCK) | 5	3000 | LARGE T&R	Yes	NIPDAU	Level-1-260C-UNLIM	-40 to 125	(CG5, CGF, CGJ, CGK, CGR) (CGH, CGP, CGS)
SN74LVC1G32DCKR.B	Active	Production	SC70 (DCK) | 5	3000 | LARGE T&R	Yes	NIPDAU	Level-1-260C-UNLIM	-40 to 125	(CG5, CGF, CGJ, CGK, CGR) (CGH, CGP, CGS)
SN74LVC1G32DCKRE4	Active	Production	SC70 (DCK) | 5	3000 | LARGE T&R	Yes	NIPDAU	Level-1-260C-UNLIM	-40 to 125	CG5 CGS
SN74LVC1G32DCKRG4	Active	Production	SC70 (DCK) | 5	3000 | LARGE T&R	Yes	NIPDAU	Level-1-260C-UNLIM	-40 to 125	CG5 CGS
SN74LVC1G32DCKRG4.A	Active	Production	SC70 (DCK) | 5	3000 | LARGE T&R	Yes	NIPDAU	Level-1-260C-UNLIM	-40 to 125	CG5 CGS
SN74LVC1G32DCKRG4.B	Active	Production	SC70 (DCK) | 5	3000 | LARGE T&R	Yes	NIPDAU	Level-1-260C-UNLIM	-40 to 125	CG5 CGS
SN74LVC1G32DCKT	Active	Production	SC70 (DCK) | 5	250 | SMALL T&R	Yes	NIPDAU | SN | NIPDAU	Level-1-260C-UNLIM	-40 to 125	(CG5, CGF, CGJ, CGK, CGR) (CGH, CGP, CGS)
SN74LVC1G32DCKT.B	Active	Production	SC70 (DCK) | 5	250 | SMALL T&R	Yes	NIPDAU	Level-1-260C-UNLIM	-40 to 125	(CG5, CGF, CGJ, CGK, CGR) (CGH, CGP, CGS)
SN74LVC1G32DCKTG4	Active	Production	SC70 (DCK) | 5	250 | SMALL T&R	Yes	NIPDAU	Level-1-260C-UNLIM	-40 to 125	CG5 CGS
SN74LVC1G32DCKTG4.B	Active	Production	SC70 (DCK) | 5	250 | SMALL T&R	Yes	NIPDAU	Level-1-260C-UNLIM	-40 to 125	CG5 CGS
SN74LVC1G32DPWR	Active	Production	X2SON (DPW) | 5	3000 | LARGE T&R	Yes	NIPDAU	Level-1-260C-UNLIM	-40 to 125	N4
SN74LVC1G32DPWR.B	Active	Production	X2SON (DPW) | 5	3000 | LARGE T&R	Yes	NIPDAU	Level-1-260C-UNLIM	-40 to 125	N4
SN74LVC1G32DRLR	Active	Production	SOT-5X3 (DRL) | 5	4000 | LARGE T&R	Yes	NIPDAUAG	Level-1-260C-UNLIM	-40 to 125	(CG7, CGR)
SN74LVC1G32DRLR.A	Active	Production	SOT-5X3 (DRL) | 5	4000 | LARGE T&R	Yes	NIPDAUAG	Level-1-260C-UNLIM	-40 to 125	(CG7, CGR)
SN74LVC1G32DRLR.B	Active	Production	SOT-5X3 (DRL) | 5	4000 | LARGE T&R	Yes	NIPDAUAG	Level-1-260C-UNLIM	-40 to 125	(CG7, CGR)
SN74LVC1G32DRLRG4	Active	Production	SOT-5X3 (DRL) | 5	4000 | LARGE T&R	Yes	NIPDAUAG	Level-1-260C-UNLIM	-40 to 125	(CG7, CGR)
SN74LVC1G32DRY2	Active	Production	SON (DRY) | 6	5000 | LARGE T&R	Yes	NIPDAU	Level-1-260C-UNLIM	-40 to 125	CG
SN74LVC1G32DRY2.B	Active	Production	SON (DRY) | 6	5000 | LARGE T&R	Yes	NIPDAU	Level-1-260C-UNLIM	-40 to 125	CG
SN74LVC1G32DRY2G4	Active	Production	SON (DRY) | 6	5000 | LARGE T&R	Yes	NIPDAU	Level-1-260C-UNLIM	-40 to 125	CG
SN74LVC1G32DRY2G4.B	Active	Production	SON (DRY) | 6	5000 | LARGE T&R	Yes	NIPDAU	Level-1-260C-UNLIM	-40 to 125	CG

Orderable part number	Status (1)	Material type (2)	Package | Pins	Package qty | Carrier	RoHS (3)	Lead finish/ Ball material (4)	MSL rating/ Peak reflow (5)	Op temp (°C)	Part marking (6)
SN74LVC1G32DRYR	Active	Production	SON (DRY) | 6	5000 | LARGE T&R	Yes	NIPDAU	Level-1-260C-UNLIM	-40 to 125	CG
SN74LVC1G32DRYR.B	Active	Production	SON (DRY) | 6	5000 | LARGE T&R	Yes	NIPDAU	Level-1-260C-UNLIM	-40 to 125	CG
SN74LVC1G32DSF2	Active	Production	SON (DSF) | 6	5000 | LARGE T&R	Yes	NIPDAU	Level-1-260C-UNLIM	-40 to 125	CG
SN74LVC1G32DSF2.B	Active	Production	SON (DSF) | 6	5000 | LARGE T&R	Yes	NIPDAU	Level-1-260C-UNLIM	-40 to 125	CG
SN74LVC1G32DSFR	Active	Production	SON (DSF) | 6	5000 | LARGE T&R	Yes	NIPDAU | NIPDAUAG	Level-1-260C-UNLIM	-40 to 125	CG
SN74LVC1G32DSFR.B	Active	Production	SON (DSF) | 6	5000 | LARGE T&R	Yes	NIPDAUAG	Level-1-260C-UNLIM	-40 to 125	CG
SN74LVC1G32YZPR	Active	Production	DSBGA (YZP) | 5	3000 | LARGE T&R	Yes	SNAGCU	Level-1-260C-UNLIM	-40 to 85	(CG, CG7)
SN74LVC1G32YZPR.B	Active	Production	DSBGA (YZP) | 5	3000 | LARGE T&R	Yes	SNAGCU	Level-1-260C-UNLIM	-40 to 85	(CG, CG7)

(1) **Status:** For more details on status, see our product life cycle.

(2) **Material type:** When designated, preproduction parts are prototypes/experimental devices, and are not yet approved or released for full production. Testing and final process, including without limitation quality assurance, reliability performance testing, and/or process qualification, may not yet be complete, and this item is subject to further changes or possible discontinuation. If available for ordering, purchases will be subject to an additional waiver at checkout, and are intended for early internal evaluation purposes only. These items are sold without warranties of any kind.

(3) **RoHS values:** Yes, No, RoHS Exempt. See the TI RoHS Statement for additional information and value definition.

(4) **Lead finish/Ball material:** Parts may have multiple material finish options. Finish options are separated by a vertical ruled line. Lead finish/Ball material values may wrap to two lines if the finish value exceeds the maximum column width.

(5) **MSL rating/Peak reflow:** The moisture sensitivity level ratings and peak solder (reflow) temperatures. In the event that a part has multiple moisture sensitivity ratings, only the lowest level per JEDEC standards is shown. Refer to the shipping label for the actual reflow temperature that will be used to mount the part to the printed circuit board.

(6) **Part marking:** There may be an additional marking, which relates to the logo, the lot trace code information, or the environmental category of the part.

Multiple part markings will be inside parentheses. Only one part marking contained in parentheses and separated by a "~" will appear on a part. If a line is indented then it is a continuation of the previous line and the two combined represent the entire part marking for that device.

Important Information and Disclaimer: The information provided on this page represents TI's knowledge and belief as of the date that it is provided. TI bases its knowledge and belief on information provided by third parties, and makes no representation or warranty as to the accuracy of such information. Efforts are underway to better integrate information from third parties. TI has taken and continues to take reasonable steps to provide representative and accurate information but may not have conducted destructive testing or chemical analysis on incoming materials and chemicals. TI and TI suppliers consider certain information to be proprietary, and thus CAS numbers and other limited information may not be available for release.

In no event shall TI's liability arising out of such information exceed the total purchase price of the TI part(s) at issue in this document sold by TI to Customer on an annual basis.

OTHER QUALIFIED VERSIONS OF SN74LVC1G32 :

- Automotive : SN74LVC1G32-Q1
- Enhanced Product : SN74LVC1G32-EP

NOTE: Qualified Version Definitions:

- Automotive - Q100 devices qualified for high-reliability automotive applications targeting zero defects
- Enhanced Product - Supports Defense, Aerospace and Medical Applications

TAPE AND REEL INFORMATION

REEL DIMENSIONS

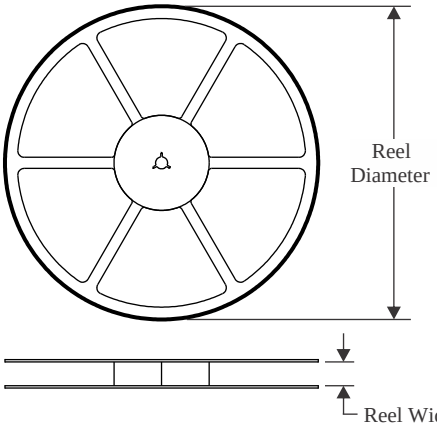

TAPE DIMENSIONS

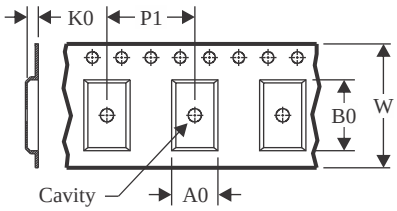

A0	Dimension designed to accommodate the component width
B0	Dimension designed to accommodate the component length
K0	Dimension designed to accommodate the component thickness
W	Overall width of the carrier tape
P1	Pitch between successive cavity centers

QUADRANT ASSIGNMENTS FOR PIN 1 ORIENTATION IN TAPE

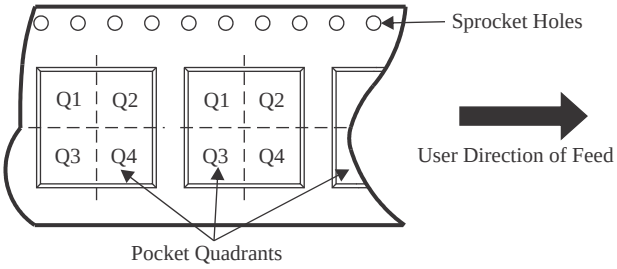

*All dimensions are nominal

Device	Package Type	Package Drawing	Pins	SPQ	Reel Diameter (mm)	Reel Width W1 (mm)	A0 (mm)	B0 (mm)	K0 (mm)	P1 (mm)	W (mm)	Pin1 Quadrant
SN74LVC1G32DBVR	SOT-23	DBV	5	3000	178.0	9.0	3.3	3.2	1.4	4.0	8.0	Q3
SN74LVC1G32DBVR	SOT-23	DBV	5	3000	180.0	8.4	3.2	3.2	1.4	4.0	8.0	Q3
SN74LVC1G32DBVR	SOT-23	DBV	5	3000	178.0	8.4	3.2	3.2	1.4	4.0	8.0	Q3
SN74LVC1G32DBVRG4	SOT-23	DBV	5	3000	178.0	9.0	3.23	3.17	1.37	4.0	8.0	Q3
SN74LVC1G32DBVT	SOT-23	DBV	5	250	180.0	8.4	3.2	3.2	1.4	4.0	8.0	Q3
SN74LVC1G32DBVT	SOT-23	DBV	5	250	180.0	8.4	3.2	3.2	1.4	4.0	8.0	Q3
SN74LVC1G32DBVTG4	SOT-23	DBV	5	250	178.0	9.0	3.23	3.17	1.37	4.0	8.0	Q3
SN74LVC1G32DCKR	SC70	DCK	5	3000	180.0	8.4	2.47	2.3	1.25	4.0	8.0	Q3
SN74LVC1G32DCKR	SC70	DCK	5	3000	178.0	9.0	2.4	2.5	1.2	4.0	8.0	Q3
SN74LVC1G32DCKRG4	SC70	DCK	5	3000	178.0	9.2	2.4	2.4	1.22	4.0	8.0	Q3
SN74LVC1G32DCKT	SC70	DCK	5	250	178.0	9.2	2.4	2.4	1.22	4.0	8.0	Q3
SN74LVC1G32DCKT	SC70	DCK	5	250	180.0	8.4	2.47	2.3	1.25	4.0	8.0	Q3
SN74LVC1G32DCKT	SC70	DCK	5	250	178.0	9.0	2.4	2.5	1.2	4.0	8.0	Q3
SN74LVC1G32DCKTG4	SC70	DCK	5	250	178.0	9.2	2.4	2.4	1.22	4.0	8.0	Q3
SN74LVC1G32DPWR	X2SON	DPW	5	3000	178.0	8.4	0.91	0.91	0.5	2.0	8.0	Q3
SN74LVC1G32DRLR	SOT-5X3	DRL	5	4000	180.0	8.4	1.98	1.78	0.69	4.0	8.0	Q3

Device	Package Type	Package Drawing	Pins	SPQ	Reel Diameter (mm)	Reel Width W1 (mm)	A0 (mm)	B0 (mm)	K0 (mm)	P1 (mm)	W (mm)	Pin1 Quadrant
SN74LVC1G32DRY2	SON	DRY	6	5000	180.0	9.5	1.6	1.15	0.75	4.0	8.0	Q3
SN74LVC1G32DRY2G4	SON	DRY	6	5000	180.0	9.5	1.6	1.15	0.75	4.0	8.0	Q3
SN74LVC1G32DRYR	SON	DRY	6	5000	180.0	9.5	1.15	1.6	0.75	4.0	8.0	Q1
SN74LVC1G32DSF2	SON	DSF	6	5000	180.0	9.5	1.16	1.16	0.5	4.0	8.0	Q3
SN74LVC1G32DSFR	SON	DSF	6	5000	180.0	9.5	1.16	1.16	0.5	4.0	8.0	Q2
SN74LVC1G32DSFR	SON	DSF	6	5000	180.0	8.4	1.16	1.16	0.63	4.0	8.0	Q2
SN74LVC1G32YZPR	DSBGA	YZP	5	3000	180.0	8.4	1.02	1.52	0.63	4.0	8.0	Q1

TAPE AND REEL BOX DIMENSIONS

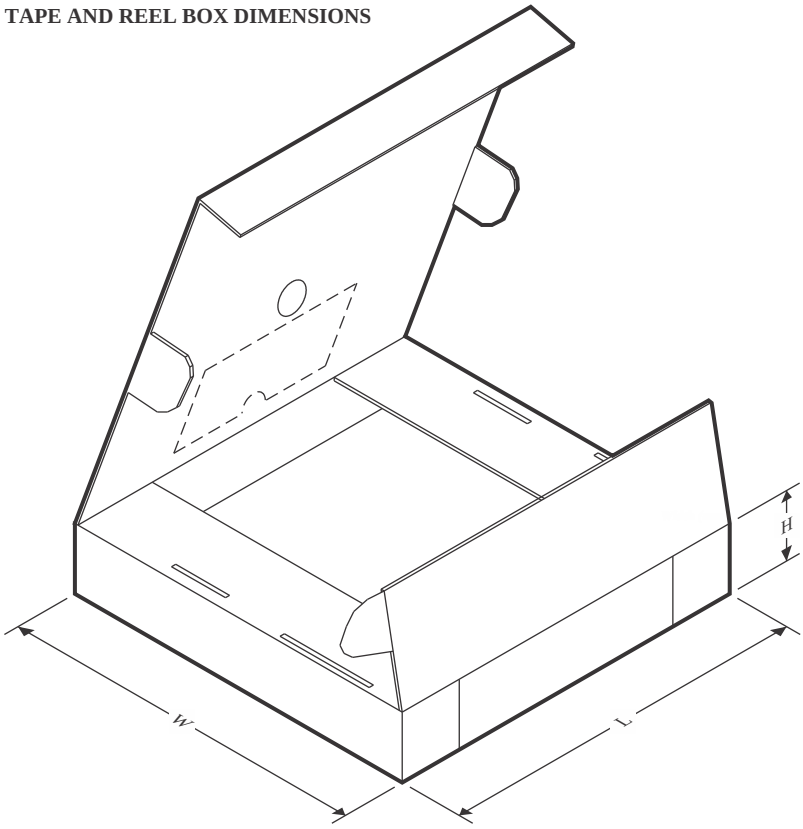

*All dimensions are nominal

Device	Package Type	Package Drawing	Pins	SPQ	Length (mm)	Width (mm)	Height (mm)
SN74LVC1G32DBVR	SOT-23	DBV	5	3000	180.0	180.0	18.0
SN74LVC1G32DBVR	SOT-23	DBV	5	3000	210.0	185.0	35.0
SN74LVC1G32DBVR	SOT-23	DBV	5	3000	208.0	191.0	35.0
SN74LVC1G32DBVRG4	SOT-23	DBV	5	3000	180.0	180.0	18.0
SN74LVC1G32DBVT	SOT-23	DBV	5	250	210.0	185.0	35.0
SN74LVC1G32DBVT	SOT-23	DBV	5	250	210.0	185.0	35.0
SN74LVC1G32DBVTG4	SOT-23	DBV	5	250	180.0	180.0	18.0
SN74LVC1G32DCKR	SC70	DCK	5	3000	202.0	201.0	28.0
SN74LVC1G32DCKR	SC70	DCK	5	3000	180.0	180.0	18.0
SN74LVC1G32DCKRG4	SC70	DCK	5	3000	180.0	180.0	18.0
SN74LVC1G32DCKT	SC70	DCK	5	250	180.0	180.0	18.0
SN74LVC1G32DCKT	SC70	DCK	5	250	202.0	201.0	28.0
SN74LVC1G32DCKT	SC70	DCK	5	250	180.0	180.0	18.0
SN74LVC1G32DCKTG4	SC70	DCK	5	250	180.0	180.0	18.0
SN74LVC1G32DPWR	X2SON	DPW	5	3000	205.0	200.0	33.0
SN74LVC1G32DRLR	SOT-5X3	DRL	5	4000	202.0	201.0	28.0
SN74LVC1G32DRY2	SON	DRY	6	5000	184.0	184.0	19.0
SN74LVC1G32DRY2G4	SON	DRY	6	5000	184.0	184.0	19.0

Device	Package Type	Package Drawing	Pins	SPQ	Length (mm)	Width (mm)	Height (mm)
SN74LVC1G32DRYR	SON	DRY	6	5000	184.0	184.0	19.0
SN74LVC1G32DSF2	SON	DSF	6	5000	184.0	184.0	19.0
SN74LVC1G32DSFR	SON	DSF	6	5000	184.0	184.0	19.0
SN74LVC1G32DSFR	SON	DSF	6	5000	202.0	201.0	28.0
SN74LVC1G32YZPR	DSBGA	YZP	5	3000	182.0	182.0	20.0

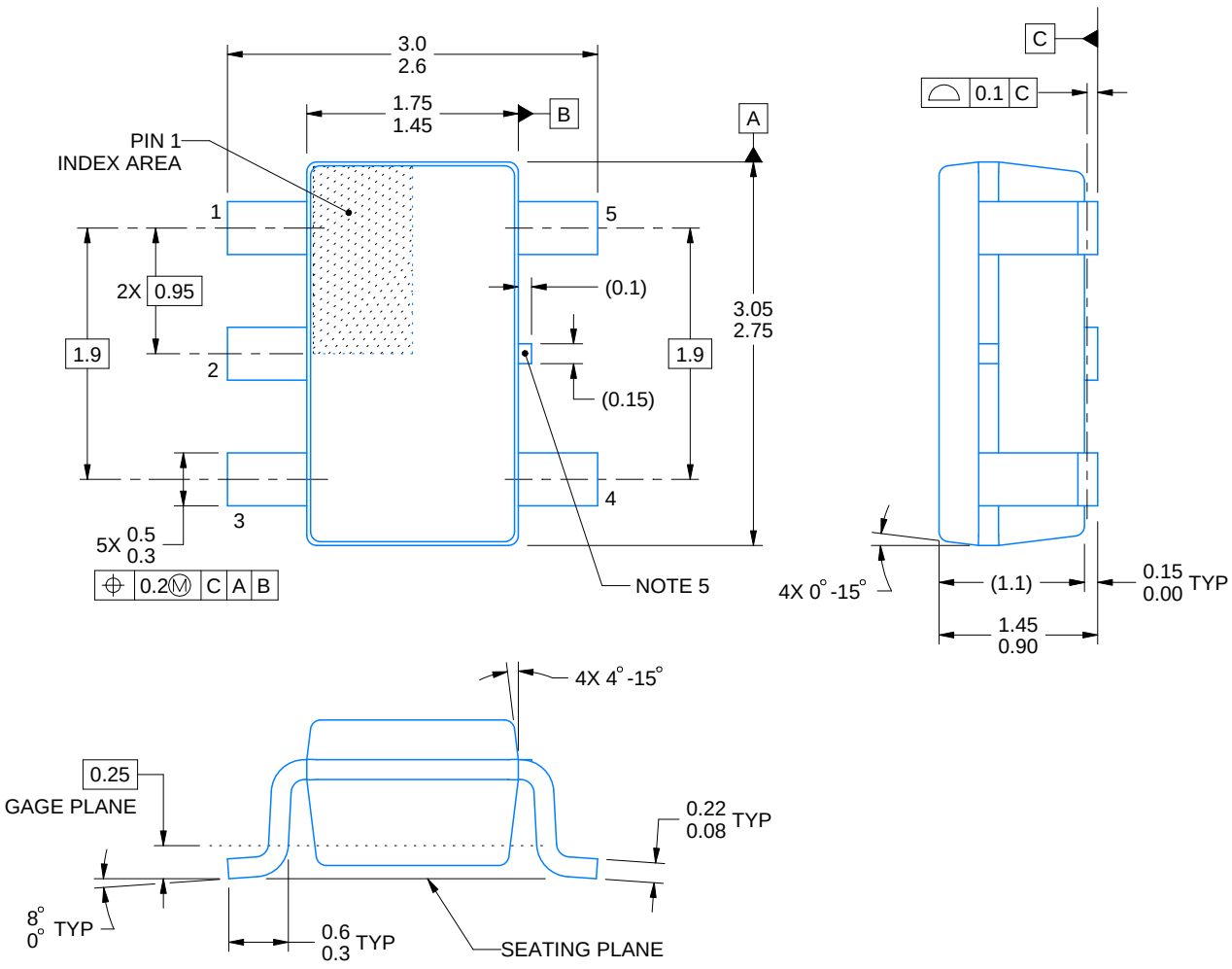

4214839/K 08/2024

NOTES:

1. All linear dimensions are in millimeters. Any dimensions in parenthesis are for reference only. Dimensioning and tolerancing per ASME Y14.5M.
2. This drawing is subject to change without notice.
3. Refernce JEDEC MO-178.
4. Body dimensions do not include mold flash, protrusions, or gate burrs. Mold flash, protrusions, or gate burrs shall not exceed 0.25 mm per side.
5. Support pin may differ or may not be present.

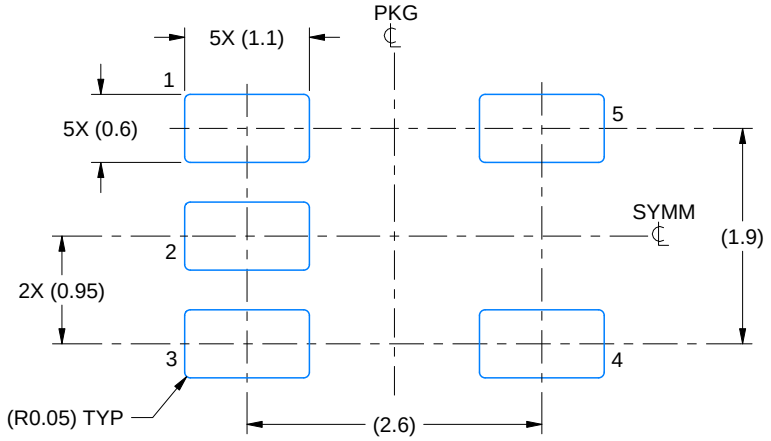

LAND PATTERN EXAMPLE
EXPOSED METAL SHOWN
SCALE:15X

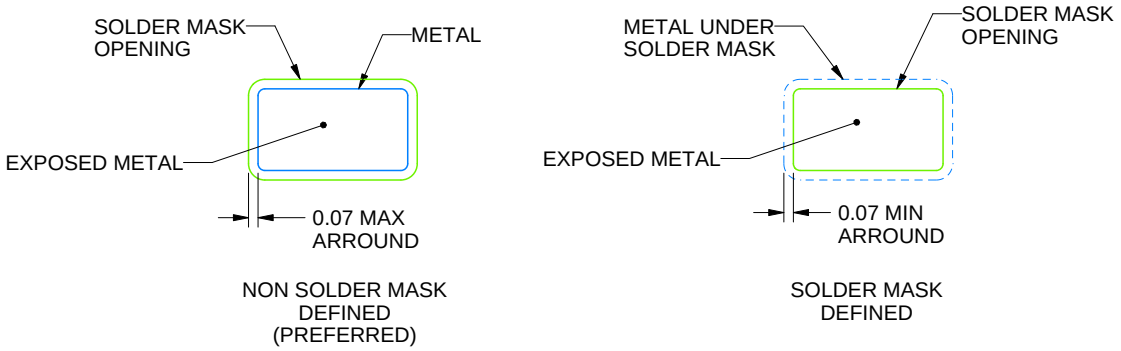

SOLDER MASK DETAILS

4214839/K 08/2024

NOTES: (continued)

6. Publication IPC-7351 may have alternate designs.
7. Solder mask tolerances between and around signal pads can vary based on board fabrication site.

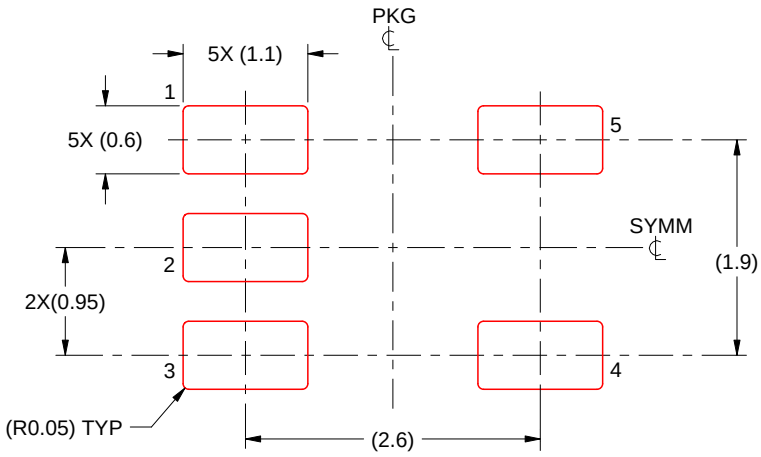

SOLDER PASTE EXAMPLE
BASED ON 0.125 mm THICK STENCIL
SCALE:15X

4214839/K 08/2024

NOTES: (continued)

8. Laser cutting apertures with trapezoidal walls and rounded corners may offer better paste release. IPC-7525 may have alternate design recommendations.
9. Board assembly site may have different recommendations for stencil design.

Images above are just a representation of the package family, actual package may vary.
Refer to the product data sheet for package details.

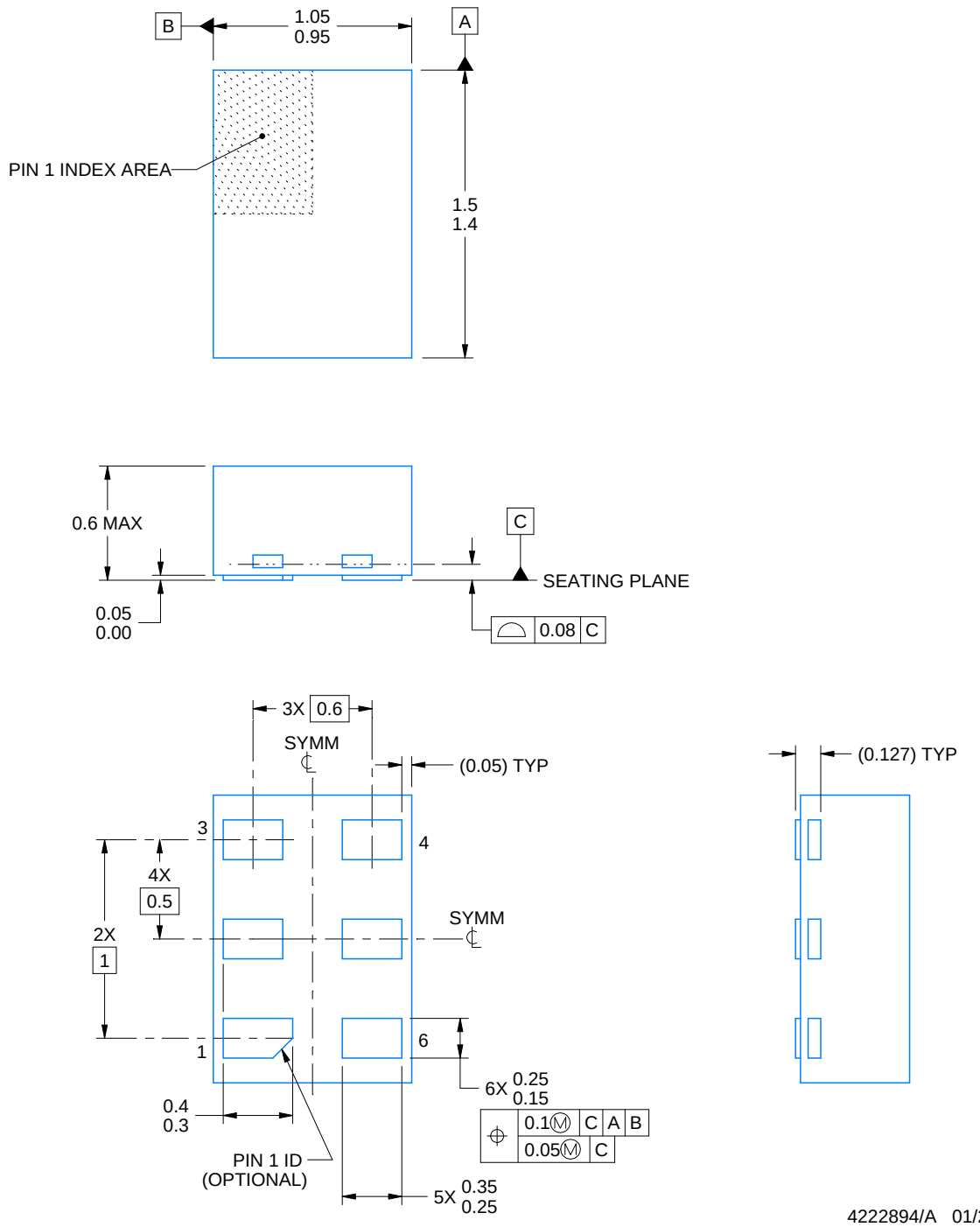

NOTES:

1. All linear dimensions are in millimeters. Any dimensions in parenthesis are for reference only. Dimensioning and tolerancing per ASME Y14.5M.
2. This drawing is subject to change without notice.

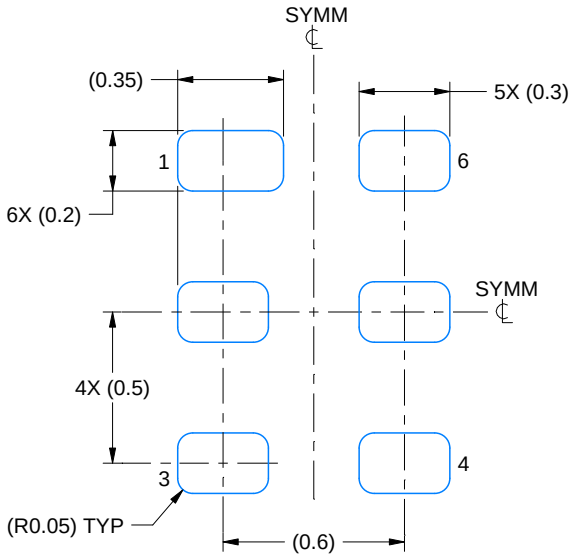

LAND PATTERN EXAMPLE
1:1 RATIO WITH PKG SOLDER PADS
EXPOSED METAL SHOWN
SCALE:40X

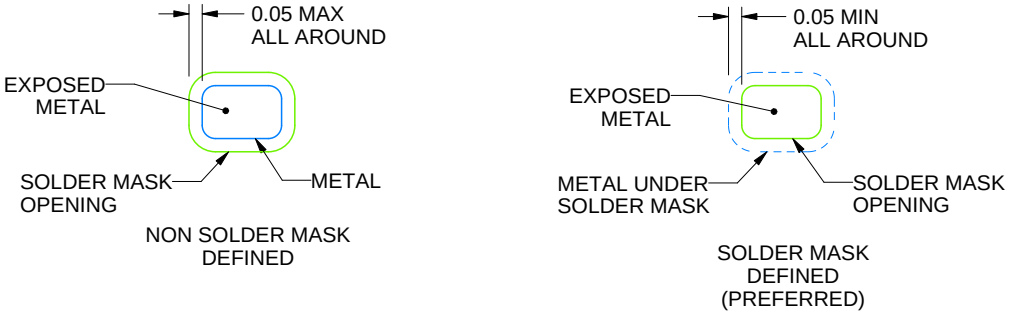

SOLDER MASK DETAILS

4222894/A 01/2018

NOTES: (continued)

3. For more information, see QFN/SON PCB application report in literature No. SLUA271 (www.ti.com/lit/slua271).

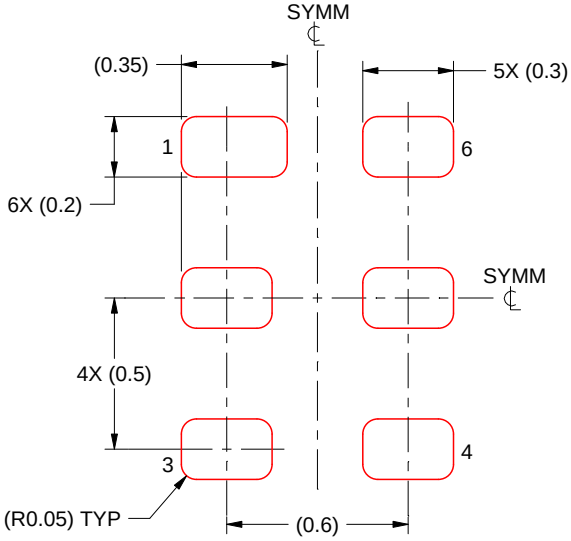

SOLDER PASTE EXAMPLE
BASED ON 0.075 - 0.1 mm THICK STENCIL
SCALE:40X

4222894/A 01/2018

NOTES: (continued)

4. Laser cutting apertures with trapezoidal walls and rounded corners may offer better paste release. IPC-7525 may have alternate design recommendations.

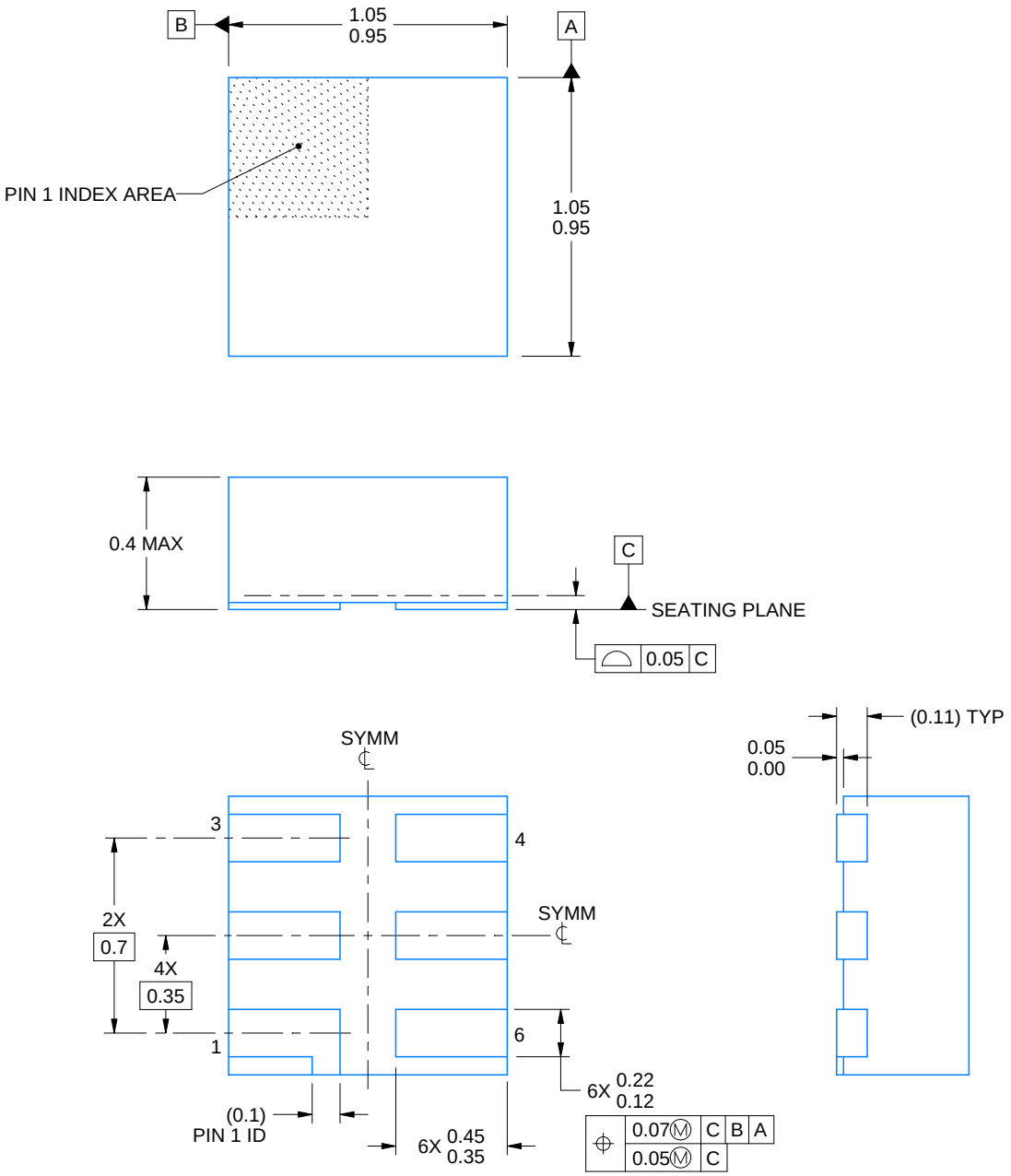

4220597/B 06/2022

NOTES:

1. All linear dimensions are in millimeters. Any dimensions in parenthesis are for reference only. Dimensioning and tolerancing per ASME Y14.5M.
2. This drawing is subject to change without notice.
3. Reference JEDEC registration MO-287, variation X2AAF.

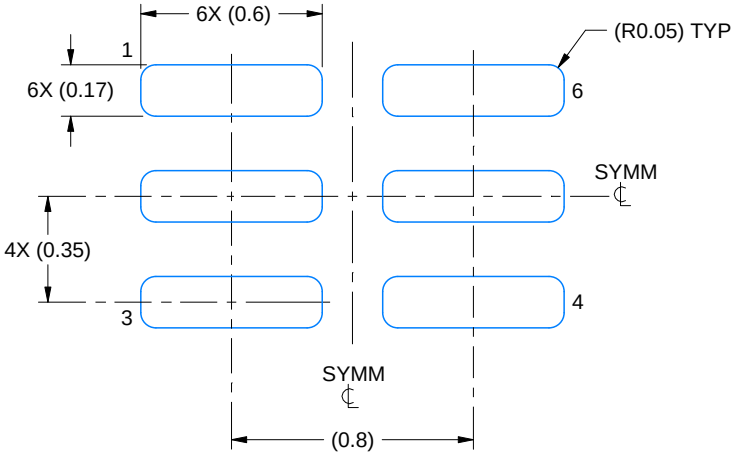

LAND PATTERN EXAMPLE
EXPOSED METAL SHOWN
SCALE:40X

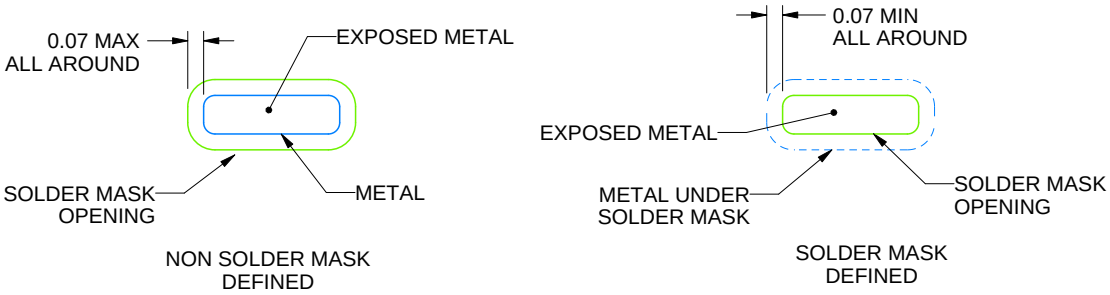

SOLDER MASK DETAILS

4220597/B 06/2022

NOTES: (continued)

4. For more information, see Texas Instruments literature number SLUA271 (www.ti.com/lit/slua271).

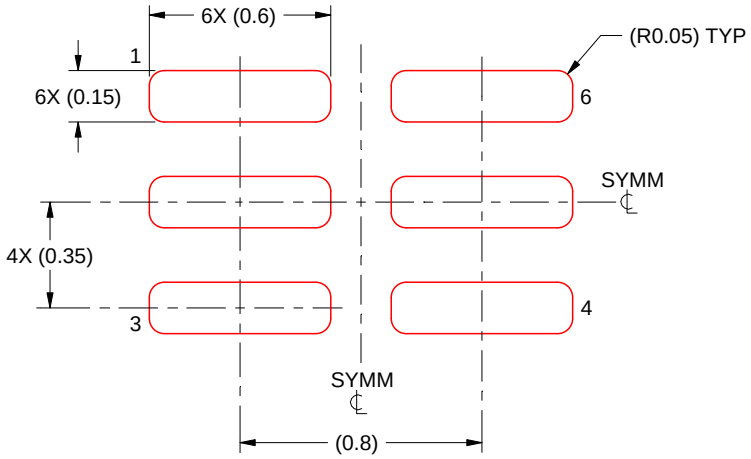

SOLDER PASTE EXAMPLE
BASED ON 0.09 mm THICK STENCIL

PRINTED SOLDER COVERAGE BY AREA UNDER PACKAGE
SCALE:40X

4220597/B 06/2022

4. Laser cutting apertures with trapezoidal walls and rounded corners may offer better paste release. IPC-7525 may have alternate design recommendations.

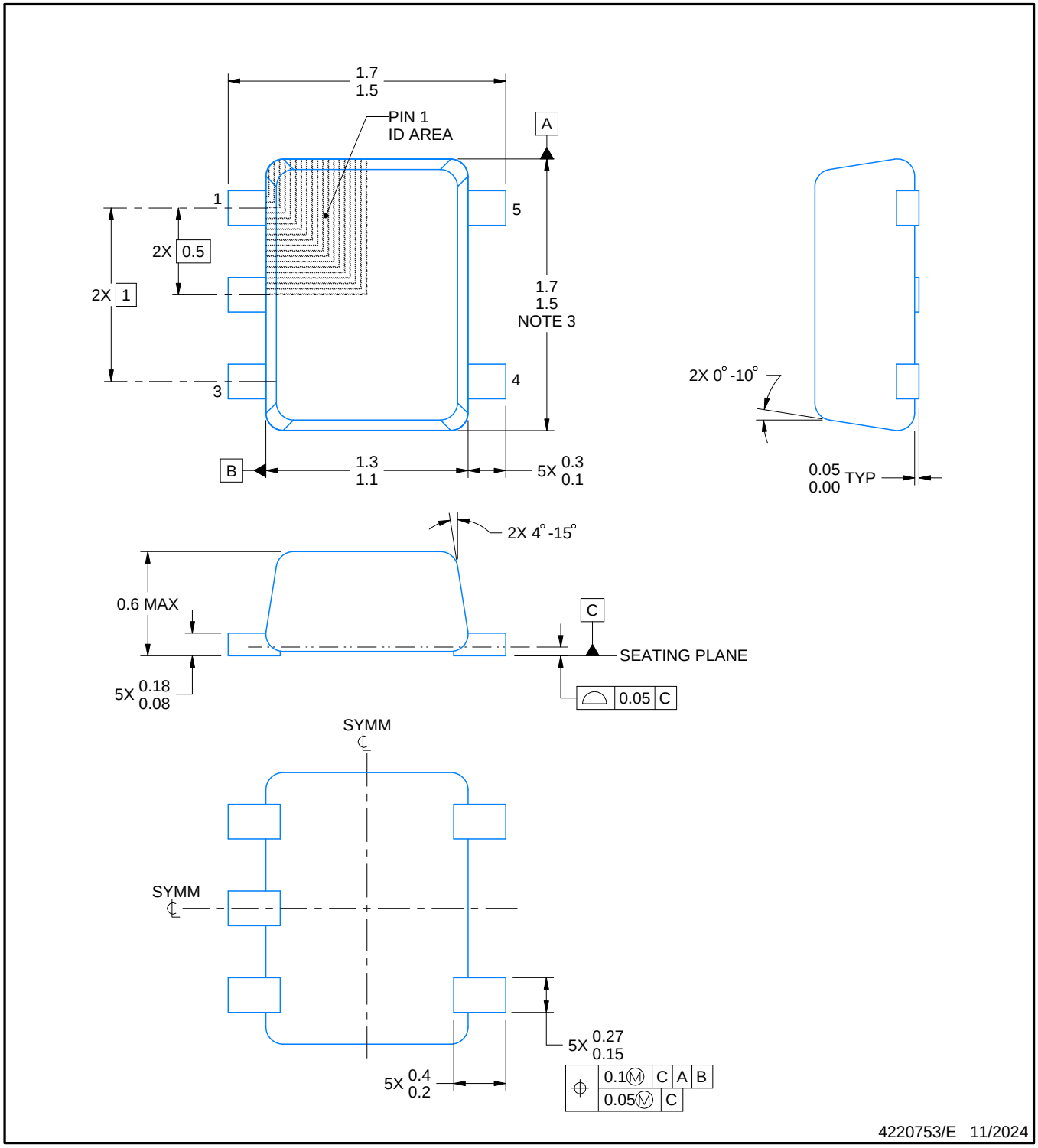

NOTES:

1. All linear dimensions are in millimeters. Any dimensions in parenthesis are for reference only. Dimensioning and tolerancing per ASME Y14.5M.
2. This drawing is subject to change without notice.
3. This dimension does not include mold flash, protrusions, or gate burrs. Mold flash, protrusions, or gate burrs shall not exceed 0.15 mm per side.
4. Reference JEDEC registration MO-293 Variation UAAD-1

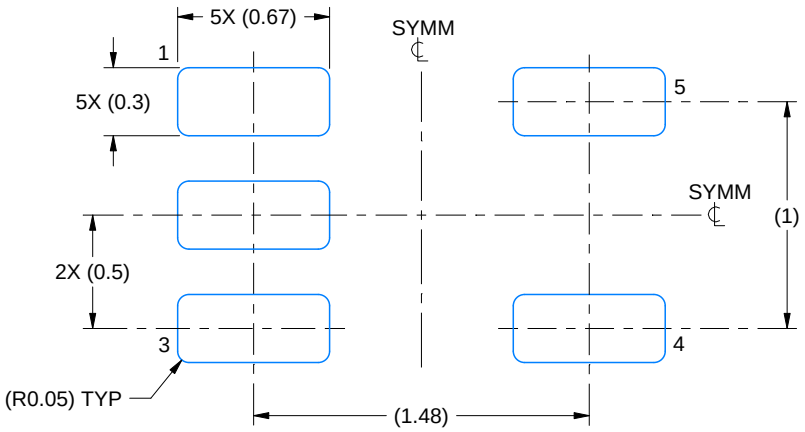

LAND PATTERN EXAMPLE
SCALE:30X

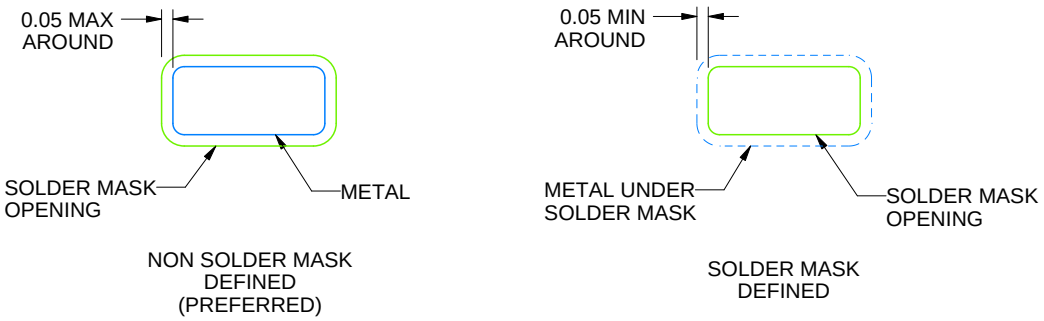

SOLDERMASK DETAILS

4220753/E 11/2024

NOTES: (continued)

5. Publication IPC-7351 may have alternate designs.
6. Solder mask tolerances between and around signal pads can vary based on board fabrication site.

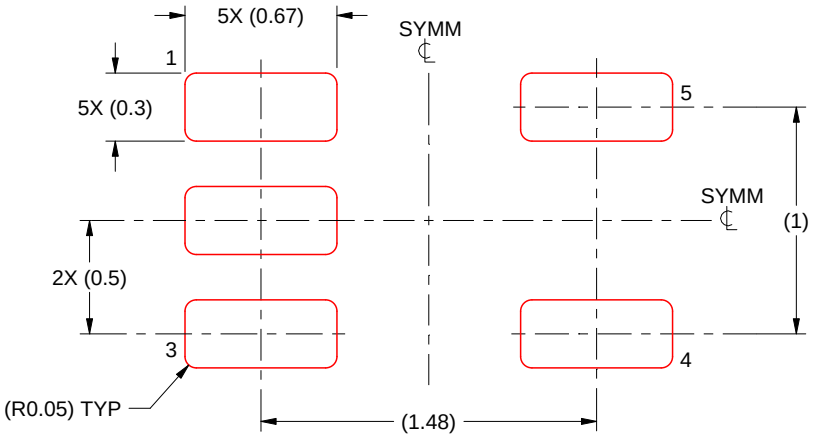

SOLDER PASTE EXAMPLE
BASED ON 0.1 mm THICK STENCIL
SCALE:30X

4220753/E 11/2024

NOTES: (continued)

7. Laser cutting apertures with trapezoidal walls and rounded corners may offer better paste release. IPC-7525 may have alternate design recommendations.
8. Board assembly site may have different recommendations for stencil design.

DPW 5 X2SON - 0.4 mm max height

PLASTIC SMALL OUTLINE - NO LEAD

Images above are just a representation of the package family, actual package may vary.
Refer to the product data sheet for package details.

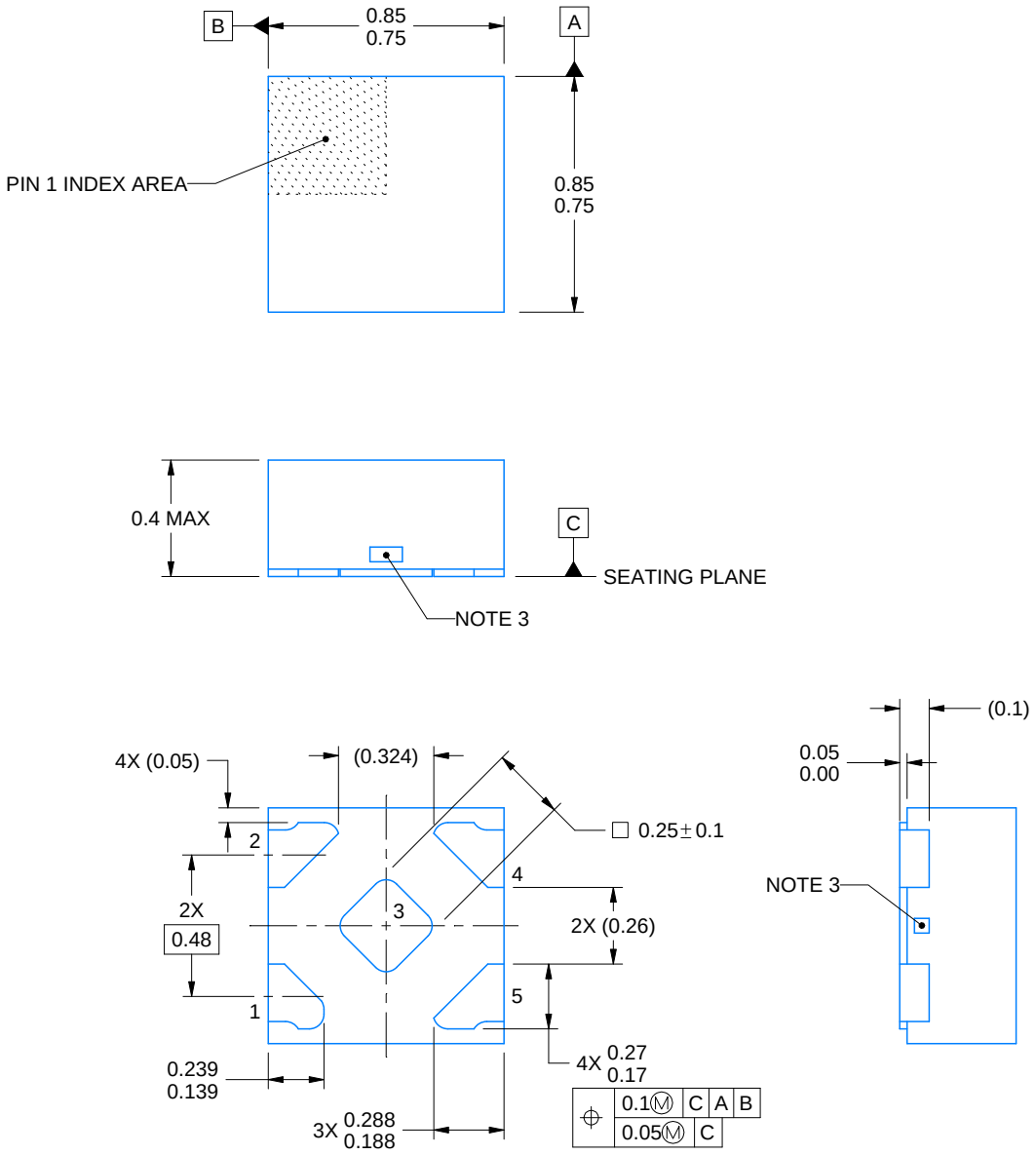

4223102/D 03/2022

NOTES:

1. All linear dimensions are in millimeters. Any dimensions in parenthesis are for reference only. Dimensioning and tolerancing per ASME Y14.5M.
2. This drawing is subject to change without notice.
3. The size and shape of this feature may vary.

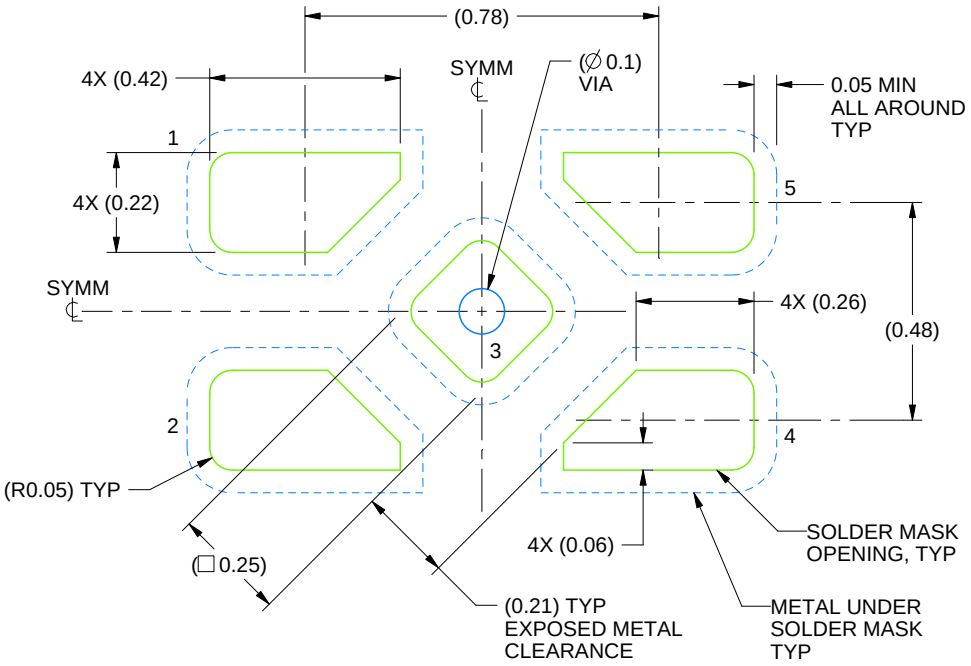

LAND PATTERN EXAMPLE
SOLDER MASK DEFINED
SCALE:60X

4223102/D 03/2022

NOTES: (continued)

4. This package is designed to be soldered to a thermal pad on the board. For more information, refer to QFN/SON PCB application note in literature No. SLUA271 (www.ti.com/lit/slua271).

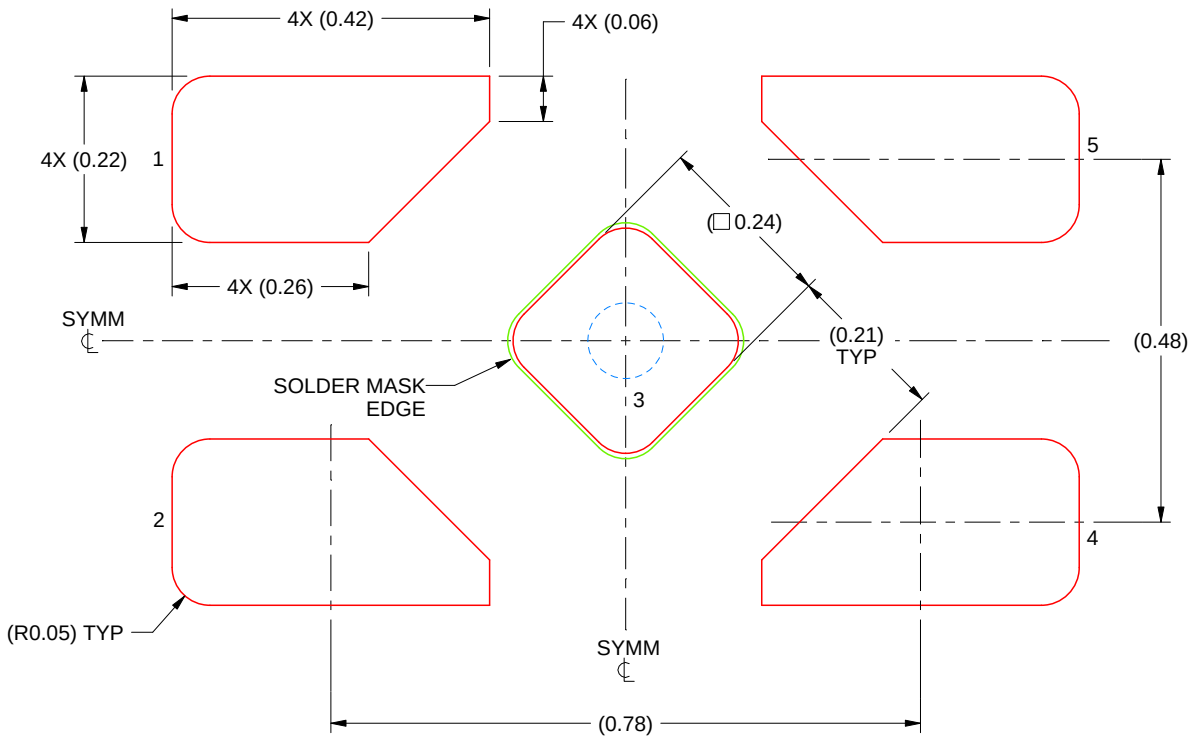

SOLDER PASTE EXAMPLE
BASED ON 0.1 mm THICK STENCIL

EXPOSED PAD 3
92% PRINTED SOLDER COVERAGE BY AREA UNDER PACKAGE
SCALE:100X

4223102/D 03/2022

NOTES: (continued)

5. Laser cutting apertures with trapezoidal walls and rounded corners may offer better paste release. IPC-7525 may have alternate design recommendations.

YEA (R–XBGA–N5) DIE–SIZE BALL GRID ARRAY

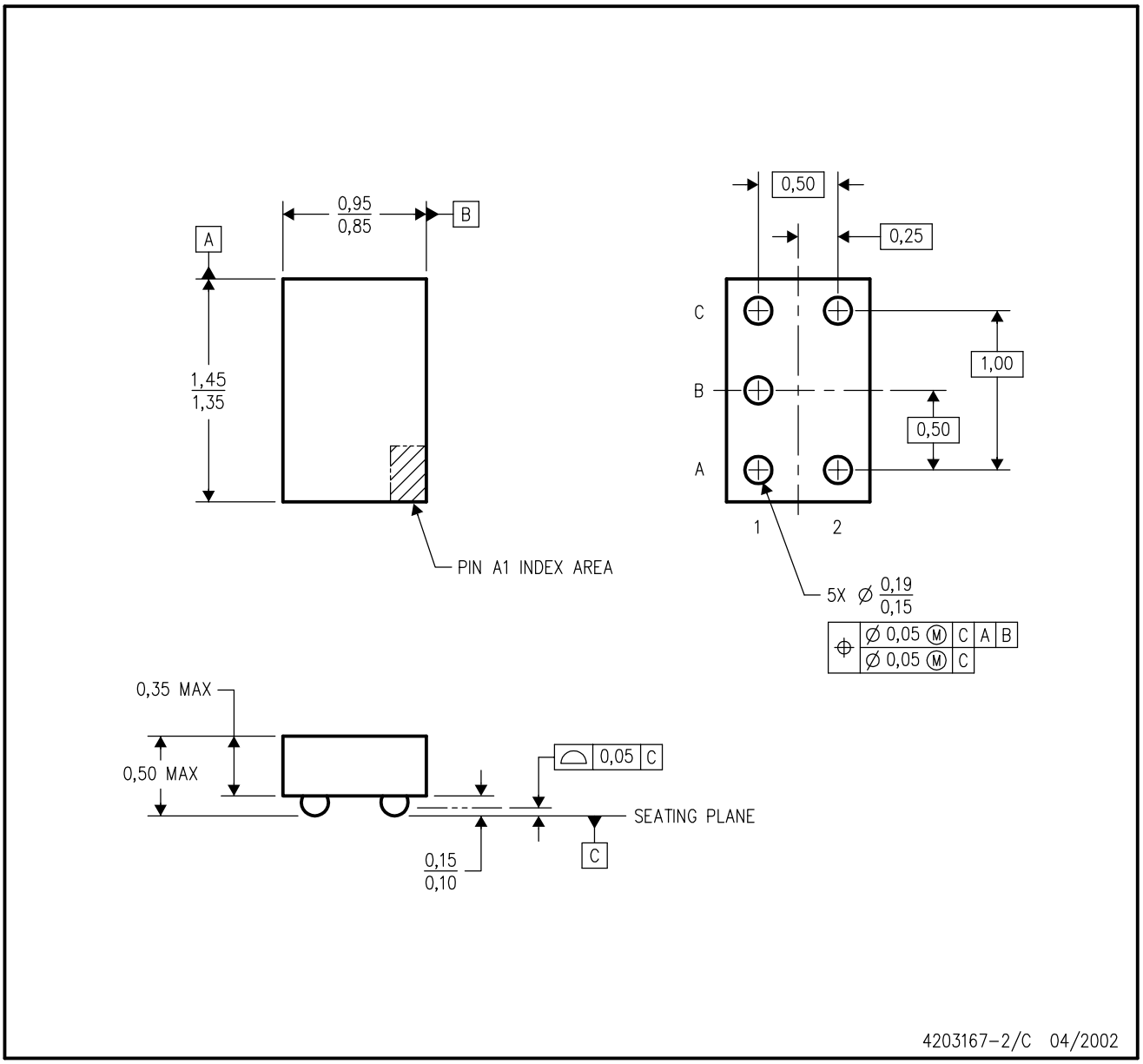

NOTES:
A. All linear dimensions are in millimeters.
B. This drawing is subject to change without notice.
C. NanoStar™ package configuration.
D. Package complies to JEDEC MO–211 variation EA.
E. This package is tin–lead (SnPb). Refer to the 5 YZA package (drawing 4204151) for lead–free.

NanoStar is a trademark of Texas Instruments.

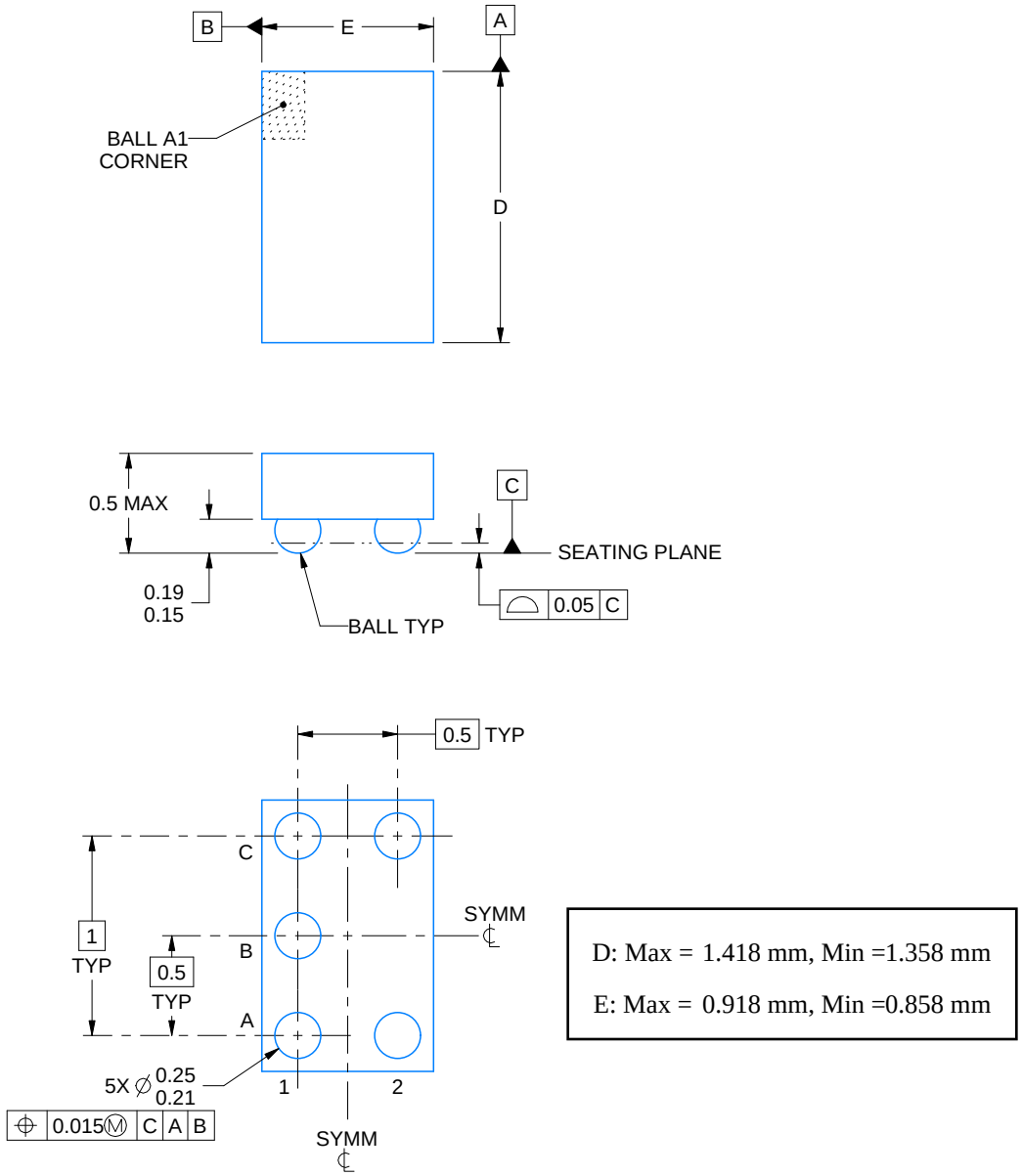

NOTES:

1. All linear dimensions are in millimeters. Any dimensions in parenthesis are for reference only. Dimensioning and tolerancing per ASME Y14.5M.
2. This drawing is subject to change without notice.

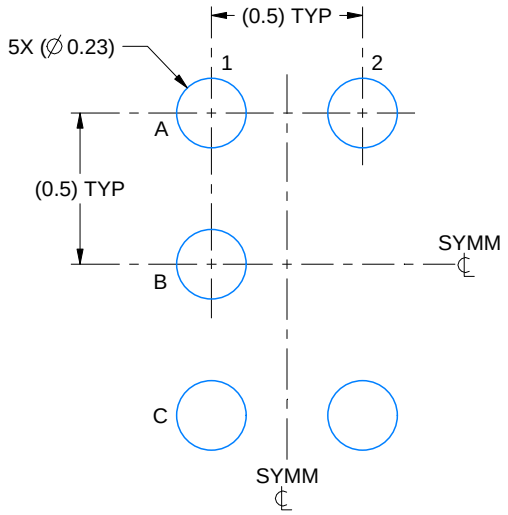

LAND PATTERN EXAMPLE
SCALE:40X

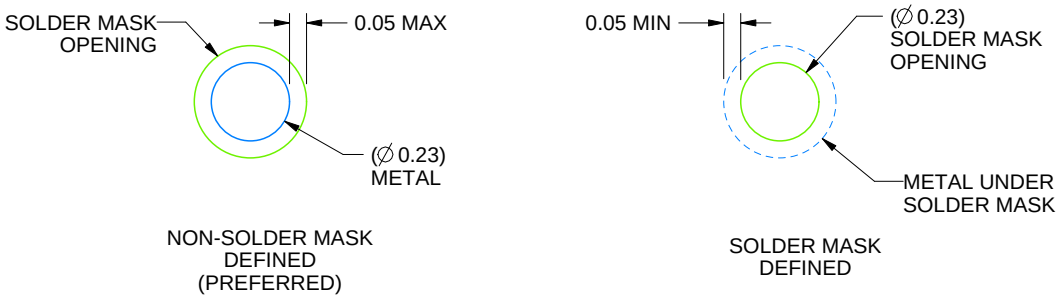

SOLDER MASK DETAILS
NOT TO SCALE

4219492/A 05/2017

NOTES: (continued)

3. Final dimensions may vary due to manufacturing tolerance considerations and also routing constraints. For more information, see Texas Instruments literature number SNVA009 (www.ti.com/lit/snva009).

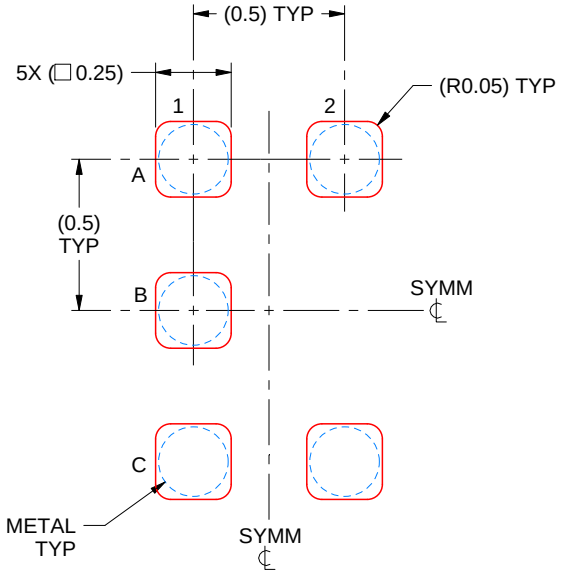

SOLDER PASTE EXAMPLE
BASED ON 0.1 mm THICK STENCIL
SCALE:40X

4219492/A 05/2017

NOTES: (continued)

4. Laser cutting apertures with trapezoidal walls and rounded corners may offer better paste release.

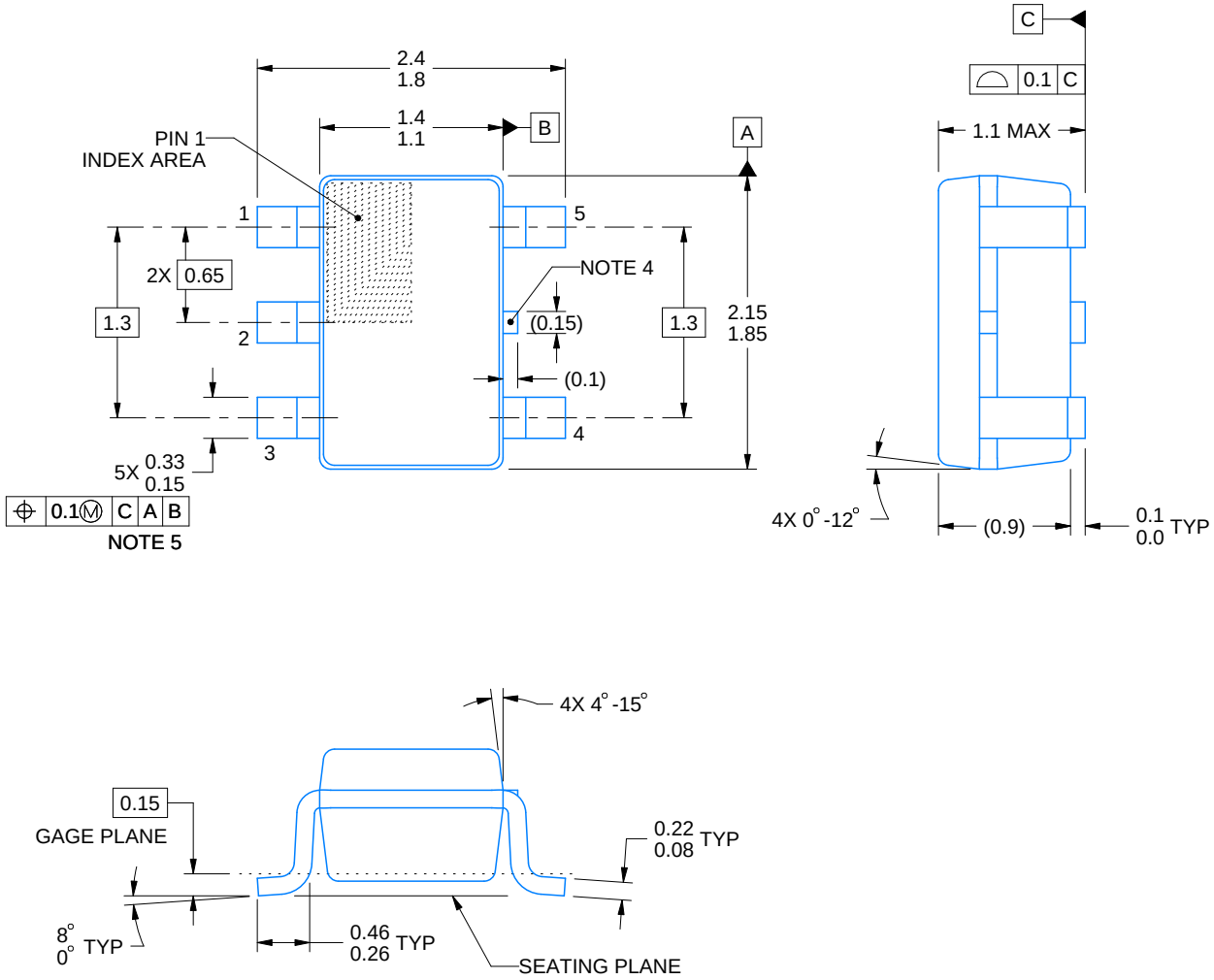

NOTES:

1. All linear dimensions are in millimeters. Any dimensions in parenthesis are for reference only. Dimensioning and tolerancing per ASME Y14.5M.
2. This drawing is subject to change without notice.
3. Refernce JEDEC MO-203.
4. Support pin may differ or may not be present.
5. Lead width does not comply with JEDEC.
6. Body dimensions do not include mold flash, protrusions, or gate burrs. Mold flash, protrusions, or gate burrs shall not exceed 0.25mm per side

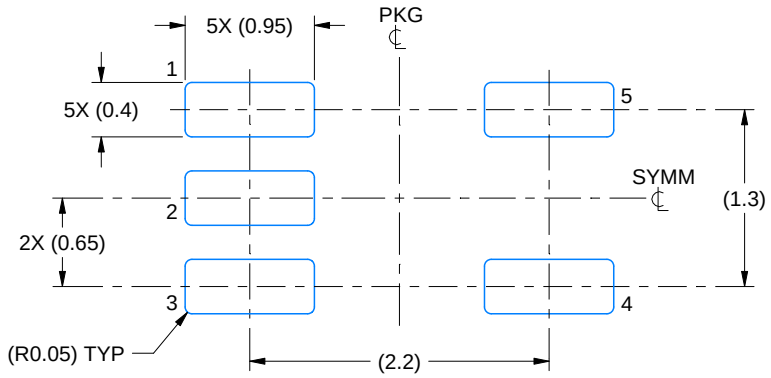

LAND PATTERN EXAMPLE
EXPOSED METAL SHOWN
SCALE:18X

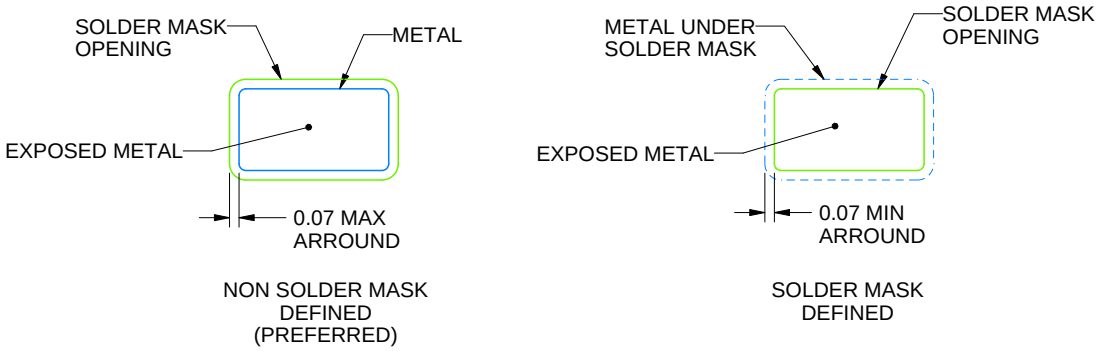

SOLDER MASK DETAILS

4214834/G 11/2024

NOTES: (continued)

7. Publication IPC-7351 may have alternate designs.
8. Solder mask tolerances between and around signal pads can vary based on board fabrication site.

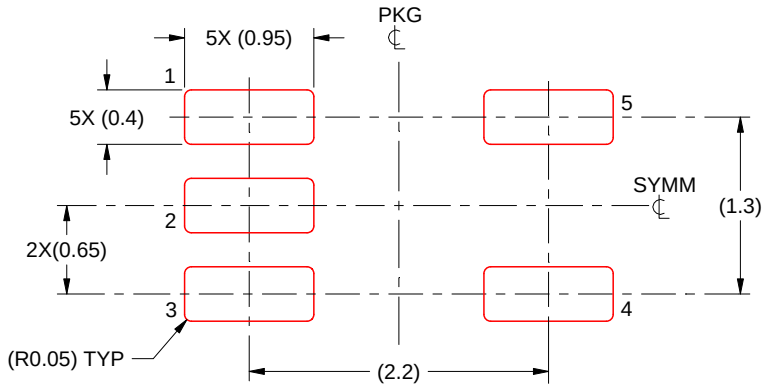

SOLDER PASTE EXAMPLE
BASED ON 0.125 THICK STENCIL
SCALE:18X

4214834/G 11/2024

NOTES: (continued)

9. Laser cutting apertures with trapezoidal walls and rounded corners may offer better paste release. IPC-7525 may have alternate design recommendations.
10. Board assembly site may have different recommendations for stencil design.

YEP (R–XBGA–N5) DIE–SIZE BALL GRID ARRAY

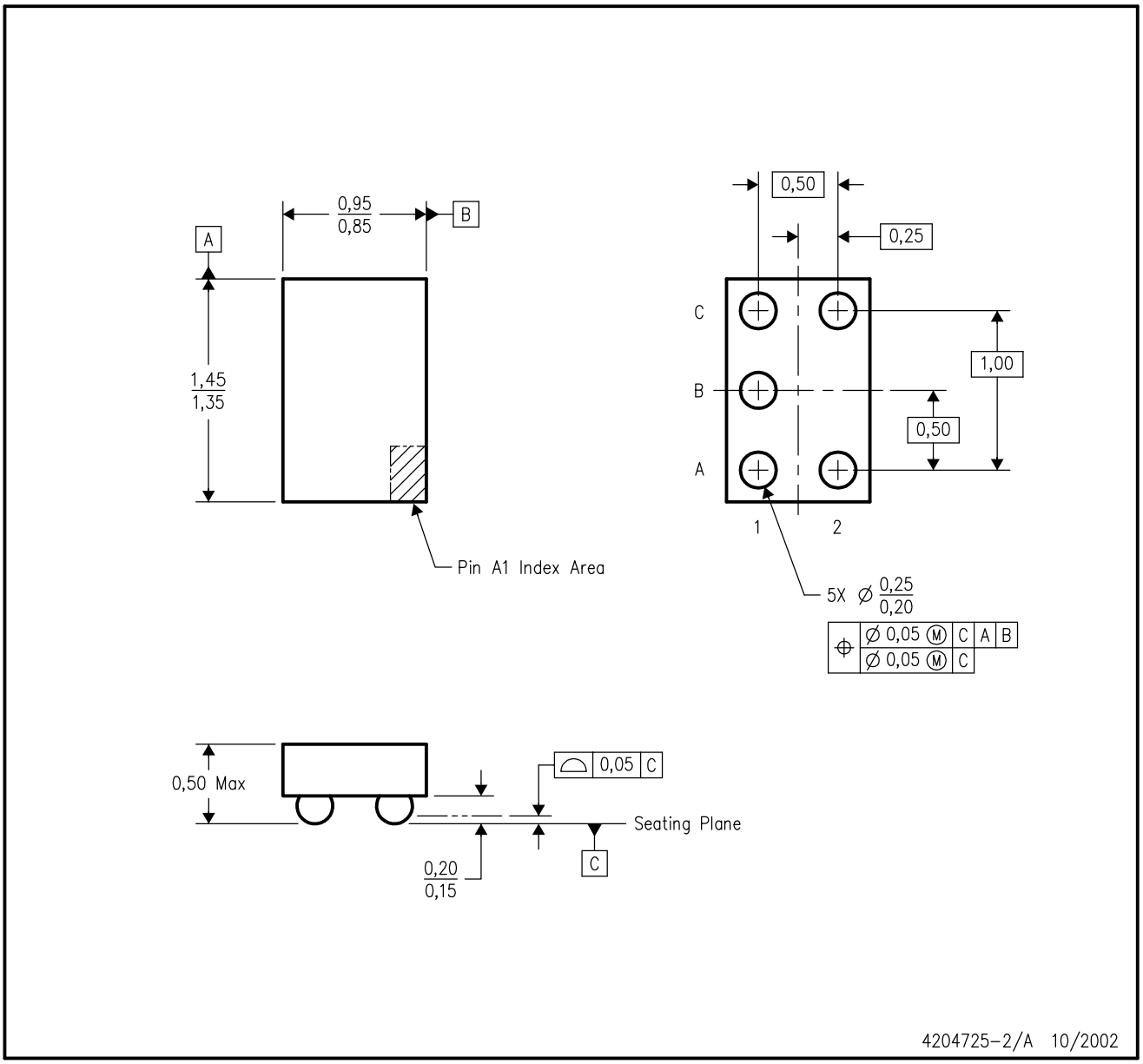

NOTES:
A. All linear dimensions are in millimeters.
B. This drawing is subject to change without notice.
C. NanoStar™ package configuration.
D. This package is tin–lead (SnPb). Refer to the 5 YZP package (drawing 4204741) for lead–free.

NanoStar is a trademark of Texas Instruments.

YZT (R–XBGA–N5) DIE–SIZE BALL GRID ARRAY

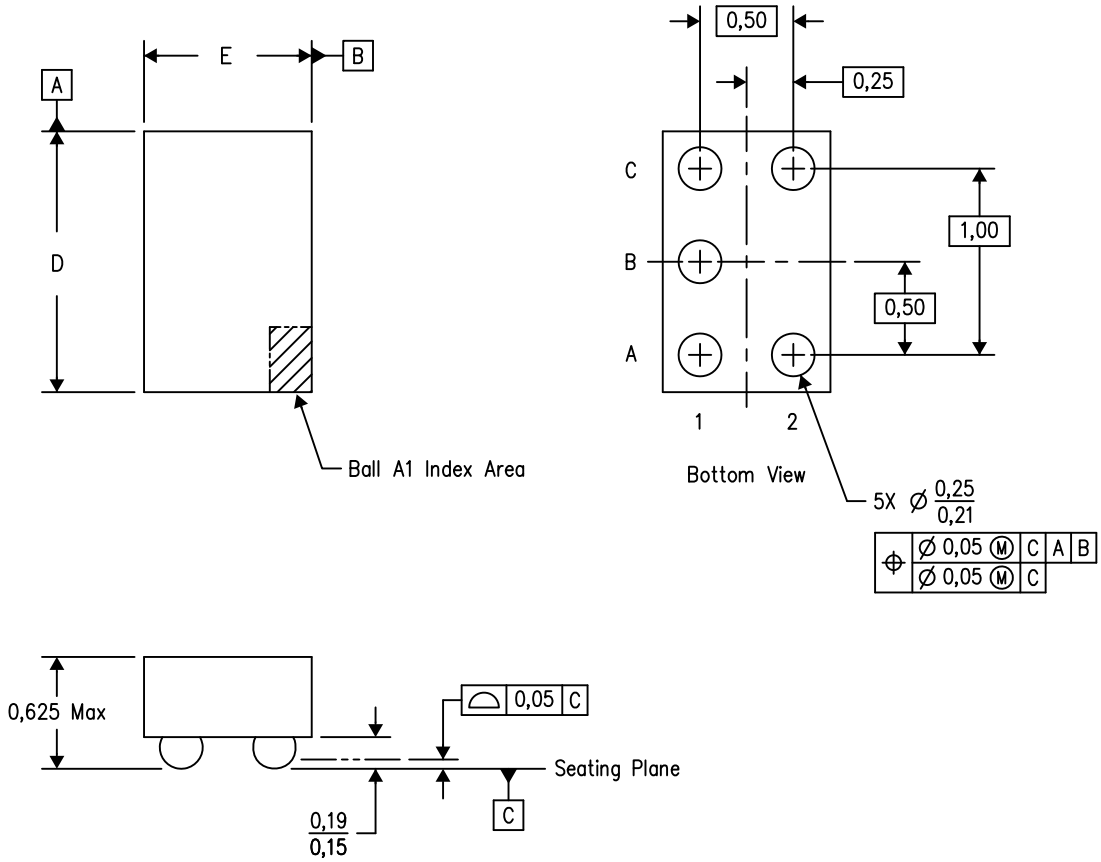

4205418–3/H 05/13

NOTES: A. All linear dimensions are in millimeters. Dimensioning and tolerancing per ASME Y14.5M–1994.
B. This drawing is subject to change without notice.
C. NanoFree™ package configuration.

NanoFree is a trademark of Texas Instruments.

YZA (R–XBGA–N5) DIE–SIZE BALL GRID ARRAY

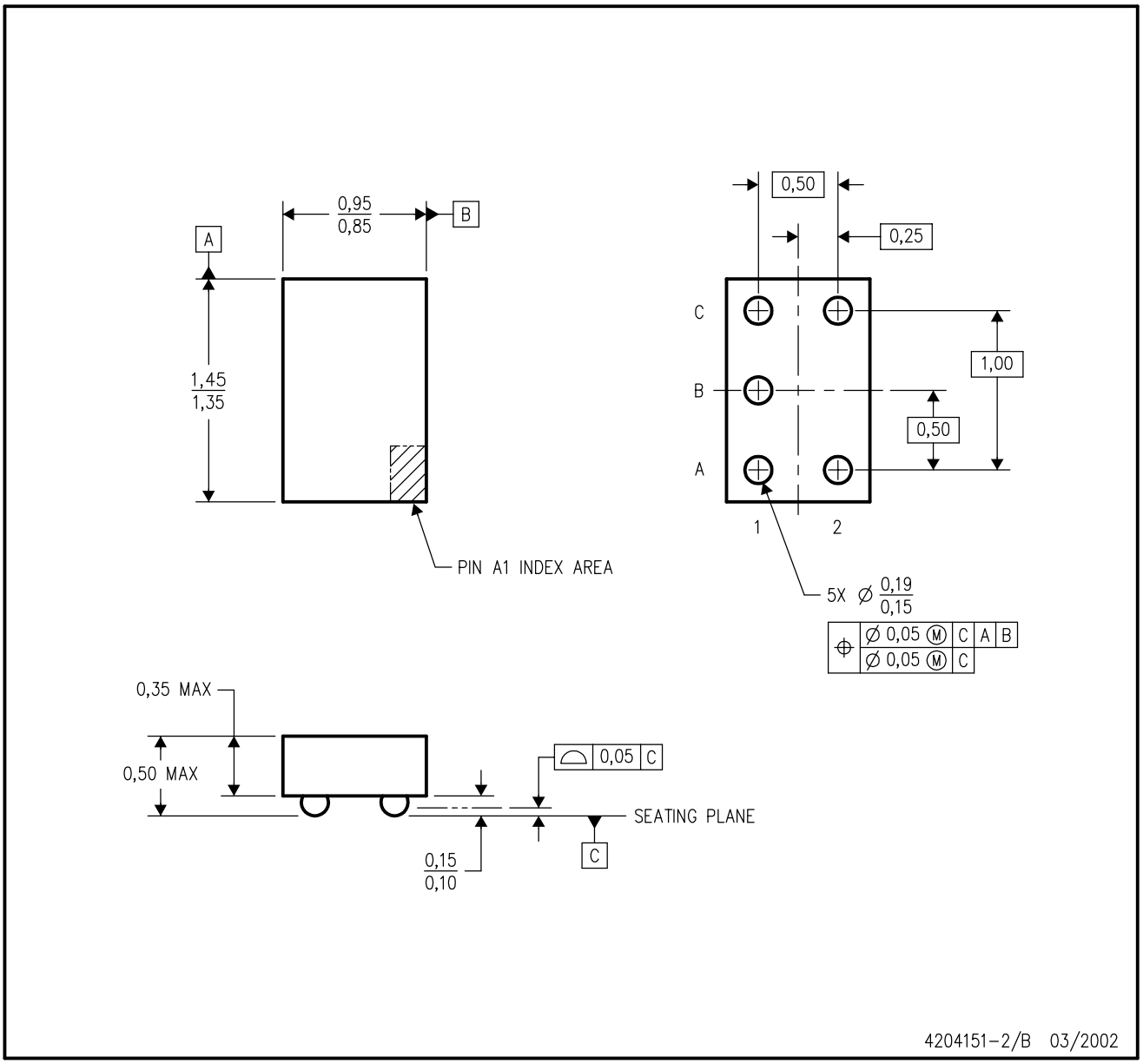

NOTES:
A. All linear dimensions are in millimeters.
B. This drawing is subject to change without notice.
C. NanoFree™ package configuration.
D. Package complies to JEDEC MO–211 variation EA.
E. This package is lead–free. Refer to the 5 YEA package (drawing 4203167) for tin–lead (SnPb).

NanoFree is a trademark of Texas Instruments.

IMPORTANT NOTICE AND DISCLAIMER

TI PROVIDES TECHNICAL AND RELIABILITY DATA (INCLUDING DATA SHEETS), DESIGN RESOURCES (INCLUDING REFERENCE DESIGNS), APPLICATION OR OTHER DESIGN ADVICE, WEB TOOLS, SAFETY INFORMATION, AND OTHER RESOURCES “AS IS” AND WITH ALL FAULTS, AND DISCLAIMS ALL WARRANTIES, EXPRESS AND IMPLIED, INCLUDING WITHOUT LIMITATION ANY IMPLIED WARRANTIES OF MERCHANTABILITY, FITNESS FOR A PARTICULAR PURPOSE OR NON-INFRINGEMENT OF THIRD PARTY INTELLECTUAL PROPERTY RIGHTS.

These resources are intended for skilled developers designing with TI products. You are solely responsible for (1) selecting the appropriate TI products for your application, (2) designing, validating and testing your application, and (3) ensuring your application meets applicable standards, and any other safety, security, regulatory or other requirements.

These resources are subject to change without notice. TI grants you permission to use these resources only for development of an application that uses the TI products described in the resource. Other reproduction and display of these resources is prohibited. No license is granted to any other TI intellectual property right or to any third party intellectual property right. TI disclaims responsibility for, and you will fully indemnify TI and its representatives against, any claims, damages, costs, losses, and liabilities arising out of your use of these resources.

TI’s products are provided subject to TI’s Terms of Sale or other applicable terms available either on ti.com or provided in conjunction with such TI products. TI’s provision of these resources does not expand or otherwise alter TI’s applicable warranties or warranty disclaimers for TI products.

TI objects to and rejects any additional or different terms you may have proposed.

Mailing Address: Texas Instruments, Post Office Box 655303, Dallas, Texas 75265
Copyright © 2025, Texas Instruments Incorporated