- **Wide Operating Voltage Range of 2 V to 6 V**
- **High-Current Inverting Outputs Drive Up To 15 LSTTL Loads**
- **Low Power Consumption, 80-μA Max $I_{CC}$**
- **'HC257 . . . Typical $t_{pd}$ = 9 ns**
- **'HC258 . . . Typical $t_{pd}$ = 12 ns**
- **±6-mA Output Drive at 5 V**
- **Low Input Current of 1 μA Max**
- **Provides Bus Interface from Multiple Sources in High-Performance Systems**

**SN54HC257, SN54HC258 . . . J PACKAGE**
**SN74HC257, SN74HC258 . . . D, N, NS, OR PW PACKAGE**
**(TOP VIEW)**

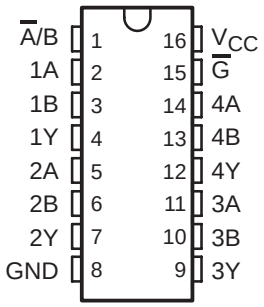


**SN54HC257, SN54HC258 . . . FK PACKAGE**
**(TOP VIEW)**

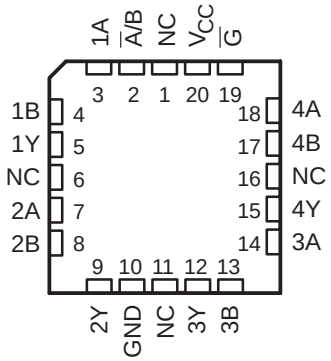


NC − No internal connection

## description/ordering information

### ORDERING INFORMATION

| $T_A$ | PACKAGE† | | ORDERABLE PART NUMBER | TOP-SIDE MARKING |
|---|---|---|---|---|
| −40°C to 85°C | PDIP − N | Tube of 25 | SN74HC257N | SN74HC257N |
| | | | SN74HC258N | SN74HC258N |
| | SOIC − D | Tube of 40 | SN74HC257D | HC257 |
| | | Reel of 2500 | SN74HC257DR | |
| | | Reel of 250 | SN74HC257DT | |
| | | Tube of 40 | SN74HC258D | HC258 |
| | | Reel of 2500 | SN74HC258DR | |
| | SOP − NS | Reel of 2000 | SN74HC257NSR | HC257 |
| | | | SN74HC258NSR | HC258 |
| | TSSOP − PW | Tube of 90 | SN74HC257PW | HC257 |
| | | Reel of 2000 | SN74HC257PWR | |
| | | Reel of 250 | SN74HC257PWT | |
| | | Tube of 90 | SN74HC258PW | HC258 |
| | | Reel of 2000 | SN74HC258PWR | |
| | | Reel of 250 | SN74HC258PWT | |
| −55°C to 125°C | CDIP − J | Tube of 25 | SNJ54HC257J | SNJ54HC257J |
| | | | SNJ54HC258J | SNJ54HC258J |
| | LCCC − FK | Tube of 55 | SNJ54HC257FK | SNJ54HC257FK |
| | | | SNJ54HC258FK | SNJ54HC258FK |

† Package drawings, standard packing quantities, thermal data, symbolization, and PCB design guidelines are available at www.ti.com/sc/package.

Please be aware that an important notice concerning availability, standard warranty, and use in critical applications of Texas Instruments semiconductor products and disclaimers thereto appears at the end of this data sheet.

PRODUCTION DATA information is current as of publication date. Products conform to specifications per the terms of Texas Instruments standard warranty. Production processing does not necessarily include testing of all parameters.

Copyright © 2003, Texas Instruments Incorporated
On products compliant to MIL-PRF-38535, all parameters are tested unless otherwise noted. On all other products, production processing does not necessarily include testing of all parameters.

## description/ordering information (continued)

These devices are designed to multiplex signals from 4-bit data sources to 4-output data lines in bus-organized systems. The 3-state outputs do not load the data lines when the output-enable ($\overline{G}$) input is at a high logic level.

To ensure the high-impedance state during power up or power down, $\overline{G}$ should be tied to $V_{CC}$ through a pullup resistor; the minimum value of the resistor is determined by the current-sinking capability of the driver.

**FUNCTION TABLE**

| INPUTS | | | | OUTPUT Y | |
|---|---|---|---|---|---|
| $\overline{G}$ | $\overline{A}$/B | A | B | 'HC257 | 'HC258 |
| H | X | X | X | Z | Z |
| L | L | L | X | L | H |
| L | L | H | X | H | L |
| L | H | X | L | L | H |
| L | H | X | H | H | L |

## 'HC257 logic diagram (positive logic)

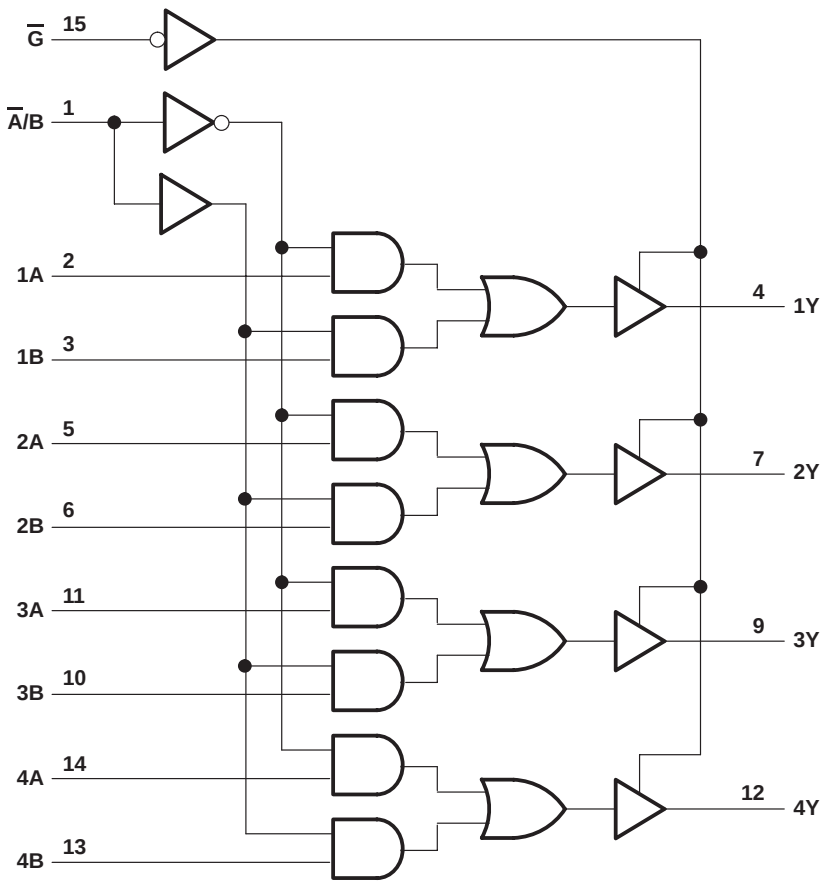


Pin numbers shown are for the D, J, N, NS, and PW packages.

## ’HC258 logic diagram (positive logic)

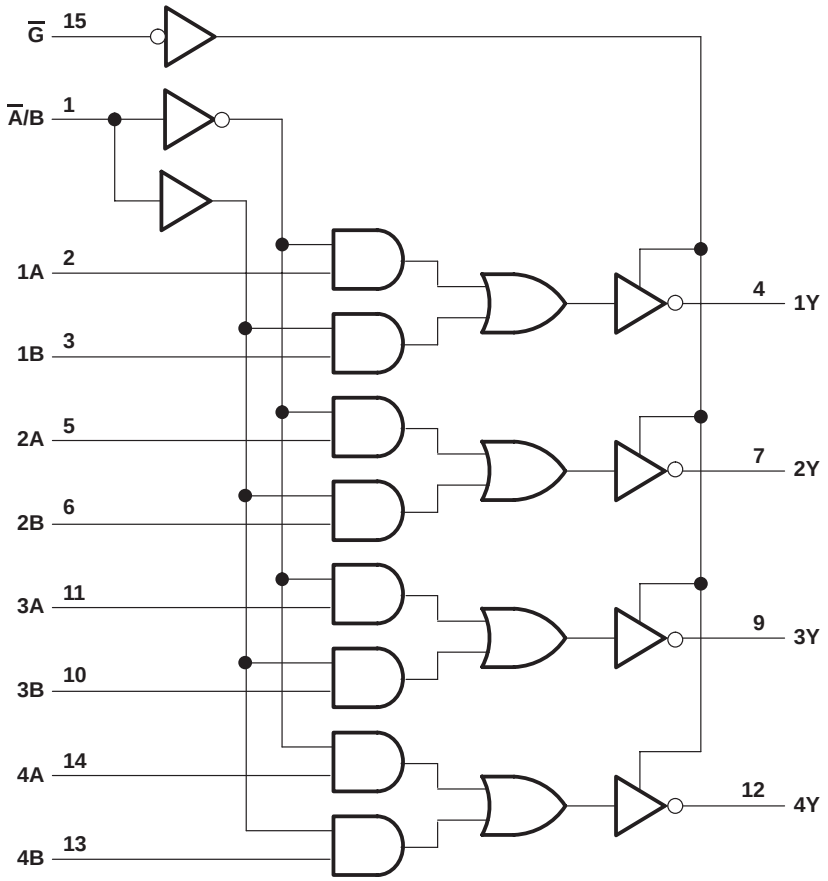


Pin numbers shown are for the D, J, N, NS, and PW packages.

## absolute maximum ratings over operating free-air temperature range (unless otherwise noted)†

| | |
|---|---|
| Supply voltage range, $V_{CC}$ | −0.5 V to 7 V |
| Input clamp current, $I_{IK}$ ($V_I < 0$ or $V_I > V_{CC}$) | ±20 mA |
| Output clamp current, $I_{OK}$ ($V_O < 0$ or $V_O > V_{CC}$) | ±20 mA |
| Continuous output current, $I_O$ ($V_O = 0$ to $V_{CC}$) | ±35 mA |
| Continuous current through $V_{CC}$ or GND | ±70 mA |
| Package thermal impedance, $\theta_{JA}$ (see Note 1): D package | 73°C/W |
| N package | 67°C/W |
| NS package | 64°C/W |
| PW package | 108°C/W |
| Storage temperature range, $T_{stg}$ | −65°C to 150°C |

† Stresses beyond those listed under “absolute maximum ratings” may cause permanent damage to the device. These are stress ratings only, and functional operation of the device at these or any other conditions beyond those indicated under “recommended operating conditions” is not implied. Exposure to absolute-maximum-rated conditions for extended periods may affect device reliability.

NOTE 1: The package thermal impedance is calculated in accordance with JESD 51-7.

## recommended operating conditions (see Note 2)

| | | | SN54HC257, SN54HC258 | | | SN74HC257, SN74HC258 | | | UNIT |
|---|---|---|---|---|---|---|---|---|---|
| | | | MIN | NOM | MAX | MIN | NOM | MAX | |
| $V_{CC}$ | Supply voltage | | 2 | 5 | 6 | 2 | 5 | 6 | V |
| $V_{IH}$ | High-level input voltage | $V_{CC}$ = 2 V | 1.5 | | | 1.5 | | | V |
| | | $V_{CC}$ = 4.5 V | 3.15 | | | 3.15 | | | |
| | | $V_{CC}$ = 6 V | 4.2 | | | 4.2 | | | |
| $V_{IL}$ | Low-level input voltage | $V_{CC}$ = 2 V | | | 0.3 | | | 0.5 | V |
| | | $V_{CC}$ = 4.5 V | | | 0.9 | | | 1.35 | |
| | | $V_{CC}$ = 6 V | | | 1.2 | | | 1.8 | |
| $V_I$ | Input voltage | | 0 | | $V_{CC}$ | 0 | | $V_{CC}$ | V |
| $V_O$ | Output voltage | | 0 | | $V_{CC}$ | 0 | | $V_{CC}$ | V |
| $\Delta t/\Delta v$ | Input transition rise/fall time | $V_{CC}$ = 2 V | | | 1000 | | | 1000 | ns |
| | | $V_{CC}$ = 4.5 V | | | 500 | | | 500 | |
| | | $V_{CC}$ = 6 V | | | 400 | | | 400 | |
| $T_A$ | Operating free-air temperature | | −55 | | 125 | −40 | | 85 | °C |

NOTE 2: All unused inputs of the device must be held at $V_{CC}$ or GND to ensure proper device operation. Refer to the TI application report, *Implications of Slow or Floating CMOS Inputs*, literature number SCBA004.

## electrical characteristics over recommended operating free-air temperature range (unless otherwise noted)

| PARAMETER | TEST CONDITIONS | | $V_{CC}$ | $T_A$ = 25°C | | | SN54HC257, SN54HC258 | | SN74HC257, SN74HC258 | | UNIT |
|---|---|---|---|---|---|---|---|---|---|---|---|
| | | | | MIN | TYP | MAX | MIN | MAX | MIN | MAX | |
| $V_{OH}$ | $V_I = V_{IH}$ or $V_{IL}$ | $I_{OH}$ = −20 µA | 2 V | 1.9 | 1.998 | | 1.9 | | 1.9 | | V |
| | | | 4.5 V | 4.4 | 4.499 | | 4.4 | | 4.4 | | |
| | | | 6 V | 5.9 | 5.999 | | 5.9 | | 5.9 | | |
| | | $I_{OH}$ = −6 mA | 4.5 V | 3.98 | 4.3 | | 3.7 | | 3.84 | | |
| | | $I_{OH}$ = −7.8 mA | 6 V | 5.48 | 5.8 | | 5.2 | | 5.34 | | |
| $V_{OL}$ | $V_I = V_{IH}$ or $V_{IL}$ | $I_{OL}$ = 20 µA | 2 V | | 0.002 | 0.1 | | 0.1 | | 0.1 | V |
| | | | 4.5 V | | 0.001 | 0.1 | | 0.1 | | 0.1 | |
| | | | 6 V | | 0.001 | 0.1 | | 0.1 | | 0.1 | |
| | | $I_{OL}$ = 6 mA | 4.5 V | | 0.17 | 0.26 | | 0.4 | | 0.33 | |
| | | $I_{OL}$ = 7.8 mA | 6 V | | 0.15 | 0.26 | | 0.4 | | 0.33 | |
| $I_I$ | $V_I = V_{CC}$ or 0 | | 6 V | | ±0.1 | ±100 | | ±1000 | | ±1000 | nA |
| $I_{OZ}$ | $V_O = V_{CC}$ or 0 | | 6 V | | ±0.01 | ±0.5 | | ±10 | | ±5 | µA |
| $I_{CC}$ | $V_I = V_{CC}$ or 0, | $I_O$ = 0 | 6 V | | | 8 | | 160 | | 80 | µA |
| $C_i$ | | | 2 V to 6 V | | 3 | 10 | | 10 | | 10 | pF |

**switching characteristics over recommended operating free-air temperature range, $C_L$ = 50 pF (unless otherwise noted) (see Figure 1)**

| PARAMETER | FROM (INPUT) | TO (OUTPUT) | $V_{CC}$ | $T_A$ = 25°C | | | SN54HC257 | | SN74HC257 | | UNIT |
|---|---|---|---|---|---|---|---|---|---|---|---|
| | | | | MIN | TYP | MAX | MIN | MAX | MIN | MAX | |
| $t_{pd}$ | A or B | Any Y | 2 V | | 50 | 100 | | 150 | | 125 | ns |
| | | | 4.5 V | | 10 | 20 | | 30 | | 25 | |
| | | | 6 V | | 9 | 17 | | 25 | | 21 | |
| | $\overline{A}$/B | Any Y | 2 V | | 50 | 100 | | 150 | | 125 | |
| | | | 4.5 V | | 10 | 20 | | 30 | | 25 | |
| | | | 6 V | | 9 | 17 | | 25 | | 21 | |
| $t_{en}$ | $\overline{G}$ | Any Y | 2 V | | 75 | 150 | | 225 | | 190 | ns |
| | | | 4.5 V | | 15 | 30 | | 45 | | 38 | |
| | | | 6 V | | 13 | 26 | | 38 | | 32 | |
| $t_{dis}$ | $\overline{G}$ | Any Y | 2 V | | 75 | 150 | | 225 | | 190 | ns |
| | | | 4.5 V | | 15 | 30 | | 45 | | 38 | |
| | | | 6 V | | 13 | 26 | | 38 | | 32 | |
| $t_t$ | | Any Y | 2 V | | 28 | 60 | | 90 | | 75 | ns |
| | | | 4.5 V | | 8 | 12 | | 18 | | 15 | |
| | | | 6 V | | 6 | 10 | | 15 | | 13 | |

**switching characteristics over recommended operating free-air temperature range, $C_L$ = 150 pF (unless otherwise noted) (see Figure 1)**

| PARAMETER | FROM (INPUT) | TO (OUTPUT) | $V_{CC}$ | $T_A$ = 25°C | | | SN54HC257 | | SN74HC257 | | UNIT |
|---|---|---|---|---|---|---|---|---|---|---|---|
| | | | | MIN | TYP | MAX | MIN | MAX | MIN | MAX | |
| $t_{pd}$ | A or B | Any Y | 2 V | | 75 | 150 | | 245 | | 190 | ns |
| | | | 4.5 V | | 15 | 30 | | 45 | | 38 | |
| | | | 6 V | | 13 | 26 | | 38 | | 32 | |
| | $\overline{A}$/B | Any Y | 2 V | | 75 | 150 | | 245 | | 190 | |
| | | | 4.5 V | | 15 | 30 | | 45 | | 38 | |
| | | | 6 V | | 13 | 26 | | 38 | | 32 | |
| $t_{en}$ | $\overline{G}$ | Any Y | 2 V | | 100 | 200 | | 300 | | 250 | ns |
| | | | 4.5 V | | 24 | 40 | | 60 | | 50 | |
| | | | 6 V | | 18 | 34 | | 51 | | 43 | |
| $t_t$ | | Any Y | 2 V | | 45 | 210 | | 315 | | 265 | ns |
| | | | 4.5 V | | 17 | 42 | | 63 | | 53 | |
| | | | 6 V | | 13 | 36 | | 53 | | 45 | |

## switching characteristics over recommended operating free-air temperature range, $C_L$ = 50 pF (unless otherwise noted) (see Figure 1)

| PARAMETER | FROM (INPUT) | TO (OUTPUT) | $V_{CC}$ | $T_A$ = 25°C | | | SN54HC258 | | SN74HC258 | | UNIT |
|---|---|---|---|---|---|---|---|---|---|---|---|
| | | | | MIN | TYP | MAX | MIN | MAX | MIN | MAX | |
| $t_{pd}$ | A or B | Any Y | 2 V | | 60 | 100 | | 150 | | 125 | ns |
| | | | 4.5 V | | 13 | 20 | | 30 | | 25 | |
| | | | 6 V | | 12 | 17 | | 25 | | 21 | |
| | $\overline{A}$/B | Any Y | 2 V | | 60 | 115 | | 175 | | 145 | |
| | | | 4.5 V | | 13 | 23 | | 35 | | 29 | |
| | | | 6 V | | 12 | 20 | | 30 | | 25 | |
| $t_{en}$ | $\overline{G}$ | Any Y | 2 V | | 70 | 150 | | 225 | | 190 | ns |
| | | | 4.5 V | | 15 | 30 | | 45 | | 38 | |
| | | | 6 V | | 13 | 26 | | 38 | | 32 | |
| $t_{dis}$ | $\overline{G}$ | Any Y | 2 V | | 75 | 150 | | 225 | | 190 | ns |
| | | | 4.5 V | | 15 | 30 | | 45 | | 38 | |
| | | | 6 V | | 13 | 26 | | 38 | | 32 | |
| $t_t$ | | Any Y | 2 V | | 28 | 60 | | 90 | | 75 | ns |
| | | | 4.5 V | | 8 | 12 | | 18 | | 15 | |
| | | | 6 V | | 6 | 10 | | 15 | | 13 | |

## switching characteristics over recommended operating free-air temperature range, $C_L$ = 150 pF (unless otherwise noted) (see Figure 1)

| PARAMETER | FROM (INPUT) | TO (OUTPUT) | $V_{CC}$ | $T_A$ = 25°C | | | SN54HC258 | | SN74HC258 | | UNIT |
|---|---|---|---|---|---|---|---|---|---|---|---|
| | | | | MIN | TYP | MAX | MIN | MAX | MIN | MAX | |
| $t_{pd}$ | A or B | Any Y | 2 V | | 95 | 150 | | 245 | | 190 | ns |
| | | | 4.5 V | | 23 | 30 | | 45 | | 38 | |
| | | | 6 V | | 21 | 26 | | 38 | | 32 | |
| | $\overline{A}$/B | Any Y | 2 V | | 95 | 165 | | 240 | | 210 | |
| | | | 4.5 V | | 23 | 33 | | 48 | | 42 | |
| | | | 6 V | | 21 | 28 | | 41 | | 36 | |
| $t_{en}$ | $\overline{G}$ | Any Y | 2 V | | 100 | 200 | | 300 | | 250 | ns |
| | | | 4.5 V | | 24 | 40 | | 60 | | 50 | |
| | | | 6 V | | 18 | 34 | | 51 | | 43 | |
| $t_t$ | | Any Y | 2 V | | 45 | 210 | | 315 | | 265 | ns |
| | | | 4.5 V | | 17 | 42 | | 63 | | 53 | |
| | | | 6 V | | 13 | 36 | | 53 | | 45 | |

## operating characteristics, $T_A$ = 25°C

| PARAMETER | | TEST CONDITIONS | TYP | UNIT |
|---|---|---|---|---|
| $C_{pd}$ | Power dissipation capacitance per multiplexer | No load | 40 | pF |

## PARAMETER MEASUREMENT INFORMATION

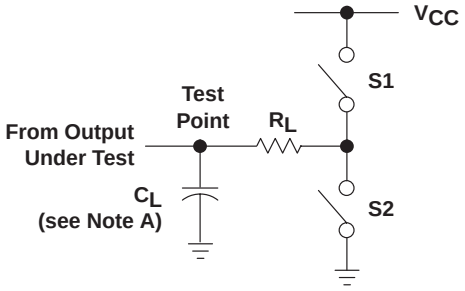


LOAD CIRCUIT

| PARAMETER | | $R_L$ | $C_L$ | S1 | S2 |
|---|---|---|---|---|---|
| $t_{en}$ | $t_{PZH}$ | 1 kΩ | 50 pF or 150 pF | Open | Closed |
| | $t_{PZL}$ | | | Closed | Open |
| $t_{dis}$ | $t_{PHZ}$ | 1 kΩ | 50 pF | Open | Closed |
| | $t_{PLZ}$ | | | Closed | Open |
| $t_{pd}$ or $t_t$ | | −− | 50 pF or 150 pF | Open | Open |

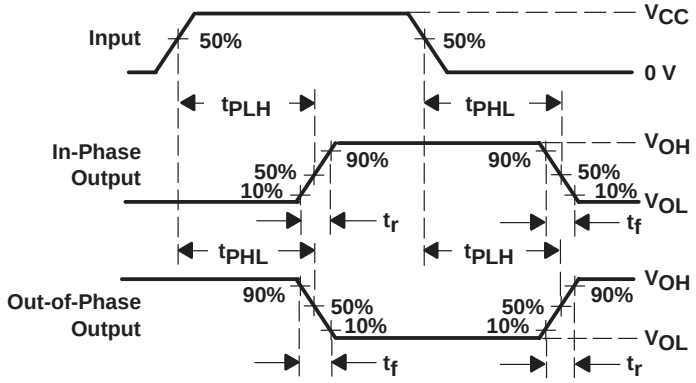


VOLTAGE WAVEFORMS
PROPAGATION DELAY AND OUTPUT TRANSITION TIMES

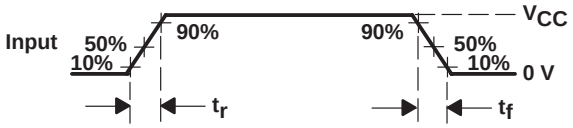


VOLTAGE WAVEFORM
INPUT RISE AND FALL TIMES

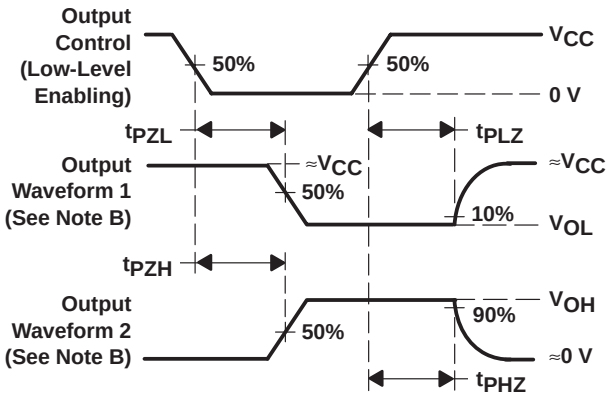


VOLTAGE WAVEFORMS
ENABLE AND DISABLE TIMES FOR 3-STATE OUTPUTS

NOTES: A. $C_L$ includes probe and test-fixture capacitance.
B. Waveform 1 is for an output with internal conditions such that the output is low except when disabled by the output control. Waveform 2 is for an output with internal conditions such that the output is high except when disabled by the output control.
C. Phase relationships between waveforms were chosen arbitrarily. All input pulses are supplied by generators having the following characteristics: PRR ≤ 1 MHz, $Z_O$ = 50 Ω, $t_r$ = 6 ns, $t_f$ = 6 ns.
D. The outputs are measured one at a time with one input transition per measurement.
E. $t_{PLZ}$ and $t_{PHZ}$ are the same as $t_{dis}$.
F. $t_{PZL}$ and $t_{PZH}$ are the same as $t_{en}$.
G. $t_{PLH}$ and $t_{PHL}$ are the same as $t_{pd}$.

**Figure 1. Load Circuit and Voltage Waveforms**

## PACKAGING INFORMATION

| Orderable part number | Status (1) | Material type (2) | Package \| Pins | Package qty \| Carrier | RoHS (3) | Lead finish/ Ball material (4) | MSL rating/ Peak reflow (5) | Op temp (°C) | Part marking (6) |
|---|---|---|---|---|---|---|---|---|---|
| 85124012A | Active | Production | LCCC (FK) \| 20 | 55 \| TUBE | No | SNPB | N/A for Pkg Type | -55 to 125 | 85124012A SNJ54HC 257FK |
| 8512401EA | Active | Production | CDIP (J) \| 16 | 25 \| TUBE | No | SNPB | N/A for Pkg Type | -55 to 125 | 8512401EA SNJ54HC257J |
| SN54HC257J | Active | Production | CDIP (J) \| 16 | 25 \| TUBE | No | SNPB | N/A for Pkg Type | -55 to 125 | SN54HC257J |
| SN54HC257J.A | Active | Production | CDIP (J) \| 16 | 25 \| TUBE | No | SNPB | N/A for Pkg Type | -55 to 125 | SN54HC257J |
| SN74HC257D | Obsolete | Production | SOIC (D) \| 16 | - | - | Call TI | Call TI | -40 to 85 | HC257 |
| SN74HC257DR | Active | Production | SOIC (D) \| 16 | 2500 \| LARGE T&R | Yes | NIPDAU \| SN | Level-1-260C-UNLIM | -40 to 85 | HC257 |
| SN74HC257DR.A | Active | Production | SOIC (D) \| 16 | 2500 \| LARGE T&R | Yes | NIPDAU | Level-1-260C-UNLIM | -40 to 85 | HC257 |
| SN74HC257DRG4 | Active | Production | SOIC (D) \| 16 | 2500 \| LARGE T&R | Yes | NIPDAU | Level-1-260C-UNLIM | -40 to 85 | HC257 |
| SN74HC257DRG4.A | Active | Production | SOIC (D) \| 16 | 2500 \| LARGE T&R | Yes | NIPDAU | Level-1-260C-UNLIM | -40 to 85 | HC257 |
| SN74HC257DT | Obsolete | Production | SOIC (D) \| 16 | - | - | Call TI | Call TI | -40 to 85 | HC257 |
| SN74HC257N | Active | Production | PDIP (N) \| 16 | 25 \| TUBE | Yes | NIPDAU | N/A for Pkg Type | -40 to 85 | SN74HC257N |
| SN74HC257N.A | Active | Production | PDIP (N) \| 16 | 25 \| TUBE | Yes | NIPDAU | N/A for Pkg Type | -40 to 85 | SN74HC257N |
| SN74HC257NSR | Active | Production | SOP (NS) \| 16 | 2000 \| LARGE T&R | Yes | NIPDAU \| NIPDAU | Level-1-260C-UNLIM | -40 to 85 | HC257 |
| SN74HC257NSR.A | Active | Production | SOP (NS) \| 16 | 2000 \| LARGE T&R | Yes | NIPDAU | Level-1-260C-UNLIM | -40 to 85 | HC257 |
| SN74HC257PW | Obsolete | Production | TSSOP (PW) \| 16 | - | - | Call TI | Call TI | -40 to 85 | HC257 |
| SN74HC257PWR | Active | Production | TSSOP (PW) \| 16 | 2000 \| LARGE T&R | Yes | NIPDAU \| SN \| NIPDAU | Level-1-260C-UNLIM | -40 to 85 | HC257 |
| SN74HC257PWR.A | Active | Production | TSSOP (PW) \| 16 | 2000 \| LARGE T&R | Yes | NIPDAU | Level-1-260C-UNLIM | -40 to 85 | HC257 |
| SN74HC258D | Obsolete | Production | SOIC (D) \| 16 | - | - | Call TI | Call TI | -40 to 85 | HC258 |
| SN74HC258DR | Active | Production | SOIC (D) \| 16 | 2500 \| LARGE T&R | Yes | NIPDAU | Level-1-260C-UNLIM | -40 to 85 | HC258 |
| SN74HC258DR.A | Active | Production | SOIC (D) \| 16 | 2500 \| LARGE T&R | Yes | NIPDAU | Level-1-260C-UNLIM | -40 to 85 | HC258 |
| SN74HC258N | Active | Production | PDIP (N) \| 16 | 25 \| TUBE | Yes | NIPDAU | N/A for Pkg Type | -40 to 85 | SN74HC258N |
| SN74HC258N.A | Active | Production | PDIP (N) \| 16 | 25 \| TUBE | Yes | NIPDAU | N/A for Pkg Type | -40 to 85 | SN74HC258N |
| SN74HC258NSR | Active | Production | SOP (NS) \| 16 | 2000 \| LARGE T&R | Yes | NIPDAU | Level-1-260C-UNLIM | -40 to 85 | HC258 |
| SN74HC258NSR.A | Active | Production | SOP (NS) \| 16 | 2000 \| LARGE T&R | Yes | NIPDAU | Level-1-260C-UNLIM | -40 to 85 | HC258 |
| SN74HC258PW | Obsolete | Production | TSSOP (PW) \| 16 | - | - | Call TI | Call TI | -40 to 85 | HC258 |
| SN74HC258PWR | Active | Production | TSSOP (PW) \| 16 | 2000 \| LARGE T&R | Yes | NIPDAU | Level-1-260C-UNLIM | -40 to 85 | HC258 |
| SN74HC258PWR.A | Active | Production | TSSOP (PW) \| 16 | 2000 \| LARGE T&R | Yes | NIPDAU | Level-1-260C-UNLIM | -40 to 85 | HC258 |

| Orderable part number | Status (1) | Material type (2) | Package \| Pins | Package qty \| Carrier | RoHS (3) | Lead finish/ Ball material (4) | MSL rating/ Peak reflow (5) | Op temp (°C) | Part marking (6) |
|---|---|---|---|---|---|---|---|---|---|
| SNJ54HC257FK | Active | Production | LCCC (FK) \| 20 | 55 \| TUBE | No | SNPB | N/A for Pkg Type | -55 to 125 | 85124012A SNJ54HC 257FK |
| SNJ54HC257FK.A | Active | Production | LCCC (FK) \| 20 | 55 \| TUBE | No | SNPB | N/A for Pkg Type | -55 to 125 | 85124012A SNJ54HC 257FK |
| SNJ54HC257J | Active | Production | CDIP (J) \| 16 | 25 \| TUBE | No | SNPB | N/A for Pkg Type | -55 to 125 | 8512401EA SNJ54HC257J |
| SNJ54HC257J.A | Active | Production | CDIP (J) \| 16 | 25 \| TUBE | No | SNPB | N/A for Pkg Type | -55 to 125 | 8512401EA SNJ54HC257J |

(1) **Status:** For more details on status, see our product life cycle.

(2) **Material type:** When designated, preproduction parts are prototypes/experimental devices, and are not yet approved or released for full production. Testing and final process, including without limitation quality assurance, reliability performance testing, and/or process qualification, may not yet be complete, and this item is subject to further changes or possible discontinuation. If available for ordering, purchases will be subject to an additional waiver at checkout, and are intended for early internal evaluation purposes only. These items are sold without warranties of any kind.

(3) **RoHS values:** Yes, No, RoHS Exempt. See the TI RoHS Statement for additional information and value definition.

(4) **Lead finish/Ball material:** Parts may have multiple material finish options. Finish options are separated by a vertical ruled line. Lead finish/Ball material values may wrap to two lines if the finish value exceeds the maximum column width.

(5) **MSL rating/Peak reflow:** The moisture sensitivity level ratings and peak solder (reflow) temperatures. In the event that a part has multiple moisture sensitivity ratings, only the lowest level per JEDEC standards is shown. Refer to the shipping label for the actual reflow temperature that will be used to mount the part to the printed circuit board.

(6) **Part marking:** There may be an additional marking, which relates to the logo, the lot trace code information, or the environmental category of the part.

Multiple part markings will be inside parentheses. Only one part marking contained in parentheses and separated by a "~" will appear on a part. If a line is indented then it is a continuation of the previous line and the two combined represent the entire part marking for that device.

**Important Information and Disclaimer:**The information provided on this page represents TI's knowledge and belief as of the date that it is provided. TI bases its knowledge and belief on information provided by third parties, and makes no representation or warranty as to the accuracy of such information. Efforts are underway to better integrate information from third parties. TI has taken and continues to take reasonable steps to provide representative and accurate information but may not have conducted destructive testing or chemical analysis on incoming materials and chemicals. TI and TI suppliers consider certain information to be proprietary, and thus CAS numbers and other limited information may not be available for release.

In no event shall TI's liability arising out of such information exceed the total purchase price of the TI part(s) at issue in this document sold by TI to Customer on an annual basis.

**OTHER QUALIFIED VERSIONS OF SN54HC257, SN74HC257 :**

- Catalog : SN74HC257
- Military : SN54HC257

NOTE: Qualified Version Definitions:

- Catalog - TI's standard catalog product
- Military - QML certified for Military and Defense Applications

## TAPE AND REEL INFORMATION

**REEL DIMENSIONS**

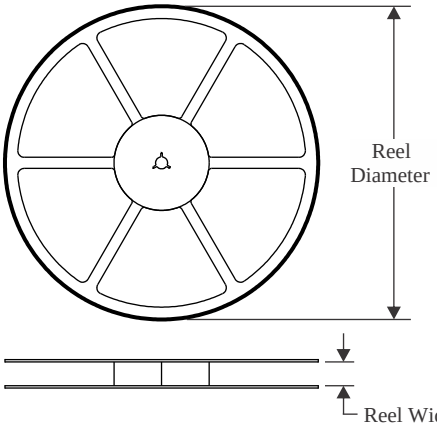


**TAPE DIMENSIONS**

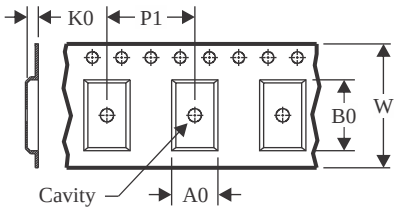


| | |
|---|---|
| A0 | Dimension designed to accommodate the component width |
| B0 | Dimension designed to accommodate the component length |
| K0 | Dimension designed to accommodate the component thickness |
| W | Overall width of the carrier tape |
| P1 | Pitch between successive cavity centers |

**QUADRANT ASSIGNMENTS FOR PIN 1 ORIENTATION IN TAPE**

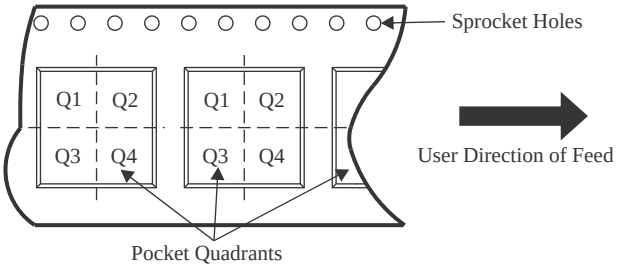


*All dimensions are nominal

| Device | Package Type | Package Drawing | Pins | SPQ | Reel Diameter (mm) | Reel Width W1 (mm) | A0 (mm) | B0 (mm) | K0 (mm) | P1 (mm) | W (mm) | Pin1 Quadrant |
|---|---|---|---|---|---|---|---|---|---|---|---|---|
| SN74HC257DR | SOIC | D | 16 | 2500 | 330.0 | 16.4 | 6.5 | 10.3 | 2.1 | 8.0 | 16.0 | Q1 |
| SN74HC257DRG4 | SOIC | D | 16 | 2500 | 330.0 | 16.4 | 6.5 | 10.3 | 2.1 | 8.0 | 16.0 | Q1 |
| SN74HC257NSR | SOP | NS | 16 | 2000 | 330.0 | 16.4 | 8.2 | 10.5 | 2.5 | 12.0 | 16.0 | Q1 |
| SN74HC257NSR | SOP | NS | 16 | 2000 | 330.0 | 16.4 | 8.45 | 10.55 | 2.5 | 12.0 | 16.2 | Q1 |
| SN74HC257PWR | TSSOP | PW | 16 | 2000 | 330.0 | 12.4 | 6.85 | 5.45 | 1.6 | 8.0 | 12.0 | Q1 |
| SN74HC257PWR | TSSOP | PW | 16 | 2000 | 330.0 | 12.4 | 6.9 | 5.6 | 1.6 | 8.0 | 12.0 | Q1 |
| SN74HC258DR | SOIC | D | 16 | 2500 | 330.0 | 16.4 | 6.5 | 10.3 | 2.1 | 8.0 | 16.0 | Q1 |
| SN74HC258NSR | SOP | NS | 16 | 2000 | 330.0 | 16.4 | 8.2 | 10.5 | 2.5 | 12.0 | 16.0 | Q1 |
| SN74HC258PWR | TSSOP | PW | 16 | 2000 | 330.0 | 12.4 | 6.9 | 5.6 | 1.6 | 8.0 | 12.0 | Q1 |

TAPE AND REEL BOX DIMENSIONS

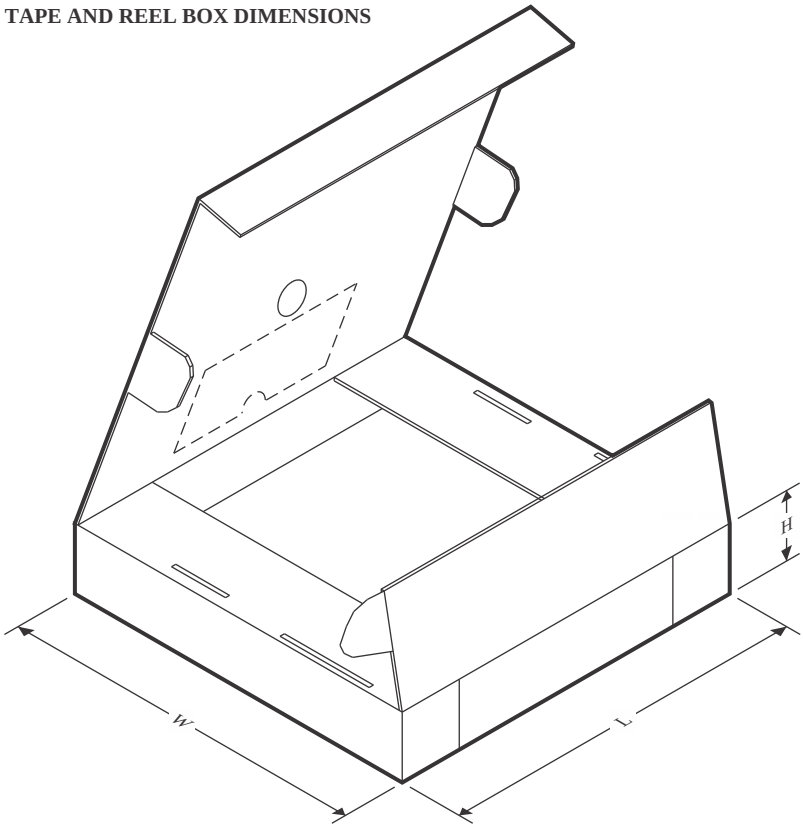


*All dimensions are nominal

| Device | Package Type | Package Drawing | Pins | SPQ | Length (mm) | Width (mm) | Height (mm) |
|---|---|---|---|---|---|---|---|
| SN74HC257DR | SOIC | D | 16 | 2500 | 356.0 | 356.0 | 35.0 |
| SN74HC257DRG4 | SOIC | D | 16 | 2500 | 356.0 | 356.0 | 35.0 |
| SN74HC257NSR | SOP | NS | 16 | 2000 | 356.0 | 356.0 | 35.0 |
| SN74HC257NSR | SOP | NS | 16 | 2000 | 356.0 | 356.0 | 35.0 |
| SN74HC257PWR | TSSOP | PW | 16 | 2000 | 366.0 | 364.0 | 50.0 |
| SN74HC257PWR | TSSOP | PW | 16 | 2000 | 356.0 | 356.0 | 35.0 |
| SN74HC258DR | SOIC | D | 16 | 2500 | 353.0 | 353.0 | 32.0 |
| SN74HC258NSR | SOP | NS | 16 | 2000 | 356.0 | 356.0 | 35.0 |
| SN74HC258PWR | TSSOP | PW | 16 | 2000 | 356.0 | 356.0 | 35.0 |

## TUBE

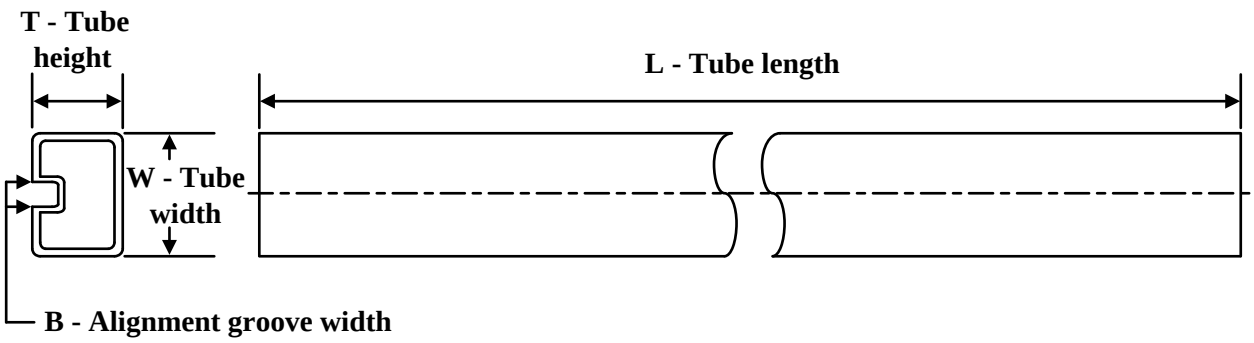


*All dimensions are nominal

| Device | Package Name | Package Type | Pins | SPQ | L (mm) | W (mm) | T (µm) | B (mm) |
|---|---|---|---|---|---|---|---|---|
| 85124012A | FK | LCCC | 20 | 55 | 506.98 | 12.06 | 2030 | NA |
| SN74HC257N | N | PDIP | 16 | 25 | 506 | 13.97 | 11230 | 4.32 |
| SN74HC257N | N | PDIP | 16 | 25 | 506 | 13.97 | 11230 | 4.32 |
| SN74HC257N.A | N | PDIP | 16 | 25 | 506 | 13.97 | 11230 | 4.32 |
| SN74HC257N.A | N | PDIP | 16 | 25 | 506 | 13.97 | 11230 | 4.32 |
| SN74HC258N | N | PDIP | 16 | 25 | 506 | 13.97 | 11230 | 4.32 |
| SN74HC258N | N | PDIP | 16 | 25 | 506 | 13.97 | 11230 | 4.32 |
| SN74HC258N.A | N | PDIP | 16 | 25 | 506 | 13.97 | 11230 | 4.32 |
| SN74HC258N.A | N | PDIP | 16 | 25 | 506 | 13.97 | 11230 | 4.32 |
| SNJ54HC257FK | FK | LCCC | 20 | 55 | 506.98 | 12.06 | 2030 | NA |
| SNJ54HC257FK.A | FK | LCCC | 20 | 55 | 506.98 | 12.06 | 2030 | NA |

## N (R–PDIP–T**) PLASTIC DUAL–IN–LINE PACKAGE

16 PINS SHOWN

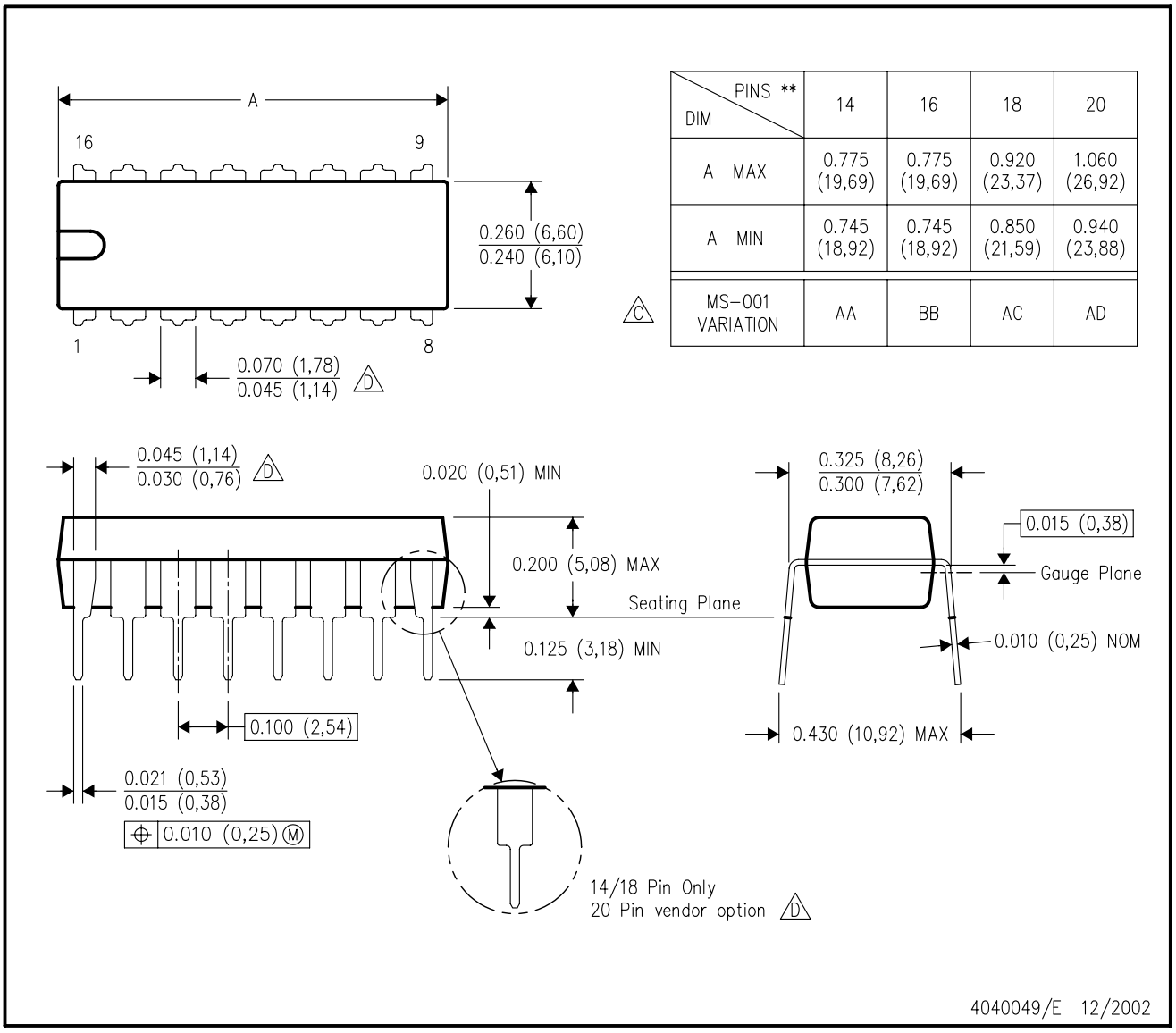


| DIM \ PINS ** | 14 | 16 | 18 | 20 |
|---|---|---|---|---|
| A MAX | 0.775 (19,69) | 0.775 (19,69) | 0.920 (23,37) | 1.060 (26,92) |
| A MIN | 0.745 (18,92) | 0.745 (18,92) | 0.850 (21,59) | 0.940 (23,88) |
| MS–001 VARIATION (C) | AA | BB | AC | AD |

NOTES:
A. All linear dimensions are in inches (millimeters).
B. This drawing is subject to change without notice.
C. Falls within JEDEC MS–001, except 18 and 20 pin minimum body length (Dim A).
D. The 20 pin end lead shoulder width is a vendor option, either half or full width.

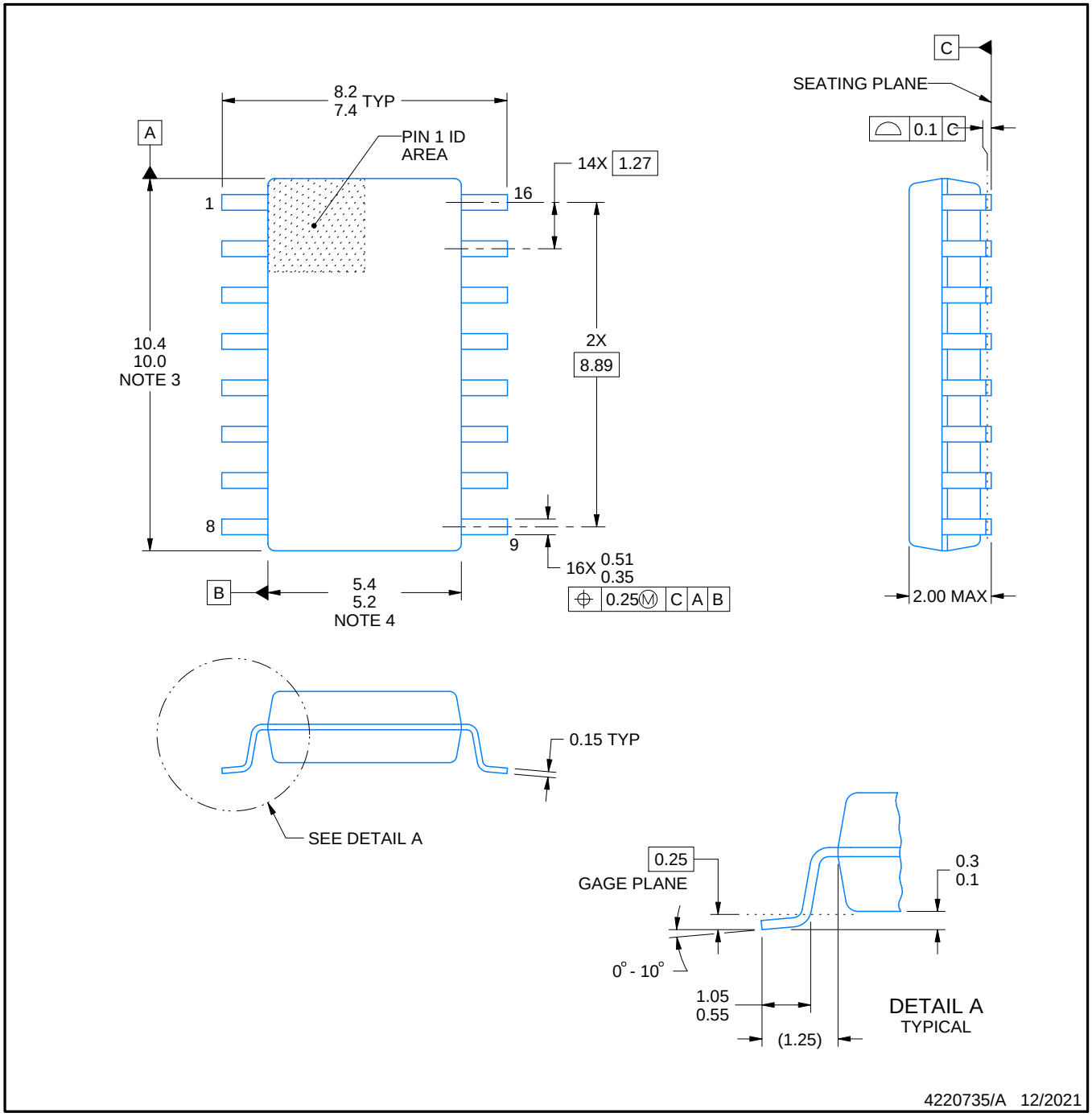


NOTES:

1. All linear dimensions are in millimeters. Dimensions in parenthesis are for reference only. Dimensioning and tolerancing per ASME Y14.5M.
2. This drawing is subject to change without notice.
3. This dimension does not include mold flash, protrusions, or gate burrs. Mold flash, protrusions, or gate burrs shall not exceed 0.15 mm, per side.
4. This dimension does not include interlead flash. Interlead flash shall not exceed 0.25 mm, per side.

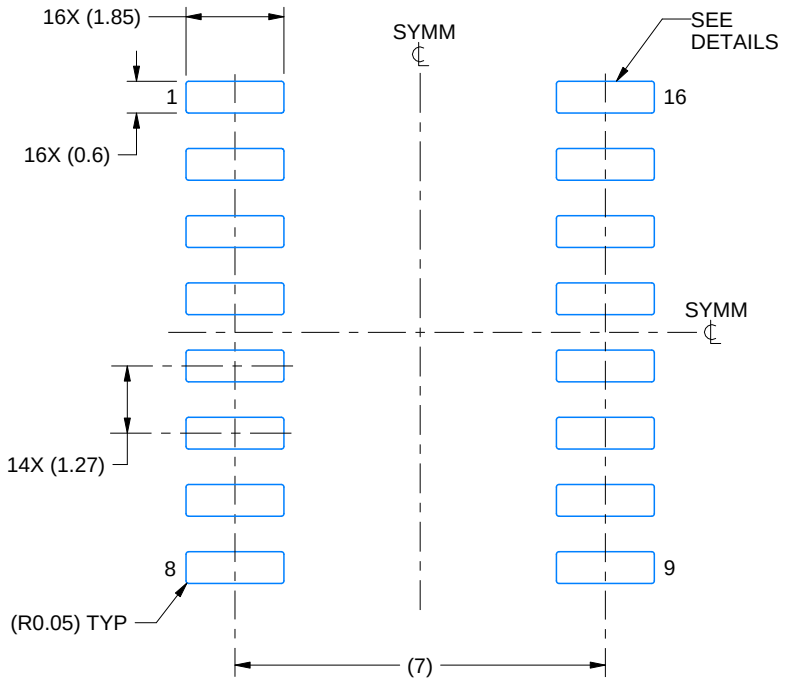


LAND PATTERN EXAMPLE
SCALE:7X

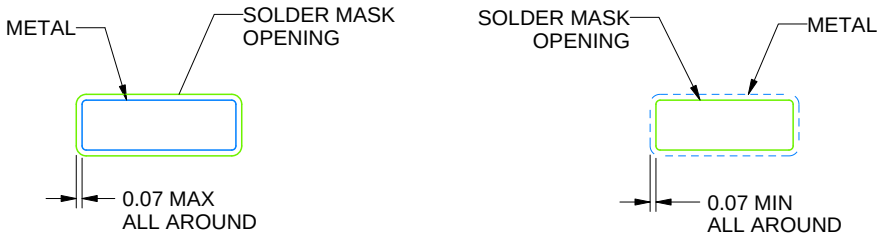


NON SOLDER MASK DEFINED

SOLDER MASK DEFINED

SOLDER MASK DETAILS

4220735/A 12/2021

NOTES: (continued)

5. Publication IPC-7351 may have alternate designs.
6. Solder mask tolerances between and around signal pads can vary based on board fabrication site.

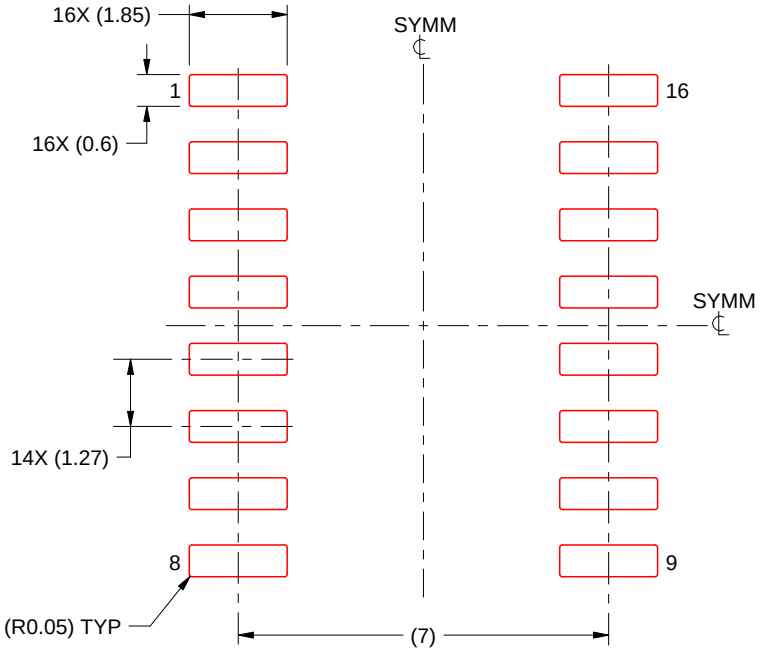


SOLDER PASTE EXAMPLE
BASED ON 0.125 mm THICK STENCIL
SCALE:7X

4220735/A 12/2021

NOTES: (continued)

7. Laser cutting apertures with trapezoidal walls and rounded corners may offer better paste release. IPC-7525 may have alternate design recommendations.
8. Board assembly site may have different recommendations for stencil design.

D (R–PDSO–G16) PLASTIC SMALL OUTLINE

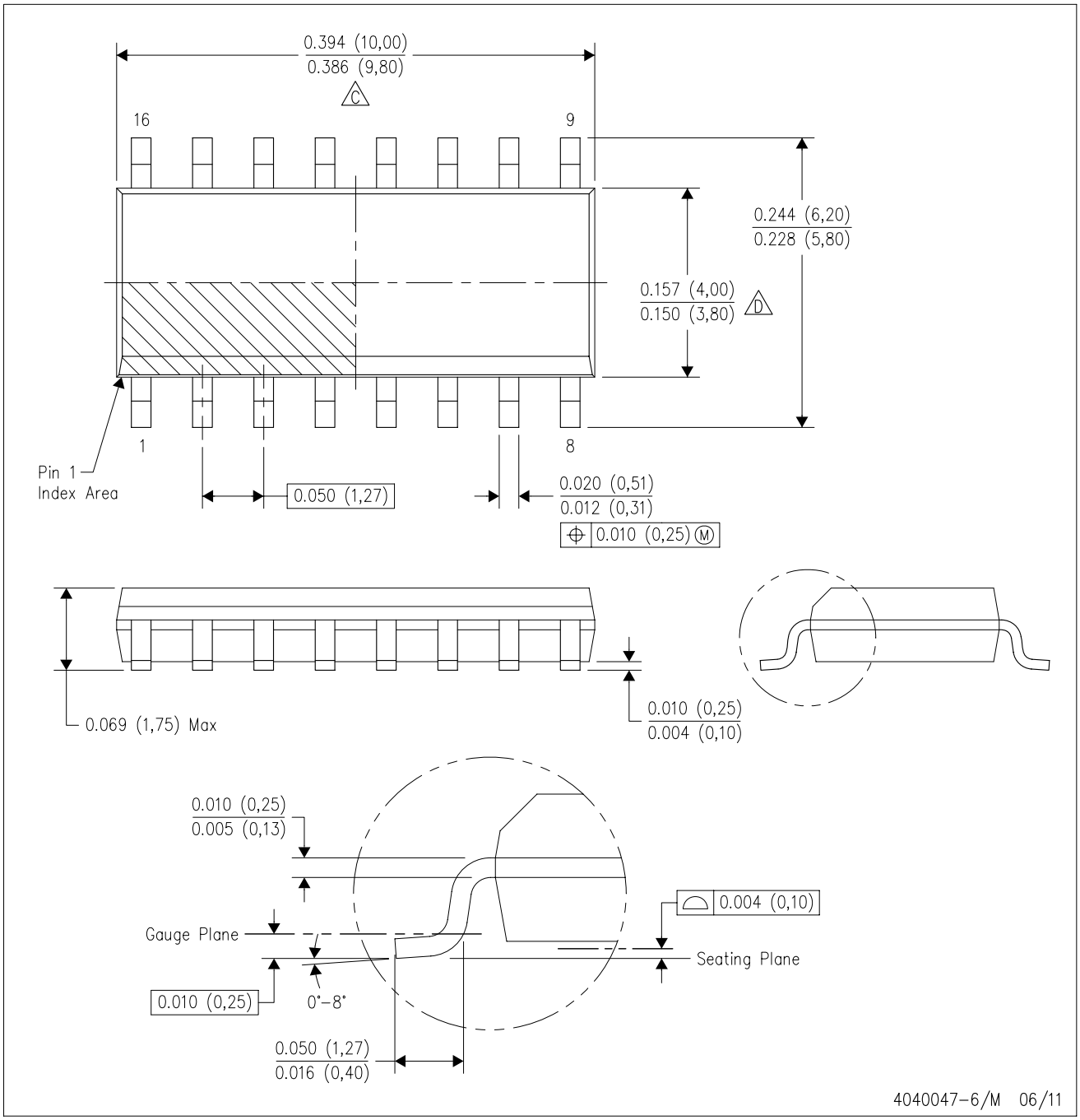


NOTES:
A. All linear dimensions are in inches (millimeters).
B. This drawing is subject to change without notice.
C. Body length does not include mold flash, protrusions, or gate burrs. Mold flash, protrusions, or gate burrs shall not exceed 0.006 (0,15) each side.
D. Body width does not include interlead flash. Interlead flash shall not exceed 0.017 (0,43) each side.
E. Reference JEDEC MS–012 variation AC.

# PW0016A

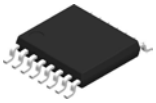

# PACKAGE OUTLINE

## TSSOP - 1.2 mm max height

SMALL OUTLINE PACKAGE

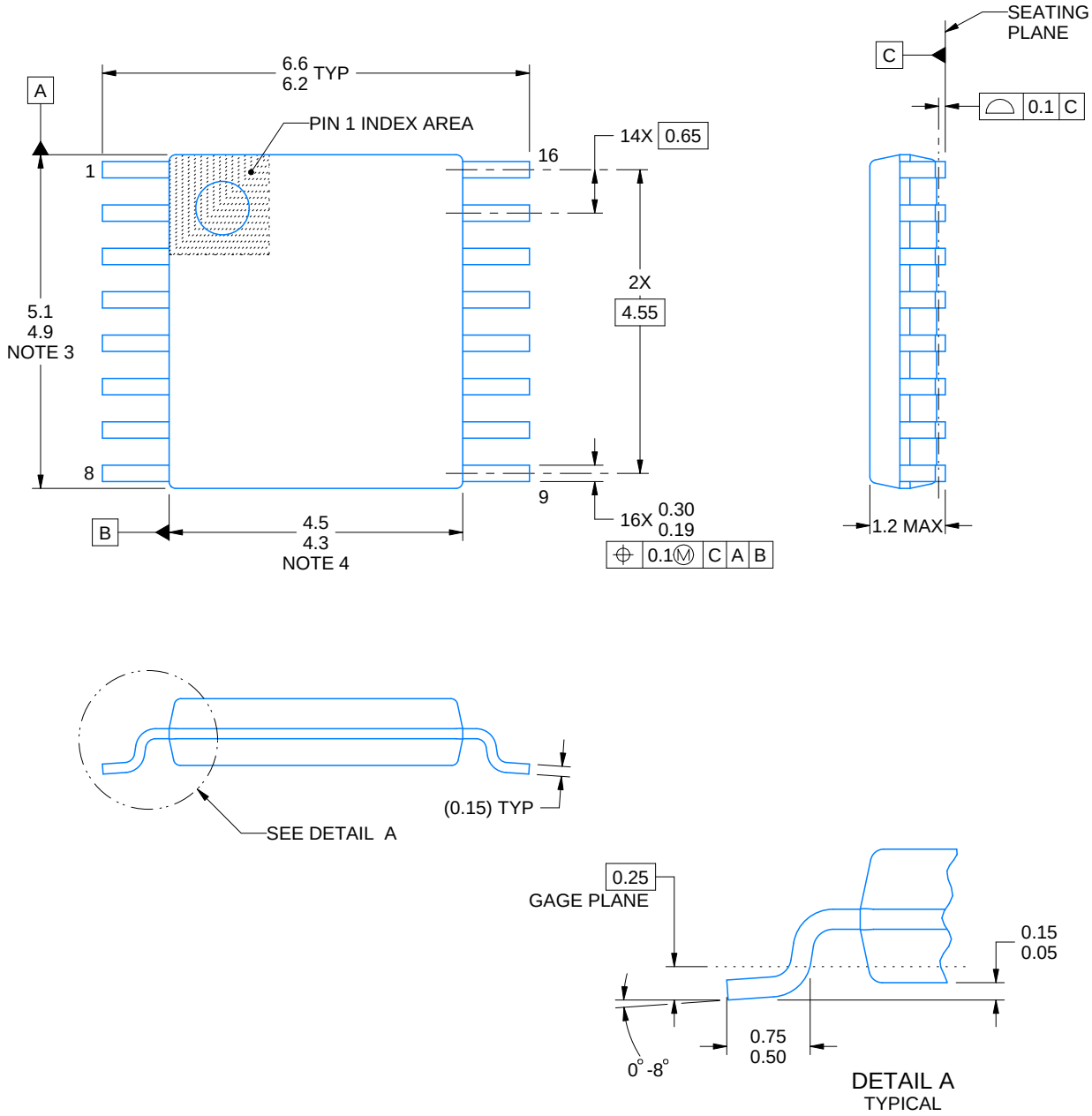


NOTES:

1. All linear dimensions are in millimeters. Any dimensions in parenthesis are for reference only. Dimensioning and tolerancing per ASME Y14.5M.
2. This drawing is subject to change without notice.
3. This dimension does not include mold flash, protrusions, or gate burrs. Mold flash, protrusions, or gate burrs shall not exceed 0.15 mm per side.
4. This dimension does not include interlead flash. Interlead flash shall not exceed 0.25 mm per side.
5. Reference JEDEC registration MO-153.

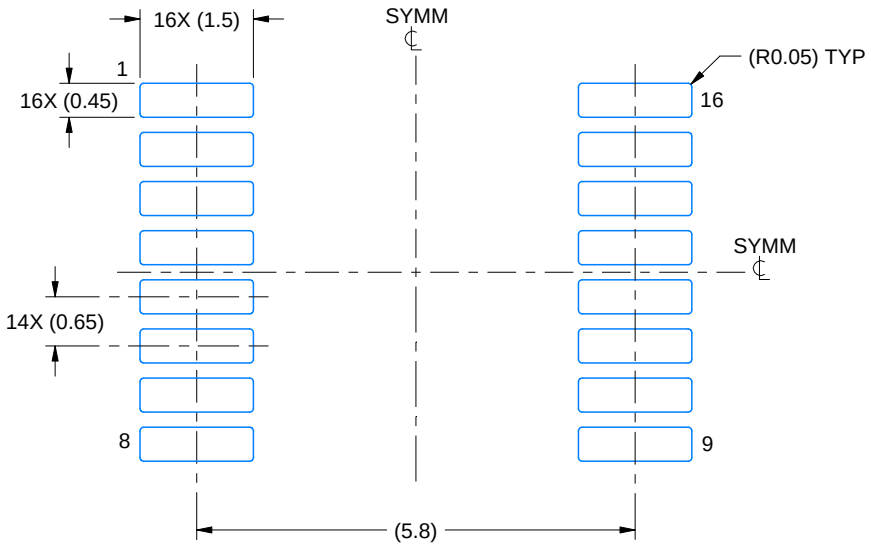


LAND PATTERN EXAMPLE
EXPOSED METAL SHOWN
SCALE: 10X

NON-SOLDER MASK DEFINED (PREFERRED)

SOLDER MASK DEFINED

SOLDER MASK DETAILS

4220204/A 02/2017

NOTES: (continued)

6. Publication IPC-7351 may have alternate designs.
7. Solder mask tolerances between and around signal pads can vary based on board fabrication site.

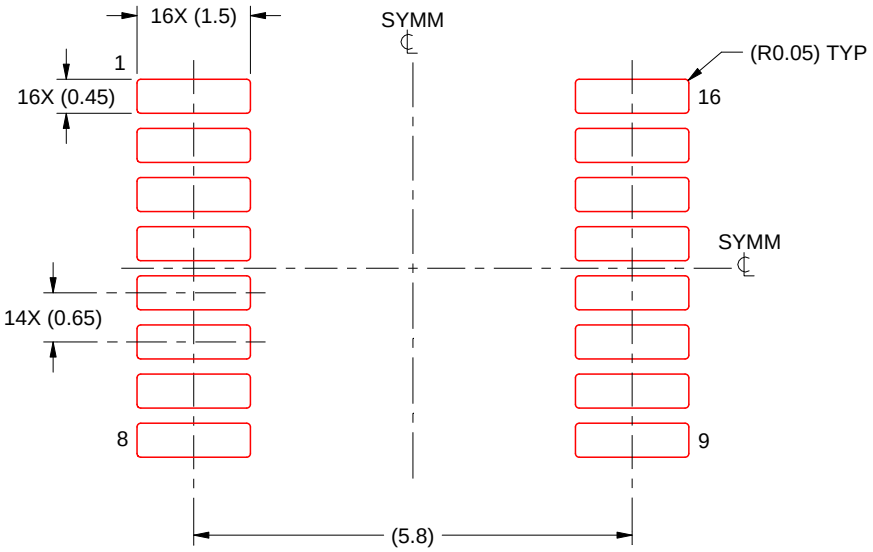


SOLDER PASTE EXAMPLE
BASED ON 0.125 mm THICK STENCIL
SCALE: 10X

4220204/A 02/2017

NOTES: (continued)

8. Laser cutting apertures with trapezoidal walls and rounded corners may offer better paste release. IPC-7525 may have alternate design recommendations.
9. Board assembly site may have different recommendations for stencil design.

## MECHANICAL DATA

**NS (R-PDSO-G**)** **PLASTIC SMALL-OUTLINE PACKAGE**

**14-PINS SHOWN**

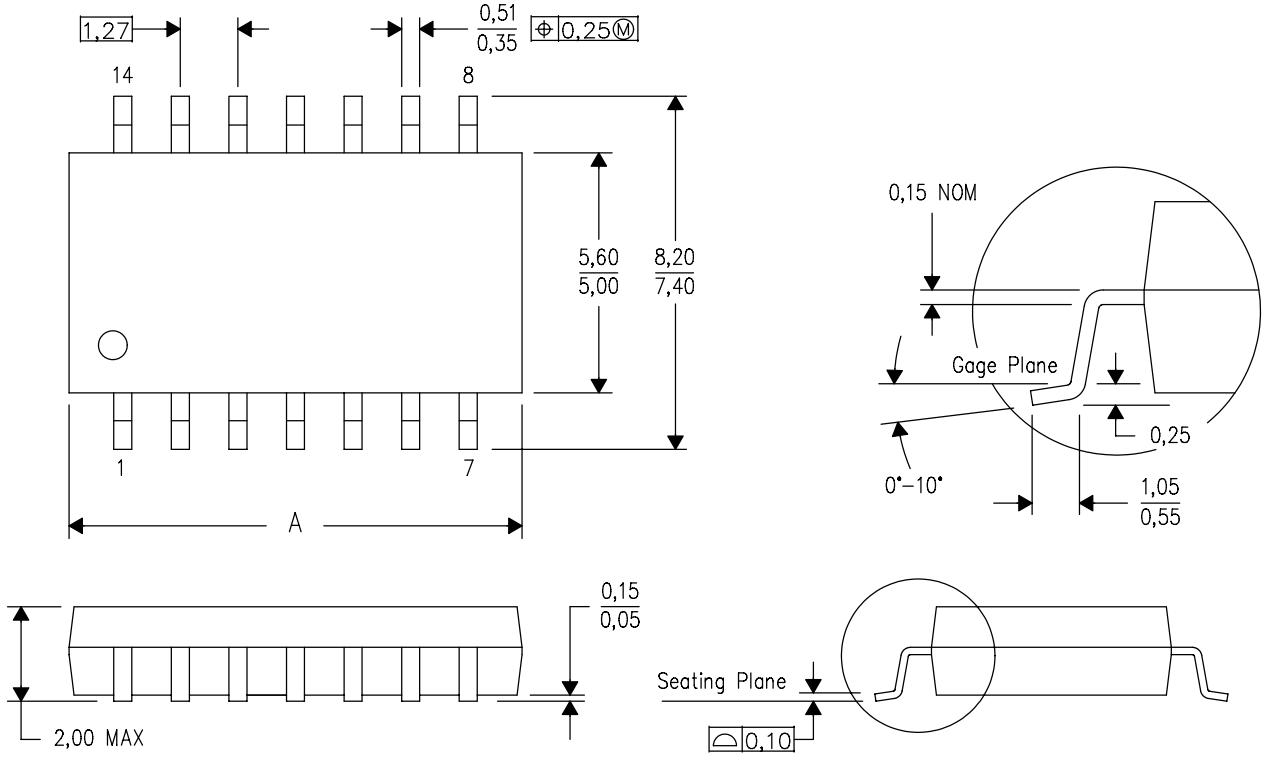


| DIM \ PINS ** | 14 | 16 | 20 | 24 |
|---|---|---|---|---|
| A MAX | 10,50 | 10,50 | 12,90 | 15,30 |
| A MIN | 9,90 | 9,90 | 12,30 | 14,70 |

4040062/C 03/03

NOTES:
A. All linear dimensions are in millimeters.
B. This drawing is subject to change without notice.
C. Body dimensions do not include mold flash or protrusion, not to exceed 0,15.

# GENERIC PACKAGE VIEW

## FK 20

## LCCC - 2.03 mm max height

**8.89 x 8.89, 1.27 mm pitch**

LEADLESS CERAMIC CHIP CARRIER

This image is a representation of the package family, actual package may vary.
Refer to the product data sheet for package details.

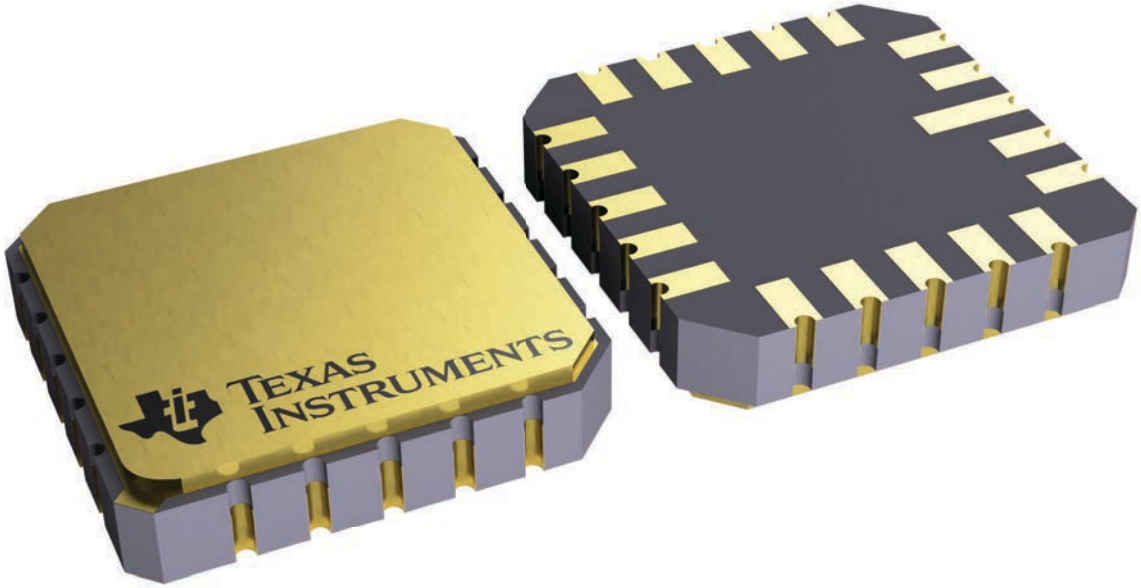


4229370VA\

J (R–GDIP–T**) CERAMIC DUAL IN–LINE PACKAGE

14 LEADS SHOWN

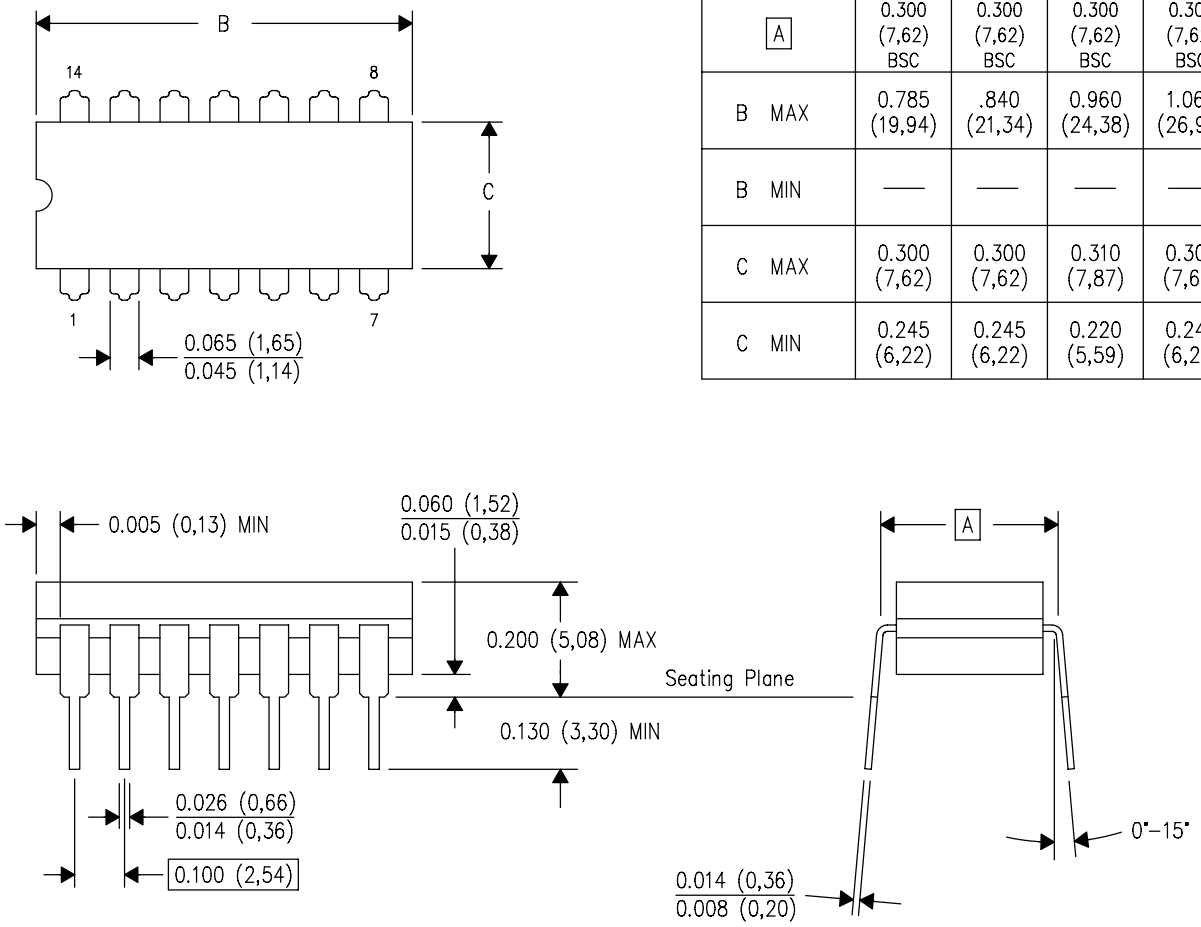


| DIM \ PINS ** | 14 | 16 | 18 | 20 |
|---|---|---|---|---|
| A | 0.300 (7,62) BSC | 0.300 (7,62) BSC | 0.300 (7,62) BSC | 0.300 (7,62) BSC |
| B MAX | 0.785 (19,94) | .840 (21,34) | 0.960 (24,38) | 1.060 (26,92) |
| B MIN | — | — | — | — |
| C MAX | 0.300 (7,62) | 0.300 (7,62) | 0.310 (7,87) | 0.300 (7,62) |
| C MIN | 0.245 (6,22) | 0.245 (6,22) | 0.220 (5,59) | 0.245 (6,22) |

4040083/F 03/03

NOTES:
- A. All linear dimensions are in inches (millimeters).
- B. This drawing is subject to change without notice.
- C. This package is hermetically sealed with a ceramic lid using glass frit.
- D. Index point is provided on cap for terminal identification only on press ceramic glass frit seal only.
- E. Falls within MIL STD 1835 GDIP1–T14, GDIP1–T16, GDIP1–T18 and GDIP1–T20.

# IMPORTANT NOTICE AND DISCLAIMER

TI PROVIDES TECHNICAL AND RELIABILITY DATA (INCLUDING DATA SHEETS), DESIGN RESOURCES (INCLUDING REFERENCE DESIGNS), APPLICATION OR OTHER DESIGN ADVICE, WEB TOOLS, SAFETY INFORMATION, AND OTHER RESOURCES “AS IS” AND WITH ALL FAULTS, AND DISCLAIMS ALL WARRANTIES, EXPRESS AND IMPLIED, INCLUDING WITHOUT LIMITATION ANY IMPLIED WARRANTIES OF MERCHANTABILITY, FITNESS FOR A PARTICULAR PURPOSE OR NON-INFRINGEMENT OF THIRD PARTY INTELLECTUAL PROPERTY RIGHTS.

These resources are intended for skilled developers designing with TI products. You are solely responsible for (1) selecting the appropriate TI products for your application, (2) designing, validating and testing your application, and (3) ensuring your application meets applicable standards, and any other safety, security, regulatory or other requirements.

These resources are subject to change without notice. TI grants you permission to use these resources only for development of an application that uses the TI products described in the resource. Other reproduction and display of these resources is prohibited. No license is granted to any other TI intellectual property right or to any third party intellectual property right. TI disclaims responsibility for, and you will fully indemnify TI and its representatives against, any claims, damages, costs, losses, and liabilities arising out of your use of these resources.

TI’s products are provided subject to TI’s Terms of Sale or other applicable terms available either on ti.com or provided in conjunction with such TI products. TI’s provision of these resources does not expand or otherwise alter TI’s applicable warranties or warranty disclaimers for TI products.

TI objects to and rejects any additional or different terms you may have proposed.

Mailing Address: Texas Instruments, Post Office Box 655303, Dallas, Texas 75265
Copyright © 2025, Texas Instruments Incorporated