TMUX1109 5V, ±2.5V, Low-Leakage-Current, 4:1, 2-Channel Precision Multiplexer

1 Features

- Single supply range: 1.08V to 5.5V
- Dual supply range: ±2.75V
- Low leakage current: 3pA
- Low charge injection: 1pC
- Low on-resistance: 1.8Ω
- -40°C to +125°C operating temperature
- 1.8V logic compatible
- Fail-safe logic
- Rail to rail operation
- Bidirectional signal path
- Break-before-make switching
- ESD protection HBM: 2000V

2 Applications

- Ultrasound scanners
- Patient monitoring and diagnostics
- Optical networking
- Optical test equipment
- Remote radio unit
- Wired networking
- ATE test equipment
- Factory automation and industrial controls
- Programmable logic controllers (PLC)
- Analog input modules
- Sonar receivers
- Motor drive
- Servo drive position feedback

3 Description

The TMUX1109 is a precision complementary metal-oxide semiconductor (CMOS) multiplexer (MUX). The TMUX1109 offers differential 4:1 or dual 4:1 single-ended channels. Wide operating supply of 1.08V to 5.5V allows for use in a broad array of applications from medical equipment to industrial systems. The device supports bidirectional analog and digital signals on the source (Sx) and drain (D) pins ranging from GND to V_{DD}. All logic inputs have 1.8V logic compatible thresholds, allowing for both TTL and CMOS logic compatibility when operating in the valid supply voltage range. Fail-Safe Logic circuitry allows voltages on the control pins to be applied before the supply pin, protecting the device from potential damage.

The TMUX1109 is part of the precision switches and multiplexers family of devices. These devices have very low on and off leakage currents and low charge injection, allowing them to be used in high precision measurement applications. A low supply current of 8nA and small package options enable use in portable applications.

Package Information

PART NUMBER	PACKAGE(1)	PACKAGE SIZE(2)
TMUX1109	PW (TSSOP, 16)	5mm × 6.4mm
	RSV (QFN, 16)	2.6mm × 1.8mm

(1) For more information, see Section 10
(2) The package size (length × width) is a nominal value and includes pins, where applicable.

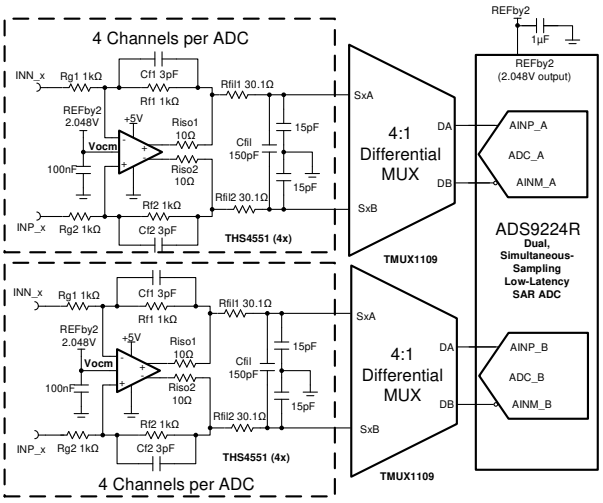

Application Example

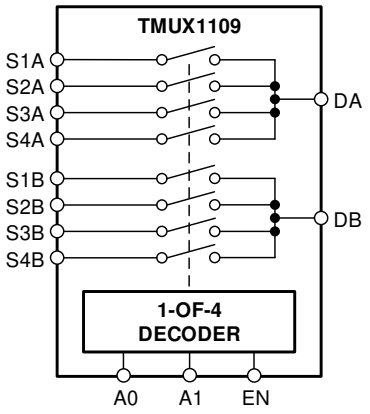

Block Diagram

An IMPORTANT NOTICE at the end of this data sheet addresses availability, warranty, changes, use in safety-critical applications, intellectual property matters and other important disclaimers. PRODUCTION DATA.

Table of Contents

1 Features....1
2 Applications....1
3 Description....1
4 Pin Configuration and Functions....3
5 Specifications....4
5.1 Absolute Maximum Ratings....4
5.2 ESD Ratings....4
5.3 Recommended Operating Conditions....4
5.4 Thermal Information....5
5.5 Electrical Characteristics (V_{DD} = 5V ±10 %)....5
5.6 Electrical Characteristics (V_{DD} = 3.3V ±10 %)....7
5.7 Electrical Characteristics (V_{DD} = 2.5V ±10 %), (V_{SS} = –2.5V ±10 %)....8
5.8 Electrical Characteristics (V_{DD} = 1.8V ±10 %)....10
5.9 Electrical Characteristics (V_{DD} = 1.2V ±10 %)....11
6 Detailed Description....17
6.1 Overview....17
6.2 Functional Block Diagram....22
6.3 Feature Description....22
6.4 Device Functional Modes....24
7 Application and Implementation....25
7.1 Application Information....25
7.2 Typical Application....25
7.3 Power Supply Recommendations....27
7.4 Layout....27
8 Device and Documentation Support....29
8.1 Documentation Support....29
8.2 Receiving Notification of Documentation Updates....29
8.3 Support Resources....29
8.4 Trademarks....29
8.5 Electrostatic Discharge Caution....29
8.6 Glossary....29
9 Revision History....29
10 Mechanical, Packaging, and Orderable Information....29

Copyright © 2024 Texas Instruments Incorporated

4 Pin Configuration and Functions

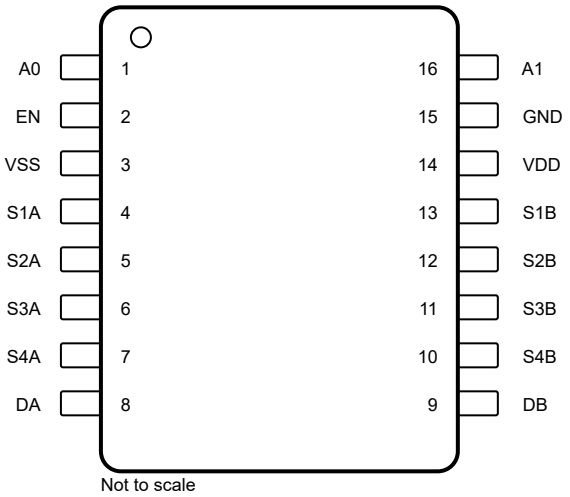

Figure 4-1. PW Package, 16-Pin TSSOP (Top View)

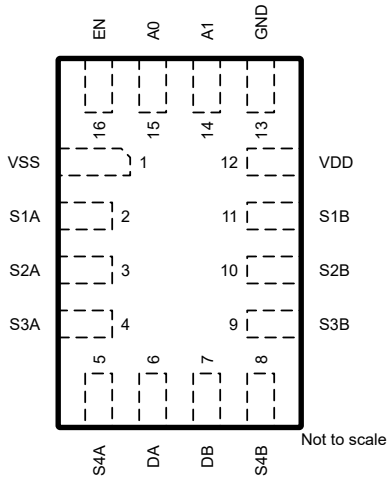

Figure 4-2. RSV Package, 16-Pin QFN (Top View)

Table 4-1. Pin Functions

PIN			TYPE[(1)]	DESCRIPTION
NAME	TSSOP	UQFN		
A0	1	15	I	Address line 0. Controls the switch configuration as listed in Table 6-1.
EN	2	16	I	Active high logic input. When this pin is low, all switches are turned off. When this pin is high, the A[1:0] address inputs determine which switch is turned on.
VSS	3	1	P	Negative power supply. This pin is the most negative power-supply potential. For reliable operation, connect a decoupling capacitor ranging from 0.1µF to 10µF between V_{SS} and GND. V_{SS} can be connected to ground for single supply applications.
S1A	4	2	I/O	Source pin 1A. Can be an input or output.
S2A	5	3	I/O	Source pin 2A. Can be an input or output.
S3A	6	4	I/O	Source pin 3A. Can be an input or output.
S4A	7	5	I/O	Source pin 4A. Can be an input or output.
DA	8	6	I/O	Drain pin A. Can be an input or output.
DB	9	7	I/O	Drain pin B. Can be an input or output.
S4B	10	8	I/O	Source pin 4B. Can be an input or output.
S3B	11	9	I/O	Source pin 3B. Can be an input or output.
S2B	12	10	I/O	Source pin 2B. Can be an input or output.
S1B	13	11	I/O	Source pin 1B. Can be an input or output.
VDD	14	12	P	Positive power supply. This pin is the most positive power-supply potential. For reliable operation, connect a decoupling capacitor ranging from 0.1µF to 10µF between V_{DD} and GND.
GND	15	13	P	Ground (0V) reference
A1	16	14	I	Address line 1. Controls the switch configuration as listed in Table 6-1.

(1) I = input, O = output, I/O = input and output, P = power

Copyright © 2024 Texas Instruments Incorporated

5 Specifications

5.1 Absolute Maximum Ratings

over operating free-air temperature range (unless otherwise noted)[1] [2] [3]

		MIN	MAX	UNIT
V_{DD}–V_{SS}	Supply voltage	–0.5	6	V
V_{DD}		–0.5	6	V
V_{SS}		–3.0	0.3	V
V_{SEL} or V_{EN}	Logic control input pin voltage (EN, A0, A1)	–0.5	6	V
I_{SEL} or I_{EN}	Logic control input pin current (EN, A0, A1)	–30	30	mA
V_S or V_D	Source or drain voltage (Sx, Dx)	–0.5	V_{DD}+0.5	V
I_S or $I_{D\ (CONT)}$	Source or drain continuous current (Sx, Dx)	IDC ± 10 %[4]	IDC ± 10 %[4]	mA
I_S or $I_{D\ (PEAK)}$	Source and drain peak current: (1 ms period max, 10% duty cycle maximum) (Sx, SxA, SxB, D, DA, DB)	Ipeak ± 10 %[4]	Ipeak ± 10 %[4]	mA
T_{stg}	Storage temperature	–65	150	°C
P_{tot}	Total power dissipation[5] [6]		500	mW
T_J	Junction temperature		150	°C

(1) Stresses beyond those listed under *Absolute Maximum Rating* may cause permanent damage to the device. These are stress ratings only, which do not imply functional operation of the device at these or any other conditions beyond those indicated under *Recommended Operating Condition*. Exposure to absolute-maximum-rated conditions for extended periods may affect device reliability.
(2) The algebraic convention, whereby the most negative value is a minimum and the most positive value is a maximum.
(3) All voltages are with respect to ground, unless otherwise specified.
(4) Refer to Recommended Operating Conditions for I_{DC} and I_{Peak} ratings.
(5) For TSSOP package: P_{tot} derates linearly above TA=90°C by 8.41mW/°C
(6) For QFN package: P_{tot} derates linearly above TA=82°C by 7.43mW/°C

5.2 ESD Ratings

			VALUE	UNIT
$V_{(ESD)}$	Electrostatic discharge	Human body model (HBM), per ANSI/ESDA/JEDEC JS-001, all pins[1]	±2000	V
		Charged device model (CDM), per JEDEC specification JESD22-C101, all pins[2]	±750	

(1) JEDEC document JEP155 states that 500-V HBM allows safe manufacturing with a standard ESD control process.
(2) JEDEC document JEP157 states that 250-V CDM allows safe manufacturing with a standard ESD control process.

5.3 Recommended Operating Conditions

over operating free-air temperature range (unless otherwise noted)

			MIN	NOM	MAX	UNIT
V_{DD}	Positive power supply voltage (single)		1.08		5.5	V
V_{SS}	Negative power supply voltage (dual)		-2.75		0	V
V_{DD} - V_{SS}	Supply rail voltage difference		1.08		5.5	V
V_S or V_D	Signal path input/output voltage (source or drain pin) (Sx, Dx)		V_{SS}		V_{DD}	V
V_{SEL} or V_{EN}	Logic control input pin voltage		0		5.5	V
T_A	Ambient temperature		–40		125	°C
I_{DC}	Continuous current through switch	Tj = 25°C		150		mA
		Tj = 85°C		120		mA
		Tj = 125°C		60		mA
		Tj = 130°C		50		mA

Copyright © 2024 Texas Instruments Incorporated

5.3 Recommended Operating Conditions (continued)

over operating free-air temperature range (unless otherwise noted)

			MIN	NOM	MAX	UNIT
I_{peak}	Peak current through switch(1 ms period max, 10% duty cycle maximum)	Tj = 25°C		300		mA
		Tj = 85°C		300		mA
		Tj = 125°C		180		mA
		Tj = 130°C		160		mA

5.4 Thermal Information

THERMAL METRIC[1]		TMUX1109		UNIT
		PW (TSSOP)	RSV (QFN)	
		16 PINS	16 PINS	
$R_{\theta JA}$	Junction-to-ambient thermal resistance	118.9	134.6	°C/W
$R_{\theta JC(top)}$	Junction-to-case (top) thermal resistance	49.3	74.3	°C/W
$R_{\theta JB}$	Junction-to-board thermal resistance	65.2	62.8	°C/W
Ψ_{JT}	Junction-to-top characterization parameter	7.6	4.3	°C/W
Ψ_{JB}	Junction-to-board characterization parameter	64.6	61.1	°C/W
$R_{\theta JC(bot)}$	Junction-to-case (bottom) thermal resistance	N/A	N/A	°C/W

(1) For more information about traditional and new thermal metrics, see the Semiconductor and IC Package Thermal Metrics application report.

5.5 Electrical Characteristics (V_{DD} = 5V ±10 %)

at T_A = 25°C, V_{DD} = 5V (unless otherwise noted)

PARAMETER		TEST CONDITIONS	TA	MIN	TYP	MAX	UNIT
ANALOG SWITCH							
R_{ON}	On-resistance	V_S = 0V to V_{DD} I_{SD} = 10mA Refer to On-Resistance	25°C		1.8	4	Ω
			–40°C to +85°C			4.5	Ω
			–40°C to +125°C			4.9	Ω
ΔR_{ON}	On-resistance matching between channels	V_S = 0V to V_{DD} I_{SD} = 10mA Refer to On-Resistance	25°C		0.18		Ω
			–40°C to +85°C			0.4	Ω
			–40°C to +125°C			0.5	Ω
$R_{ON\ FLAT}$	On-resistance flatness	V_S = 0V to V_{DD} I_{SD} = 10mA Refer to On-Resistance	25°C		0.85		Ω
			–40°C to +85°C			1.6	Ω
			–40°C to +125°C			1.6	Ω
$I_{S(OFF)}$	Source off leakage current[1]	V_{DD} = 5V Switch Off V_D = 4.5V / 1.5V V_S = 1.5V / 4.5V Refer to Off-Leakage Current	25°C	–0.08	±0.005	0.08	nA
			–40°C to +85°C	–0.3		0.3	nA
			–40°C to +125°C	–0.9		0.9	nA
$I_{D(OFF)}$	Drain off leakage current[1]	V_{DD} = 5V Switch Off V_D = 4.5V / 1.5V V_S = 1.5V / 4.5V Refer to Off-Leakage Current	25°C	–0.1	±0.01	0.1	nA
			–40°C to +85°C	–0.75		0.75	nA
			–40°C to +125°C	–3.5		3.5	nA
$I_{D(ON)}$ $I_{S(ON)}$	Channel on leakage current	V_{DD} = 5V Switch On V_D = V_S = 2.5V Refer to On-Leakage Current	25°C	–0.025	±0.003	0.025	nA
			–40°C to +85°C	–0.3		0.3	nA
			–40°C to +125°C	–0.75		0.75	nA

Copyright © 2024 Texas Instruments Incorporated

5.5 Electrical Characteristics (V_{DD} = 5V ±10 %) (continued)

at T_A = 25°C, V_{DD} = 5V (unless otherwise noted)

PARAMETER		TEST CONDITIONS	TA	MIN	TYP	MAX	UNIT
$I_{D(ON)}$ $I_{S(ON)}$	Channel on leakage current	V_{DD} = 5V Switch On V_D = V_S = 4.5V / 1.5V Refer to On-Leakage Current	25°C	–0.1	±0.01	0.1	nA
			–40°C to +85°C	–0.75		0.75	nA
			–40°C to +125°C	–3		3	nA
LOGIC INPUTS (EN, A0, A1)							
V_{IH}	Input logic high		–40°C to +125°C	1.49		5.5	V
V_{IL}	Input logic low			0		0.87	V
I_{IH} I_{IL}	Input leakage current		25°C		±0.005		µA
I_{IH} I_{IL}	Input leakage current		–40°C to +125°C			±0.05	µA
C_{IN}	Logic input capacitance		25°C		1		pF
			–40°C to +125°C			2	pF
POWER SUPPLY							
I_{DD}	V_{DD} supply current	Logic inputs = 0V or 5.5V	25°C		0.008		µA
			–40°C to +125°C			1	µA
DYNAMIC CHARACTERISTICS							
t_{TRAN}	Transition time between channels	V_S = 3V R_L = 200Ω, C_L = 15pF Refer to Transition Time	25°C		14		ns
			–40°C to +85°C			18	ns
			–40°C to +125°C			19	ns
t_{OPEN} (BBM)	Break before make time	V_S = 3V R_L = 200Ω, C_L = 15pF Refer to Break-Before-Make	25°C		8		ns
			–40°C to +85°C	1			ns
			–40°C to +125°C	1			ns
$t_{ON(EN)}$	Enable turn-on time	V_S = 3V R_L = 200Ω, C_L = 15pF Refer to tON(EN) and tOFF(EN)	25°C		12		ns
			–40°C to +85°C			19	ns
			–40°C to +125°C			20	ns
$t_{OFF(EN)}$	Enable turn-off time	V_S = 3V R_L = 200Ω, C_L = 15pF Refer to tON(EN) and tOFF(EN)	25°C		6		ns
			–40°C to +85°C			8	ns
			–40°C to +125°C			9	ns
Q_C	Charge Injection	V_S = 1V R_S = 0Ω, C_L = 1nF Refer to Charge Injection	25°C		–1		pC
O_{ISO}	Off Isolation	R_L = 50Ω, C_L = 5pF f = 1MHz Refer to Off Isolation	25°C		–65		dB
		R_L = 50Ω, C_L = 5pF f = 10MHz Refer to Off Isolation	25°C		–45		dB
X_{TALK}	Crosstalk	R_L = 50Ω, C_L = 5pF f = 1MHz Refer to Crosstalk	25°C		–90		dB
		R_L = 50Ω, C_L = 5pF f = 10MHz Refer to Crosstalk	25°C		–80		dB
BW	Bandwidth	R_L = 50Ω, C_L = 5pF Refer to Bandwidth	25°C		135		MHz
C_{SOFF}	Source off capacitance	f = 1MHz	25°C		7.5		pF
C_{DOFF}	Drain off capacitance	f = 1MHz	25°C		32		pF

Copyright © 2024 Texas Instruments Incorporated

5.5 Electrical Characteristics (V_{DD} = 5V ±10 %) (continued)

at T_A = 25°C, V_{DD} = 5V (unless otherwise noted)

PARAMETER		TEST CONDITIONS	TA	MIN	TYP	MAX	UNIT
C_{SON} C_{DON}	On capacitance	f = 1MHz	25°C		38		pF

(1) When V_S is 4.5V, V_D is 1.5V, and vice versa.

5.6 Electrical Characteristics (V_{DD} = 3.3V ±10 %)

at T_A = 25°C, V_{DD} = 3.3V (unless otherwise noted)

PARAMETER		TEST CONDITIONS	TA	MIN	TYP	MAX	UNIT
ANALOG SWITCH							
R_{ON}	On-resistance	V_S = 0V to V_{DD} I_{SD} = 10mA Refer to On-Resistance	25°C		4	8.75	Ω
			–40°C to +85°C			9.5	Ω
			–40°C to +125°C			9.75	Ω
ΔR_{ON}	On-resistance matching between channels	V_S = 0V to V_{DD} I_{SD} = 10mA Refer to On-Resistance	25°C		0.13		Ω
			–40°C to +85°C			0.4	Ω
			–40°C to +125°C			0.5	Ω
$R_{ON\ FLAT}$	On-resistance flatness	V_S = 0V to V_{DD} I_{SD} = 10mA Refer to On-Resistance	25°C		1.9		Ω
			–40°C to +85°C		2		Ω
			–40°C to +125°C		2.2		Ω
$I_{S(OFF)}$	Source off leakage current	V_{DD} = 3.3V Switch Off V_D = 3V / 1V V_S = 1V / 3V Refer to Off-Leakage Current	25°C	–0.05	±0.001	0.05	nA
			–40°C to +85°C	–0.1		0.1	nA
			–40°C to +125°C	–0.5		0.5	nA
$I_{D(OFF)}$	Drain off leakage current	V_{DD} = 3.3V Switch Off V_D = 3V / 1V V_S = 1V / 3V Refer to Off-Leakage Current	25°C	–0.1	±0.005	0.1	nA
			–40°C to +85°C	–0.5		0.5	nA
			–40°C to +125°C	–2		2	nA
$I_{D(ON)}$ $I_{S(ON)}$	Channel on leakage current	V_{DD} = 3.3V Switch On V_D = V_S = 3V / 1V Refer to On-Leakage Current	25°C	–0.1	±0.005	0.1	nA
			–40°C to +85°C	–0.5		0.5	nA
			–40°C to +125°C	–2		2	nA
LOGIC INPUTS (EN, A0, A1)							
V_{IH}	Input logic high		–40°C to +125°C	1.35		5.5	V
V_{IL}	Input logic low			0		0.8	V
I_{IH} I_{IL}	Input leakage current		25°C		±0.005		µA
I_{IH} I_{IL}	Input leakage current		–40°C to +125°C			±0.05	µA
C_{IN}	Logic input capacitance		25°C		1		pF
			–40°C to +125°C			2	pF
POWER SUPPLY							
I_{DD}	V_{DD} supply current	Logic inputs = 0V or 5.5V	25°C		0.006		µA
			–40°C to +125°C			1	µA
DYNAMIC CHARACTERISTICS							
t_{TRAN}	Transition time between channels	V_S = 2V R_L = 200Ω, C_L = 15pF Refer to Transition Time	25°C		15		ns
			–40°C to +85°C			23	ns
			–40°C to +125°C			23	ns

Copyright © 2024 Texas Instruments Incorporated

5.6 Electrical Characteristics (V_{DD} = 3.3V ±10 %) (continued)

at T_A = 25°C, V_{DD} = 3.3V (unless otherwise noted)

PARAMETER		TEST CONDITIONS	TA	MIN	TYP	MAX	UNIT
t_{OPEN} (BBM)	Break before make time	V_S = 2V R_L = 200Ω, C_L = 15pF Refer to Break-Before-Make	25°C		9		ns
			–40°C to +85°C	1			ns
			–40°C to +125°C	1			ns
$t_{ON(EN)}$	Enable turn-on time	V_S = 2V R_L = 200Ω, C_L = 15pF Refer to tON(EN) and tOFF(EN)	25°C		14		ns
			–40°C to +85°C			25	ns
			–40°C to +125°C			25	ns
$t_{OFF(EN)}$	Enable turn-off time	V_S = 2V R_L = 200Ω, C_L = 15pF Refer to tON(EN) and tOFF(EN)	25°C		7		ns
			–40°C to +85°C			12	ns
			–40°C to +125°C			12	ns
Q_C	Charge Injection	V_S = 1V R_S = 0Ω, C_L = 1nF Refer to Charge Injection	25°C		–1		pC
O_{ISO}	Off Isolation	R_L = 50Ω, C_L = 5pF f = 1MHz Refer to Off Isolation	25°C		–65		dB
		R_L = 50Ω, C_L = 5pF f = 10MHz Refer to Off Isolation	25°C		–45		dB
X_{TALK}	Crosstalk	R_L = 50Ω, C_L = 5pF f = 1MHz Refer to Crosstalk	25°C		–90		dB
		R_L = 50Ω, C_L = 5pF f = 10MHz Refer to Crosstalk	25°C		–80		dB
BW	Bandwidth	R_L = 50Ω, C_L = 5pF Refer to Bandwidth	25°C		135		MHz
C_{SOFF}	Source off capacitance	f = 1MHz	25°C		7		pF
C_{DOFF}	Drain off capacitance	f = 1MHz	25°C		32		pF
C_{SON} C_{DON}	On capacitance	f = 1MHz	25°C		38		pF

5.7 Electrical Characteristics (V_{DD} = 2.5V ±10 %), (V_{SS} = –2.5V ±10 %)

at T_A = 25°C, V_{DD} = +2.5V, V_{SS} = –2.5V (unless otherwise noted)

PARAMETER		TEST CONDITIONS	TA	MIN	TYP	MAX	UNIT
ANALOG SWITCH							
R_{ON}	On-resistance	V_S = V_{SS} to V_{DD} I_{SD} = 10mA Refer to On-Resistance	25°C		1.8	4	Ω
			–40°C to +85°C			4.5	Ω
			–40°C to +125°C			4.9	Ω
ΔR_{ON}	On-resistance matching between channels	V_S = V_{SS} to V_{DD} I_{SD} = 10mA Refer to On-Resistance	25°C		0.18		Ω
			–40°C to +85°C			0.4	Ω
			–40°C to +125°C			0.5	Ω
$R_{ON\ FLAT}$	On-resistance flatness	V_S = V_{SS} to V_{DD} I_{SD} = 10mA Refer to On-Resistance	25°C		0.85		Ω
			–40°C to +85°C			1.6	Ω
			–40°C to +125°C			1.6	Ω
$I_{S(OFF)}$	Source off leakage current	V_{DD} = +2.5V, V_{SS} = –2.5V Switch Off V_D = +2V / –1V V_S = –1V / +2V Refer to Off-Leakage Current	25°C	–0.08	±0.005	0.08	nA
			–40°C to +85°C	–0.3		0.3	nA
			–40°C to +125°C	–0.9		0.9	nA

Copyright © 2024 Texas Instruments Incorporated

5.7 Electrical Characteristics (V_{DD} = 2.5V ±10 %), (V_{SS} = –2.5V ±10 %) (continued)

at T_A = 25°C, V_{DD} = +2.5V, V_{SS} = –2.5V (unless otherwise noted)

PARAMETER		TEST CONDITIONS	TA	MIN	TYP	MAX	UNIT
$I_{D(OFF)}$	Drain off leakage current	V_{DD} = +2.5V, V_{SS} = –2.5V Switch Off V_D = +2V / –1V V_S = –1V / +2V Refer to Off-Leakage Current	25°C	–0.1	±0.01	0.1	nA
			–40°C to +85°C	–0.75		0.75	nA
			–40°C to +125°C	–3.5		3.5	nA
$I_{D(ON)}$ $I_{S(ON)}$	Channel on leakage current	V_{DD} = +2.5V, V_{SS} = –2.5V Switch On V_D = V_S = +2V / –1V Refer to On-Leakage Current	25°C	–0.1	±0.01	0.1	nA
			–40°C to +85°C	–0.75		0.75	nA
			–40°C to +125°C	–3		3	nA
LOGIC INPUTS (EN, A0, A1)							
V_{IH}	Input logic high		–40°C to +125°C	1.2		2.75	V
V_{IL}	Input logic low			0		0.73	V
I_{IH} I_{IL}	Input leakage current		25°C		±0.005		µA
I_{IH} I_{IL}	Input leakage current		–40°C to +125°C			±0.05	µA
C_{IN}	Logic input capacitance		25°C		1		pF
			–40°C to +125°C			2	pF
POWER SUPPLY							
I_{DD}	V_{DD} supply current	Logic inputs = 0V or 2.75V	25°C		0.008		µA
			–40°C to +125°C			1	µA
I_{SS}	V_{SS} supply current	Logic inputs = 0V or 2.75V	25°C		0.008		µA
			–40°C to +125°C			1	µA
DYNAMIC CHARACTERISTICS							
t_{TRAN}	Transition time between channels	V_S = 1.5V R_L = 200Ω, C_L = 15pF Refer to Transition Time	25°C		14		ns
			–40°C to +85°C			21	ns
			–40°C to +125°C			21	ns
t_{OPEN} (BBM)	Break before make time	V_S = 1.5V R_L = 200Ω, C_L = 15pF Refer to Break-Before-Make	25°C		8		ns
			–40°C to +85°C	1			ns
			–40°C to +125°C	1			ns
$t_{ON(EN)}$	Enable turn-on time	V_S = 1.5V R_L = 200Ω, C_L = 15pF Refer to tON(EN) and tOFF(EN)	25°C		14		ns
			–40°C to +85°C			21	ns
			–40°C to +125°C			22	ns
$t_{OFF(EN)}$	Enable turn-off time	V_S = 1.5V R_L = 200Ω, C_L = 15pF Refer to tON(EN)and tOFF(EN)	25°C		8		ns
			–40°C to +85°C			11	ns
			–40°C to +125°C			12	ns
Q_C	Charge Injection	V_S = –1V R_S = 0Ω, C_L = 1nF Refer to Charge Injection	25°C		–1		pC
O_{ISO}	Off Isolation	R_L = 50Ω, C_L = 5pF f = 1MHz Refer to Off Isolation	25°C		–65		dB
		R_L = 50Ω, C_L = 5pF f = 10MHz Refer to Off Isolation	25°C		–45		dB

5.7 Electrical Characteristics (V_{DD} = 2.5V ±10 %), (V_{SS} = –2.5V ±10 %) (continued)

at T_A = 25°C, V_{DD} = +2.5V, V_{SS} = –2.5V (unless otherwise noted)

PARAMETER		TEST CONDITIONS	TA	MIN	TYP	MAX	UNIT
X_{TALK}	Crosstalk	R_L = 50Ω, C_L = 5pF f = 1MHz Refer to Crosstalk	25°C		–90		dB
		R_L = 50Ω, C_L = 5pF f = 10MHz Refer to Crosstalk	25°C		–80		dB
BW	Bandwidth	R_L = 50Ω, C_L = 5pF Refer to Bandwidth	25°C		135		MHz
C_{SOFF}	Source off capacitance	f = 1MHz	25°C		7		pF
C_{DOFF}	Drain off capacitance	f = 1MHz	25°C		32		pF
C_{SON} C_{DON}	On capacitance	f = 1MHz	25°C		38		pF

5.8 Electrical Characteristics (V_{DD} = 1.8V ±10 %)

at T_A = 25°C, V_{DD} = 1.8V (unless otherwise noted)

PARAMETER		TEST CONDITIONS	TA	MIN	TYP	MAX	UNIT
ANALOG SWITCH							
R_{ON}	On-resistance	V_S = 0V to V_{DD} I_{SD} = 10mA Refer to On-Resistance	25°C		40		Ω
			–40°C to +85°C			80	Ω
			–40°C to +125°C			80	Ω
ΔR_{ON}	On-resistance matching between channels	V_S = 0V to V_{DD} I_{SD} = 10mA Refer to On-Resistance	25°C		0.4		Ω
			–40°C to +85°C			1.5	Ω
			–40°C to +125°C			1.5	Ω
$I_{S(OFF)}$	Source off leakage current	V_{DD} = 1.98V Switch Off V_D = 1.62V / 1V V_S = 1V / 1.62V Refer to Off-Leakage Current	25°C	–0.05	±0.003	0.05	nA
			–40°C to +85°C	–0.1		0.1	nA
			–40°C to +125°C	–0.5		0.5	nA
$I_{D(OFF)}$	Drain off leakage current	V_{DD} = 1.98V Switch Off V_D = 1.62V / 1V V_S = 1V / 1.62V Refer to Off-Leakage Current	25°C	–0.1	±0.005	0.1	nA
			–40°C to +85°C	–0.5		0.5	nA
			–40°C to +125°C	–2		2	nA
$I_{D(ON)}$ $I_{S(ON)}$	Channel on leakage current	V_{DD} = 1.98V Switch On V_D = V_S = 1.62V / 1V Refer to On-Leakage Current	25°C	–0.1	±0.005	0.1	nA
			–40°C to +85°C	–0.5		0.5	nA
			–40°C to +125°C	–2		2	nA
LOGIC INPUTS (EN, A0, A1)							
V_{IH}	Input logic high		–40°C to +125°C	1.07		5.5	V
V_{IL}	Input logic low			0		0.68	V
I_{IH} I_{IL}	Input leakage current		25°C		±0.005		µA
I_{IH} I_{IL}	Input leakage current		–40°C to +125°C			±0.05	µA
C_{IN}	Logic input capacitance		25°C		1		pF
			–40°C to +125°C			2	pF
POWER SUPPLY							
I_{DD}	V_{DD} supply current	Logic inputs = 0V or 5.5V	25°C		0.001		µA
			–40°C to +125°C			0.85	µA

Copyright © 2024 Texas Instruments Incorporated

5.8 Electrical Characteristics (V_{DD} = 1.8V ±10 %) (continued)

at T_A = 25°C, V_{DD} = 1.8V (unless otherwise noted)

PARAMETER		TEST CONDITIONS	TA	MIN	TYP	MAX	UNIT
DYNAMIC CHARACTERISTICS							
t_{TRAN}	Transition time between channels	V_S = 1V R_L = 200Ω, C_L = 15pF Refer to Transition Time	25°C		28		ns
			–40°C to +85°C			48	ns
			–40°C to +125°C			48	ns
t_{OPEN} (BBM)	Break before make time	V_S = 1V R_L = 200Ω, C_L = 15pF Refer to Break-Before-Make	25°C		16		ns
			–40°C to +85°C	1			ns
			–40°C to +125°C	1			ns
$t_{ON(EN)}$	Enable turn-on time	V_S = 1V R_L = 200Ω, C_L = 15pF Refer to tON(EN) and tOFF(EN)	25°C		28		ns
			–40°C to +85°C			48	ns
			–40°C to +125°C			48	ns
$t_{OFF(EN)}$	Enable turn-off time	V_S = 1V R_L = 200Ω, C_L = 15pF Refer to tON(EN) and tOFF(EN)	25°C		16		ns
			–40°C to +85°C			27	ns
			–40°C to +125°C			27	ns
Q_C	Charge Injection	V_S = 1V R_S = 0Ω, C_L = 1nF Refer to Charge Injection	25°C		–0.5		pC
O_{ISO}	Off Isolation	R_L = 50Ω, C_L = 5pF f = 1MHz Refer to Off Isolation	25°C		–65		dB
		R_L = 50Ω, C_L = 5pF f = 10MHz Refer to Off Isolation	25°C		–45		dB
X_{TALK}	Crosstalk	R_L = 50Ω, C_L = 5pF f = 1MHz Refer to Crosstalk	25°C		–90		dB
		R_L = 50Ω, C_L = 5pF f = 10MHz Refer to Crosstalk	25°C		–80		dB
BW	Bandwidth	R_L = 50Ω, C_L = 5pF Refer to Bandwidth	25°C		135		MHz
C_{SOFF}	Source off capacitance	f = 1MHz	25°C		7		pF
C_{DOFF}	Drain off capacitance	f = 1MHz	25°C		32		pF
C_{SON} C_{DON}	On capacitance	f = 1MHz	25°C		38		pF

5.9 Electrical Characteristics (V_{DD} = 1.2V ±10 %)

PARAMETER		TEST CONDITIONS	TA	MIN	TYP	MAX	UNIT
ANALOG SWITCH							
R_{ON}	On-resistance	V_S = 0V to V_{DD} I_{SD} = 10mA Refer to On-Resistance	25°C		70		Ω
			–40°C to +85°C			105	Ω
			–40°C to +125°C			105	Ω
ΔR_{ON}	On-resistance matching between channels	V_S = 0V to V_{DD} I_{SD} = 10mA Refer to On-Resistance	25°C		0.4		Ω
			–40°C to +85°C			1.5	Ω
			–40°C to +125°C			1.5	Ω
$I_{S(OFF)}$	Source off leakage current[(1)]	V_{DD} = 1.32V Switch Off V_D = 1V / 0.8V V_S = 0.8V / 1V Refer to Off-Leakage Current	25°C	–0.05	±0.003	0.05	nA
			–40°C to +85°C	–0.1		0.1	nA
			–40°C to +125°C	–0.5		0.5	nA

Copyright © 2024 Texas Instruments Incorporated

5.9 Electrical Characteristics (V_{DD} = 1.2V ±10 %) (continued)

PARAMETER		TEST CONDITIONS	TA	MIN	TYP	MAX	UNIT
$I_{D(OFF)}$	Drain off leakage current[1]	V_{DD} = 1.32V Switch Off V_D = 1V / 0.8V V_S = 0.8V / 1V Refer to Off-Leakage Current	25°C	–0.1	±0.005	0.1	nA
			–40°C to +85°C	–0.5		0.5	nA
			–40°C to +125°C	–2		2	nA
$I_{D(ON)}$ $I_{S(ON)}$	Channel on leakage current	V_{DD} = 1.32V Switch On V_D = V_S = 1V / 0.8V Refer to On-Leakage Current	25°C	–0.1	±0.005	0.1	nA
			–40°C to +85°C	–0.5		0.5	nA
			–40°C to +125°C	–2		2	nA
LOGIC INPUTS (EN, A0, A1)							
V_{IH}	Input logic high		–40°C to +125°C	0.96		5.5	V
V_{IL}	Input logic low			0		0.36	V
I_{IH} I_{IL}	Input leakage current		25°C		±0.005		µA
I_{IH} I_{IL}	Input leakage current		–40°C to +125°C			±0.05	µA
C_{IN}	Logic input capacitance		25°C		1		pF
			–40°C to +125°C			2	pF
POWER SUPPLY							
I_{DD}	V_{DD} supply current	Logic inputs = 0V or 5.5V	25°C		0.001		µA
			–40°C to +125°C			0.7	µA
DYNAMIC CHARACTERISTICS							
t_{TRAN}	Transition time between channels	V_S = 1V R_L = 200Ω, C_L = 15pF Refer to Transition Time	25°C		60		ns
			–40°C to +85°C			210	ns
			–40°C to +125°C			210	ns
t_{OPEN} (BBM)	Break before make time	V_S = 1V R_L = 200Ω, C_L = 15pF Refer to Break-Before-Make	25°C		28		ns
			–40°C to +85°C	1			ns
			–40°C to +125°C	1			ns
$t_{ON(EN)}$	Enable turn-on time	V_S = 1V R_L = 200Ω, C_L = 15pF Refer to tON(EN) and tOFF(EN)	25°C		60		ns
			–40°C to +85°C			190	ns
			–40°C to +125°C			190	ns
$t_{OFF(EN)}$	Enable turn-off time	V_S = 1V R_L = 200Ω, C_L = 15pF Refer to tON(EN) and tOFF(EN)	25°C		45		ns
			–40°C to +85°C			150	ns
			–40°C to +125°C			150	ns
Q_C	Charge Injection	V_S = 1V R_S = 0Ω, C_L = 1nF Refer to Charge Injection	25°C		–0.5		pC
O_{ISO}	Off Isolation	R_L = 50Ω, C_L = 5pF f = 1MHz Refer to Off Isolation	25°C		–65		dB
		R_L = 50Ω, C_L = 5pF f = 10MHz Refer to Off Isolation	25°C		–45		dB
X_{TALK}	Crosstalk	R_L = 50Ω, C_L = 5pF f = 1MHz Refer to Crosstalk	25°C		–90		dB
		R_L = 50Ω, C_L = 5pF f = 10MHz Refer to Crosstalk	25°C		–80		dB
BW	Bandwidth	R_L = 50Ω, C_L = 5pF Refer to Bandwidth	25°C		135		MHz

Copyright © 2024 Texas Instruments Incorporated

5.9 Electrical Characteristics (V_{DD} = 1.2V ±10 %) (continued)

PARAMETER		TEST CONDITIONS	TA	MIN	TYP	MAX	UNIT
C_{SOFF}	Source off capacitance	f = 1MHz	25°C		7		pF
C_{DOFF}	Drain off capacitance	f = 1MHz	25°C		32		pF
C_{SON} C_{DON}	On capacitance	f = 1MHz	25°C		38		pF

(1) When V_S is 1V, V_D is 0.8V, and vice versa.

Typical Characteristics

at T_A = 25°C, V_{DD} = 5V (unless otherwise noted)

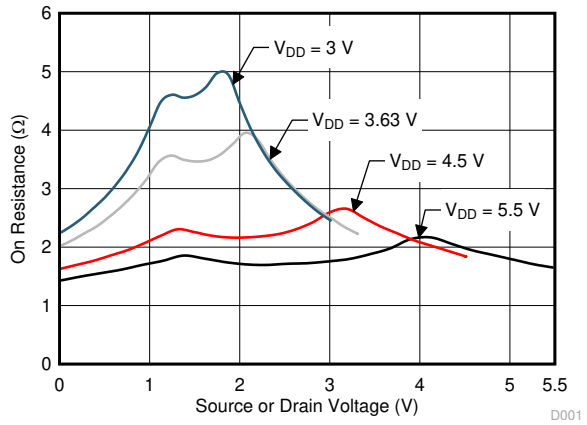

T_A = 25°C

Figure 5-1. On-Resistance vs Source or Drain Voltage

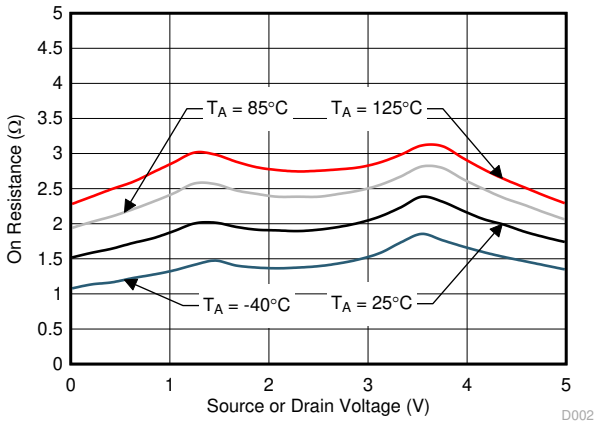

V_{DD} = 5V

Figure 5-2. On-Resistance vs Temperature

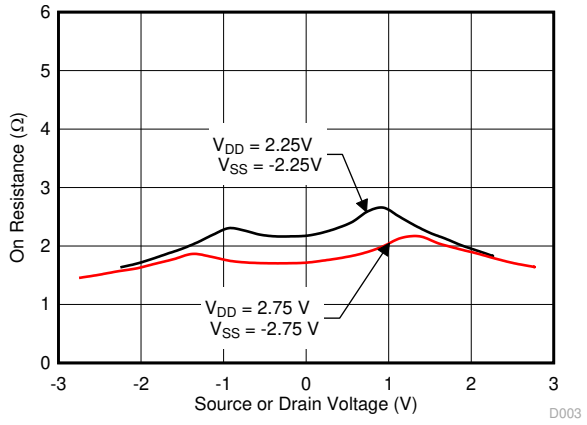

T_A = 25°C

Figure 5-3. On-Resistance vs Source or Drain Voltage

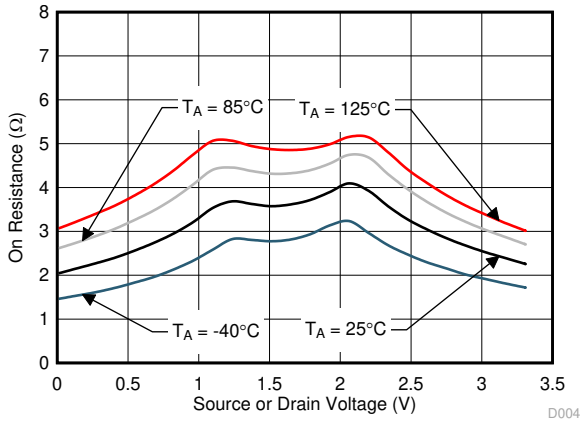

V_{DD} = 3.3V

Figure 5-4. On-Resistance vs Temperature

Typical Characteristics

at T_A = 25°C, V_{DD} = 5V (unless otherwise noted)

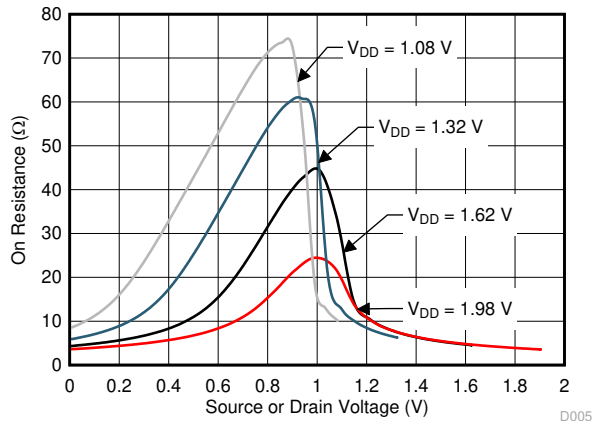

T_A = 25°C

Figure 5-5. On-Resistance vs Source or Drain Voltage

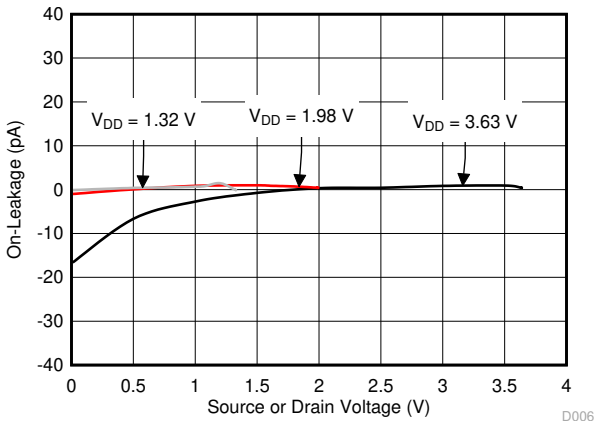

T_A = 25°C

Figure 5-6. On-Leakage vs Source or Drain Voltage

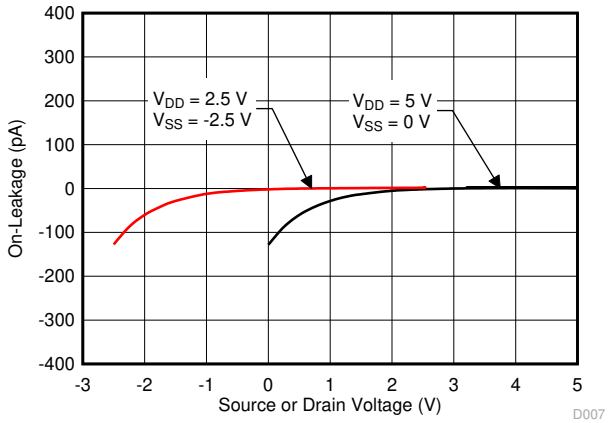

T_A = 25°C

Figure 5-7. On-Leakage vs Source or Drain Voltage

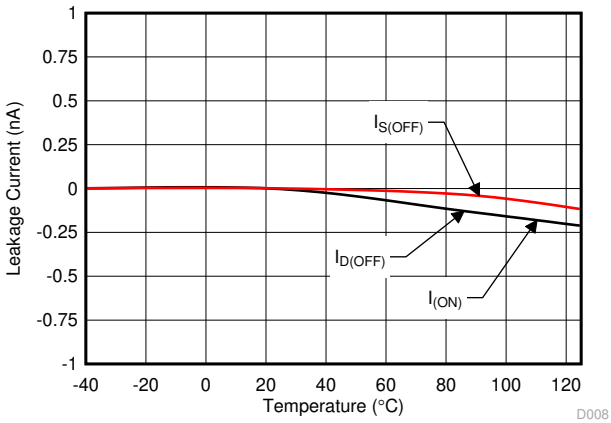

V_{DD} = 3.3V

Figure 5-8. Leakage Current vs Temperature

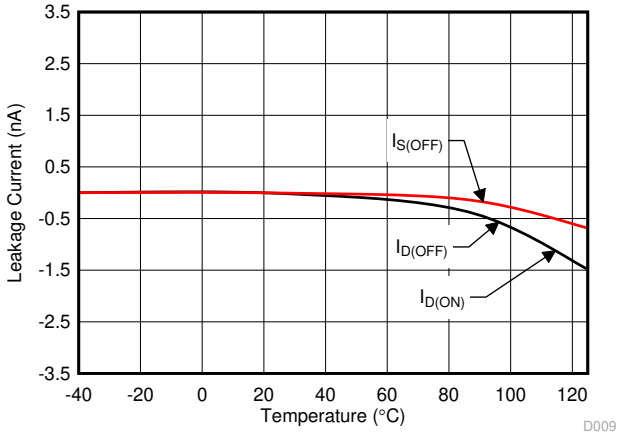

V_{DD} = 5V

Figure 5-9. Leakage Current vs Temperature

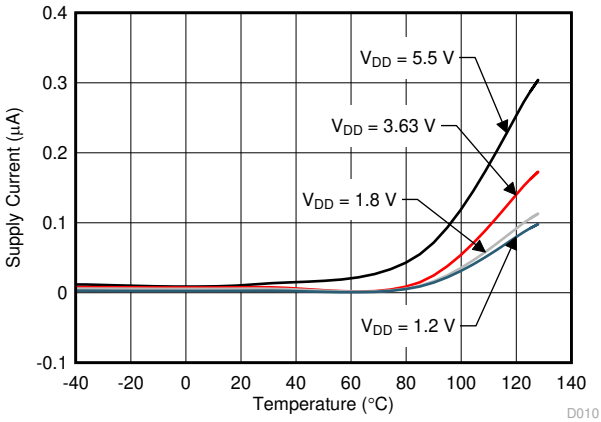

V_{SEL} = 5.5V

Figure 5-10. Supply Current vs Temperature

Copyright © 2024 Texas Instruments Incorporated

Typical Characteristics

at T_A = 25°C, V_{DD} = 5V (unless otherwise noted)

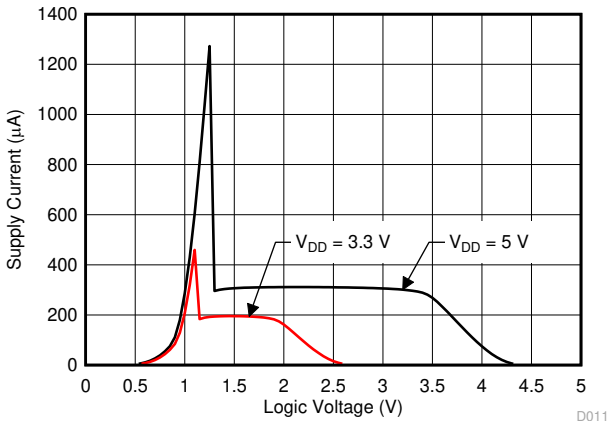

T_A = 25°C

Figure 5-11. Supply Current vs Logic Voltage

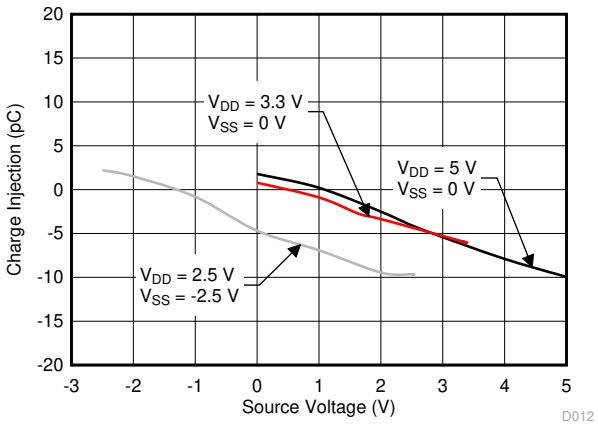

T_A = -40°C to 125°C

Figure 5-12. Charge Injection vs Source or Drain Voltage

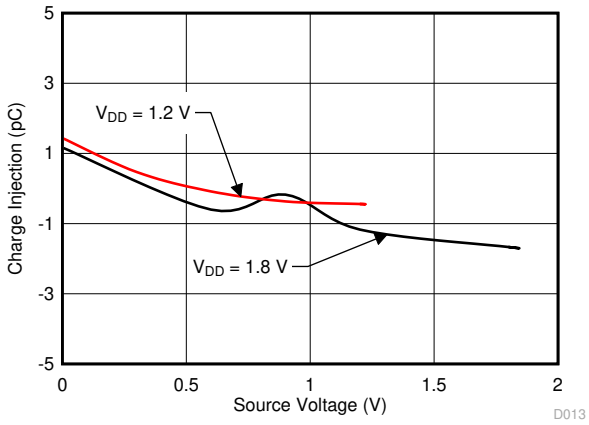

T_A = 25°C

Figure 5-13. Charge Injection vs Source or Drain Voltage

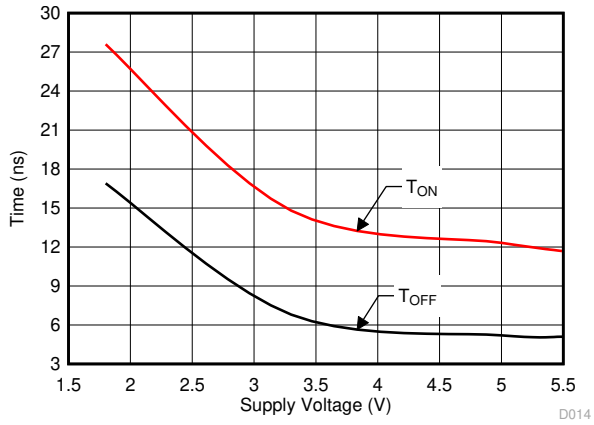

T_A = 25°C

Figure 5-14. $T_{ON\ (EN)}$ and $T_{OFF\ (EN)}$ vs Supply Voltage

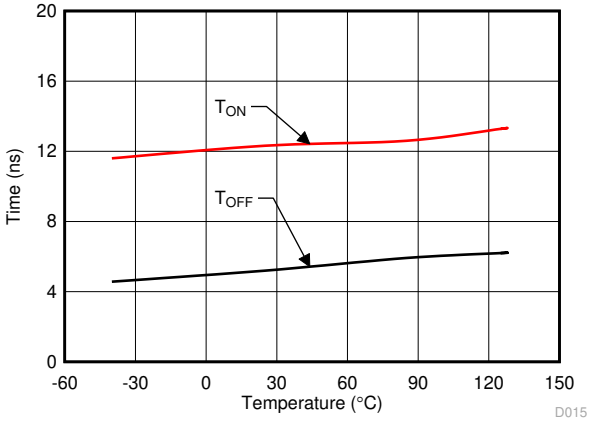

V_{DD} = 5V

Figure 5-15. $T_{ON\ (EN)}$ and $T_{OFF\ (EN)}$ vs Temperature

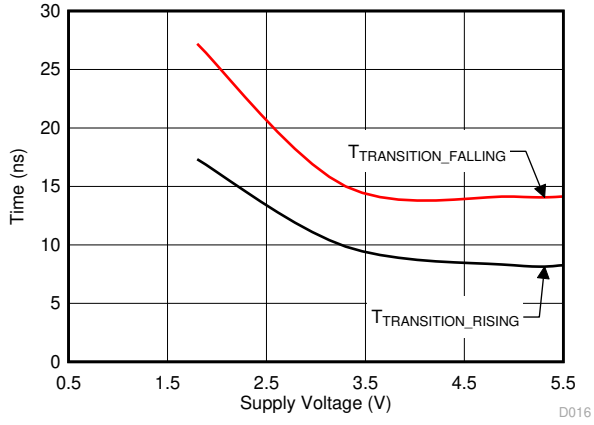

T_A = 25°C

Figure 5-16. $T_{TRANSITION}$ vs Supply Voltage

Typical Characteristics

at T_A = 25°C, V_{DD} = 5V (unless otherwise noted)

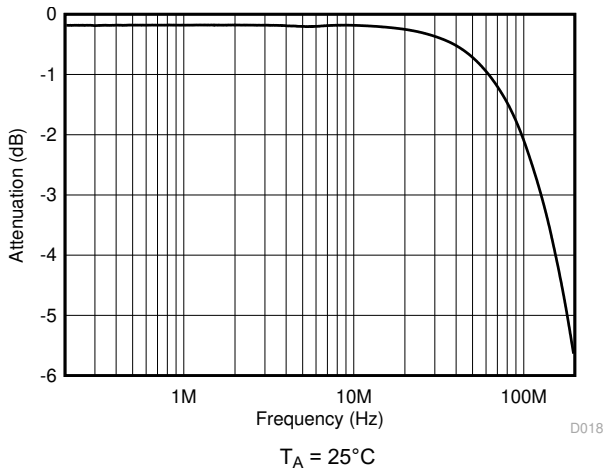

Figure 5-17. Frequency Response

Copyright © 2024 Texas Instruments Incorporated

6 Detailed Description

6.1 Overview

6.1.1 On-Resistance

The on-resistance of a device is the ohmic resistance between the source (Sx) and drain (D) pins of the device. The on-resistance varies with input voltage and supply voltage. The symbol R_{ON} is used to denote on-resistance. The measurement setup used to measure R_{ON} is shown in Figure 6-1. Voltage (V) and current (I_{SD}) are measured using this setup, and R_{ON} is computed with $R_{ON} = V / I_{SD}$:

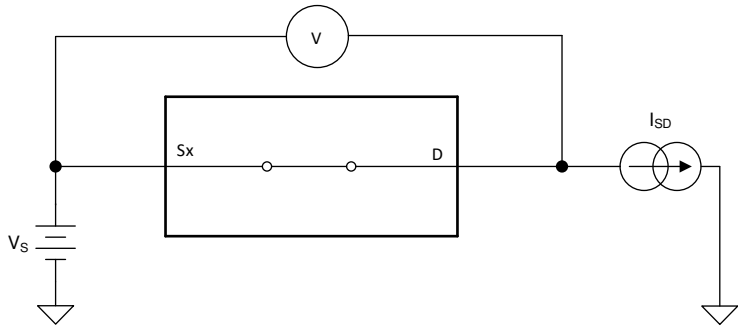

Figure 6-1. On-Resistance Measurement Setup

6.1.2 Off-Leakage Current

There are two types of leakage currents associated with a switch during the off state:

1. Source off-leakage current
2. Drain off-leakage current

Source leakage current is defined as the leakage current flowing into or out of the source pin when the switch is off. This current is denoted by the symbol $I_{S(OFF)}$.

Drain leakage current is defined as the leakage current flowing into or out of the drain pin when the switch is off. This current is denoted by the symbol $I_{D(OFF)}$.

The setup used to measure both off-leakage currents is shown in Figure 6-2.

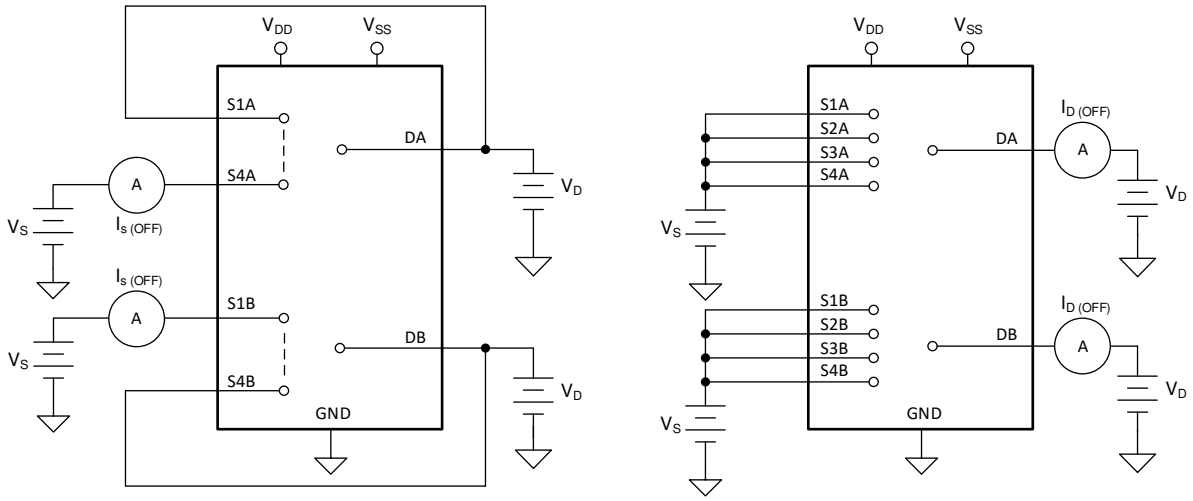

Figure 6-2. Off-Leakage Measurement Setup

6.1.3 On-Leakage Current

Source on-leakage current is defined as the leakage current flowing into or out of the source pin when the switch is on. This current is denoted by the symbol $I_{S(ON)}$.

Drain on-leakage current is defined as the leakage current flowing into or out of the drain pin when the switch is on. This current is denoted by the symbol $I_{D(ON)}$.

Either the source pin or drain pin is left floating during the measurement. Figure 6-3 shows the circuit used for measuring the on-leakage current, denoted by $I_{S(ON)}$ or $I_{D(ON)}$.

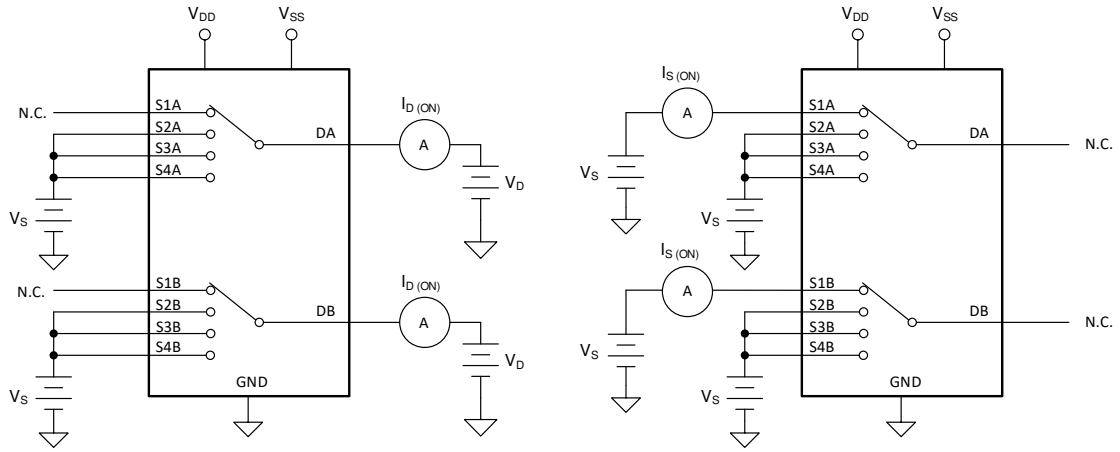

Figure 6-3. On-Leakage Measurement Setup

6.1.4 Transition Time

Transition time is defined as the time taken by the output of the device to rise or fall 10% after the address signal has risen or fallen past the logic threshold. The 10% transition measurement is utilized to provide the timing of the device, system level timing can then account for the time constant added from the load resistance and load capacitance. Figure 6-4 shows the setup used to measure transition time, denoted by the symbol $t_{TRANSITION}$.

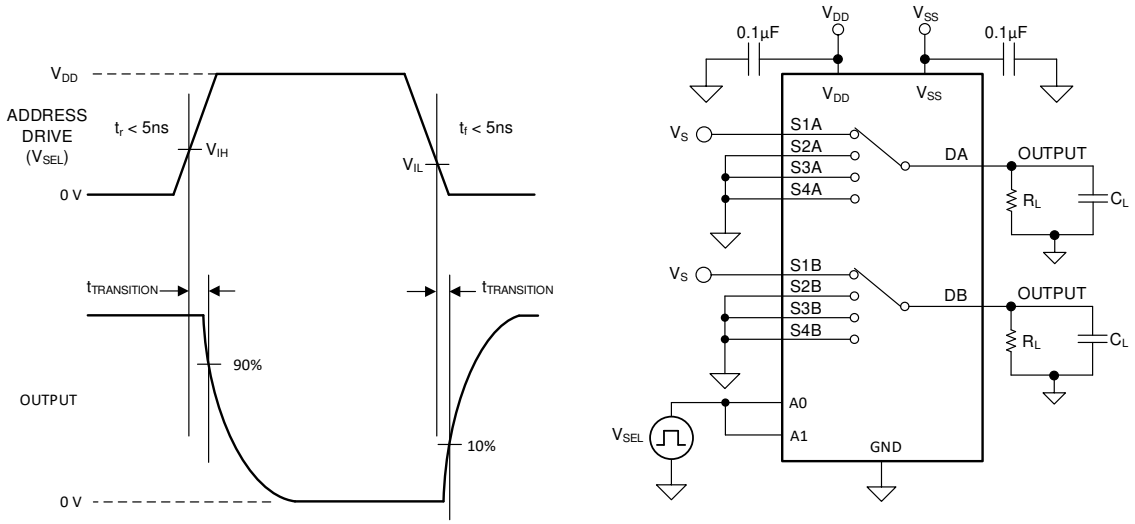

Figure 6-4. Transition-Time Measurement Setup

Copyright © 2024 Texas Instruments Incorporated

6.1.5 Break-Before-Make

Break-before-make delay is a safety feature that prevents two inputs from connecting when the device is switching. The output first breaks from the on-state switch before making the connection with the next on-state switch. The time delay between the *break* and the *make* is known as break-before-make delay. Figure 6-5 shows the setup used to measure break-before-make delay, denoted by the symbol $t_{OPEN(BBM)}$.

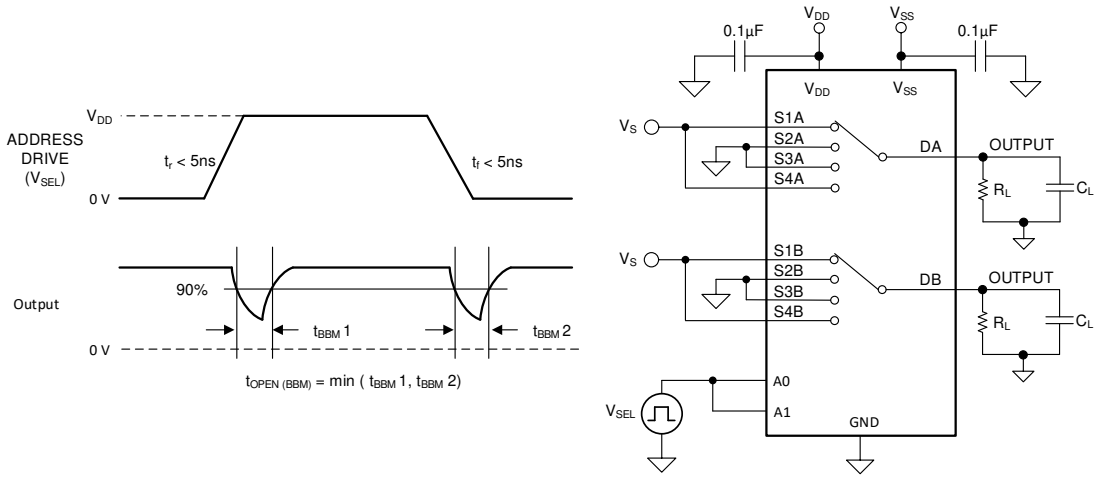

Figure 6-5. Break-Before-Make Delay Measurement Setup

6.1.6 $t_{ON(EN)}$ and $t_{OFF(EN)}$

Turn-on time is defined as the time taken by the output of the device to rise to 10% after the enable has risen past the logic threshold. The 10% measurement is utilized to provide the timing of the device, system level timing can then account for the time constant added from the load resistance and load capacitance. Figure 6-6 shows the setup used to measure turn-on time, denoted by the symbol $t_{ON(EN)}$.

Turn-off time is defined as the time taken by the output of the device to fall to 90% after the enable has fallen past the logic threshold. The 90% measurement is utilized to provide the timing of the device, system level timing can then account for the time constant added from the load resistance and load capacitance. Figure 6-6 shows the setup used to measure turn-off time, denoted by the symbol $t_{OFF(EN)}$.

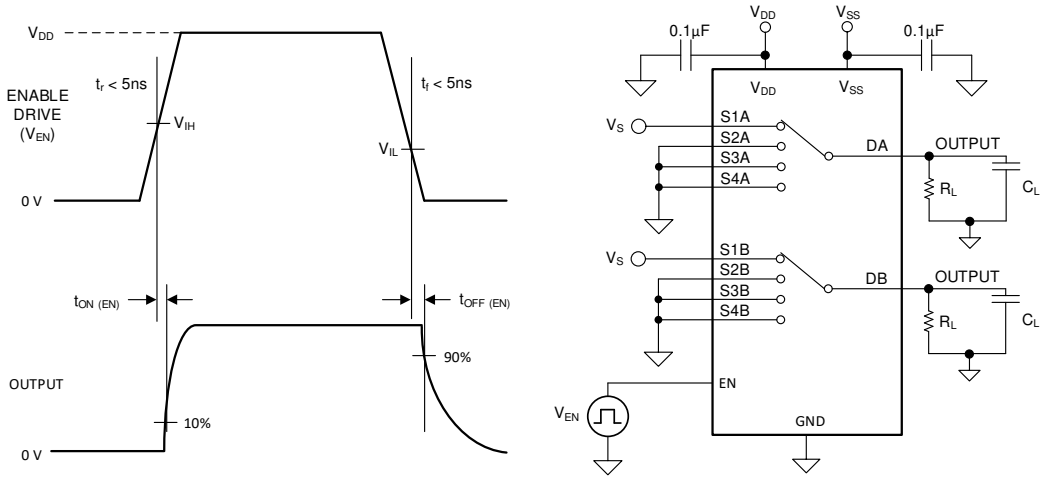

Figure 6-6. Turn-On and Turn-Off Time Measurement Setup

6.1.7 Charge Injection

The TMUX1109 has a transmission-gate topology. Any mismatch in capacitance between the NMOS and PMOS transistors results in a charge injected into the drain or source during the falling or rising edge of the gate signal. The amount of charge injected into the source or drain of the device is known as charge injection, and is denoted by the symbol Q_C. Figure 6-7 shows the setup used to measure charge injection from source (Sx) to drain (D).

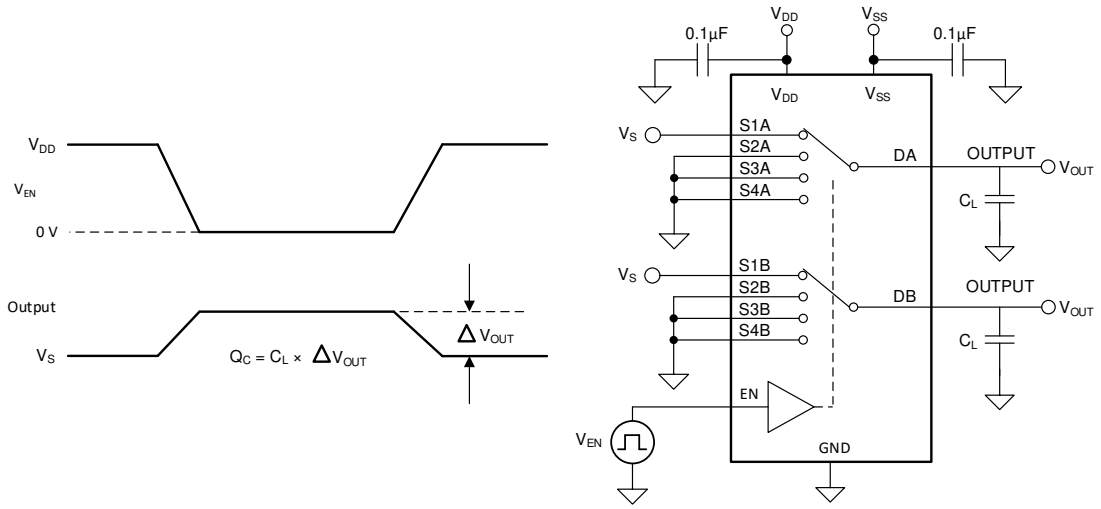

Figure 6-7. Charge-Injection Measurement Setup

6.1.8 Off Isolation

Off isolation is defined as the ratio of the signal at the drain pin (D) of the device when a signal is applied to the source pin (Sx) of an off-channel. Figure 6-8 shows the setup used to measure and the equation used to compute off isolation.

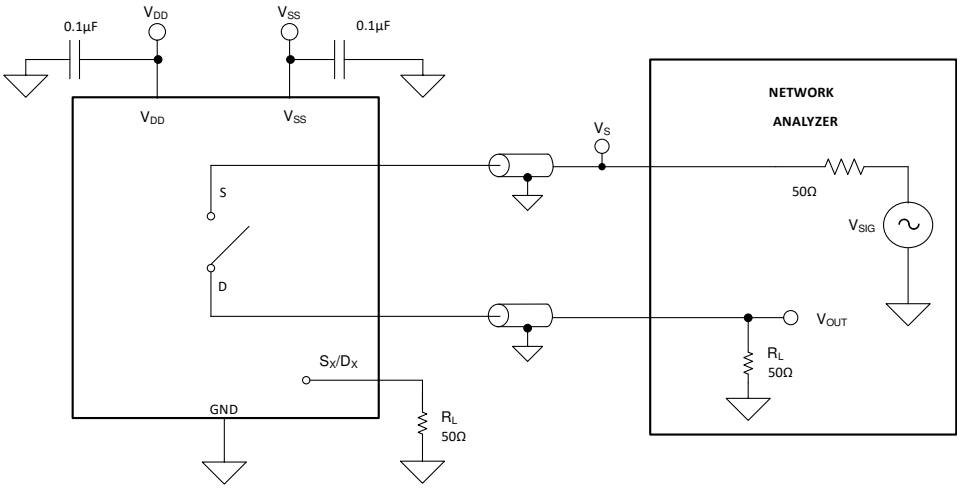

Figure 6-8. Off Isolation Measurement Setup

$$\text{Off Isolation} = 20 \cdot \text{Log}\left(\frac{V_{OUT}}{V_S}\right) \tag{1}$$

Copyright © 2024 Texas Instruments Incorporated

6.1.9 Crosstalk

Crosstalk is defined as the ratio of the signal at the drain pin (D) of a different channel, when a signal is applied at the source pin (Sx) of an on-channel. Figure 6-9 shows the setup used to measure, and the equation used to compute crosstalk.

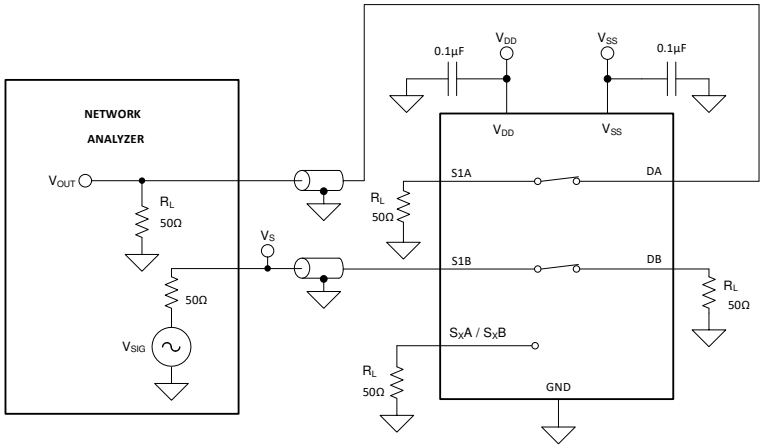

Figure 6-9. Crosstalk Measurement Setup

$$\text{Channel-to-Channel Crosstalk} = 20 \cdot \text{Log}\left(\frac{V_{OUT}}{V_S}\right) \tag{2}$$

6.1.10 Bandwidth

Bandwidth is defined as the range of frequencies that are attenuated by less than 3 dB when the input is applied to the source pin (Sx) of an on-channel, and the output is measured at the drain pin (D) of the device. Figure 6-10 shows the setup used to measure bandwidth.

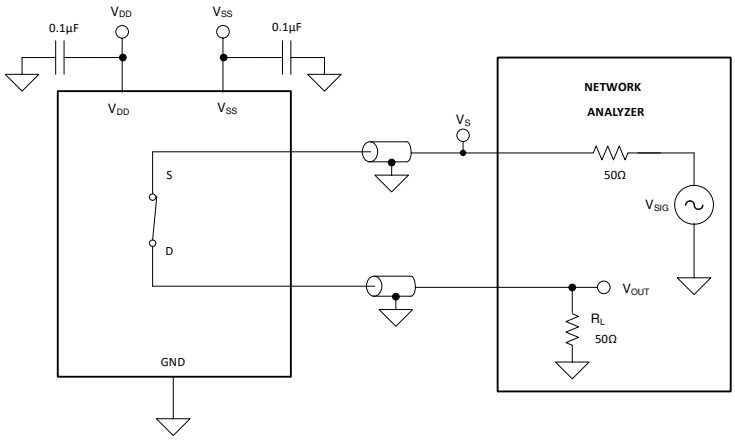

Figure 6-10. Bandwidth Measurement Setup

6.2 Functional Block Diagram

The TMUX1109 is an 4:1, differential (2-channel), multiplexer. Each switch is turned on or off based on the state of the address lines and enable pin.

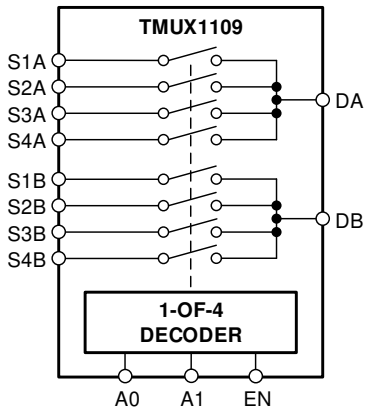

Figure 6-11. TMUX1109 Functional Block Diagram

6.3 Feature Description

6.3.1 Bidirectional Operation

The TMUX1109 conducts equally well from source (Sx) to drain (Dx) or from drain (Dx) to source (Sx). Each channel has very similar characteristics in both directions and supports both analog and digital signals.

6.3.2 Rail to Rail Operation

The valid signal path input/output voltage for TMUX1109 ranges from V_{SS} to V_{DD}.

6.3.3 1.8V Logic Compatible Inputs

The TMUX1109 has 1.8-V logic compatible control for all logic control inputs. The logic input thresholds scale with supply but still provide 1.8-V logic control when operating at 5.5V supply voltage. 1.8-V logic level inputs allows the TMUX1109 to interface with processors that have lower logic I/O rails and eliminates the need for an external translator, which saves both space and BOM cost. For more information on 1.8V logic implementations refer to *Simplifying Design with 1.8V logic Muxes and Switches*

6.3.4 Fail-Safe Logic

The TMUX1109 supports Fail-Safe Logic on the control input pins (EN, A0, A1) allowing for operation up to 5.5V above V_{SS}, regardless of the state of the supply pin. This feature allows voltages on the control pins to be applied before the supply pin, protecting the device from potential damage. Fail-Safe Logic minimizes system complexity by removing the need for power supply sequencing on the logic control pins. For example, the Fail-Safe Logic feature allows the select pins of the TMUX1109 to be ramped to 5.5V while V_{DD} = 0V. Additionally, the feature enables operation of the TMUX1109 with V_{DD} = 1.2V while allowing the select pins to interface with a logic level of another device up to 5.5V.

Copyright © 2024 Texas Instruments Incorporated

6.3.5 Ultra-Low Leakage Current

The TMUX1109 provides extremely low on-leakage and off-leakage currents. The TMUX1109 is capable of switching signals from high source-impedance inputs into a high input-impedance op amp with minimal offset error because of the ultralow leakage currents. Figure 6-12 shows typical leakage currents of the TMUX1109 versus temperature.

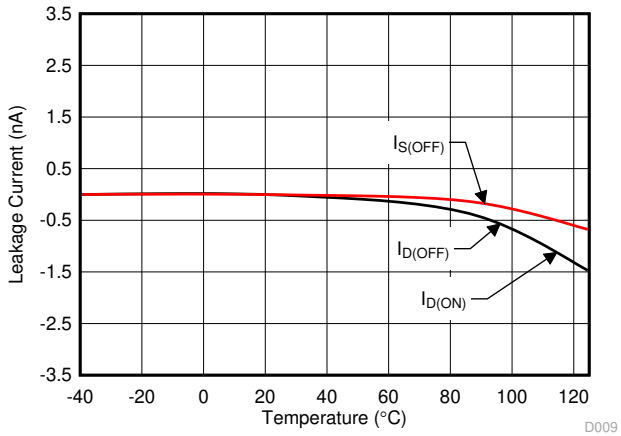

Figure 6-12. Leakage Current vs Temperature

6.3.6 Ultra-Low Charge Injection

The TMUX1109 has a transmission gate topology, as shown in Figure 6-13. Any mismatch in the stray capacitance associated with the NMOS and PMOS causes an output level change whenever the switch is opened or closed.

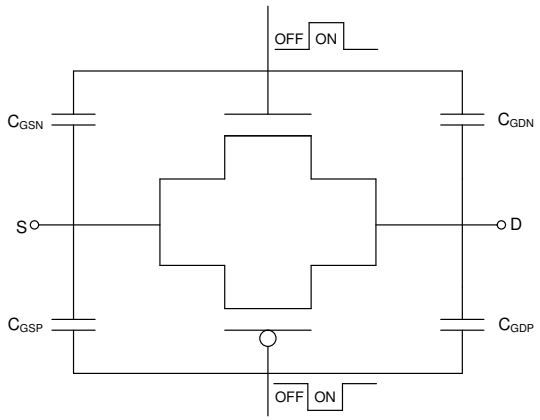

Figure 6-13. Transmission Gate Topology

The TMUX1109 has special charge-injection cancellation circuitry that reduces the source-to-drain charge injection to as low as 1pC at V_S = 1V as shown in Figure 6-14.

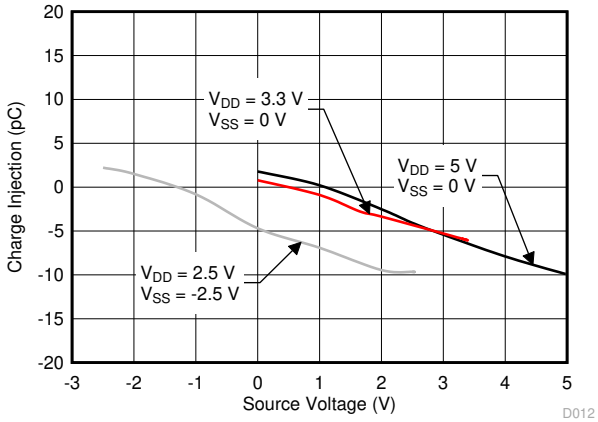

Figure 6-14. Charge Injection vs Source Voltage

6.4 Device Functional Modes

When the EN pin of the TMUX1109 is pulled high, one of the switches is closed based on the state of the address lines. When the EN pin is pulled low, all the switches are in an open state regardless of the state of the address lines.

6.4.1 Truth Tables

Table 6-1. TMUX1109 Truth Table

EN	A1	A0	Selected Input Connected To Drain (DA, DB) Pins
0	X(1)	X(1)	All channels are off
1	0	0	S1A and S1B
1	0	1	S2A and S2B
1	1	0	S3A and S3B
1	1	1	S4A and S4B

(1) X denotes *do not care*.

Copyright © 2024 Texas Instruments Incorporated

7 Application and Implementation

Note

Information in the following applications sections is not part of the TI component specification, and TI does not warrant its accuracy or completeness. TI's customers are responsible for determining suitability of components for their purposes, as well as validating and testing their design implementation to confirm system functionality.

7.1 Application Information

The TMUX11xx family offers ulta-low input/output leakage currents and low charge injection. These devices operate up to 5.5V, and offer true rail-to-rail input and output. The TMUX1109 has a low on-capacitance which allows faster settling time when multiplexing inputs in the time domain. These features make the TMUX11xx devices a family of precision, robust, high-performance analog multiplexer for low-voltage applications.

7.2 Typical Application

Figure 7-1 shows a 16-bit, simultaneous-sampling data-acquisition system. This example is typical in industrial applications that require sampling simultaneous signals such as optical modules, analog input modules, and motor drive circuits for position feedback. The circuit uses eight fully differential amplifiers (FDAs), a 16-bit, 3-MSPS successive-approximation-resistor (SAR) analog-to-digital converter (ADC), along with a two differential precision multiplexers. Refer to *True Differential, 4 x 2 MUX, Analog Front End, Simultaneous-Sampling ADC Circuit* for more information.

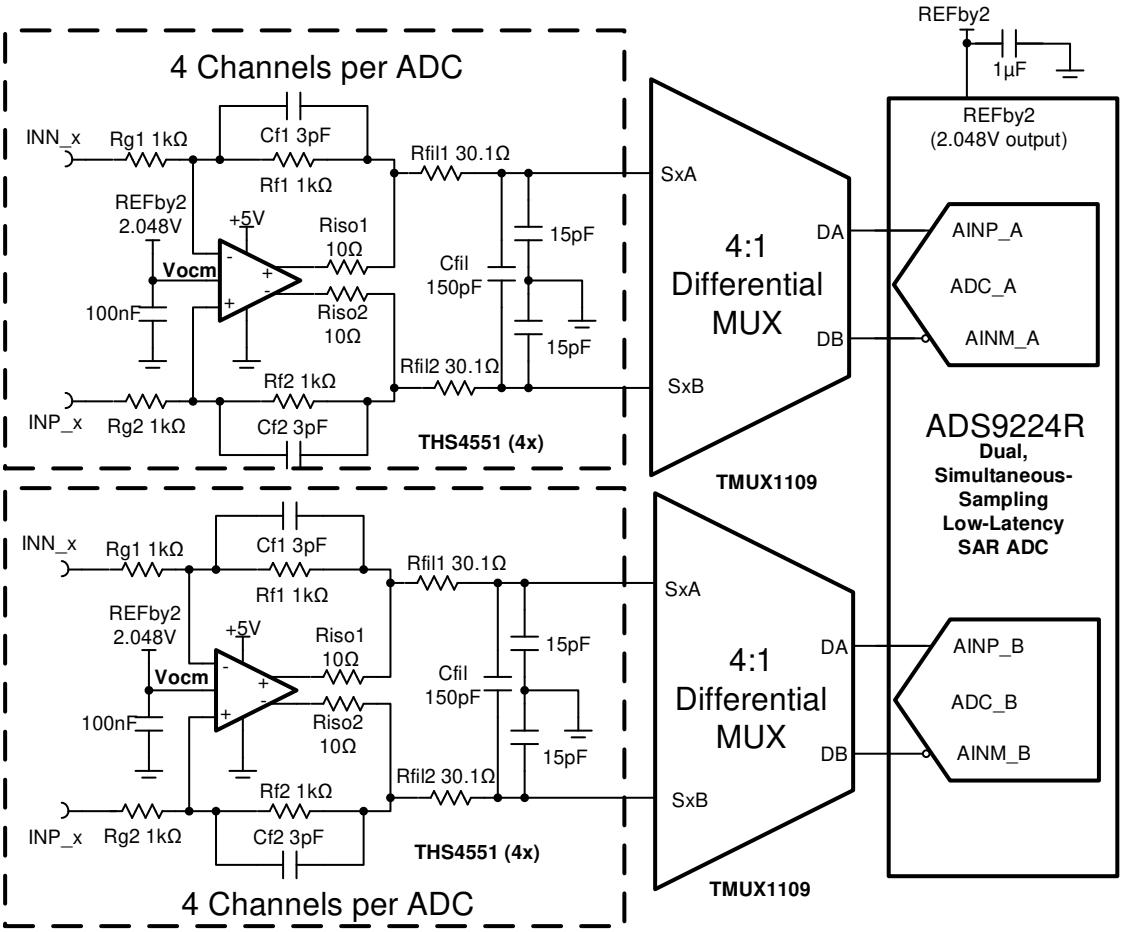

Figure 7-1. Simultaneous-Sampling ADC Circuit

7.2.1 Design Requirements

For this design example, use the parameters listed in Table 7-1.

Table 7-1. Design Parameters

PARAMETERS	VALUES
Supply (V_{DD})	5V
Vref	4.096V
Vocm	2.048V
Max Differential Voltage	3.636V
Control logic thresholds	1.8V compatible

7.2.2 Detailed Design Procedure

The TMUX1109 can operate without any external components except for the supply decoupling capacitors. If the device desired power-up state is disabled, then the enable pin should have a weak pull-down resistor and be controlled by the MCU through the GPIO. All inputs being muxed to the ADC must fall within the recommend operating conditions of the TMUX1109 including signal range and continuous current. System level design and component selection are made according to *True Differential, 4 x 2 MUX, Analog Front End, Simultaneous-Sampling ADC Circuit*.

1. The ADS9224R was selected because of the dual simultaneous sampling and high throughput (3-MSPS).
2. The TMUX1109 4:1 (2x) multiplexer was selected to support 4 differential inputs for each ADC.
3. Find ADC full-scale range, resolution and common-mode range specifications.
4. Determine the linear range of the FDA (THS4551) based on common-mode and output swing specification.
5. Select COG capacitors for all filter capacitors at the ADC input to minimize distortion.
6. Select the FDA gain resistors RF1,2 , RG1,2. Use 0.1% 20ppm/°C film resistors or better for good accuracy, low gain drift and to minimize distortion.
7. *Introduction to SAR ADC Front-End Component Selection* covers the methods for selecting the charge bucket circuit Rfil1, Rfil1 and Cfil. These component values are dependent on the amplifier bandwidth, data converter sampling rare, and data converter design. The values shown here will give good settling and AC performance for the amplifier and data converter in this example. If the design is modified, a different RC filter must be selected.
8. The THS4551 is commonly used in high-speed precision fully differential SAR applications as it has sufficient bandwidth to settle to charge kickback transients from the ADC input sampling, and multiplexer charge injection and provides the common-mode level shifting to the voltage range of the SAR ADC.
9. The TMUX1109 is used in high-speed precision fully differential SAR applications as it has sufficient bandwidth, low charge injection, and low on-resistance and capacitance. Low capacitance supports fast switching between channels and allows the system to settle within required precision in the specified timing.

Copyright © 2024 Texas Instruments Incorporated

7.2.3 Application Curve

Charge injection impacts system performance and settling characteristics of the charge bucket circuit. A multiplexer with low charge injection and a flat response across input voltage allows the system to settle to the required precision during the ADC acquisition period. Figure 7-2 shows the flat charge injection of the TMUX1109 at multiple supply voltages.

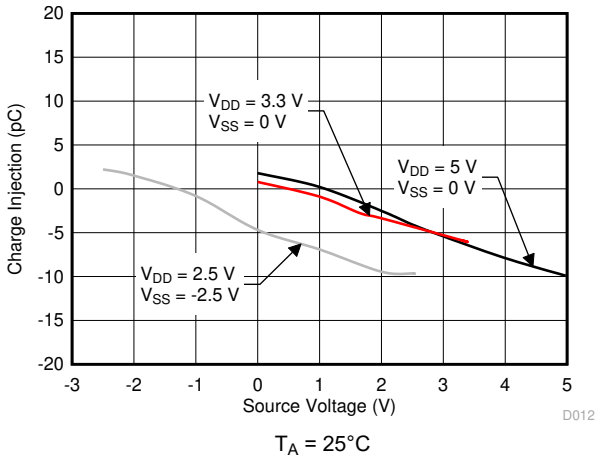

Figure 7-2. Charge Injection vs Source Voltage

7.3 Power Supply Recommendations

The TMUX1109 operates across a wide supply range of 1.08V to 5.5V, or ±2.5V. Do not exceed the absolute maximum ratings because stresses beyond the listed ratings can cause permanent damage to the devices.

Power-supply bypassing improves noise margin and prevents switching noise propagation from the V_{DD} and V_{SS} supplies to other components. Good power-supply decoupling is important to achieve optimum performance. For improved supply noise immunity, use a supply decoupling capacitor ranging from 0.1µF to 10µF from V_{DD} and V_{SS} to ground. Place the bypass capacitors as close to the power supply pins of the device as possible using low-impedance connections. TI recommends using multi-layer ceramic chip capacitors (MLCCs) that offer low equivalent series resistance (ESR) and inductance (ESL) characteristics for power-supply decoupling purposes. For very sensitive systems, or for systems in harsh noise environments, avoiding the use of vias for connecting the capacitors to the device pins may offer superior noise immunity. The use of multiple vias in parallel lowers the overall inductance and is beneficial for connections to ground planes.

7.4 Layout

7.4.1 Layout Guidelines

When a PCB trace turns a corner at a 90° angle, a reflection can occur. A reflection occurs primarily because of the change of width of the trace. At the apex of the turn, the trace width increases to 1.414 times the width. This increase upsets the transmission-line characteristics, especially the distributed capacitance and self–inductance of the trace which results in the reflection. Not all PCB traces can be straight and therefore some traces must turn corners. Figure 7-3 shows progressively better techniques of rounding corners. Only the last example (BEST) maintains constant trace width and minimizes reflections.

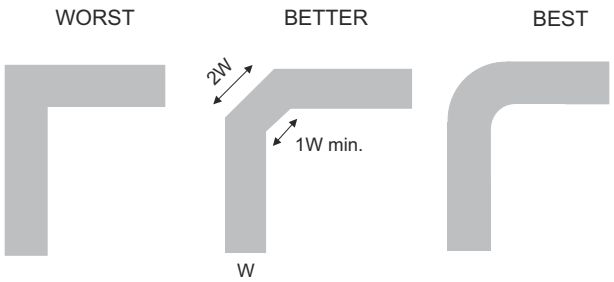

Figure 7-3. Trace Example

Route high-speed signals using a minimum of vias and corners which reduces signal reflections and impedance changes. When a via must be used, increase the clearance size around it to minimize its capacitance. Each via introduces discontinuities in the signal's transmission line and increases the chance of picking up interference from the other layers of the board. Be careful when designing test points, through-hole pins are not recommended at high frequencies.

Figure 7-4 shows an example of a PCB layout with the TMUX1109. Some key considerations are:

- Decouple the V_{DD} pin with a 0.1µF capacitor, and place the capacitor as close to the pin as possible. Ensure that the capacitor voltage rating is sufficient for the V_{DD} supply.
- Keep the input lines as short as possible.
- Use a solid ground plane to reduce electromagnetic interference (EMI) noise pickup.
- Do not run sensitive analog traces in parallel with digital traces. Avoid crossing digital and analog traces if possible, and only make perpendicular crossings when necessary.

7.4.2 Layout Example

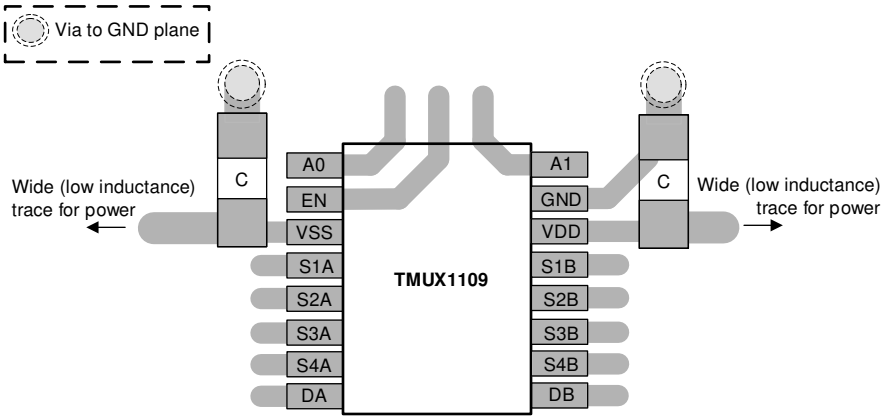

Figure 7-4. TMUX1109 Layout Example

Copyright © 2024 Texas Instruments Incorporated

8 Device and Documentation Support

8.1 Documentation Support

8.1.1 Related Documentation

For releated documentation, see the following:

- Texas Instruments, *True Differential, 4 x 2 MUX, Analog Front End, Simultaneous-Sampling ADC Circuit*.
- Texas Instruments, *Improve Stability Issues with Low CON Multiplexers*.
- Texas Instruments, *Simplifying Design with 1.8V logic Muxes and Switches*.
- Texas Instruments, *Eliminate Power Sequencing with Powered-off Protection Signal Switches*.
- Texas Instruments, *System-Level Protection for High-Voltage Analog Multiplexers*.
- Texas Instruments, *QFN/SON PCB Attachment*.
- Texas Instruments, *Quad Flatpack No-Lead Logic Packages*.

8.2 Receiving Notification of Documentation Updates

To receive notification of documentation updates, navigate to the device product folder on ti.com. Click on *Notifications* to register and receive a weekly digest of any product information that has changed. For change details, review the revision history included in any revised document.

8.3 Support Resources

TI E2E™ support forums are an engineer's go-to source for fast, verified answers and design help — straight from the experts. Search existing answers or ask your own question to get the quick design help you need.

Linked content is provided "AS IS" by the respective contributors. They do not constitute TI specifications and do not necessarily reflect TI's views; see TI's Terms of Use.

8.4 Trademarks

TI E2E™ is a trademark of Texas Instruments.
All trademarks are the property of their respective owners.

8.5 Electrostatic Discharge Caution

This integrated circuit can be damaged by ESD. Texas Instruments recommends that all integrated circuits be handled with appropriate precautions. Failure to observe proper handling and installation procedures can cause damage.

ESD damage can range from subtle performance degradation to complete device failure. Precision integrated circuits may be more susceptible to damage because very small parametric changes could cause the device not to meet its published specifications.

8.6 Glossary

TI Glossary	This glossary lists and explains terms, acronyms, and definitions.

9 Revision History

NOTE: Page numbers for previous revisions may differ from page numbers in the current version.

Changes from Revision * (December 2018) to Revision A (February 2024)	Page
• Updated Is or Id (Continuous Current) values	4
• Added Ipeak values to *Recommended Operating Conditions* table	4

10 Mechanical, Packaging, and Orderable Information

The following pages include mechanical, packaging, and orderable information. This information is the most current data available for the designated devices. This data is subject to change without notice and revision of this document. For browser-based versions of this data sheet, refer to the left-hand navigation.

PACKAGING INFORMATION

Orderable part number	Status (1)	Material type (2)	Package | Pins	Package qty | Carrier	RoHS (3)	Lead finish/ Ball material (4)	MSL rating/ Peak reflow (5)	Op temp (°C)	Part marking (6)
TMUX1109PWR	Active	Production	TSSOP (PW) | 16	2000 | LARGE T&R	Yes	NIPDAU | SN	Level-1-260C-UNLIM	-40 to 125	TM1109
TMUX1109PWR.A	Active	Production	TSSOP (PW) | 16	2000 | LARGE T&R	Yes	NIPDAU	Level-1-260C-UNLIM	-40 to 125	TM1109
TMUX1109RSVR	Active	Production	UQFN (RSV) | 16	3000 | LARGE T&R	Yes	NIPDAU	Level-1-260C-UNLIM	-40 to 125	1D1
TMUX1109RSVR.A	Active	Production	UQFN (RSV) | 16	3000 | LARGE T&R	Yes	NIPDAU	Level-1-260C-UNLIM	-40 to 125	1D1
TMUX1109RSVRG4.A	Active	Production	UQFN (RSV) | 16	3000 | LARGE T&R	Yes	NIPDAU	Level-1-260C-UNLIM	-40 to 125	1D1

(1) **Status:** For more details on status, see our product life cycle.

(2) **Material type:** When designated, preproduction parts are prototypes/experimental devices, and are not yet approved or released for full production. Testing and final process, including without limitation quality assurance, reliability performance testing, and/or process qualification, may not yet be complete, and this item is subject to further changes or possible discontinuation. If available for ordering, purchases will be subject to an additional waiver at checkout, and are intended for early internal evaluation purposes only. These items are sold without warranties of any kind.

(3) **RoHS values:** Yes, No, RoHS Exempt. See the TI RoHS Statement for additional information and value definition.

(4) **Lead finish/Ball material:** Parts may have multiple material finish options. Finish options are separated by a vertical ruled line. Lead finish/Ball material values may wrap to two lines if the finish value exceeds the maximum column width.

(5) **MSL rating/Peak reflow:** The moisture sensitivity level ratings and peak solder (reflow) temperatures. In the event that a part has multiple moisture sensitivity ratings, only the lowest level per JEDEC standards is shown. Refer to the shipping label for the actual reflow temperature that will be used to mount the part to the printed circuit board.

(6) **Part marking:** There may be an additional marking, which relates to the logo, the lot trace code information, or the environmental category of the part.

Multiple part markings will be inside parentheses. Only one part marking contained in parentheses and separated by a "~" will appear on a part. If a line is indented then it is a continuation of the previous line and the two combined represent the entire part marking for that device.

Important Information and Disclaimer: The information provided on this page represents TI's knowledge and belief as of the date that it is provided. TI bases its knowledge and belief on information provided by third parties, and makes no representation or warranty as to the accuracy of such information. Efforts are underway to better integrate information from third parties. TI has taken and continues to take reasonable steps to provide representative and accurate information but may not have conducted destructive testing or chemical analysis on incoming materials and chemicals. TI and TI suppliers consider certain information to be proprietary, and thus CAS numbers and other limited information may not be available for release.

In no event shall TI's liability arising out of such information exceed the total purchase price of the TI part(s) at issue in this document sold by TI to Customer on an annual basis.

TAPE AND REEL INFORMATION

REEL DIMENSIONS

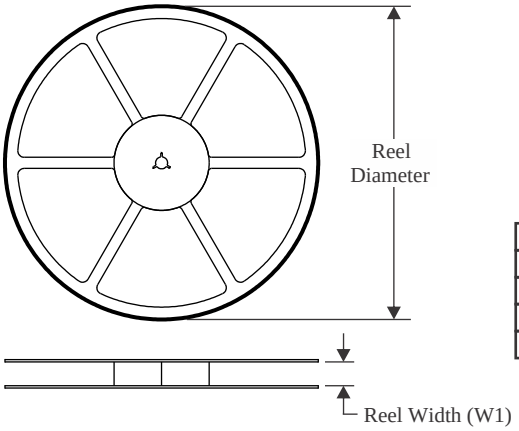

TAPE DIMENSIONS

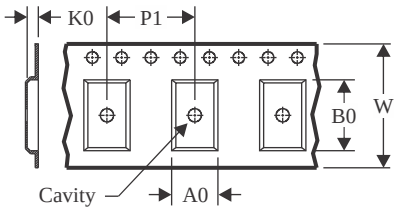

A0	Dimension designed to accommodate the component width
B0	Dimension designed to accommodate the component length
K0	Dimension designed to accommodate the component thickness
W	Overall width of the carrier tape
P1	Pitch between successive cavity centers

QUADRANT ASSIGNMENTS FOR PIN 1 ORIENTATION IN TAPE

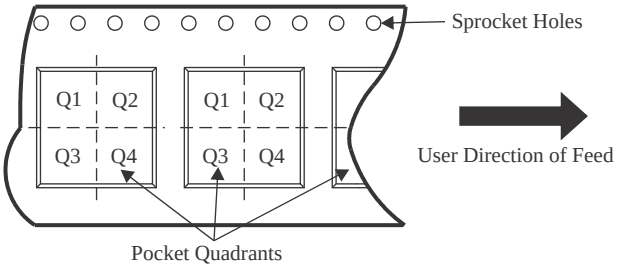

*All dimensions are nominal

Device	Package Type	Package Drawing	Pins	SPQ	Reel Diameter (mm)	Reel Width W1 (mm)	A0 (mm)	B0 (mm)	K0 (mm)	P1 (mm)	W (mm)	Pin1 Quadrant
TMUX1109PWR	TSSOP	PW	16	2000	330.0	12.4	6.9	5.6	1.6	8.0	12.0	Q1
TMUX1109RSVR	UQFN	RSV	16	3000	178.0	13.5	2.1	2.9	0.75	4.0	12.0	Q1

TAPE AND REEL BOX DIMENSIONS

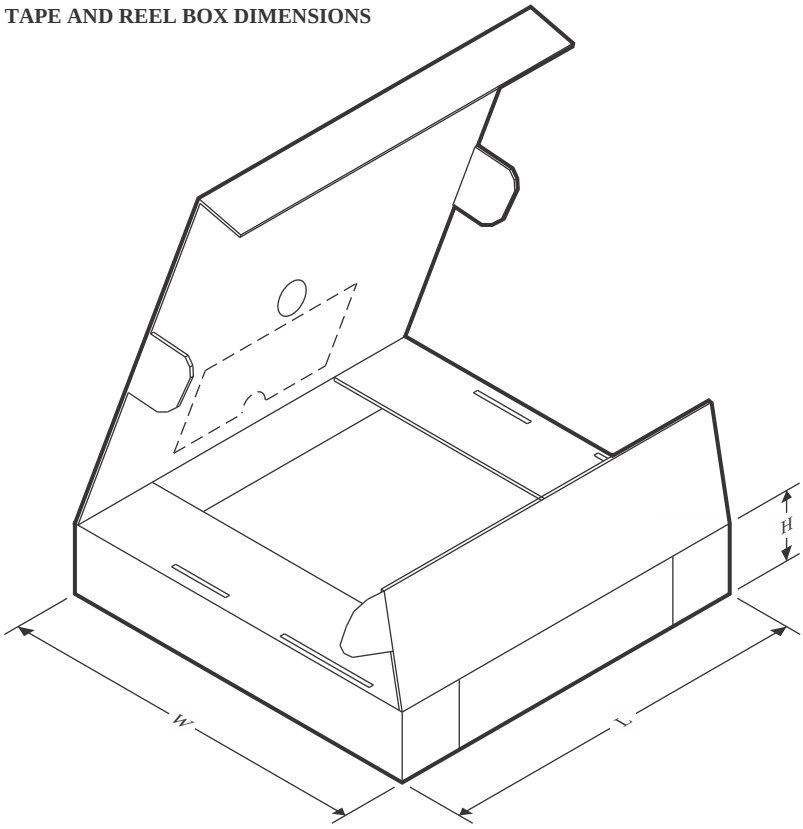

*All dimensions are nominal

Device	Package Type	Package Drawing	Pins	SPQ	Length (mm)	Width (mm)	Height (mm)
TMUX1109PWR	TSSOP	PW	16	2000	356.0	356.0	35.0
TMUX1109RSVR	UQFN	RSV	16	3000	189.0	185.0	36.0

PW0016A

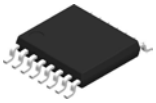

PACKAGE OUTLINE

TSSOP - 1.2 mm max height

SMALL OUTLINE PACKAGE

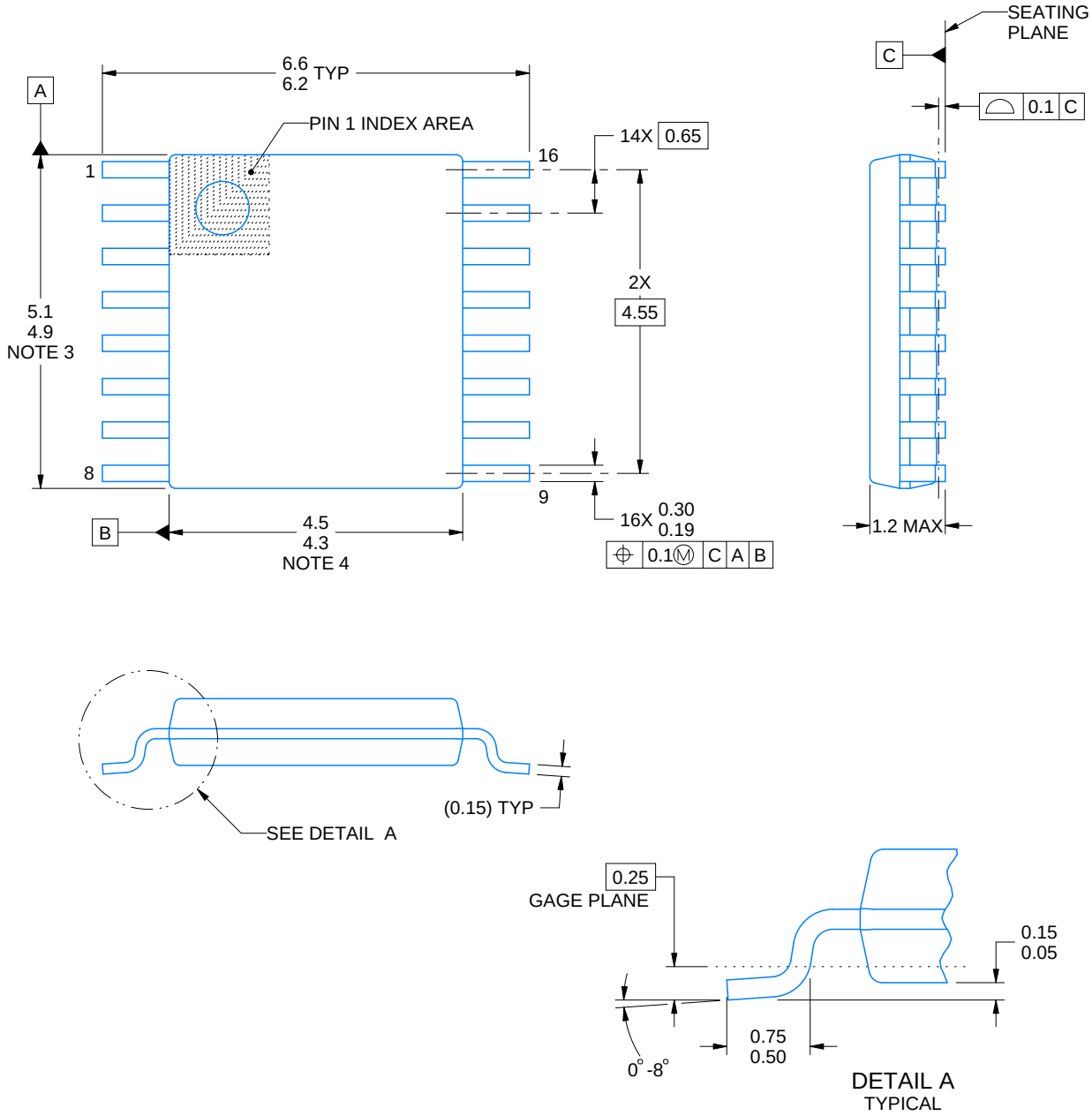

NOTES:

1. All linear dimensions are in millimeters. Any dimensions in parenthesis are for reference only. Dimensioning and tolerancing per ASME Y14.5M.
2. This drawing is subject to change without notice.
3. This dimension does not include mold flash, protrusions, or gate burrs. Mold flash, protrusions, or gate burrs shall not exceed 0.15 mm per side.
4. This dimension does not include interlead flash. Interlead flash shall not exceed 0.25 mm per side.
5. Reference JEDEC registration MO-153.

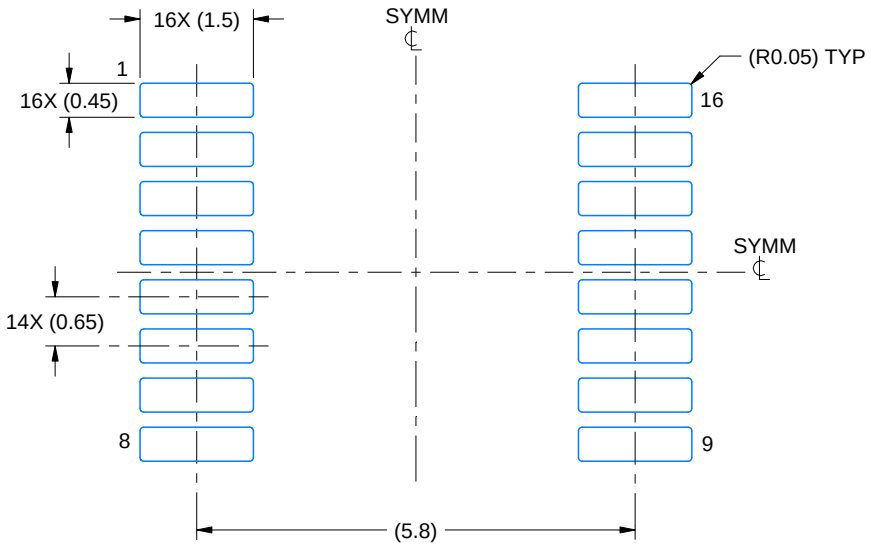

LAND PATTERN EXAMPLE
EXPOSED METAL SHOWN
SCALE: 10X

NON-SOLDER MASK DEFINED (PREFERRED)

SOLDER MASK DEFINED

SOLDER MASK DETAILS

4220204/A 02/2017

NOTES: (continued)

6. Publication IPC-7351 may have alternate designs.
7. Solder mask tolerances between and around signal pads can vary based on board fabrication site.

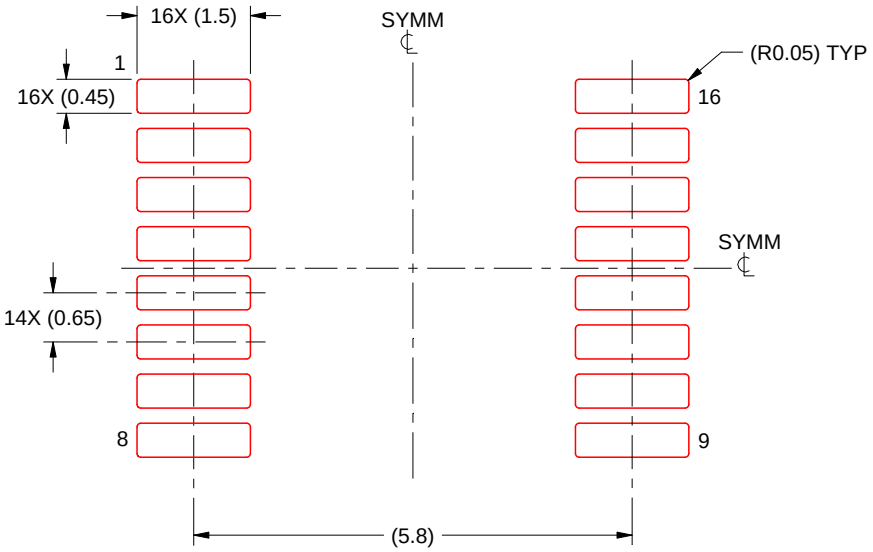

SOLDER PASTE EXAMPLE
BASED ON 0.125 mm THICK STENCIL
SCALE: 10X

4220204/A 02/2017

NOTES: (continued)

8. Laser cutting apertures with trapezoidal walls and rounded corners may offer better paste release. IPC-7525 may have alternate design recommendations.
9. Board assembly site may have different recommendations for stencil design.

GENERIC PACKAGE VIEW

RSV 16

UQFN - 0.55 mm max height

1.8 x 2.6, 0.4 mm pitch

ULTRA THIN QUAD FLATPACK - NO LEAD

This image is a representation of the package family, actual package may vary.
Refer to the product data sheet for package details.

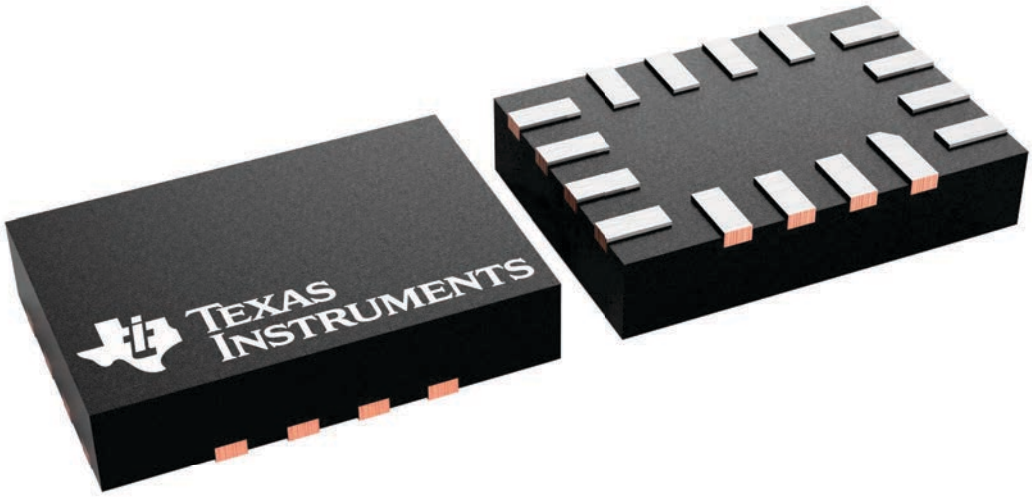

4231225/A

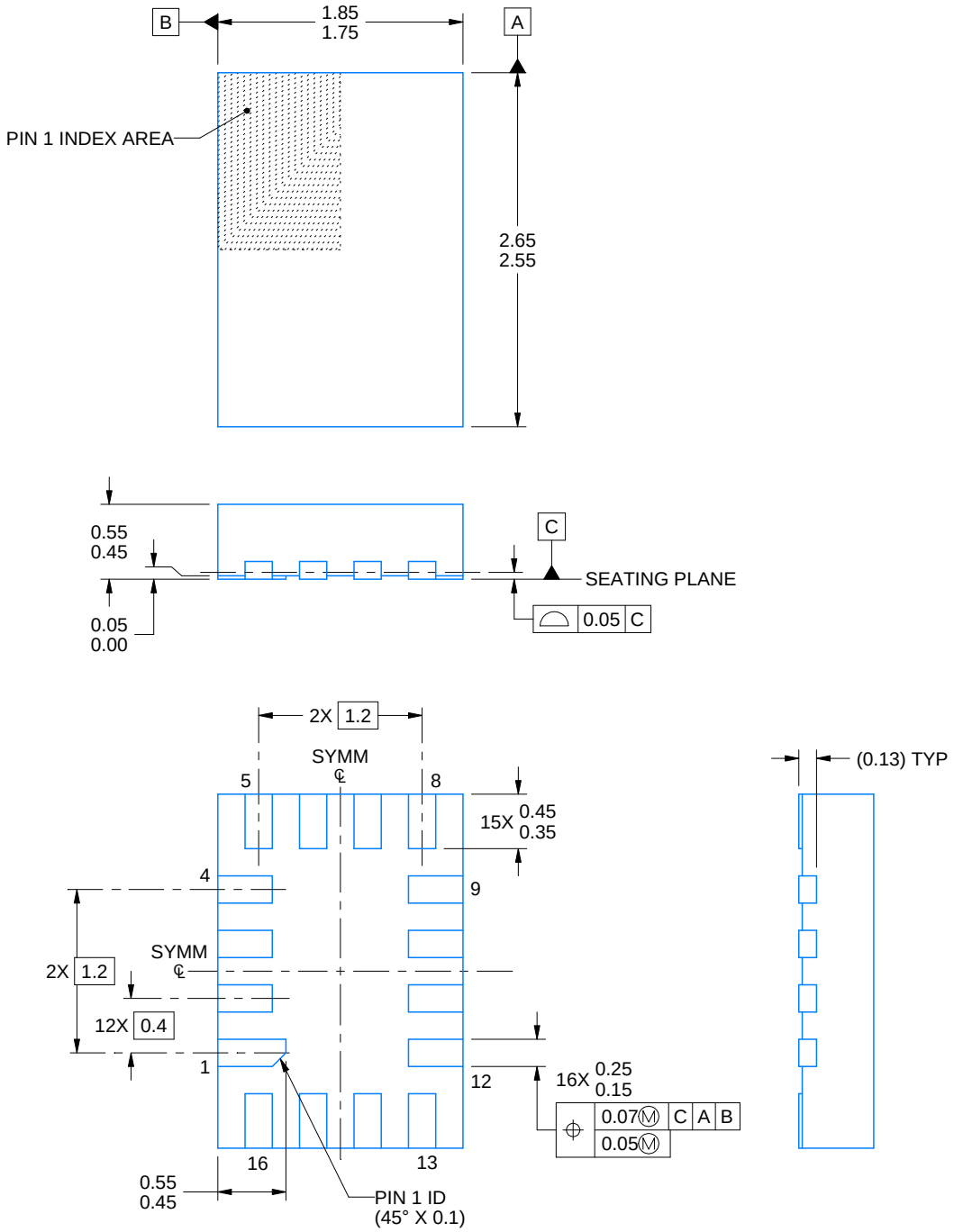

NOTES:

1. All linear dimensions are in millimeters. Any dimensions in parenthesis are for reference only. Dimensioning and tolerancing per ASME Y14.5M.
2. This drawing is subject to change without notice.

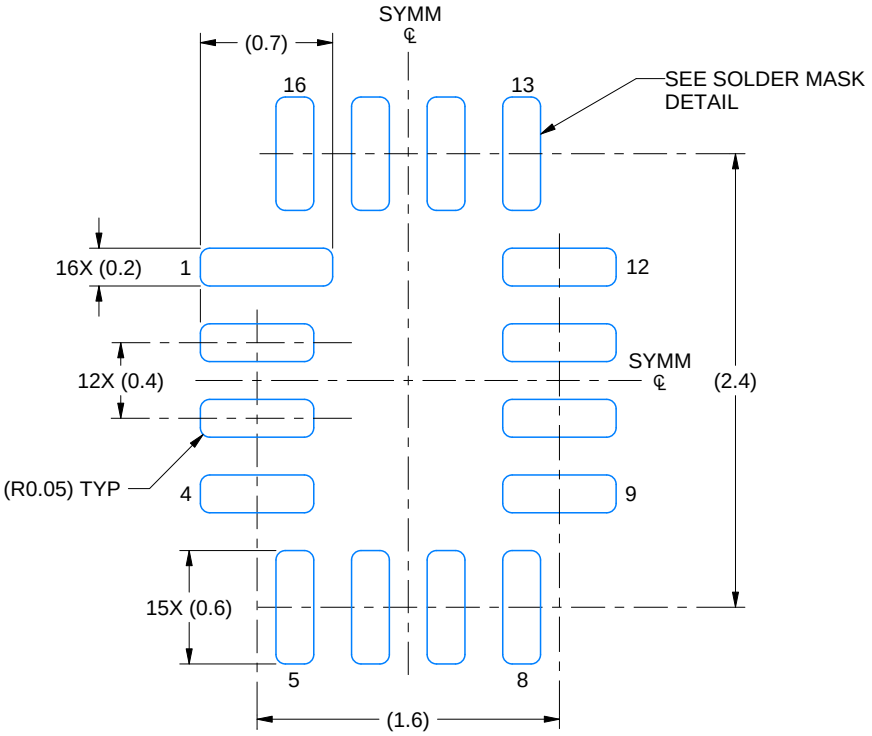

LAND PATTERN EXAMPLE
EXPOSED METAL SHOWN
SCALE: 25X

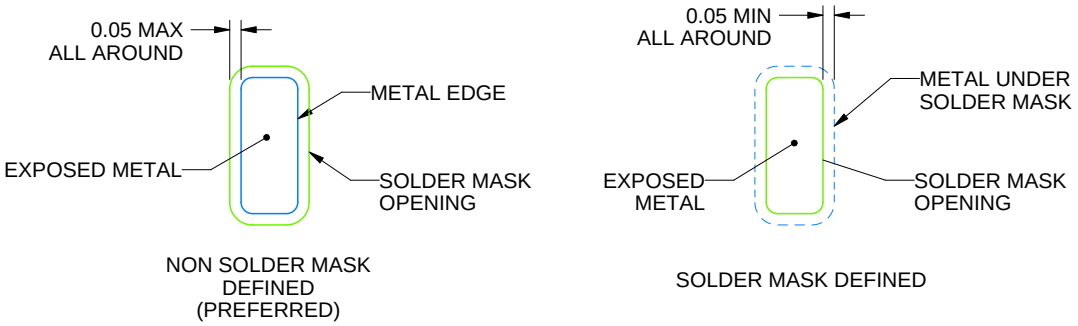

SOLDER MASK DETAILS

4220314/C 02/2020

NOTES: (continued)

3. For more information, see Texas Instruments literature number SLUA271 (www.ti.com/lit/slua271).

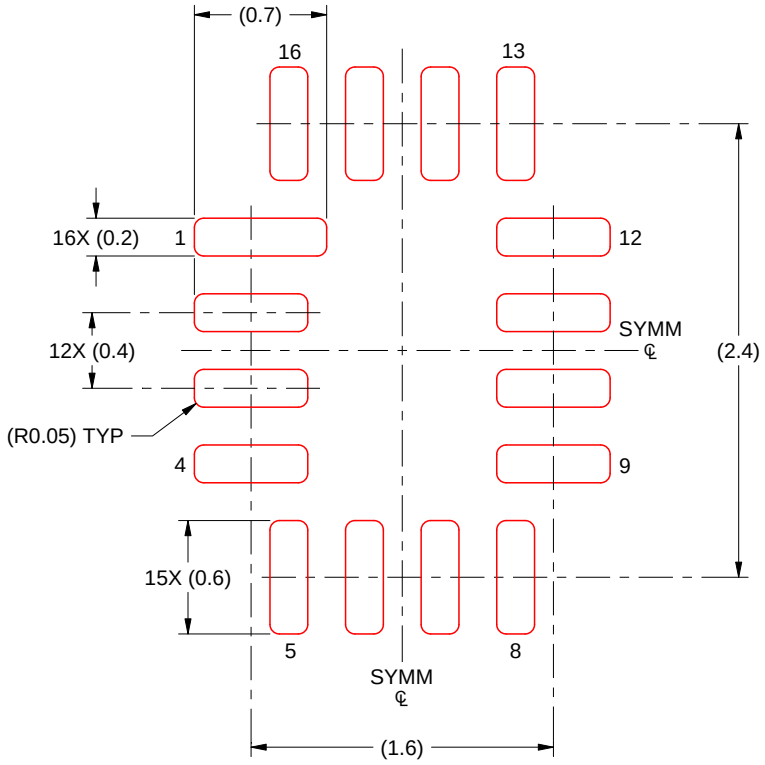

SOLDER PASTE EXAMPLE
BASED ON 0.125 MM THICK STENCIL
SCALE: 25X

4220314/C 02/2020

NOTES: (continued)

4. Laser cutting apertures with trapezoidal walls and rounded corners may offer better paste release. IPC-7525 may have alternate design recommendations.

IMPORTANT NOTICE AND DISCLAIMER

TI PROVIDES TECHNICAL AND RELIABILITY DATA (INCLUDING DATA SHEETS), DESIGN RESOURCES (INCLUDING REFERENCE DESIGNS), APPLICATION OR OTHER DESIGN ADVICE, WEB TOOLS, SAFETY INFORMATION, AND OTHER RESOURCES “AS IS” AND WITH ALL FAULTS, AND DISCLAIMS ALL WARRANTIES, EXPRESS AND IMPLIED, INCLUDING WITHOUT LIMITATION ANY IMPLIED WARRANTIES OF MERCHANTABILITY, FITNESS FOR A PARTICULAR PURPOSE OR NON-INFRINGEMENT OF THIRD PARTY INTELLECTUAL PROPERTY RIGHTS.

These resources are intended for skilled developers designing with TI products. You are solely responsible for (1) selecting the appropriate TI products for your application, (2) designing, validating and testing your application, and (3) ensuring your application meets applicable standards, and any other safety, security, regulatory or other requirements.

These resources are subject to change without notice. TI grants you permission to use these resources only for development of an application that uses the TI products described in the resource. Other reproduction and display of these resources is prohibited. No license is granted to any other TI intellectual property right or to any third party intellectual property right. TI disclaims responsibility for, and you will fully indemnify TI and its representatives against, any claims, damages, costs, losses, and liabilities arising out of your use of these resources.

TI’s products are provided subject to TI’s Terms of Sale or other applicable terms available either on ti.com or provided in conjunction with such TI products. TI’s provision of these resources does not expand or otherwise alter TI’s applicable warranties or warranty disclaimers for TI products.

TI objects to and rejects any additional or different terms you may have proposed.

Mailing Address: Texas Instruments, Post Office Box 655303, Dallas, Texas 75265
Copyright © 2025, Texas Instruments Incorporated