LOW-POWER DUAL SCHMITT-TRIGGER BUFFER

Check for Samples: SN74AUP2G17

FEATURES

- **Available in the Texas Instruments NanoStar™ Package**
- **Low Static-Power Consumption (I_{CC} = 0.9 μA Maximum)**
- **Low Dynamic-Power Consumption (C_{pd} = 4.3 pF Typical at 3.3 V)**
- **Low Input Capacitance (C_i = 1.5 pF Typical)**
- **Low Noise – Overshoot and Undershoot <10% of V_{CC}**
- **I_{off} Supports Partial-Power-Down Mode Operation**
- **Wide Operating V_{CC} Range of 0.8 V to 3.6 V**
- **Optimized for 3.3-V Operation**
- **3.6-V I/O Tolerant to Support Mixed-Mode Signal Operation**
- **t_{pd} = 5.1 ns Maximum at 3.3 V**
- **Suitable for Point-to-Point Applications**
- **Latch-Up Performance Exceeds 100 mA Per JESD 78, Class II**
- **ESD Performance Tested Per JESD 22**
  - **2000-V Human-Body Model (A114-B, Class II)**
  - **1000-V Charged-Device Model (C101)**

DCK PACKAGE (TOP VIEW)

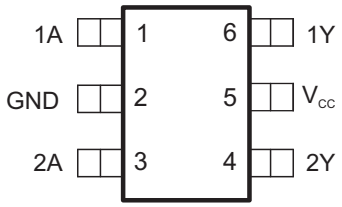

DRY PACKAGE (TOP VIEW)

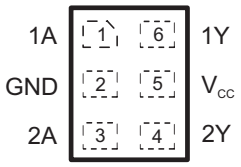

DSF PACKAGE (TOP VIEW)

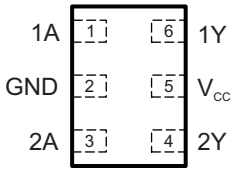

YFP PACKAGE (TOP VIEW)

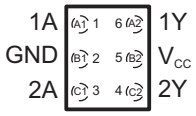

See mechanical drawings for dimensions.

DESCRIPTION/ORDERING INFORMATION

The AUP family is TI's premier solution to the industry's low-power needs in battery-powered portable applications. This family ensures a very low static- and dynamic-power consumption across the entire V_{CC} range of 0.8 V to 3.6 V, resulting in increased battery life (see Figure 1). This product also maintains excellent signal integrity (see the very low undershoot and overshoot characteristics shown in Figure 2).

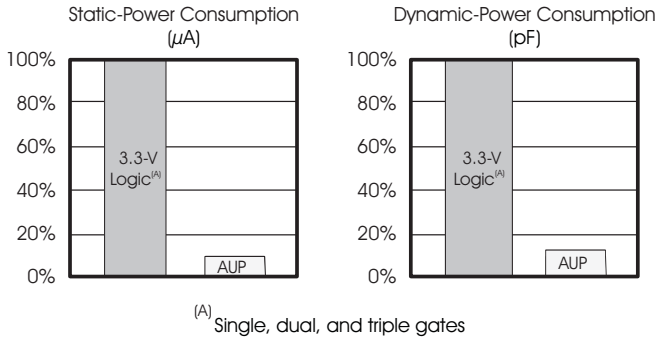

Figure 1. AUP – The Lowest-Power Family

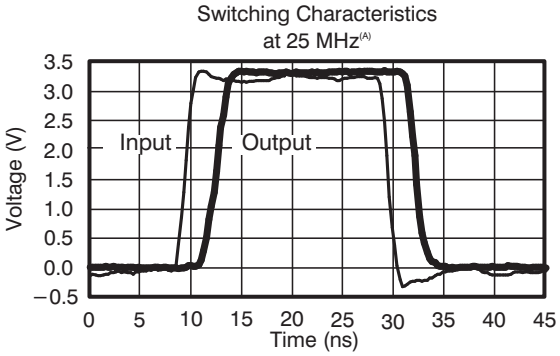

(A) SN74AUP2Gxx data at C_L = 15 pF.

Figure 2. Excellent Signal Integrity

Please be aware that an important notice concerning availability, standard warranty, and use in critical applications of Texas Instruments semiconductor products and disclaimers thereto appears at the end of this data sheet.

UNLESS OTHERWISE NOTED this document contains PRODUCTION DATA information current as of publication date. Products conform to specifications per the terms of Texas Instruments standard warranty. Production processing does not necessarily include testing of all parameters.

Copyright © 2009–2010, Texas Instruments Incorporated

The SN74AUP2G17 contains two buffers and performs the Boolean function Y = A. The device functions as two independent buffers, but because of Schmitt action, it may have different input threshold levels for positive-going (V_{T+}) and negative-going (V_{T-}) signals.

NanoStar™ package technology is a major breakthrough in IC packaging concepts, using the die as the package.

This device is fully specified for partial-power-down applications using I_{off}. The I_{off} circuitry disables the outputs, preventing damaging current backflow through the device when it is powered down.

ORDERING INFORMATION(1) (2)

T_A	PACKAGE		ORDERABLE PART NUMBER	TOP-SIDE MARKING(3)
–40°C to 85°C	NanoStar™ – WCSP (DSBGA) 0.23-mm Large Bump – YFP (Pb-free)	Reel of 3000	SN74AUP2G17YFPR	_ _ _ H 7 _
	QFN – DSF	Reel of 5000	SN74AUP2G17DSFR	HL
	uQFN – DRY	Reel of 5000	SN74AUP2G17DRYR	HL
	SOT (SC-70) – DCK	Reel of 3000	SN74AUP2G17DCKR	HL_

(1) Package drawings, thermal data, and symbolization are available at www.ti.com/packaging.
(2) For the most current package and ordering information, see the Package Option Addendum at the end of this document, or see the TI website at www.ti.com.
(3) DCK: The actual top-side marking has one additional character that designates the wafer fab/assembly site.
YFP: The actual top-side marking has three preceding characters to denote year, month, and sequence code, and one following character to designate the wafer fab/assembly site. Pin 1 identifier indicates solder-bump composition (1 = SnPb, • = Pb-free).

FUNCTION TABLE (Each Inverter)

INPUT A	OUTPUT Y
H	H
L	L

LOGIC DIAGRAM (POSITIVE LOGIC)

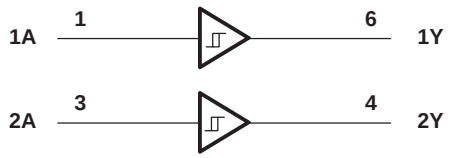

Copyright © 2009–2010, Texas Instruments Incorporated

ABSOLUTE MAXIMUM RATINGS[1]

over operating free-air temperature range (unless otherwise noted)

			MIN	MAX	UNIT
V_{CC}	Supply voltage range		–0.5	4.6	V
V_I	Input voltage range[2]		–0.5	4.6	V
V_O	Voltage range applied to any output in the high-impedance or power-off state[2]		–0.5	4.6	V
V_O	Output voltage range in the high or low state[2]		–0.5	V_{CC} + 0.5	V
I_{IK}	Input clamp current	$V_I < 0$		–50	mA
I_{OK}	Output clamp current	$V_O < 0$		–50	mA
I_O	Continuous output current			±20	mA
	Continuous current through V_{CC} or GND			±50	mA
θ_{JA}	Package thermal impedance[3]	DCK package		252	°C/W
		DSF package		300	
		DRY package		234	
		YFP package		132	
T_{stg}	Storage temperature range		–65	150	°C

(1) Stresses beyond those listed under "absolute maximum ratings" may cause permanent damage to the device. These are stress ratings only, and functional operation of the device at these or any other conditions beyond those indicated under "recommended operating conditions" is not implied. Exposure to absolute-maximum-rated conditions for extended periods may affect device reliability.
(2) The input negative-voltage and output voltage ratings may be exceeded if the input and output current ratings are observed.
(3) The package thermal impedance is calculated in accordance with JESD 51-7.

Copyright © 2009–2010, Texas Instruments Incorporated

RECOMMENDED OPERATING CONDITIONS[1]

			MIN	MAX	UNIT
V_{CC}	Supply voltage		0.8	3.6	V
V_I	Input voltage		0	3.6	V
V_O	Output voltage		0	V_{CC}	V
I_{OH}	High-level output current	V_{CC} = 0.8 V		–20	μA
		V_{CC} = 1.1 V		–1.1	mA
		V_{CC} = 1.4 V		–1.7	
		V_{CC} = 1.65		–1.9	
		V_{CC} = 2.3 V		–3.1	
		V_{CC} = 3 V		–4	
I_{OL}	Low-level output current	V_{CC} = 0.8 V		20	μA
		V_{CC} = 1.1 V		1.1	mA
		V_{CC} = 1.4 V		1.7	
		V_{CC} = 1.65 V		1.9	
		V_{CC} = 2.3 V		3.1	
		V_{CC} = 3 V		4	
T_A	Operating free-air temperature		–40	85	°C

(1) All unused inputs of the device must be held at V_{CC} or GND to ensure proper device operation. Refer to the TI application report, Implications of Slow or Floating CMOS Inputs, literature number SCBA004.

Copyright © 2009–2010, Texas Instruments Incorporated

ELECTRICAL CHARACTERISTICS

over recommended operating free-air temperature range (unless otherwise noted)

PARAMETER	TEST CONDITIONS	V_{CC}	T_A = 25°C			T_A = –40°C to 85°C		UNIT
			MIN	TYP	MAX	MIN	MAX	
V_{T+} Positive-going input threshold voltage		0.8 V	0.3		0.6	0.3	0.6	V
		1.1 V	0.53		0.9	0.53	0.9	
		1.4 V	0.74		1.11	0.74	1.11	
		1.65 V	0.91		1.29	0.91	1.29	
		2.3 V	1.37		1.77	1.37	1.77	
		3 V	1.88		2.29	1.88	2.29	
V_{T-} Negative-going input threshold voltage		0.8 V	0.1		0.6	0.1	0.6	V
		1.1 V	0.26		0.65	0.26	0.65	
		1.4 V	0.39		0.75	0.39	0.75	
		1.65 V	0.47		0.84	0.47	0.84	
		2.3 V	0.69		1.04	0.69	1.04	
		3 V	0.88		1.24	0.88	1.24	
ΔV_T Hysteresis ($V_{T+} - V_{T-}$)		0.8 V	0.07		0.5	0.07	0.5	V
		1.1 V	0.08		0.46	0.08	0.46	
		1.4 V	0.18		0.56	0.18	0.56	
		1.65 V	0.27		0.66	0.27	0.66	
		2.3 V	0.53		0.92	0.53	0.92	
		3 V	0.79		1.31	0.79	1.31	
V_{OH}	I_{OH} = –20 µA	0.8 V to 3.6 V	V_{CC} – 0.1			V_{CC} – 0.1		V
	I_{OH} = –1.1 mA	1.1 V	0.75 × V_{CC}			0.7 × V_{CC}		
	I_{OH} = –1.7 mA	1.4 V	1.11			1.03		
	I_{OH} = –1.9 mA	1.65 V	1.32			1.3		
	I_{OH} = –2.3 mA	2.3 V	2.05			1.97		
	I_{OH} = –3.1 mA		1.9			1.85		
	I_{OH} = –2.7 mA	3 V	2.72			2.67		
	I_{OH} = –4 mA		2.6			2.55		
V_{OL}	I_{OL} = 20 µA	0.8 V to 3.6 V			0.1		0.1	V
	I_{OL} = 1.1 mA	1.1 V			0.3 × V_{CC}		0.3 × V_{CC}	
	I_{OL} = 1.7 mA	1.4 V			0.31		0.37	
	I_{OL} = 1.9 mA	1.65 V			0.31		0.35	
	I_{OL} = 2.3 mA	2.3 V			0.31		0.33	
	I_{OL} = 3.1 mA				0.44		0.45	
	I_{OL} = 2.7 mA	3 V			0.31		0.33	
	I_{OL} = 4 mA				0.44		0.45	
I_I A or B input	V_I = GND to 3.6 V	0 V to 3.6 V			0.1		0.5	µA
I_{off}	V_I or V_O = 0 V to 3.6 V	0 V			0.2		0.6	µA
ΔI_{off}	V_I or V_O = 0 V to 3.6 V	0 V to 0.2 V			0.2		0.6	µA
I_{CC}	V_I = GND or (V_{CC} to 3.6 V), I_O = 0	0.8 V to 3.6 V			0.5		0.9	µA
ΔI_{CC}	V_I = V_{CC} – 0.6 V(1), I_O = 0	3.3 V			40		50	µA
C_i	V_I = V_{CC} or GND	0 V		1.5				pF
		3.6 V		1.5				
C_o	V_O = GND	0 V		3				pF

(1) One input at V_{CC} – 0.6 V, other input at V_{CC} or GND.

Copyright © 2009–2010, Texas Instruments Incorporated

SWITCHING CHARACTERISTICS

over recommended operating free-air temperature range, C_L = 5 pF (unless otherwise noted) (see Figure 3 and Figure 4)

PARAMETER	FROM (INPUT)	TO (OUTPUT)	V_{CC}	T_A = 25°C			T_A = –40°C to 85°C		UNIT
				MIN	TYP	MAX	M IN	MAX	
t_{pd}	A	Y	0.8 V		22.7				ns
			1.2 V ± 0.1 V	6.3	8	12.8	3.9	14.6	
			1.5 V ± 0.1 V	4.6	5.8	8.4	2.8	10	
			1.8 V ± 0.15 V	3.9	4.8	7.2	2.4	8.1	
			2.5 V ± 0.2 V	3.1	3.6	5.1	2	6.1	
			3.3 V ± 0.3 V	2.7	3	4.4	1.9	5.1	

SWITCHING CHARACTERISTICS

over recommended operating free-air temperature range, C_L = 10 pF (unless otherwise noted) (see Figure 3 and Figure 4)

PARAMETER	FROM (INPUT)	TO (OUTPUT)	V_{CC}	T_A = 25°C			T_A = –40°C to 85°C		UNIT
				MIN	TYP	MAX	MIN	MAX	
t_{pd}	A	Y	0.8 V		25.1				ns
			1.2 V ± 0.1 V	7.1	9.1	13.8	4.7	15.6	
			1.5 V ± 0.1 V	5.2	6.5	9.4	3.4	11	
			1.8 V ± 0.15 V	4.5	5.4	8	2.9	9	
			2.5 V ± 0.2 V	3.5	4.2	5.7	2.4	6.8	
			3.3 V ± 0.3 V	3.1	3.5	4.9	2.2	5.7	

SWITCHING CHARACTERISTICS

over recommended operating free-air temperature range, C_L = 15 pF (unless otherwise noted) (see Figure 3 and Figure 4)

PARAMETER	FROM (INPUT)	TO (OUTPUT)	V_{CC}	T_A = 25°C			T_A = –40°C to 85°C		UNIT
				MIN	TYP	MAX	MIN	MAX	
t_{pd}	A	Y	0.8 V		27.6				ns
			1.2 V ± 0.1 V	7.8	10.1	14.8	5.3	16.7	
			1.5 V ± 0.1 V	5.8	7.4	10.3	3.9	12	
			1.8 V ± 0.15 V	5	6.1	8.8	3.4	10	
			2.5 V ± 0.2 V	4	4.7	6.4	2.8	7.5	
			3.3 V ± 0.3 V	3.5	4.1	5.4	2.6	6.2	

SWITCHING CHARACTERISTICS

over recommended operating free-air temperature range, C_L = 30 pF (unless otherwise noted) (see Figure 3 and Figure 4)

PARAMETER	FROM (INPUT)	TO (OUTPUT)	V_{CC}	T_A = 25°C			T_A = –40°C to 85°C		UNIT
				MIN	TYP	MAX	MIN	MAX	
t_{pd}	A	Y	0.8 V		35.1				ns
			1.2 V ± 0.1 V	10	13.1	18.1	7.5	19.8	
			1.5 V ± 0.1 V	7.4	9.6	12.9	5.6	14.9	
			1.8 V ± 0.15 V	6.4	7.9	11	4.8	12.4	
			2.5 V ± 0.2 V	5.2	6.1	7.9	4	9.3	
			3.3 V ± 0.3 V	4.6	5.3	6.7	3.6	7.7	

Copyright © 2009–2010, Texas Instruments Incorporated

OPERATING CHARACTERISTICS

T_A = 25°C

PARAMETER		TEST CONDITIONS	V_{CC}	TYP	UNIT
C_{pd}	Power dissipation capacitance	f = 10 MHz	0.8 V	4	pF
			1.2 V ± 0.1 V	4	
			1.5 V ± 0.1 V	4	
			1.8 V ± 0.15 V	4	
			2.5 V ± 0.2 V	4.1	
			3.3 V ± 0.3 V	4.3	

Copyright © 2009–2010, Texas Instruments Incorporated

PARAMETER MEASUREMENT INFORMATION
(Propagation Delays, Setup and Hold Times, and Pulse Width)

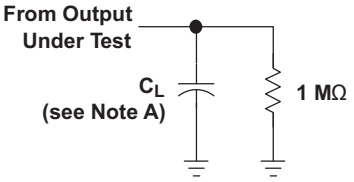

LOAD CIRCUIT

	V_{CC} = 0.8 V	V_{CC} = 1.2 V ± 0.1 V	V_{CC} = 1.5 V ± 0.1 V	V_{CC} = 1.8 V ± 0.15 V	V_{CC} = 2.5 V ± 0.2 V	V_{CC} = 3.3 V ± 0.3 V
C_L	5, 10, 15, 30 pF	5, 10, 15, 30 pF	5, 10, 15, 30 pF	5, 10, 15, 30 pF	5, 10, 15, 30 pF	5, 10, 15, 30 pF
V_M	$V_{CC}/2$	$V_{CC}/2$	$V_{CC}/2$	$V_{CC}/2$	$V_{CC}/2$	$V_{CC}/2$
V_I	V_{CC}	V_{CC}	V_{CC}	V_{CC}	V_{CC}	V_{CC}

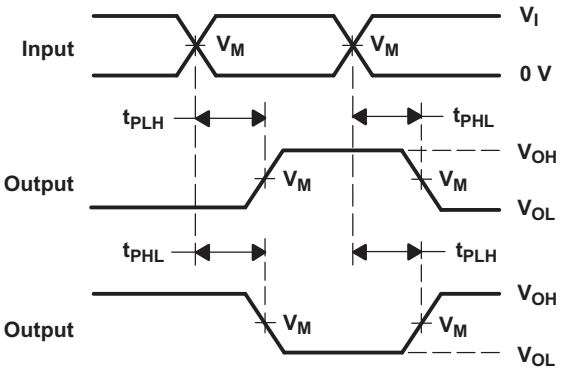

VOLTAGE WAVEFORMS
PROPAGATION DELAY TIMES
INVERTING AND NONINVERTING OUTPUTS

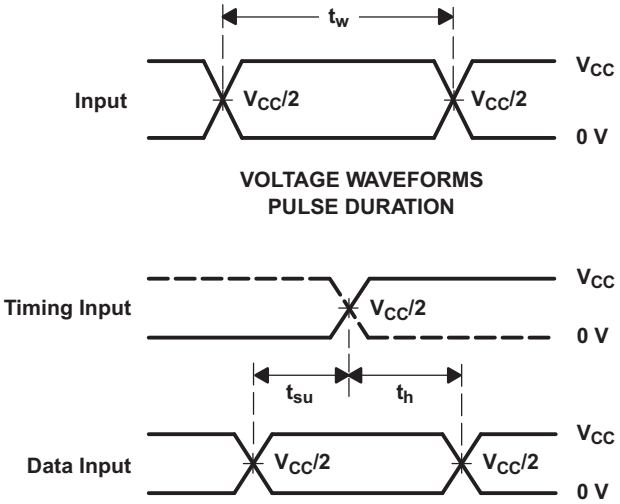

VOLTAGE WAVEFORMS
PULSE DURATION

VOLTAGE WAVEFORMS
SETUP AND HOLD TIMES

A. C_L includes probe and jig capacitance.

B. Waveform 1 is for an output with internal conditions such that the output is low, except when disabled by the output control. Waveform 2 is for an output with internal conditions such that the output is high, except when disabled by the output control.

C. All input pulses are supplied by generators having the following characteristics: PRR ≤ 10 MHz, Z_O = 50 Ω, for propagation delays t_r/t_f = 3 ns, for setup and hold times and pulse width t_r/t_f = 1.2 ns.

D. The outputs are measured one at a time, with one transition per measurement.

E. t_{PLH} and t_{PHL} are the same as t_{pd}.

F. All parameters and waveforms are not applicable to all devices.

Figure 3. Load Circuit and Voltage Waveforms

Copyright © 2009–2010, Texas Instruments Incorporated

PARAMETER MEASUREMENT INFORMATION
(Enable and Disable Times)

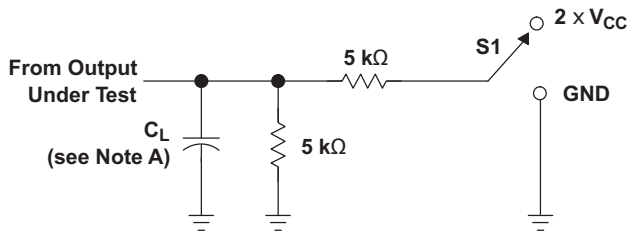

TEST	S1
t_{PLZ}/t_{PZL} t_{PHZ}/t_{PZH}	2 × V_{CC} GND

LOAD CIRCUIT

	V_{CC} = 0.8 V	V_{CC} = 1.2 V ± 0.1 V	V_{CC} = 1.5 V ± 0.1 V	V_{CC} = 1.8 V ± 0.15 V	V_{CC} = 2.5 V ± 0.2 V	V_{CC} = 3.3 V ± 0.3 V
C_L	5, 10, 15, 30 pF	5, 10, 15, 30 pF	5, 10, 15, 30 pF	5, 10, 15, 30 pF	5, 10, 15, 30 pF	5, 10, 15, 30 pF
V_M	$V_{CC}/2$	$V_{CC}/2$	$V_{CC}/2$	$V_{CC}/2$	$V_{CC}/2$	$V_{CC}/2$
V_I	V_{CC}	V_{CC}	V_{CC}	V_{CC}	V_{CC}	V_{CC}
V_Δ	0.1 V	0.1 V	0.1 V	0.15 V	0.15 V	0.3 V

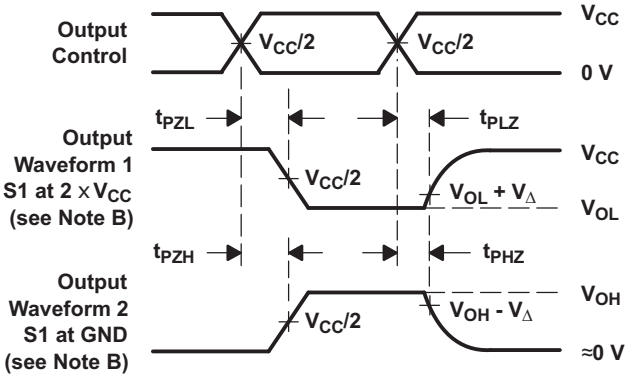

VOLTAGE WAVEFORMS
ENABLE AND DISABLE TIMES
LOW- AND HIGH-LEVEL ENABLING

A. C_L includes probe and jig capacitance.

B. Waveform 1 is for an output with internal conditions such that the output is low, except when disabled by the output control. Waveform 2 is for an output with internal conditions such that the output is high, except when disabled by the output control.

C. All input pulses are supplied by generators having the following characteristics: PRR ≤ 10 MHz, Z_O = 50 Ω, t_r/t_f = 3 ns.

D. The outputs are measured one at a time, with one transition per measurement.

E. t_{PLZ} and t_{PHZ} are the same as t_{dis}.

F. t_{PLH} and t_{PHL} are the same as t_{pd}.

G. All parameters and waveforms are not applicable to all devices.

Figure 4. Load Circuit and Voltage Waveforms

Copyright © 2009–2010, Texas Instruments Incorporated

PACKAGING INFORMATION

Orderable part number	Status (1)	Material type (2)	Package | Pins	Package qty | Carrier	RoHS (3)	Lead finish/ Ball material (4)	MSL rating/ Peak reflow (5)	Op temp (°C)	Part marking (6)
SN74AUP2G17DCKR	Active	Production	SC70 (DCK) | 6	3000 | LARGE T&R	Yes	NIPDAU | SN | NIPDAU	Level-1-260C-UNLIM	-40 to 85	(HL5, HLF)
SN74AUP2G17DCKR.B	Active	Production	SC70 (DCK) | 6	3000 | LARGE T&R	Yes	SN	Level-1-260C-UNLIM	-40 to 85	(HL5, HLF)
SN74AUP2G17DRYR	Active	Production	SON (DRY) | 6	5000 | LARGE T&R	Yes	NIPDAU | NIPDAUAG	Level-1-260C-UNLIM	-40 to 85	HL
SN74AUP2G17DRYR.B	Active	Production	SON (DRY) | 6	5000 | LARGE T&R	Yes	NIPDAUAG	Level-1-260C-UNLIM	-40 to 85	HL
SN74AUP2G17DRYRG4	Active	Production	SON (DRY) | 6	5000 | LARGE T&R	Yes	NIPDAU	Level-1-260C-UNLIM	-40 to 85	HL
SN74AUP2G17DRYRG4.B	Active	Production	SON (DRY) | 6	5000 | LARGE T&R	Yes	NIPDAU	Level-1-260C-UNLIM	-40 to 85	HL
SN74AUP2G17DSFR	Active	Production	SON (DSF) | 6	5000 | LARGE T&R	Yes	NIPDAU | NIPDAUAG | NIPDAU	Level-1-260C-UNLIM	-40 to 85	HL
SN74AUP2G17DSFR.B	Active	Production	SON (DSF) | 6	5000 | LARGE T&R	Yes	NIPDAU	Level-1-260C-UNLIM	-40 to 85	HL
SN74AUP2G17YFPR	Active	Production	DSBGA (YFP) | 6	3000 | LARGE T&R	Yes	SNAGCU	Level-1-260C-UNLIM	-40 to 85	H7N
SN74AUP2G17YFPR.B	Active	Production	DSBGA (YFP) | 6	3000 | LARGE T&R	Yes	SNAGCU	Level-1-260C-UNLIM	-40 to 85	H7N

(1) **Status:** For more details on status, see our product life cycle.

(2) **Material type:** When designated, preproduction parts are prototypes/experimental devices, and are not yet approved or released for full production. Testing and final process, including without limitation quality assurance, reliability performance testing, and/or process qualification, may not yet be complete, and this item is subject to further changes or possible discontinuation. If available for ordering, purchases will be subject to an additional waiver at checkout, and are intended for early internal evaluation purposes only. These items are sold without warranties of any kind.

(3) **RoHS values:** Yes, No, RoHS Exempt. See the TI RoHS Statement for additional information and value definition.

(4) **Lead finish/Ball material:** Parts may have multiple material finish options. Finish options are separated by a vertical ruled line. Lead finish/Ball material values may wrap to two lines if the finish value exceeds the maximum column width.

(5) **MSL rating/Peak reflow:** The moisture sensitivity level ratings and peak solder (reflow) temperatures. In the event that a part has multiple moisture sensitivity ratings, only the lowest level per JEDEC standards is shown. Refer to the shipping label for the actual reflow temperature that will be used to mount the part to the printed circuit board.

(6) **Part marking:** There may be an additional marking, which relates to the logo, the lot trace code information, or the environmental category of the part.

Multiple part markings will be inside parentheses. Only one part marking contained in parentheses and separated by a "~" will appear on a part. If a line is indented then it is a continuation of the previous line and the two combined represent the entire part marking for that device.

Important Information and Disclaimer: The information provided on this page represents TI's knowledge and belief as of the date that it is provided. TI bases its knowledge and belief on information provided by third parties, and makes no representation or warranty as to the accuracy of such information. Efforts are underway to better integrate information from third parties. TI has taken and continues to take reasonable steps to provide representative and accurate information but may not have conducted destructive testing or chemical analysis on incoming materials and chemicals. TI and TI suppliers consider certain information to be proprietary, and thus CAS numbers and other limited information may not be available for release.

In no event shall TI's liability arising out of such information exceed the total purchase price of the TI part(s) at issue in this document sold by TI to Customer on an annual basis.

TAPE AND REEL INFORMATION

REEL DIMENSIONS

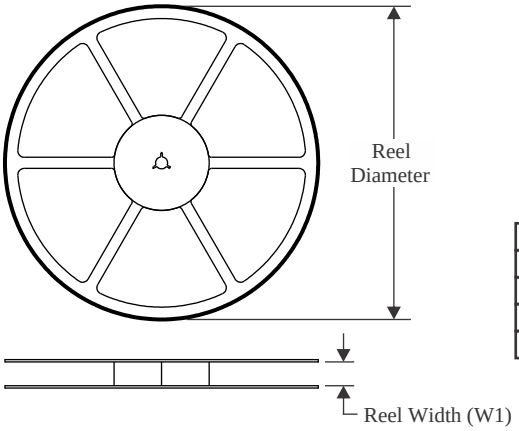

TAPE DIMENSIONS

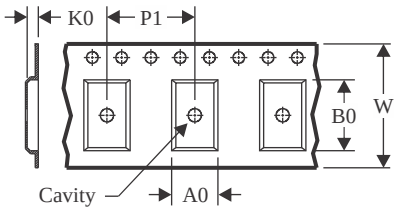

A0	Dimension designed to accommodate the component width
B0	Dimension designed to accommodate the component length
K0	Dimension designed to accommodate the component thickness
W	Overall width of the carrier tape
P1	Pitch between successive cavity centers

QUADRANT ASSIGNMENTS FOR PIN 1 ORIENTATION IN TAPE

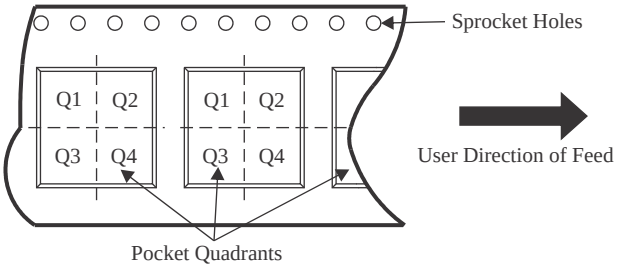

*All dimensions are nominal

Device	Package Type	Package Drawing	Pins	SPQ	Reel Diameter (mm)	Reel Width W1 (mm)	A0 (mm)	B0 (mm)	K0 (mm)	P1 (mm)	W (mm)	Pin1 Quadrant
SN74AUP2G17DCKR	SC70	DCK	6	3000	180.0	8.4	2.3	2.5	1.2	4.0	8.0	Q3
SN74AUP2G17DCKR	SC70	DCK	6	3000	178.0	9.0	2.4	2.5	1.2	4.0	8.0	Q3
SN74AUP2G17DCKR	SC70	DCK	6	3000	178.0	9.2	2.4	2.4	1.22	4.0	8.0	Q3
SN74AUP2G17DRYR	SON	DRY	6	5000	180.0	9.5	1.15	1.6	0.75	4.0	8.0	Q1
SN74AUP2G17DRYRG4	SON	DRY	6	5000	180.0	9.5	1.15	1.6	0.75	4.0	8.0	Q1
SN74AUP2G17DSFR	SON	DSF	6	5000	180.0	8.4	1.16	1.16	0.5	4.0	8.0	Q2
SN74AUP2G17YFPR	DSBGA	YFP	6	3000	178.0	9.2	0.89	1.29	0.62	4.0	8.0	Q1

TAPE AND REEL BOX DIMENSIONS

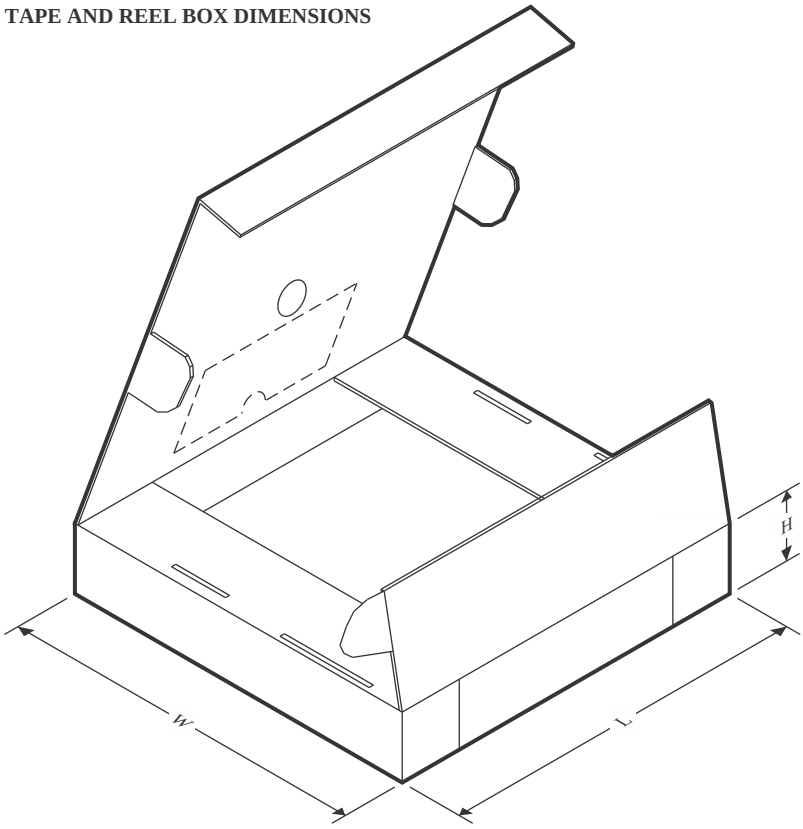

*All dimensions are nominal

Device	Package Type	Package Drawing	Pins	SPQ	Length (mm)	Width (mm)	Height (mm)
SN74AUP2G17DCKR	SC70	DCK	6	3000	210.0	185.0	35.0
SN74AUP2G17DCKR	SC70	DCK	6	3000	180.0	180.0	18.0
SN74AUP2G17DCKR	SC70	DCK	6	3000	180.0	180.0	18.0
SN74AUP2G17DRYR	SON	DRY	6	5000	184.0	184.0	19.0
SN74AUP2G17DRYRG4	SON	DRY	6	5000	184.0	184.0	19.0
SN74AUP2G17DSFR	SON	DSF	6	5000	210.0	185.0	35.0
SN74AUP2G17YFPR	DSBGA	YFP	6	3000	220.0	220.0	35.0

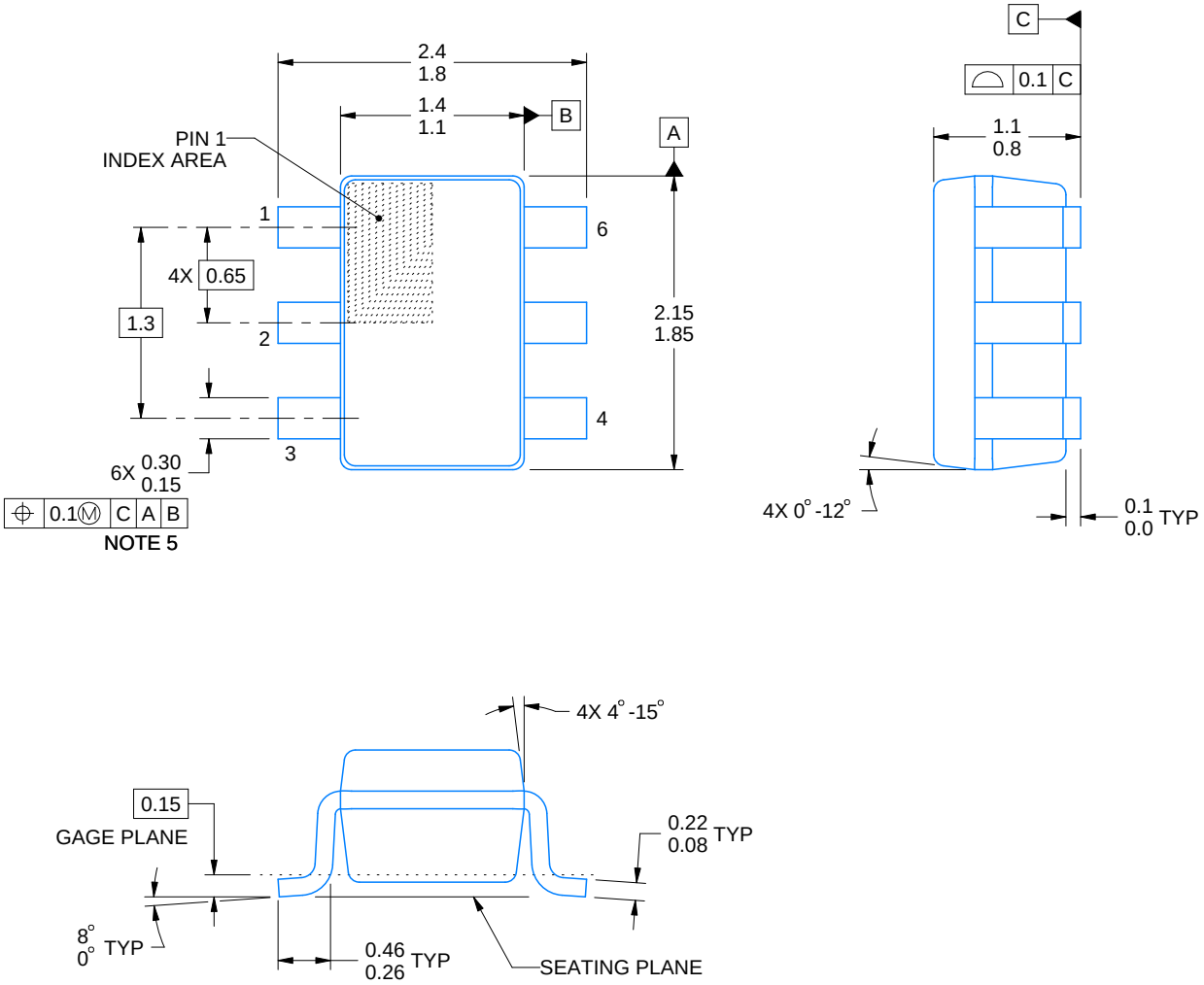

4214835/D 11/2024

NOTES:

1. All linear dimensions are in millimeters. Any dimensions in parenthesis are for reference only. Dimensioning and tolerancing per ASME Y14.5M.
2. This drawing is subject to change without notice.
3. Body dimensions do not include mold flash or protrusion. Mold flash and protrusion shall not exceed 0.15 per side.
4. Falls within JEDEC MO-203 variation AB.

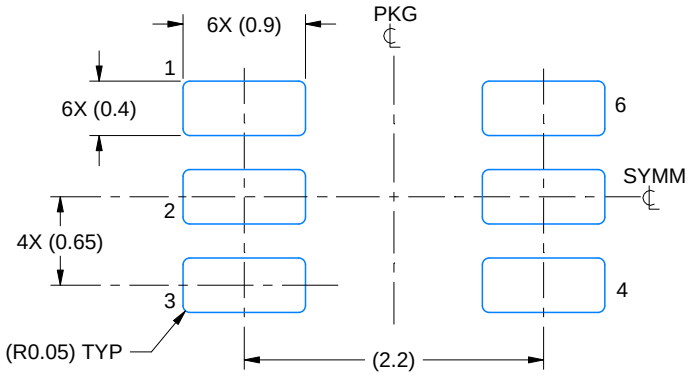

LAND PATTERN EXAMPLE
EXPOSED METAL SHOWN
SCALE:18X

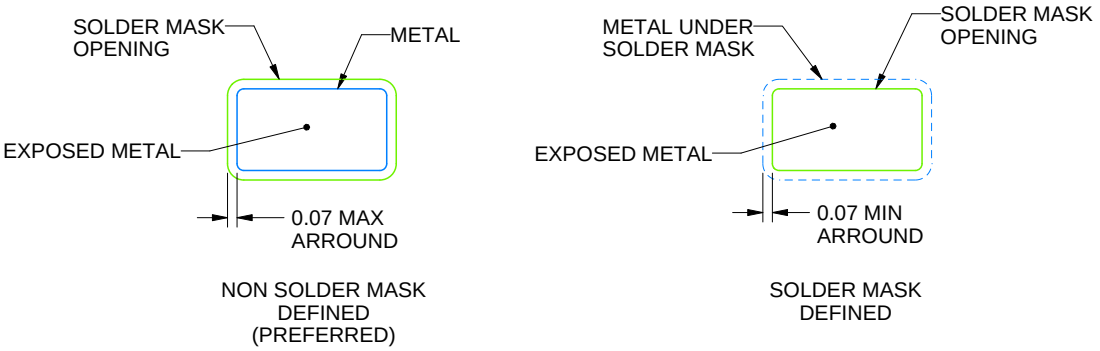

SOLDER MASK DETAILS

4214835/D 11/2024

NOTES: (continued)

5. Publication IPC-7351 may have alternate designs.
6. Solder mask tolerances between and around signal pads can vary based on board fabrication site.

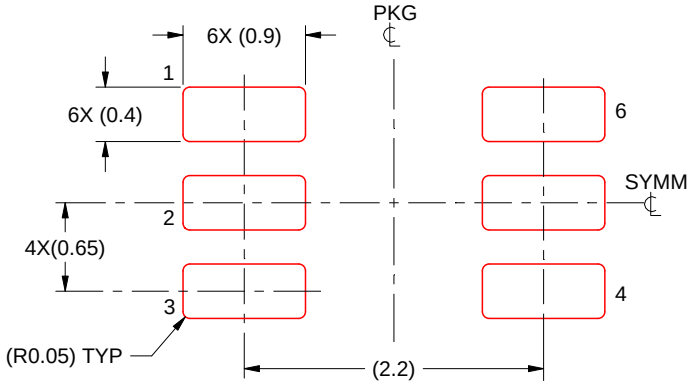

SOLDER PASTE EXAMPLE
BASED ON 0.125 THICK STENCIL
SCALE:18X

4214835/D 11/2024

NOTES: (continued)

7. Laser cutting apertures with trapezoidal walls and rounded corners may offer better paste release. IPC-7525 may have alternate design recommendations.
8. Board assembly site may have different recommendations for stencil design.

Images above are just a representation of the package family, actual package may vary.
Refer to the product data sheet for package details.

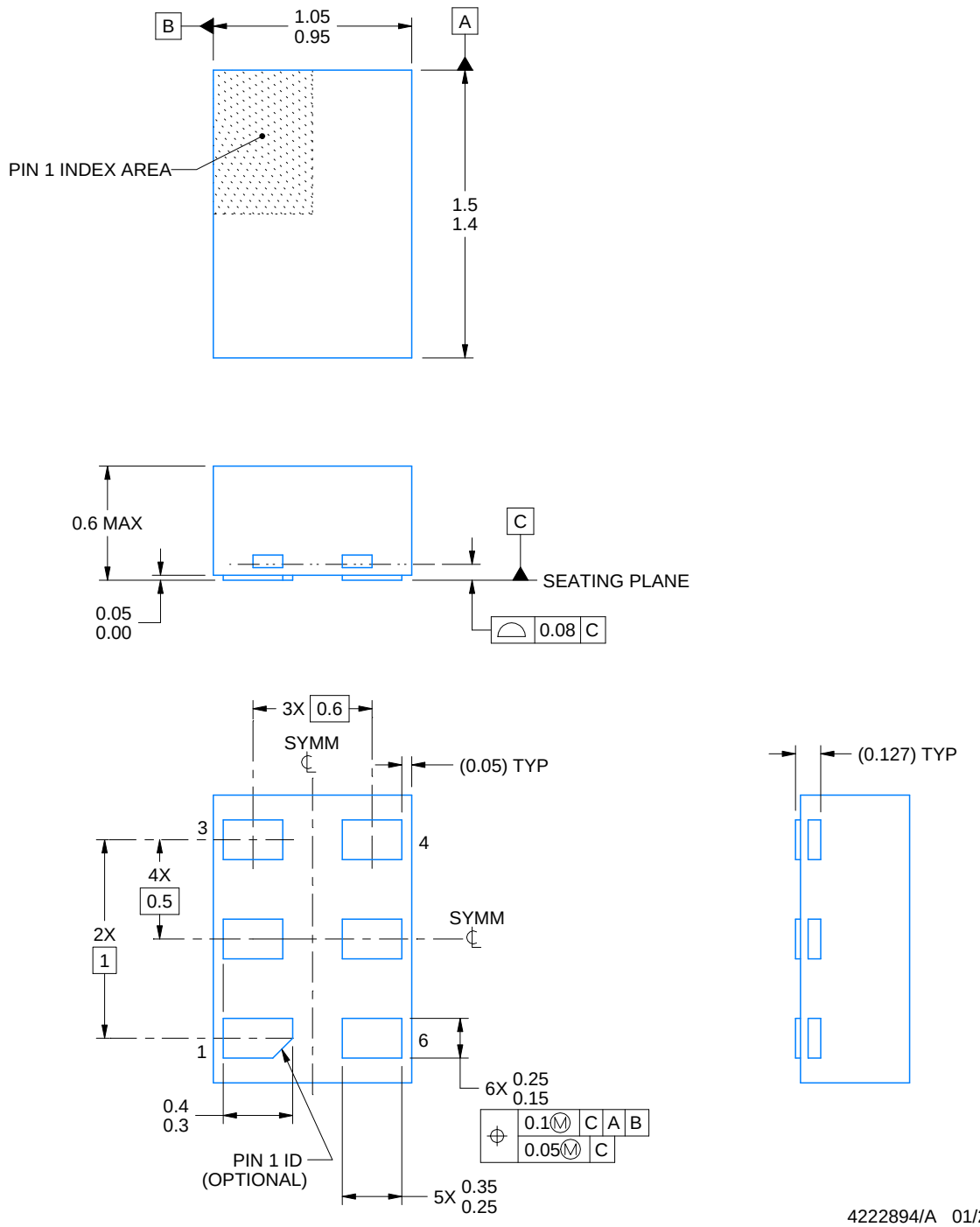

NOTES:

1. All linear dimensions are in millimeters. Any dimensions in parenthesis are for reference only. Dimensioning and tolerancing per ASME Y14.5M.
2. This drawing is subject to change without notice.

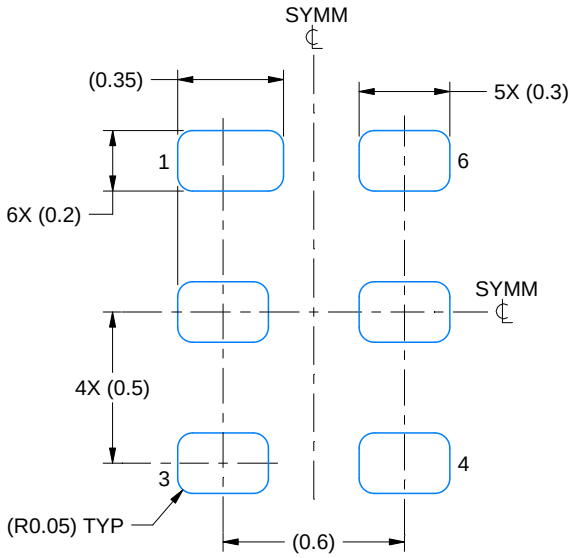

LAND PATTERN EXAMPLE
1:1 RATIO WITH PKG SOLDER PADS
EXPOSED METAL SHOWN
SCALE:40X

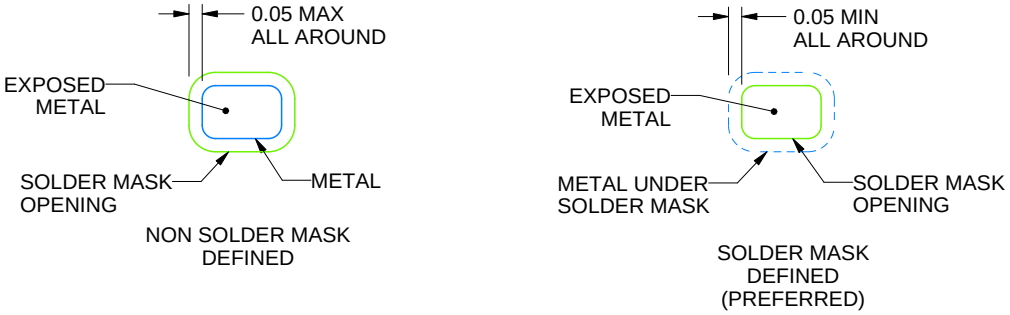

SOLDER MASK DETAILS

4222894/A 01/2018

NOTES: (continued)

3. For more information, see QFN/SON PCB application report in literature No. SLUA271 (www.ti.com/lit/slua271).

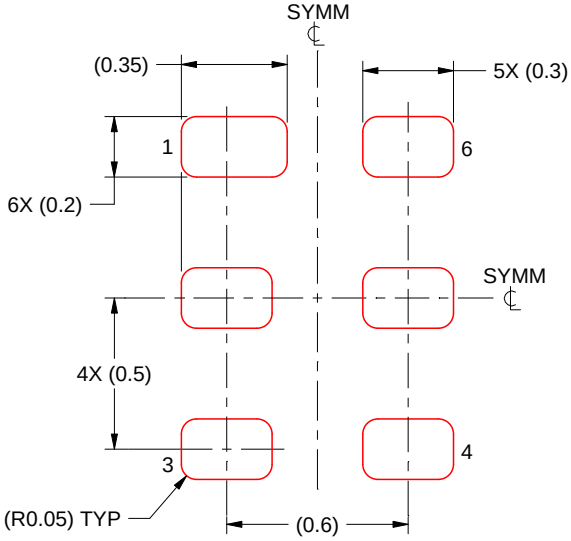

SOLDER PASTE EXAMPLE
BASED ON 0.075 - 0.1 mm THICK STENCIL
SCALE:40X

4222894/A 01/2018

NOTES: (continued)

4. Laser cutting apertures with trapezoidal walls and rounded corners may offer better paste release. IPC-7525 may have alternate design recommendations.

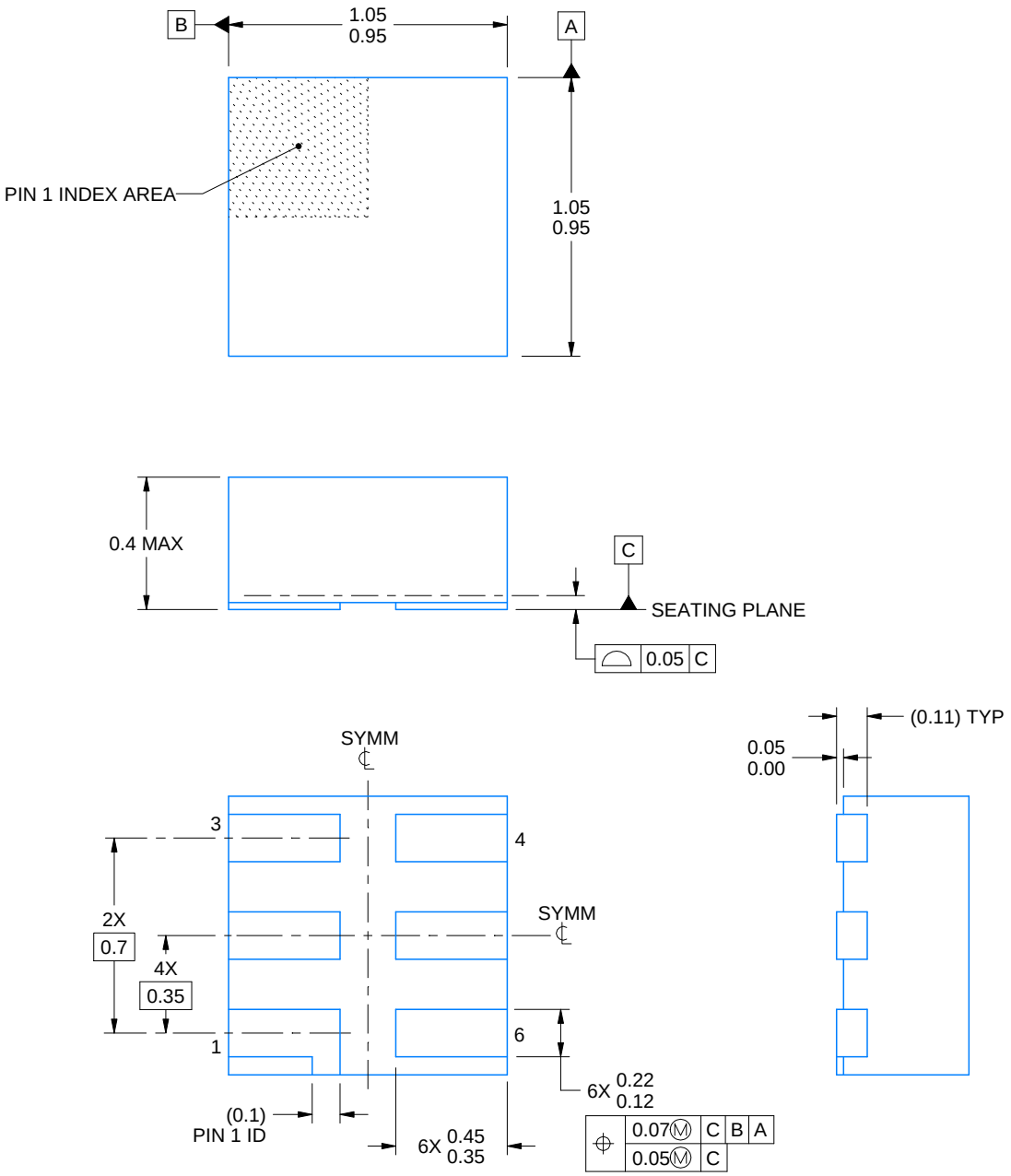

4220597/B 06/2022

NOTES:

1. All linear dimensions are in millimeters. Any dimensions in parenthesis are for reference only. Dimensioning and tolerancing per ASME Y14.5M.
2. This drawing is subject to change without notice.
3. Reference JEDEC registration MO-287, variation X2AAF.

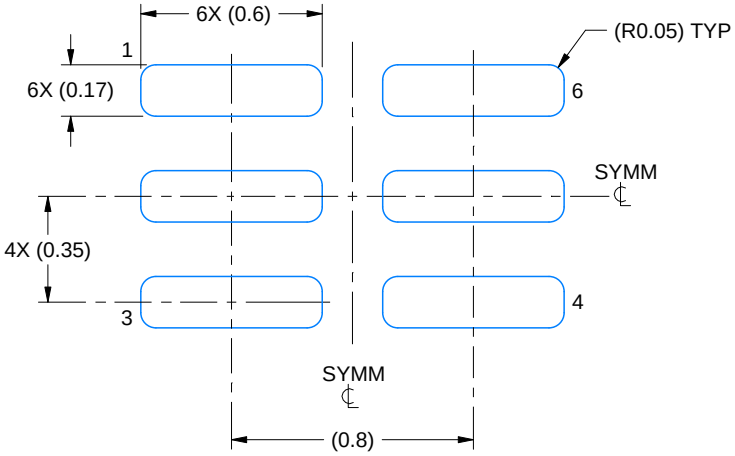

LAND PATTERN EXAMPLE
EXPOSED METAL SHOWN
SCALE:40X

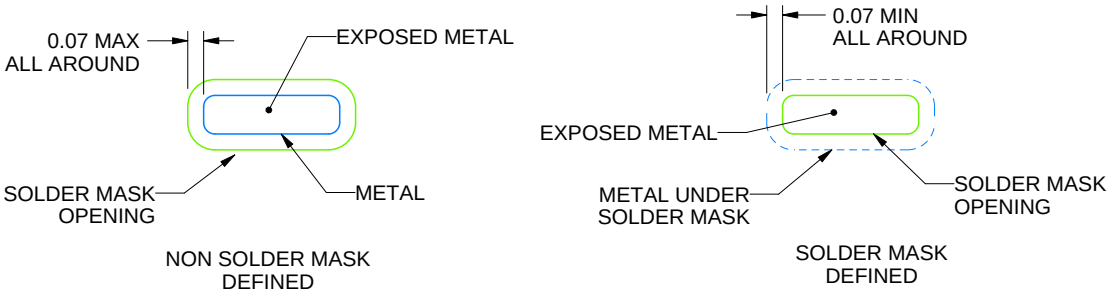

SOLDER MASK DETAILS

4220597/B 06/2022

NOTES: (continued)

4. For more information, see Texas Instruments literature number SLUA271 (www.ti.com/lit/slua271).

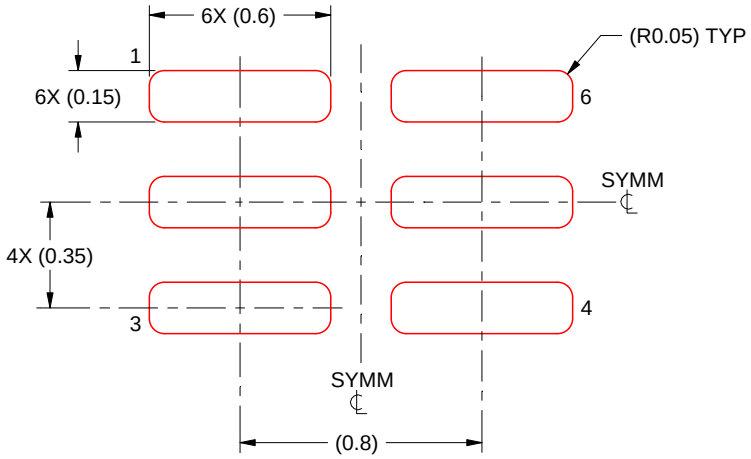

SOLDER PASTE EXAMPLE
BASED ON 0.09 mm THICK STENCIL

PRINTED SOLDER COVERAGE BY AREA UNDER PACKAGE
SCALE:40X

4220597/B 06/2022

4. Laser cutting apertures with trapezoidal walls and rounded corners may offer better paste release. IPC-7525 may have alternate design recommendations.

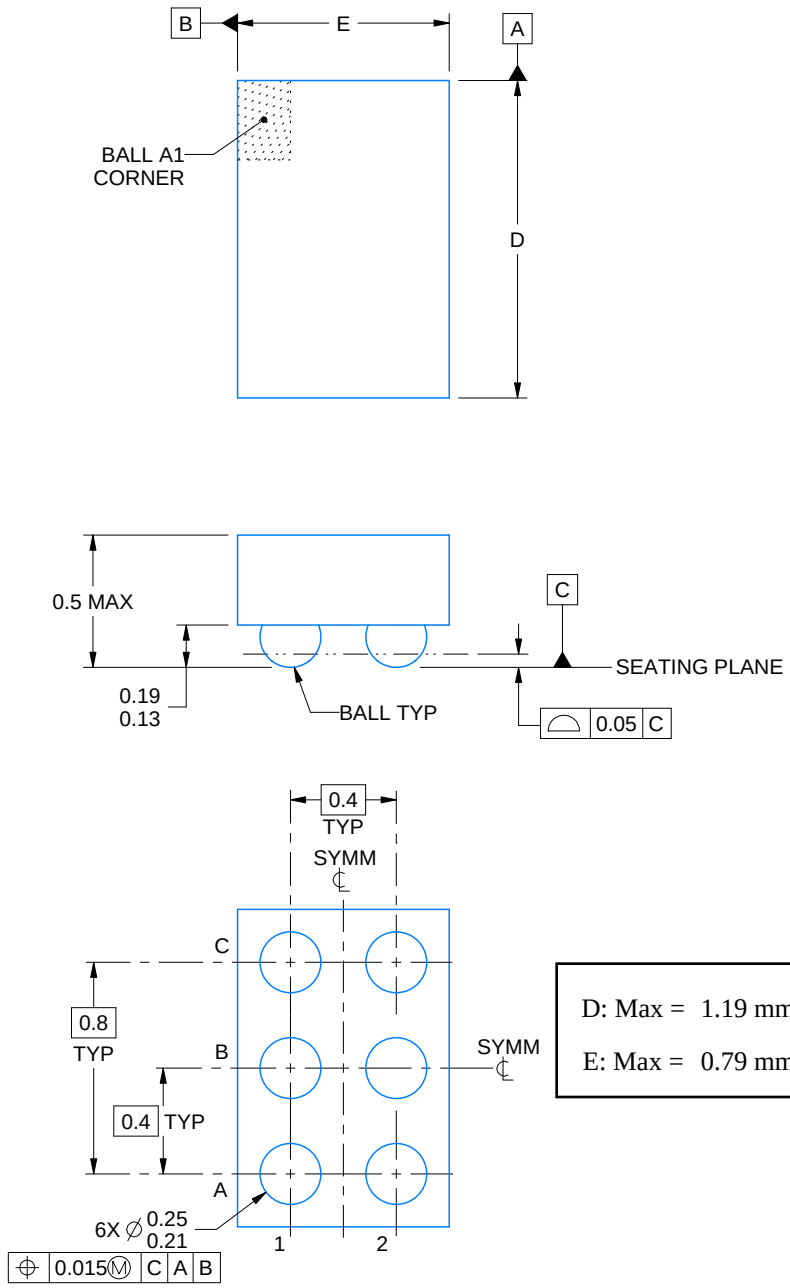

D: Max = 1.19 mm, Min = 1.13 mm

E: Max = 0.79 mm, Min = 0.73 mm

4223410/A 11/2016

NOTES:

1. All linear dimensions are in millimeters. Any dimensions in parenthesis are for reference only. Dimensioning and tolerancing per ASME Y14.5M.
2. This drawing is subject to change without notice.

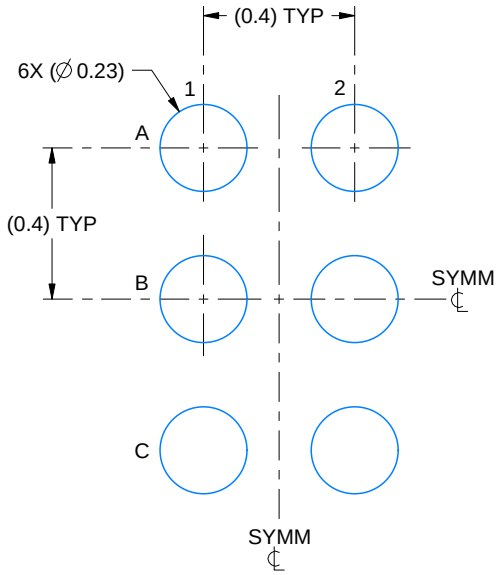

LAND PATTERN EXAMPLE
SCALE:50X

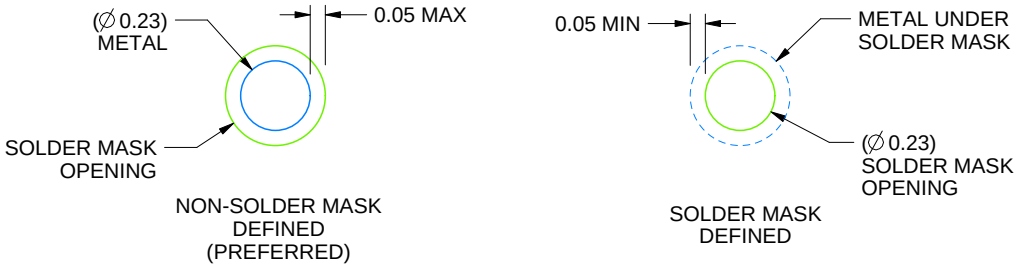

SOLDER MASK DETAILS
NOT TO SCALE

4223410/A 11/2016

NOTES: (continued)

3. Final dimensions may vary due to manufacturing tolerance considerations and also routing constraints.
   For more information, see Texas Instruments literature number SNVA009 (www.ti.com/lit/snva009).

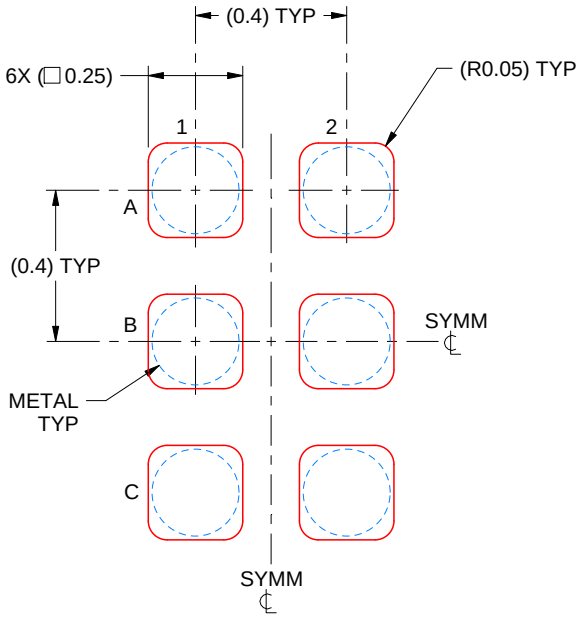

SOLDER PASTE EXAMPLE
BASED ON 0.1 mm THICK STENCIL
SCALE:50X

4223410/A 11/2016

NOTES: (continued)

4. Laser cutting apertures with trapezoidal walls and rounded corners may offer better paste release.

IMPORTANT NOTICE AND DISCLAIMER

TI PROVIDES TECHNICAL AND RELIABILITY DATA (INCLUDING DATA SHEETS), DESIGN RESOURCES (INCLUDING REFERENCE DESIGNS), APPLICATION OR OTHER DESIGN ADVICE, WEB TOOLS, SAFETY INFORMATION, AND OTHER RESOURCES “AS IS” AND WITH ALL FAULTS, AND DISCLAIMS ALL WARRANTIES, EXPRESS AND IMPLIED, INCLUDING WITHOUT LIMITATION ANY IMPLIED WARRANTIES OF MERCHANTABILITY, FITNESS FOR A PARTICULAR PURPOSE OR NON-INFRINGEMENT OF THIRD PARTY INTELLECTUAL PROPERTY RIGHTS.

These resources are intended for skilled developers designing with TI products. You are solely responsible for (1) selecting the appropriate TI products for your application, (2) designing, validating and testing your application, and (3) ensuring your application meets applicable standards, and any other safety, security, regulatory or other requirements.

These resources are subject to change without notice. TI grants you permission to use these resources only for development of an application that uses the TI products described in the resource. Other reproduction and display of these resources is prohibited. No license is granted to any other TI intellectual property right or to any third party intellectual property right. TI disclaims responsibility for, and you will fully indemnify TI and its representatives against, any claims, damages, costs, losses, and liabilities arising out of your use of these resources.

TI’s products are provided subject to TI’s Terms of Sale or other applicable terms available either on ti.com or provided in conjunction with such TI products. TI’s provision of these resources does not expand or otherwise alter TI’s applicable warranties or warranty disclaimers for TI products.

TI objects to and rejects any additional or different terms you may have proposed.

Mailing Address: Texas Instruments, Post Office Box 655303, Dallas, Texas 75265
Copyright © 2025, Texas Instruments Incorporated