Burr-Brown Products from Texas Instruments

# ADS7861

SBAS110D – DECEMBER 1998 – REVISED AUGUST 2007

# Dual, 500kSPS, 12-Bit, 2 + 2 Channel, Simultaneous Sampling ANALOG-TO-DIGITAL CONVERTER

## FEATURES

- 4 INPUT CHANNELS
- FULLY DIFFERENTIAL INPUTS
- 2µs TOTAL THROUGHPUT PER CHANNEL
- NO MISSING CODES
- 1MHz EFFECTIVE SAMPLING RATE
- LOW POWER: 40mW
- SSI SERIAL INTERFACE
- OPERATING TEMPERATURE RANGE: –40°C to +125°C

## APPLICATIONS

- MOTOR CONTROL
- MULTI-AXIS POSITIONING SYSTEMS
- 3-PHASE POWER CONTROL

## DESCRIPTION

The ADS7861 is a dual, 12-bit, 500kSPS, Analog-to-Digital (A/D) converter with four fully differential input channels grouped into two pairs for high speed, simultaneous signal acquisition. Inputs to the sample-and-hold amplifiers are fully differential and are maintained differential to the input of the A/D converter. This provides excellent common-mode rejection of 80dB at 50kHz which is important in high noise environments.

The ADS7861 offers a high-speed, dual serial interface and control inputs to minimize software overhead. The output data for each channel is available as a 12-bit word. The ADS7861 is offered in both an SSOP-24 and a QFN-32 package and is fully specified over the –40°C to +125°C operating range.

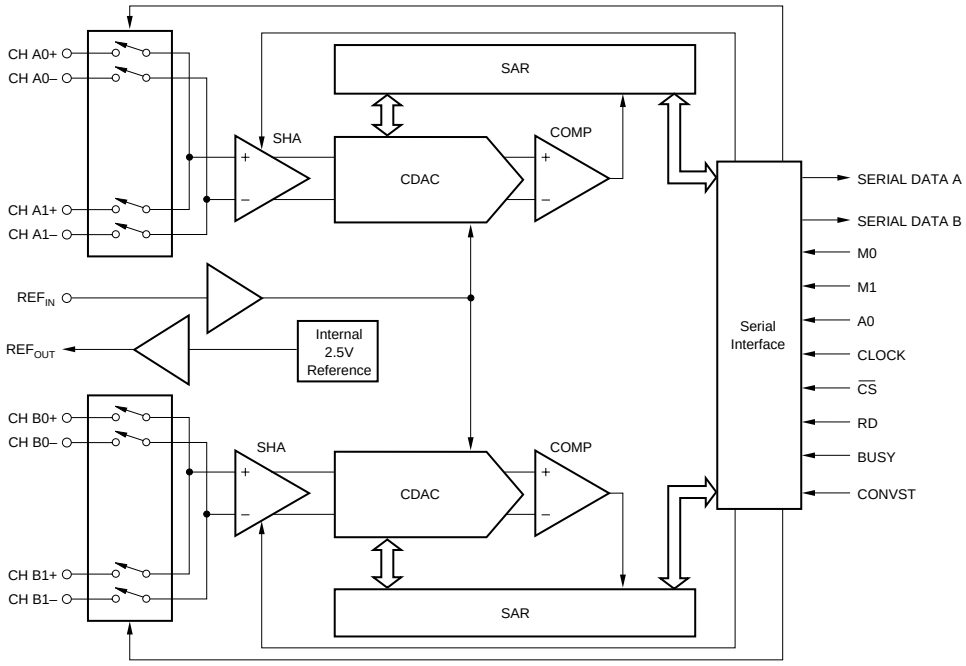


Please be aware that an important notice concerning availability, standard warranty, and use in critical applications of Texas Instruments semiconductor products and disclaimers thereto appears at the end of this data sheet.

All trademarks are the property of their respective owners.

PRODUCTION DATA information is current as of publication date. Products conform to specifications per the terms of Texas Instruments standard warranty. Production processing does not necessarily include testing of all parameters.

Copyright © 1998-2007, Texas Instruments Incorporated

TEXAS INSTRUMENTS
www.ti.com

## ABSOLUTE MAXIMUM RATINGS[1]

| | |
|---|---|
| Analog Inputs to AGND, Any Channel Input | –0.3V to ($+V_D$ + 0.3V) |
| $REF_{IN}$ | –0.3V to ($+V_D$ + 0.3V) |
| Digital Inputs to DGND | –0.3V to ($+V_D$ + 0.3V) |
| Ground Voltage Differences: AGND, DGND | ±0.3V |
| $+V_D$ to AGND | –0.3V to +6V |
| Power Dissipation | 325mW |
| Maximum Junction Temperature | +150°C |
| Operating Temperature Range | –40°C to +125°C |
| Storage Temperature Range | –65°C to +150°C |

NOTE: (1) Stresses above these ratings may cause permanent damage. Exposure to absolute maximum conditions for extended periods may degrade device reliability.

## ELECTROSTATIC DISCHARGE SENSITIVITY

This integrated circuit can be damaged by ESD. Texas Instruments recommends that all integrated circuits be handled with appropriate precautions. Failure to observe proper handling and installation procedures can cause damage.

ESD damage can range from subtle performance degradation to complete device failure. Precision integrated circuits may be more susceptible to damage because very small parametric changes could cause the device not to meet its published specifications.

## PACKAGE/ORDERING INFORMATION

For the most current package and ordering information, see the Package Option Addendum at the end of this document, or see the TI website at www.ti.com.

## TRUTH TABLE

| M0 | M1 | A0 | TWO-CHANNEL/FOUR-CHANNEL OPERATION | DATA ON SERIAL OUTPUTS | CHANNELS CONVERTED |
|---|---|---|---|---|---|
| 0 | 0 | 0 | Two Channel | A and B | A0, B0 |
| 0 | 0 | 1 | Two Channel | A and B | A1, B1 |
| 0 | 1 | 0 | Two Channel | A Only | A0, B0 |
| 0 | 1 | 1 | Two Channel | A Only | A1, B1 |
| 1 | 0 | X | Four Channel | A and B | Sequential |
| 1 | 1 | X | Four Channel | A Only | Sequential |

X = Don't Care.

## BASIC CIRCUIT CONFIGURATION

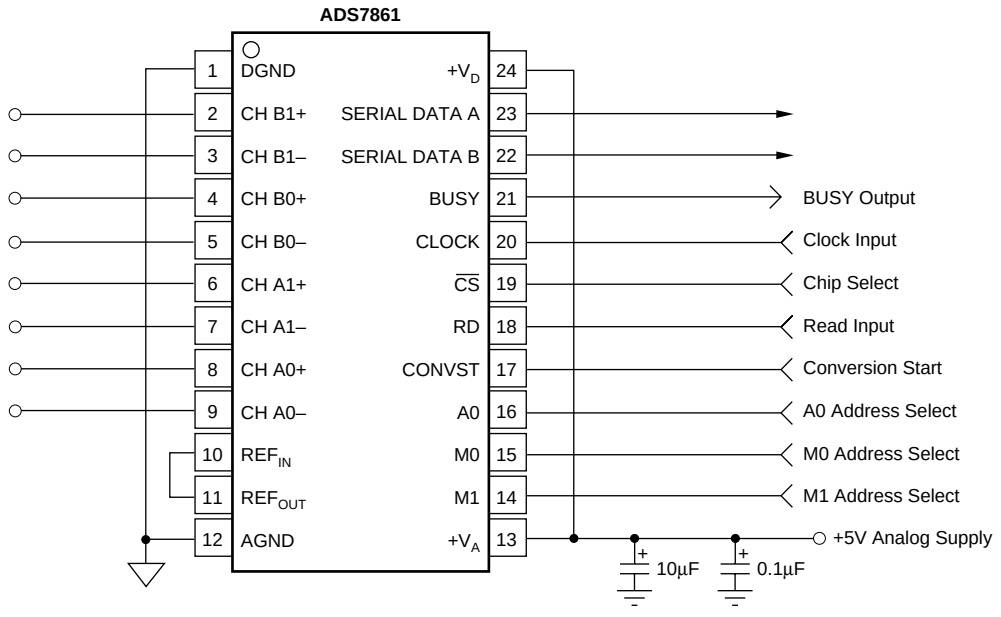

# ELECTRICAL CHARACTERISTICS

Over recommended operating free-air temperature range at $T_A$ = –40°C to +125°C, $+V_A + V_D$ = +5V, $V_{REF}$ = internal +2.5V, $f_{CLK}$ = 8MHz, and $f_{SAMPLE}$ = 500kSPS, unless otherwise noted.

| PARAMETER | CONDITIONS | ADS7861I, E | | | ADS7861IB, EB | | | UNITS |
|---|---|---|---|---|---|---|---|---|
| | | MIN | TYP | MAX | MIN | TYP | MAX | |
| **RESOLUTION** | | | | 12 | | | * | Bits |
| **ANALOG INPUT** | | | | | | | | |
| Input Voltage Range-Bipolar | $V_{CENTER}$ = Internal $V_{REF}$ at 2.5V | $-V_{REF}$ | | $+V_{REF}$ | * | | * | V |
| Input Capacitance | | | 15 | | | * | | pF |
| Input Leakage Current | | | ±1 | | | * | | µA |
| **SYSTEM PERFORMANCE** | | | | | | | | |
| No Missing Codes | | 12 | | | * | | | Bits |
| Integral Linearity | | | ±0.75 | ±2 | | ±0.5 | ±1 | LSB |
| Integral Linearity Match | | | 0.5 | ±1 | | * | * | LSB |
| Differential Linearity | | | ±1 | | | ±0.5 | ±1 | LSB |
| Bipolar Offset Error | $T_A$ = –40°C to +85°C | | ±0.5 | ±3 | | * | * | LSB |
| | $T_A$ = –40°C to +125°C | | ±0.5 | ±3.5 | | * | * | LSB |
| Bipolar Offset Error Match | | | | 3 | | | 2 | LSB |
| Positive Gain Error | Referenced to $REF_{IN}$ | | ±0.15 | ±0.75 | | ±0.10 | ±0.50 | % of FSR |
| Positive Gain Error Match | | | | 2 | | | 1 | LSB |
| Negative Gain Error | Referenced to $REF_{IN}$ | | ±0.15 | ±0.75 | | ±0.10 | ±0.50 | % of FSR |
| Negative Gain Error Match | | | | 2 | | | 1 | LSB |
| Common-Mode Rejection Ratio | At DC | | 80 | | | * | | dB |
| | $V_{IN}$ = ±1.25$V_{PP}$ at 50kHz | | 80 | | | * | | dB |
| Noise | | | 120 | | | * | | µVrms |
| Power Supply Rejection Ratio | | | 0.5 | 2 | | * | * | LSB |
| **SAMPLING DYNAMICS** | | | | | | | | |
| Conversion Time per A/D | | | 1.625 | | | * | | µs |
| Acquisition Time | | | 0.375 | | | * | | µs |
| Throughput Rate | | 500 | | | * | | | kSPS |
| Aperture Delay | | | 3.5 | | | * | | ns |
| Aperture Delay Matching | | | 100 | | | * | | ps |
| Aperture Jitter | | | 50 | | | * | | ps |
| Small-Signal Bandwidth | | | 40 | | | * | | MHz |
| **DYNAMIC CHARACTERISTICS ($V_{IN}$ = ±2.5$V_{PP}$ at 100kHz)** | | | | | | | | |
| Total Harmonic Distortion | $T_A$ = –40°C to +85°C | | | –72 | | | –76 | dB |
| | $T_A$ = –40°C to +125°C | | | –71 | | | –75 | dB |
| SINAD | | 70 | | | * | | | dB |
| Spurious Free Dynamic Range | $T_A$ = –40°C to +85°C | 72 | | | 76 | | | dB |
| | $T_A$ = –40°C to +125°C | 71 | | | 75 | | | dB |
| Channel-to-Channel Isolation | | | | –80 | | | * | dB |
| **VOLTAGE REFERENCE** | | | | | | | | |
| Internal | | 2.475 | 2.5 | 2.525 | * | * | * | V |
| Internal Drift | | | ±25 | | | * | | ppm/°C |
| Internal Noise | | | 50 | | | * | | $\mu V_{PP}$ |
| Internal Source Current | | | 2 | | | * | | mA |
| Internal Load Rejection | | | 0.005 | | | * | | mV/µA |
| Internal PSRR | | | 80 | | | * | | dB |
| External Voltage Range | | 1.2 | 2.5 | 2.6 | * | * | * | V |
| Input Current | | | 0.05 | 1 | | * | * | µA |
| Input Capacitance | | | 5 | | | * | | pF |
| **DIGITAL INPUT/OUTPUT** | | | | | | | | |
| Logic Family | | | CMOS | | | * | | |
| Logic Levels: $V_{IH}$ | $I_{IH}$ = +5µA | 3.0 | | $+V_{DD}$ + 0.3 | * | | * | V |
| $V_{IL}$ | $I_{IL}$ = +5µA | –0.3 | | 1 | * | | * | V |
| $V_{OH}$ | $I_{OH}$ = –0.5mA | 3.5 | | | * | | | V |
| $V_{OL}$ | $I_{OL}$ = –0.5mA | | | 0.4 | | | * | V |
| External Clock, Optional | | 0.2 | | 8 | * | | * | MHz |
| Data Format | | Binary Two's Complement | | | | * | | |
| **POWER SUPPLY REQUIREMENTS** | | | | | | | | |
| Power Supply Voltage, +V | | 4.75 | 5 | 5.25 | * | * | * | V |
| Quiescent Current, $+V_A$ | $T_A$ = –40°C to +85°C | | 5 | 8 | | * | * | mA |
| | $T_A$ = –40°C to +125°C | | 5 | 8.5 | | * | * | mA |
| Power Dissipation | $T_A$ = –40°C to +85°C | | 25 | 40 | | * | * | mW |
| | $T_A$ = –40°C to +125°C | | 25 | 42.5 | | * | * | mW |

* Specifications same as ADS7861I, ADS7861E.

## PIN CONFIGURATIONS

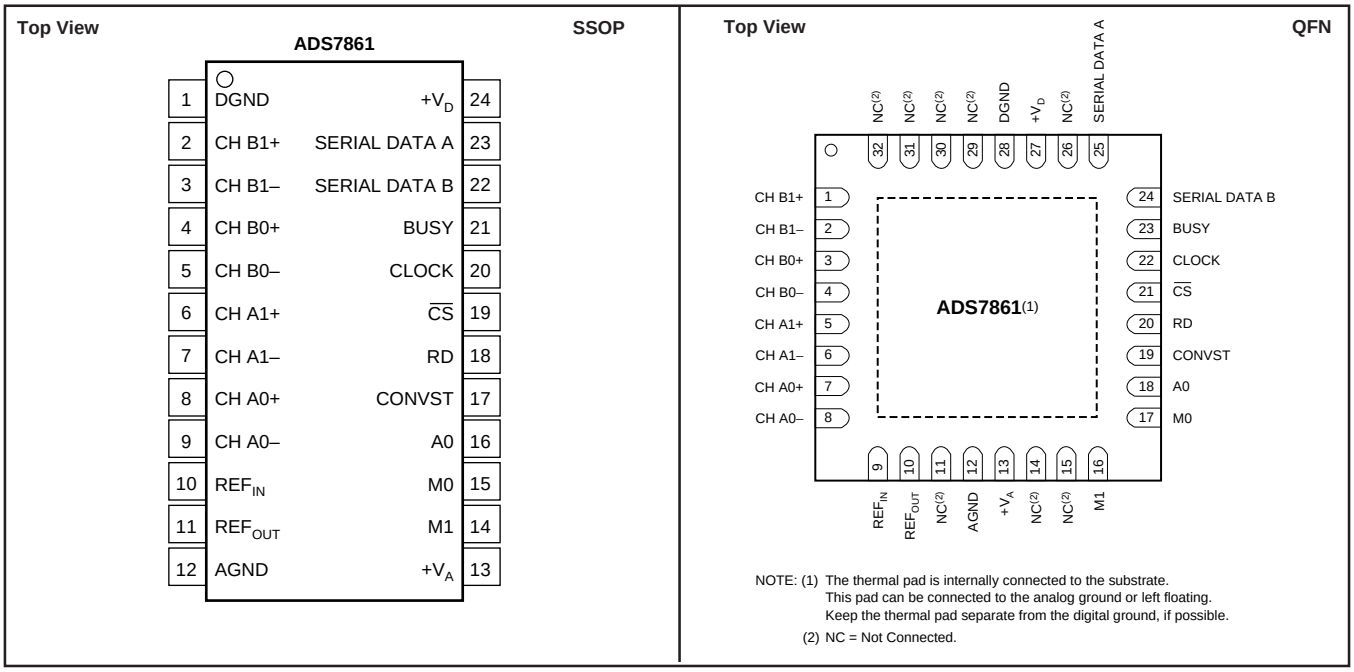


## PIN DESCRIPTIONS

| SSOP PIN | QFN PIN | NAME | DESCRIPTION |
|---|---|---|---|
| 1 | 28 | DGND | Digital Ground. Connect directly to analog ground (pin 12). |
| 2 | 1 | CH B1+ | Noninverting Input Channel B1 |
| 3 | 2 | CH B1– | Inverting Input Channel B1 |
| 4 | 3 | CH B0+ | Noninverting Input Channel B0 |
| 5 | 4 | CH B0– | Inverting Input Channel B0 |
| 6 | 5 | CH A1+ | Noninverting Input Channel A1 |
| 7 | 6 | CH A1– | Inverting Input Channel A1 |
| 8 | 7 | CH A0+ | Noninverting Input Channel A0 |
| 9 | 8 | CH A0– | Inverting Input Channel A0 |
| 10 | 9 | $REF_{IN}$ | Reference Input |
| 11 | 10 | $REF_{OUT}$ | 2.5V Reference Output |
| 12 | 12 | AGND | Analog Ground. Connect directly to digital ground (pin 1). |
| 13 | 13 | $+V_A$ | Analog Power Supply, +5VDC. Connect directly to digital power supply (pin 24). Decouple to analog ground with a 0.1µF ceramic capacitor and a 10µF tantalum capacitor. |
| 14 | 16 | M1 | Selects between the Serial Outputs. When M1 is LOW, both Serial Output A and Serial Output B are selected for data transfer. When M1 is HIGH, Serial output A is configured for both Channel A data and Channel B data; Serial Output B goes into tri-state (i.e., high impedance). |
| 15 | 17 | M0 | Selects between two-channel and four-channel operation. When M0 is LOW, two-channel operation is selected and operates in conjunction with A0. When A0 is HIGH, Channel A1 and Channel B1 are being converted. When A0 is LOW, Channel A0 and Channel B0 are being converted. When M0 is HIGH, four-channel operation is selected. In this mode, all four channels are converted in sequence starting with Channels A0 and B0, followed by Channels A1 and B1. |
| 16 | 18 | A0 | A0 operates in conjunction with M0. With M0 LOW and A0 HIGH, Channel A1 and Channel B1 are converted. With M0 LOW and A0 LOW, Channel A0 and Channel B0 are converted. |
| 17 | 19 | CONVST | Convert Start. When CONVST switches from LOW to HIGH, the device switches from the sample to hold mode, independent of the status of the external clock. |
| 18 | 20 | RD | Synchronization Pulse for the Serial Output. |
| 19 | 21 | $\overline{CS}$ | Chip Select. When LOW, the Serial Output A and Serial Output B outputs are active; when HIGH, the serial outputs are tri-stated. |
| 20 | 22 | CLOCK | An external CMOS-compatible clock can be applied to the CLOCK input to synchronize the conversion process to an external source. The CLOCK pin controls the sampling rate by the equation: CLOCK = 16 • $f_{SAMPLE}$. |
| 21 | 23 | BUSY | BUSY goes HIGH during a conversion and returns LOW after the third LSB has been transmitted on either the Serial A or Serial B output pin. |
| 22 | 24 | SERIAL DATA B | The Serial Output data word is comprised of channel information and 12 bits of data. In operation, data is valid on the falling edge of DCLOCK for 16 edges after the rising edge of RD. |
| 23 | 25 | SERIAL DATA A | The Serial Output data word is comprised of channel information and 12 bits of data. In operation, data is valid on the falling edge of DCLOCK for 16 edges after the rising edge of RD. When M1 is HIGH, both Channel A data and Channel B data are available. |
| 24 | 27 | $+V_D$ | Digital Power Supply, +5VDC. Connect directly to pin 13. Must be $\leq +V_A$. |

# TYPICAL CHARACTERISTICS

At $T_A$ = +25°C, $+V_A + V_D$ = +5V, and $V_{REF}$ = internal +2.5V, $f_{CLK}$ = 8MHz, $f_{SAMPLE}$ = 500kSPS, unless otherwise noted.

FREQUENCY SPECTRUM
(4096 Point FFT; $f_{IN}$ = 99.9kHz, –0.5dB)

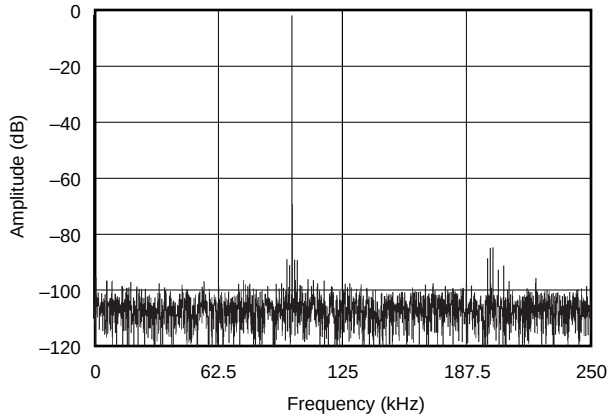


FREQUENCY SPECTRUM
(4096 Point FFT; $f_{IN}$ = 199.9kHz, –0.5dB)

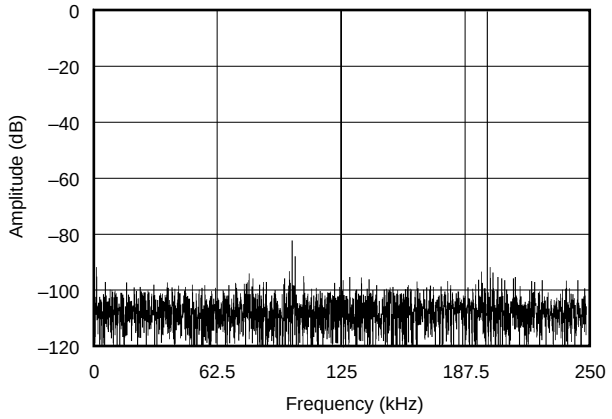


SIGNAL-TO-NOISE RATIO and
SIGNAL-TO-(NOISE+DISTORTION)
vs INPUT FREQUENCY

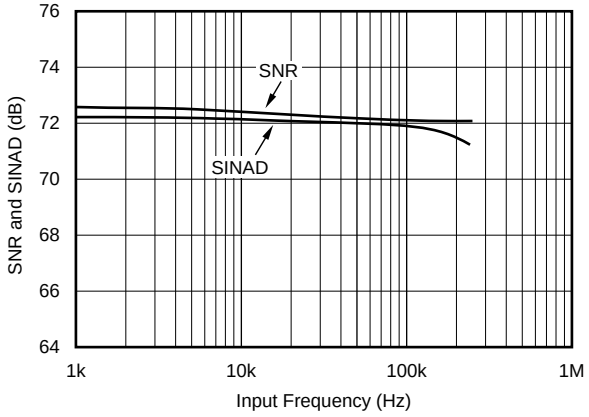


CHANGE IN SIGNAL-TO-NOISE RATIO
AND SIGNAL-TO-(NOISE+DISTORTION)
vs TEMPERATURE

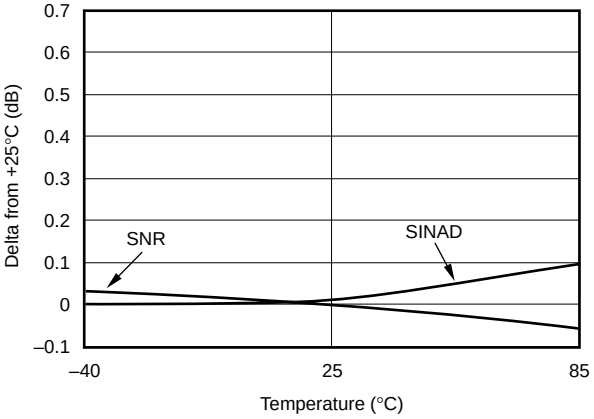


CHANGE IN SPURIOUS FREE DYNAMIC RANGE
AND TOTAL HARMONIC DISTORTION
vs TEMPERATURE

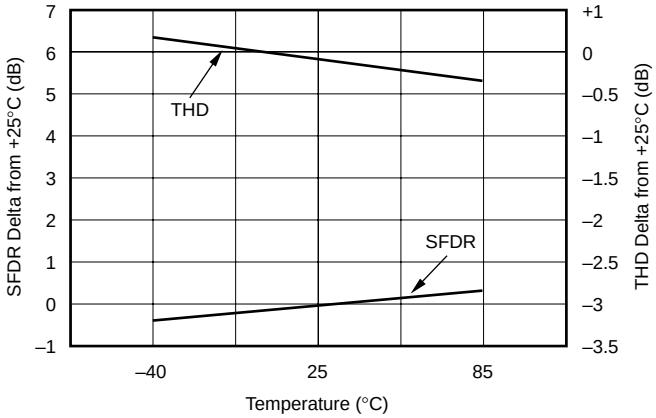


CHANGE IN POSITIVE GAIN MATCH
vs TEMPERATURE
(Maximum Deviation for All Four Channels)

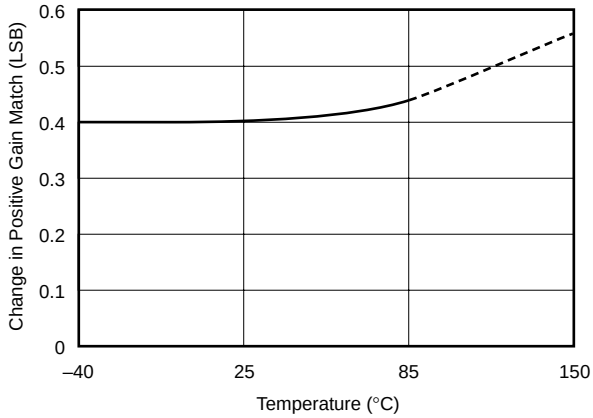

# TYPICAL CHARACTERISTICS (Cont.)

At $T_A$ = +25°C, $+V_A + V_D$ = +5V, and $V_{REF}$ = internal +2.5V, $f_{CLK}$ = 8MHz, $f_{SAMPLE}$ = 500kSPS, unless otherwise noted.

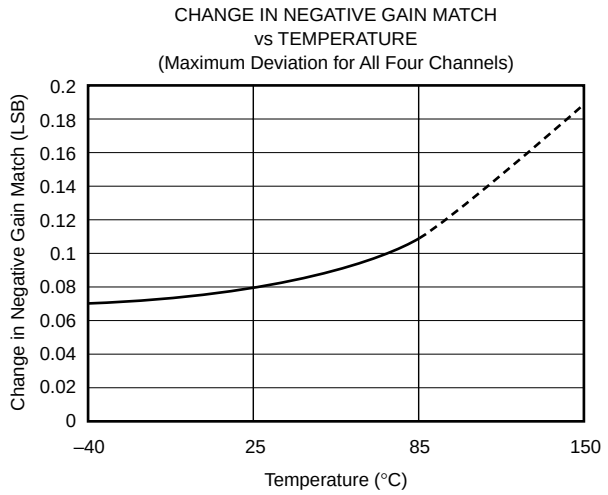


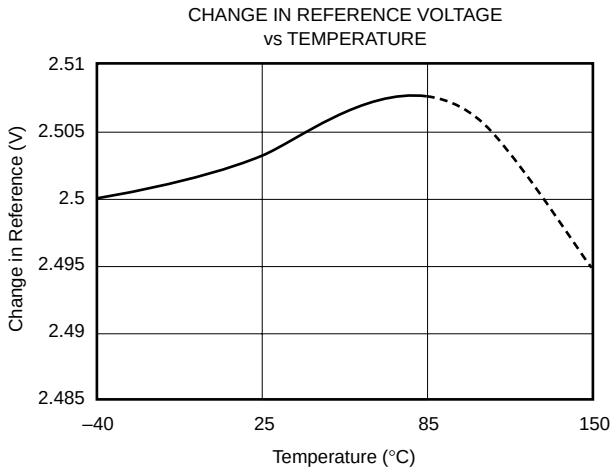


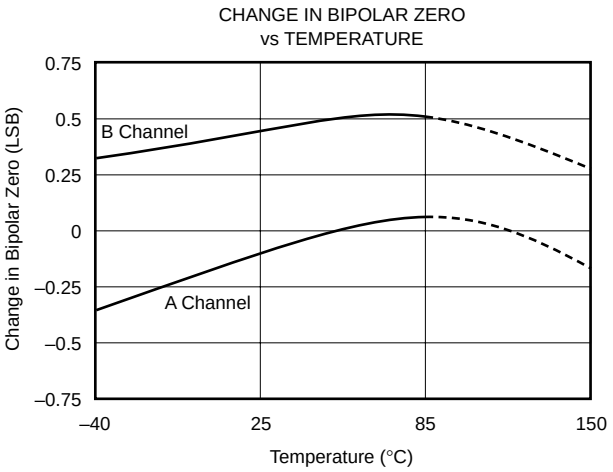


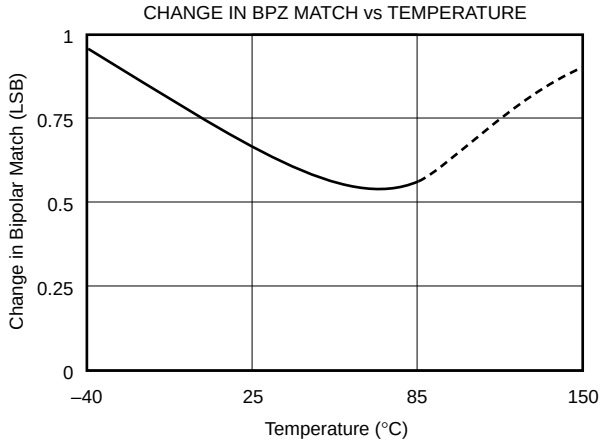


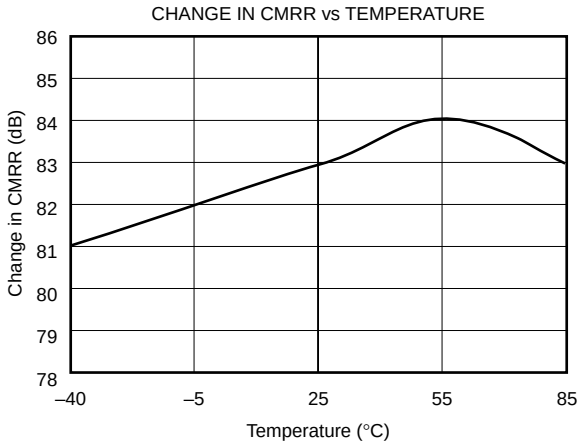


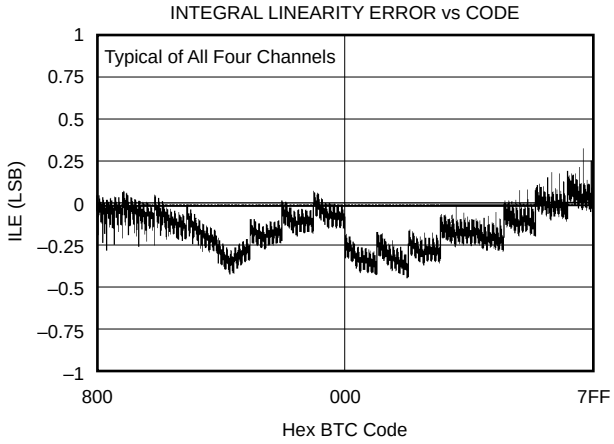

# TYPICAL CHARACTERISTICS (Cont.)

At $T_A$ = +25°C, $+V_A + V_D$ = +5V, and $V_{REF}$ = internal +2.5V, $f_{CLK}$ = 8MHz, $f_{SAMPLE}$ = 500kSPS, unless otherwise noted.

DIFFERENTIAL LINEARITY ERROR vs CODE

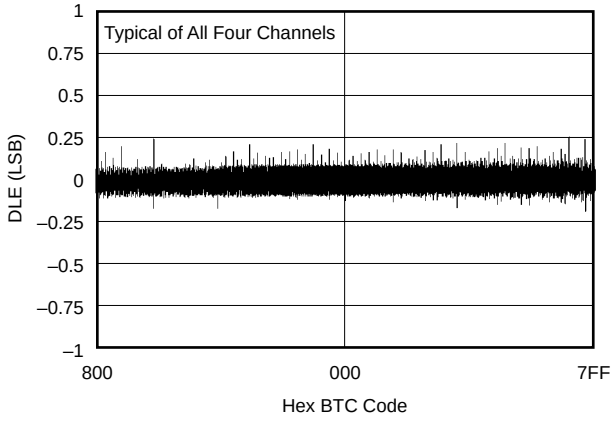


INTEGRAL LINEARITY ERROR vs TEMPERATURE

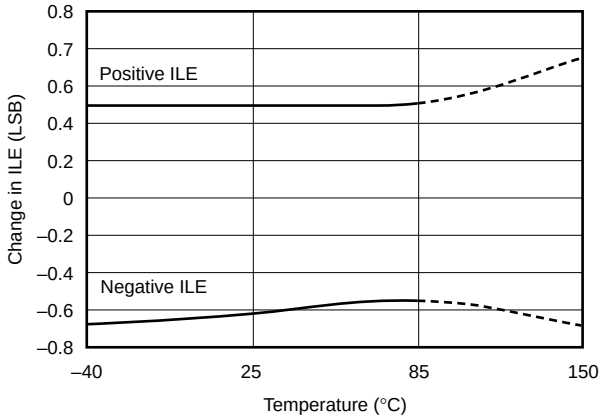


DIFFERENTIAL LINEARITY ERROR vs TEMPERATURE

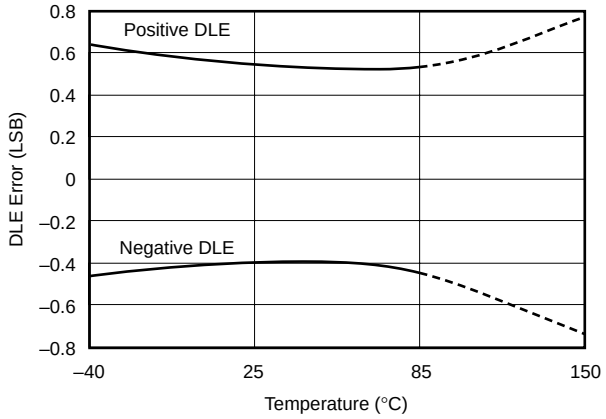


INTEGRAL LINEARITY ERROR MATCH vs CODE CHANNEL A0/CHANNEL A1 (Same Converter, Different Channels)

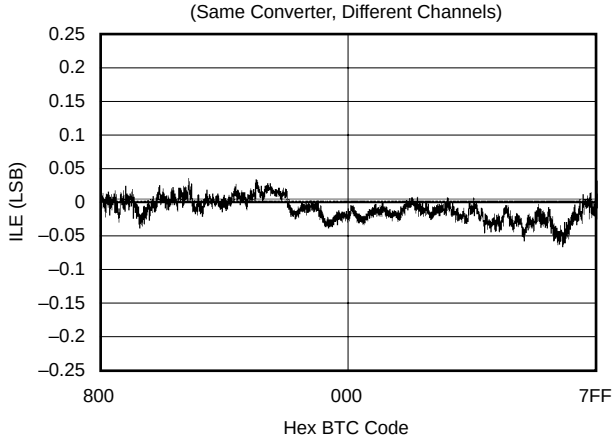


INTEGRAL LINEARITY ERROR MATCH vs CODE CHANNEL A0/CHANNEL B1 (Different Converter, Different Channels)

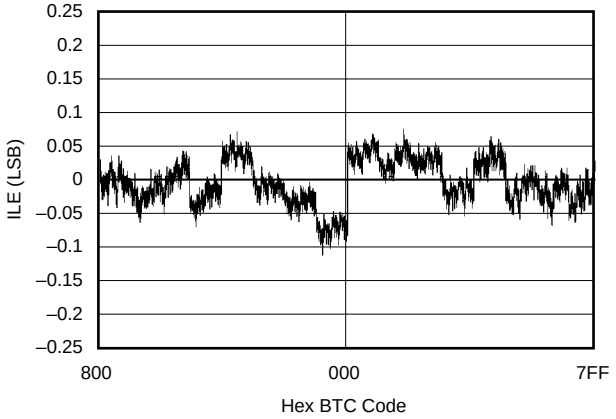


INTEGRAL LINEARITY ERROR MATCH vs TEMPERATURE Channel A0/Channel B0 (Different Converter, Different Channels)

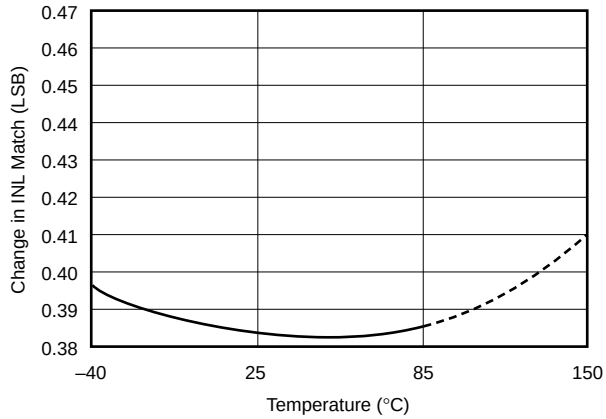

# INTRODUCTION

The ADS7861 is a high-speed, low power, dual, 12-bit A/D converter that operates from a single +5V supply. The input channels are fully differential with a typical common-mode rejection of 80dB. The part contains dual, 2µs successive approximation ADCs, two differential sample-and-hold amplifiers, an internal +2.5V reference with $REF_{IN}$ and $REF_{OUT}$ pins and a high-speed parallel interface. The ADS7861 requires an external clock. In order to achieve the maximum throughput rate of 500kSPS, the master clock must be set at 8MHz. A minimum of 16 clock cycles are required for each 12-bit conversion.

There are four analog inputs that are grouped into two channels (A and B). Channel selection is controlled by the M0, M1 and A0 pins. Each channel has two inputs (A0 and A1 and B0 and B1) that can be sampled and converted simultaneously, thus preserving the relative phase information of the signals on both analog inputs. The part accepts an analog input voltage in the range of $-V_{REF}$ to $+V_{REF}$, centered around the internal +2.5V reference. The part will also accept bipolar input ranges when a level shift circuit is used at the front end (see Figure 7).

All conversions are initiated on the ADS7861 by bringing the CONVST pin HIGH for a minimum of 15ns. CONVST HIGH places both sample-and-hold amplifiers in the hold state simultaneously and the conversion process is started on both channels. The RD pin can be connected to CONVST to simplify operation. Depending on the status of the M0, M1 and A0 pins, the ADS7861 will (a) operate in either two-channel or four-channel mode and (b) output data on both the Serial A and Serial B output or both channels can be transmitted on the A output only.

NOTE: See the Timing and Control section of this data sheet for more information.

## SAMPLE-AND-HOLD SECTION

The sample-and-hold amplifiers on the ADS7861 allow the ADCs to accurately convert an input sine wave of full-scale amplitude to 12-bit accuracy. The input bandwidth of the sample-and-hold is greater than the Nyquist rate (Nyquist equals one-half of the sampling rate) of the ADC even when the ADC is operated at its maximum throughput rate of 500kSPS. The typical small-signal bandwidth of the sample-and-hold amplifiers is 40MHz.

Typical aperture delay time or the time it takes for the ADS7861 to switch from the sample to the hold mode following the CONVST pulse is 3.5ns. The average delta of repeated aperture delay values is typically 50ps (also known as aperture jitter). These specifications reflect the ability of the ADS7861 to capture AC input signals accurately at the exact same moment in time.

## REFERENCE

Under normal operation, the $REF_{OUT}$ pin should be directly connected to the $REF_{IN}$ pin to provide an internal +2.5V reference to the ADS7861. The ADS7861 can operate, however, with an external reference in the range of 1.2V to 2.6V for a corresponding full-scale range of 2.4V to 5.2V.

The internal reference of the ADS7861 is double-buffered. If the internal reference is used to drive an external load, a buffer is provided between the reference and the load applied to pin 2 (the internal reference can typically source 2mA of current load—capacitance should not exceed 100pF). If an external reference is used, the second buffer provides isolation between the external reference and the CDAC. This buffer is also used to recharge all of the capacitors of both CDACs during conversion.

## ANALOG INPUT

The analog input is bipolar and fully differential. There are two general methods of driving the analog input of the ADS7861: single-ended or differential (see Figures 1 and 2). When the input is single-ended, the –IN input is held at the common-mode voltage. The +IN input swings around the same common voltage and the peak-to-peak amplitude is the (common-mode $+V_{REF}$) and the (common-mode $-V_{REF}$). The value of $V_{REF}$ determines the range over which the common-mode voltage may vary (see Figure 3).

When the input is differential, the amplitude of the input is the difference between the +IN and –IN input, or (+IN) – (–IN). The peak-to-peak amplitude of each input is $\pm 1/2V_{REF}$ around this common voltage. However, since the inputs are 180° out of phase, the peak-to-peak amplitude of the differential voltage is $+V_{REF}$ to $-V_{REF}$. The value of $V_{REF}$ also determines the range of the voltage that may be common to both inputs (see Figure 4).

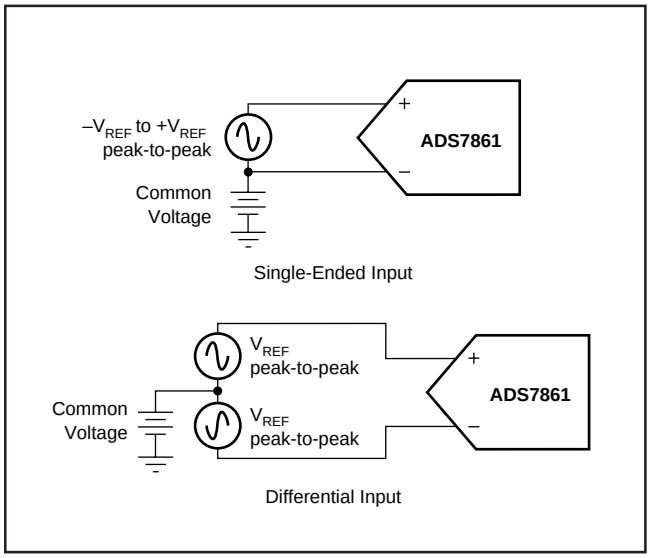


FIGURE 1. Methods of Driving the ADS7861 Single-Ended or Differential.

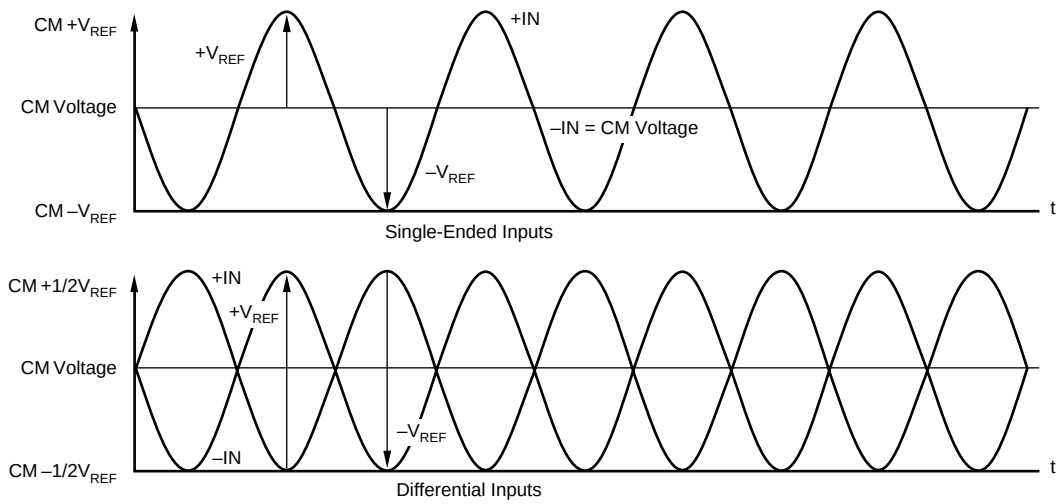


NOTES: Common-Mode Voltage (Differential Mode) = $\frac{(IN+) + (IN-)}{2}$ Common-Mode Voltage (Single-Ended Mode) = IN–.

The maximum differential voltage between +IN and –IN of the ADS7861 is $V_{REF}$. See Figures 3 and 4 for a further explanation of the common voltage range for single-ended and differential inputs.

FIGURE 2. Using the ADS7861 in the Single-Ended and Differential Input Modes.

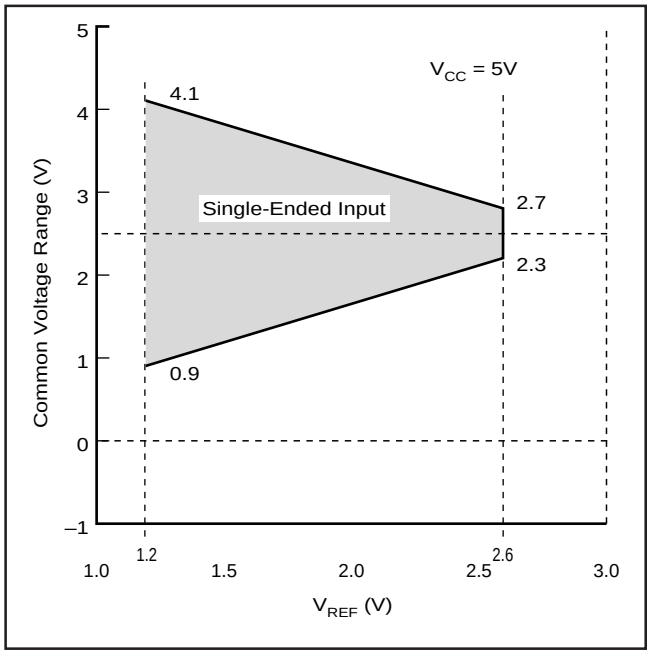


FIGURE 3. Single-Ended Input: Common-Mode Voltage Range vs $V_{REF}$.

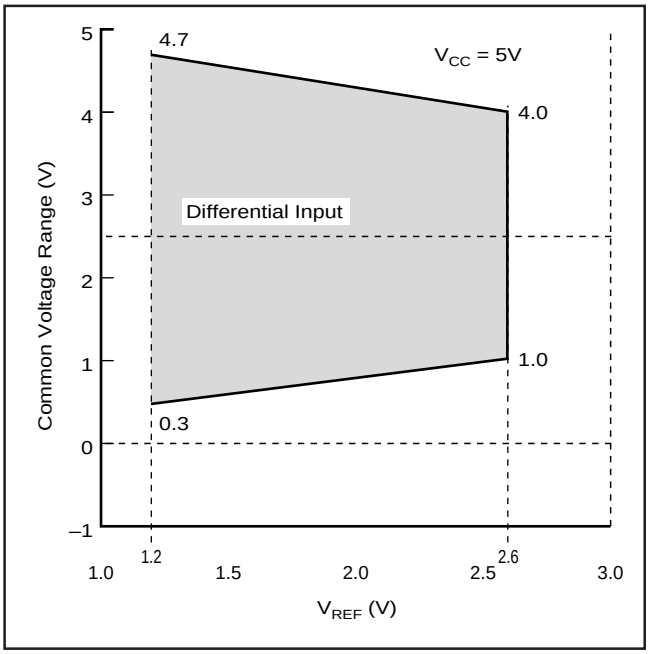


FIGURE 4. Differential Input: Common-Mode Voltage Range vs $V_{REF}$.

In each case, care should be taken to ensure that the output impedance of the sources driving the +IN and –IN inputs are matched. Otherwise, this may result in offset error, gain error and linearity error which will change with both temperature and input voltage.

The input current on the analog inputs depend on a number of factors: sample rate, input voltage, and source impedance. Essentially, the current into the ADS7861 charges the internal capacitor array during the sampling period. After this capacitance has been fully charged, there is no further input current. The source of the analog input voltage must be able to charge the input capacitance (15pF) to a 12-bit settling level within 2 clock cycles. When the converter goes into the hold mode, the input impedance is greater than 1GΩ.

Care must be taken regarding the absolute analog input voltage. The +IN input should always remain within the range of GND – 300mV to $V_{DD}$ + 0.3V.

## TRANSITION NOISE

Figure 5 shows a histogram plot for the ADS7861 following 8,000 conversions of a DC input. The DC input was set at output code 2046. All but one of the conversions had an output code result of 2046 (one of the conversions resulted in an output of 2047). The histogram reveals the excellent noise performance of the ADS7861.

## BIPOLAR INPUTS

The differential inputs of the ADS7861 were designed to accept bipolar inputs ($-V_{REF}$ and $+V_{REF}$) around the internal reference voltage (2.5V), which corresponds to a 0V to 5V input range with a 2.5V reference. By using a simple op amp circuit featuring a single amplifier and four external resistors, the ADS7861 can be configured to except bipolar inputs. The conventional ±2.5V, ±5V, and ±10V input ranges can be interfaced to the ADS7861 using the resistor values shown in Figure 7.

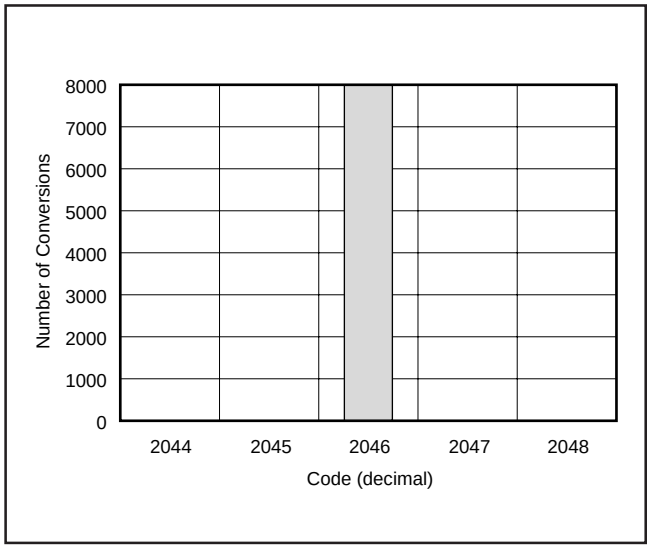


FIGURE 5. Histogram of 8,000 Conversions of a DC Input.

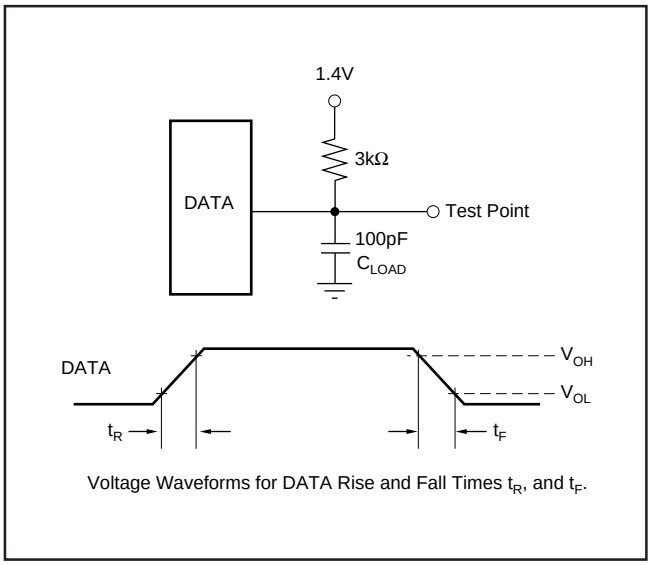


FIGURE 6. Test Circuits for Timing Specifications.

| DESCRIPTION | ANALOG INPUT | DIGITAL OUTPUT BINARY TWO'S COMPLEMENT | |
|---|---|---|---|
| Full-Scale Input Span | $-V_{REF}$ to $+V_{REF}$ (1) | | |
| Least Significant Bit (LSB) | ($-V_{REF}$ to $+V_{REF}$)/4096 (2) | BINARY CODE | HEX CODE |
| +Full Scale | 4.99878V | 0111 1111 1111 | 7FF |
| Midscale | 2.5V | 0000 0000 0000 | 000 |
| Midscale – 1 LSB | 2.49878V | 1111 1111 1111 | FFF |
| –Full Scale | 0V | 1000 0000 0000 | 800 |

NOTES: (1) $-V_{REF}$ to $+V_{REF}$ around $V_{REF}$. With a 2.5V reference, this corresponds to a 0V to 5V input span. (2) 1.22mV with a 2.5V reference.

TABLE I. Ideal Input Voltages and Output Codes.

## TIMING AND CONTROL

The operation of the ADS7861 can be configured in four different modes by using the address pins M0, M1 and A0.

The M0 pin selects between two- and four-channel operation (in two-channel operation, the A0 pin selects between Channels 0 and 1; in four-channel operation the A0 pin is ignored and the channels are switched automatically after each conversion). The M1 pin selects between having serial data transmitted simultaneously on both the Serial A data output and the Serial B data output or having both channels output data through the Serial A port. The A0 pin selects either Channel 0 or Channel 1 (see Pin Descriptions and Serial Output Truth Table for more information).

The next four sections will explain the four different modes of operation.

### Mode I (M0 = 0, M1 = 0)

With the M0 and M1 pins both set to '0', the ADS7861 will operate in two-channel operation (the A0 pin must be used to switch between Channels A and B). A conversion is initiated by bringing CONVST HIGH for a minimum of 15ns. It is very important that CONVST be brought HIGH a minimum of 10ns prior to a rising edge of the external clock or 5ns after the rising edge. If CONVST is brought

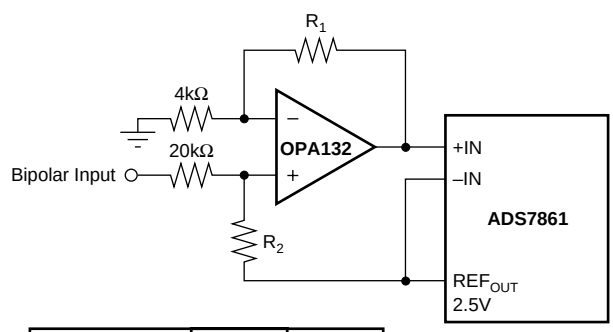


| BIPOLAR INPUT | $R_1$ | $R_2$ |
|---|---|---|
| ±10V | 1kΩ | 5kΩ |
| ±5V | 2kΩ | 10kΩ |
| ±2.5V | 4kΩ | 20kΩ |

FIGURE 7. Level Shift Circuit for Bipolar Input Ranges.

HIGH within this window, it is then uncertain as to when the ADS7861 will initiate conversion (see Figure 8 for a more detailed description). Sixteen clock cycles are required to perform a single conversion. Immediately following CONVST switching to HIGH, the ADS7861 will switch from the sample mode to the hold mode asynchronous to the external clock. The BUSY output pin will then go HIGH and remain HIGH for the duration of the conversion cycle. On the falling edge of the first cycle of the external clock, the ADS7861 will latch in the address for the next conversion cycle depending on the status of the A0 pin (HIGH = Channel 1, LOW = Channel 0). The address must be selected 15ns prior to the falling edge of cycle one of the external clock and must remain 'held' for 15ns following the clock edge. For maximum throughput time, the CONVST and RD pins should be tied together. CS must be brought LOW to enable the two serial outputs. Data will be valid on the falling edge of all 16 clock cycles per conversion. The first bit of data will be a status flag for either Channel 0 or 1, the second bit will be a second status flag for either Channel A or B. The subsequent data will be MSB-first through the LSB, followed by two zeros (see Table II and Figures 9 and 10).

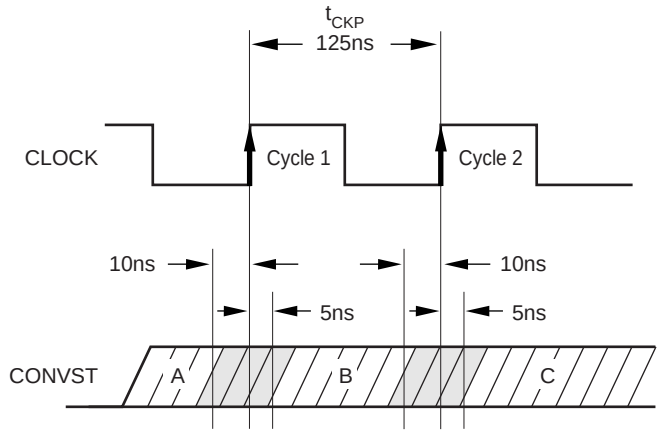


NOTE: All CONVST commands which occur more than 10ns before the rising edge of cycle '1' of the external clock (Region 'A') will initiate a conversion on the rising edge of cycle '1'. All CONVST commands which occur 5ns after the rising edge of cycle '1' or 10ns before the rising edge of cycle 2 (Region 'B') will initiate a conversion on the rising edge of cycle '2'. All CONVST commands which occur 5ns after the rising edge of cycle '2' (Region 'C') will initiate a conversion on the rising edge of the next clock period. The CONVST pin should never be switched from LOW to HIGH in the region 10ns prior to the rising edge of the CLOCK and 5ns after the rising edge (gray areas). If CONVST is toggled in this gray area, the conversion could begin on either the same rising edge of the CLOCK or the following edge.

FIGURE 8. Conversion Mode.

## TIMING SPECIFICATIONS

| SYMBOL | DESCRIPTION | MIN | TYP | MAX | UNITS | COMMENTS |
|---|---|---|---|---|---|---|
| $t_{CONV}$ | Conversion Time | 1.75 | | | µs | When $T_{CKP}$ = 125ns |
| $t_{ACQ}$ | Acquisition Time | 0.25 | | | µs | When $T_{CKP}$ = 125ns |
| $t_{CKP}$ | Clock Period | 125 | | 5000 | ns | |
| $t_{CKL}$ | Clock LOW | 40 | | | ns | |
| $t_{CKH}$ | Clock HIGH | 40 | | | ns | |
| $t_F$ | DOUT Fall Time | | | 25 | ns | |
| $t_R$ | DOUT Rise Time | | | 30 | ns | |
| $t_1$ | CONVST HIGH | 15 | | | ns | |
| $t_2$ | Address Setup Time | 15 | | | ns | Address latched on falling edge of CLK cycle '2' |
| $t_3$ | Address Hold Time | 15 | | | | |
| $t_4$ | RD Setup Time | 15 | | | ns | Before falling edge of CLOCK |
| $t_5$ | RD to $\overline{CS}$ Hold Time | 15 | | | ns | After falling edge of CLOCK |
| $t_6$ | CONVST LOW | 20 | | | ns | |
| $t_7$ | $\overline{RD}$ LOW | 20 | | | ns | |
| $t_8$ | $\overline{CS}$ to Data Valid | | | 25 | ns | |
| $t_9$ | CLOCK to Data Valid Delay | | | 30 | ns | Maximum delay following rising edge of CLOCK |
| $t_{10}$ | Data Valid After CLOCK(1) | | | 1 | ns | Time data is valid after second rising edge of CLOCK |

NOTE: (1) 'n – 1' data will remain valid 1ns after rising edge of next CLOCK cycle.

| CLOCK CYCLE | 1 | 2 | 3 | 4 | 5 | 6 | 7 | 8 | 9 | 10 | 11 | 12 | 13 | 14 | 15 | 16 |
|---|---|---|---|---|---|---|---|---|---|---|---|---|---|---|---|---|
| SERIAL DATA | CH0 OR CH1 | CHA OR CHB | DB11 | DB10 | DB9 | DB8 | DB7 | DB6 | DB5 | DB4 | DB3 | DB2 | DB1 | DB0 | 0 | 0 |

TABLE II. Serial Data Output Format.

### Mode II (M0 = 0, M1 = 1)

With M1 set to '1', the ADS7861 will output data on the Serial Data A pin only. All other pins function in the same manner as Mode I except that the Serial Data B output will tri-state (i.e., high impedance) after a conversion following M1 going HIGH. Another difference in this mode involves the CONVST pin. Since it takes 32 clock cycles to output the results from both A/D converters (rather than 16 when M1 = 0), the ADS7861 will take 4µs to complete a conversion on both A/Ds (See Figure 11).

### Mode III (M0 = 1, M1 = 0)

With M0 set to '1', the ADS7861 will cycle through Channels 0 and 1 sequentially (the A0 pin is ignored). At the same time, setting M1 to '0' places both Serial Outputs, A and B, in the active mode (See Figure 12).

### Mode IV (M0 = 1, M1 = 1)

Similar to Mode II, Mode IV uses the Serial A output line to transmit data exclusively. Following the first conversion after M1 goes HIGH, the serial B output will go into tri-state. See Figure 13. As in Mode II, the second CONVST command is always ignored when M1 = 1.

### READING DATA

In all four timing diagrams, the CONVST pin and the RD pins are tied together. If so desired, the two lines can be separated. Data on the Serial Output pins (A and B) will become valid following the third rising SCLK edge following RD rising edge. Refer to Table II for data output format.

## LAYOUT

For optimum performance, care should be taken with the physical layout of the ADS7861 circuitry. This is particularly true if the CLOCK input is approaching the maximum throughput rate.

The basic SAR architecture is sensitive to glitches or sudden changes on the power supply, reference, ground connections and digital inputs that occur just prior to latching the output of the analog comparator. Thus, driving any single conversion for an n-bit SAR converter, there are n "windows" in which large external transient voltages can affect the conversion result. Such glitches might originate from switching power supplies, nearby digital logic or high power devices. The degree of error in the digital output depends on the reference voltage, layout, and the exact timing of the external event. Their error can change if the external event changes in time with respect to the CLOCK input.

With this in mind, power to the ADS7861 should be clean and well-bypassed. A 0.1µF ceramic bypass capacitor should be placed as close to the device as possible. In addition, a 1µF to 10µF capacitor is recommended. If needed, an even larger capacitor and a 5Ω or 10Ω series resistor may be used to low pass filter a noisy supply. On average, the ADS7861 draws very little current from an external reference as the reference voltage is internally buffered. However, glitches from the conversion process appear at the $V_{REF}$ input and the reference source must be able to handle this. Whether the reference is internal or external, the $V_{REF}$ pin should be bypassed with a 0.1µF capacitor. An additional larger capacitor may also be used, if desired. If the reference voltage is external and originates from an op amp, make sure that it can drive the bypass capacitor or capacitors without oscillation. No bypass capacitor is necessary when using the internal reference (tie pin 10 directly to pin 11).

The GND pin should be connected to a clean ground point. In many cases, this will be the 'analog' ground. Avoid connections which are too near the grounding point of a microcontroller or digital signal processor. If required, run a ground trace directly from the converter to the power supply entry point. The ideal layout will include an analog ground plane dedicated to the converter and associated analog circuitry.

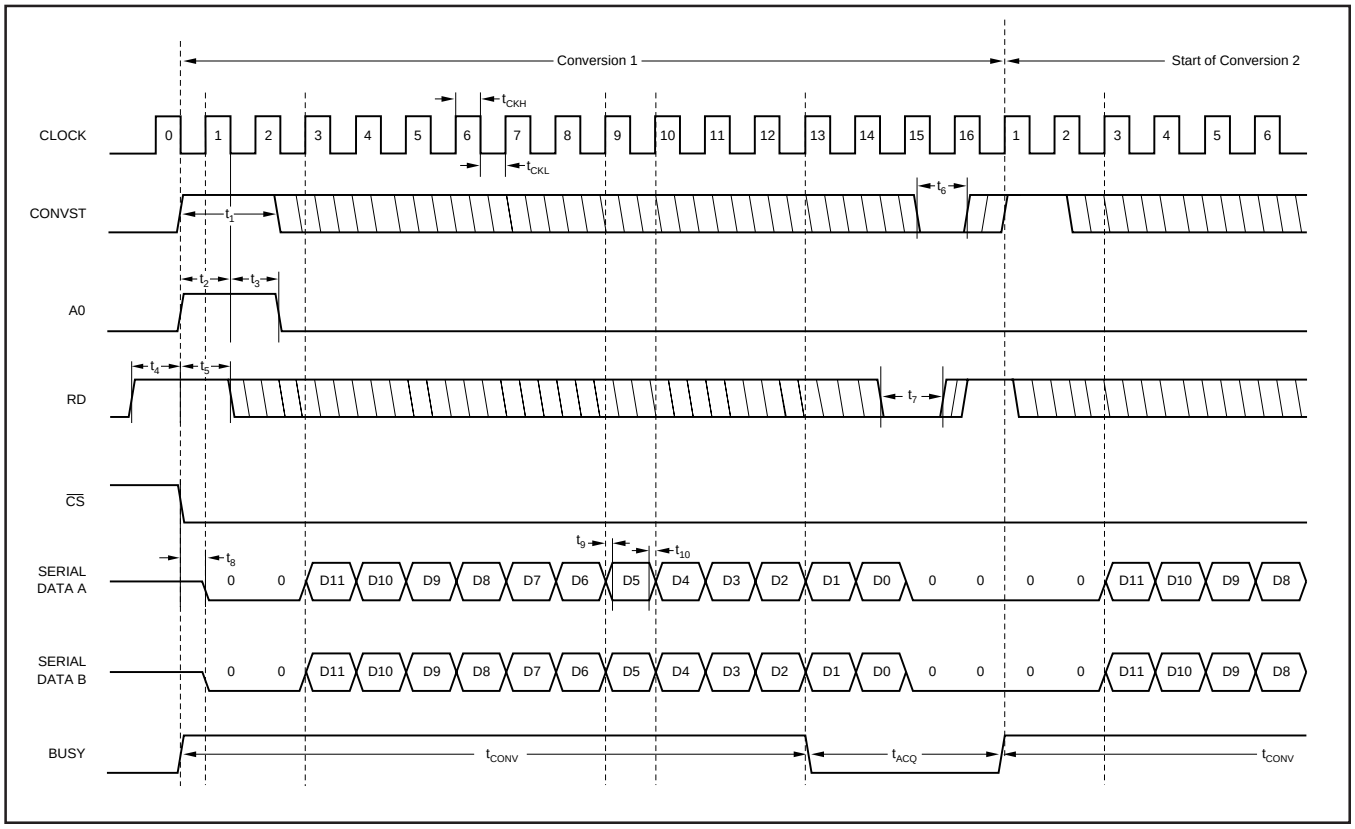


FIGURE 9. Mode I with Timing Specifications.

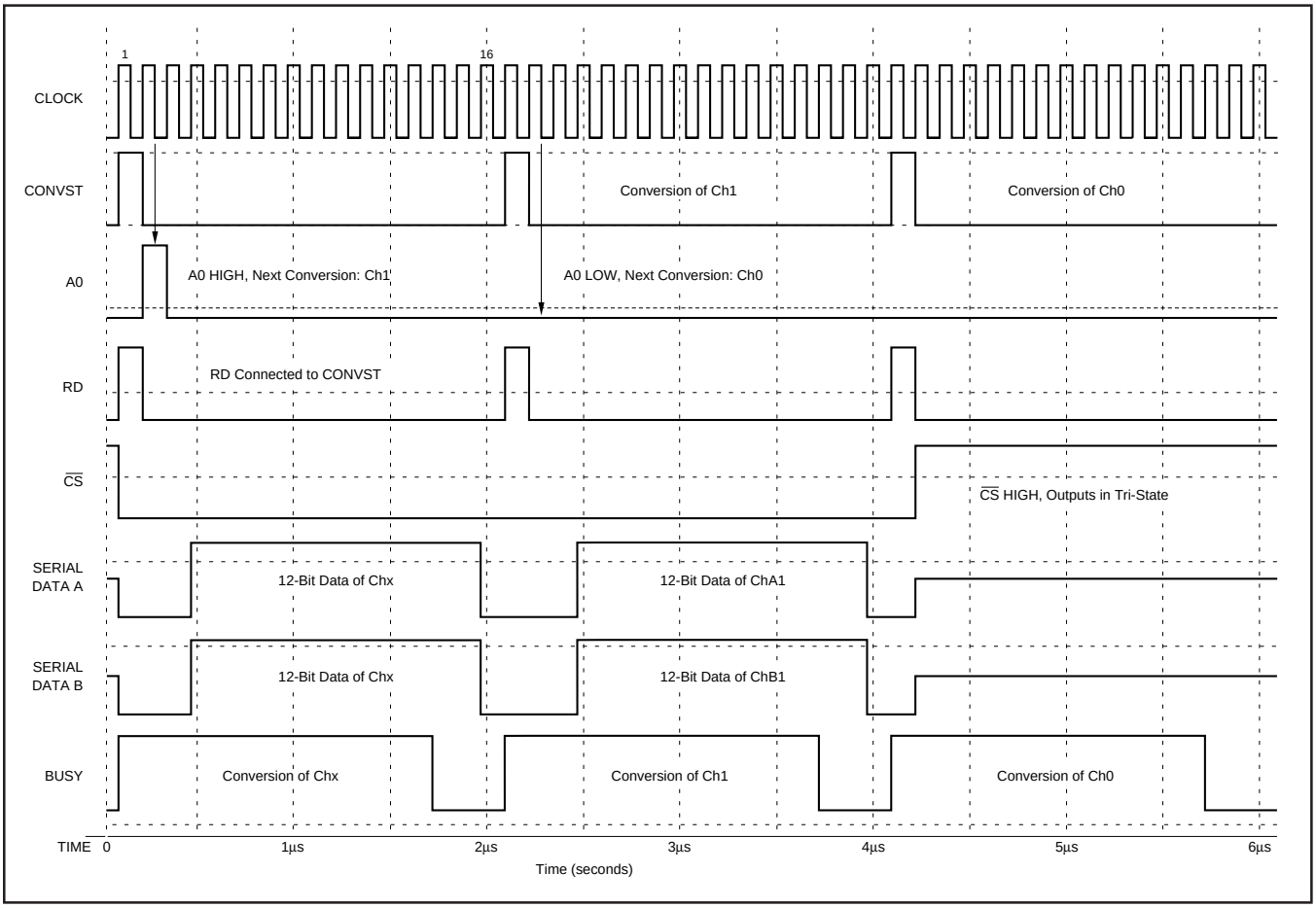


FIGURE 10. Mode I, Timing Diagram for M0 = 0 and M1 = 0.

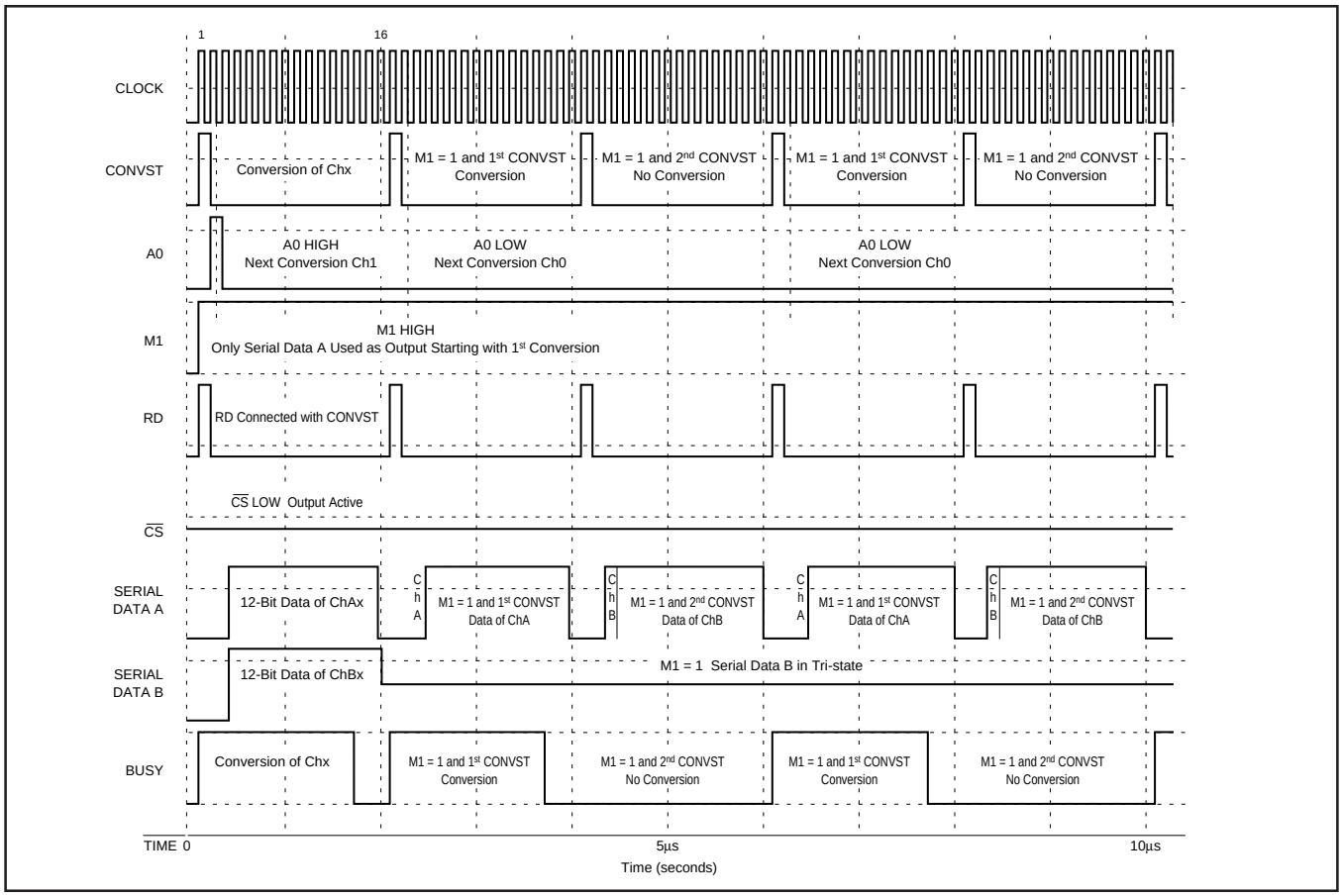


FIGURE 11. Mode II, Timing Diagram for M0 = 0 and M1 = 1.

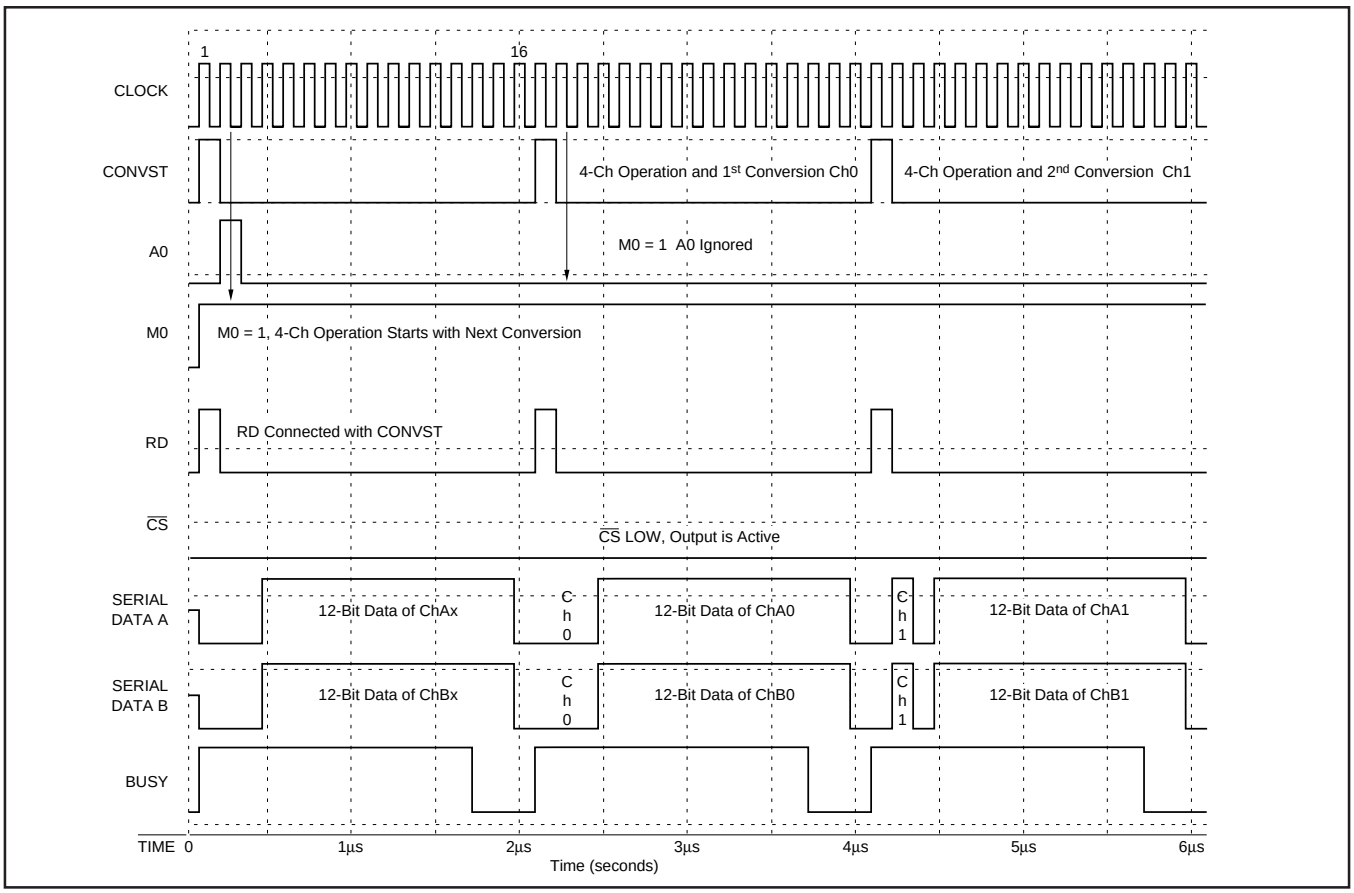


FIGURE 12. Mode III, Timing Diagram for M0 = 1 and M1 = 0.

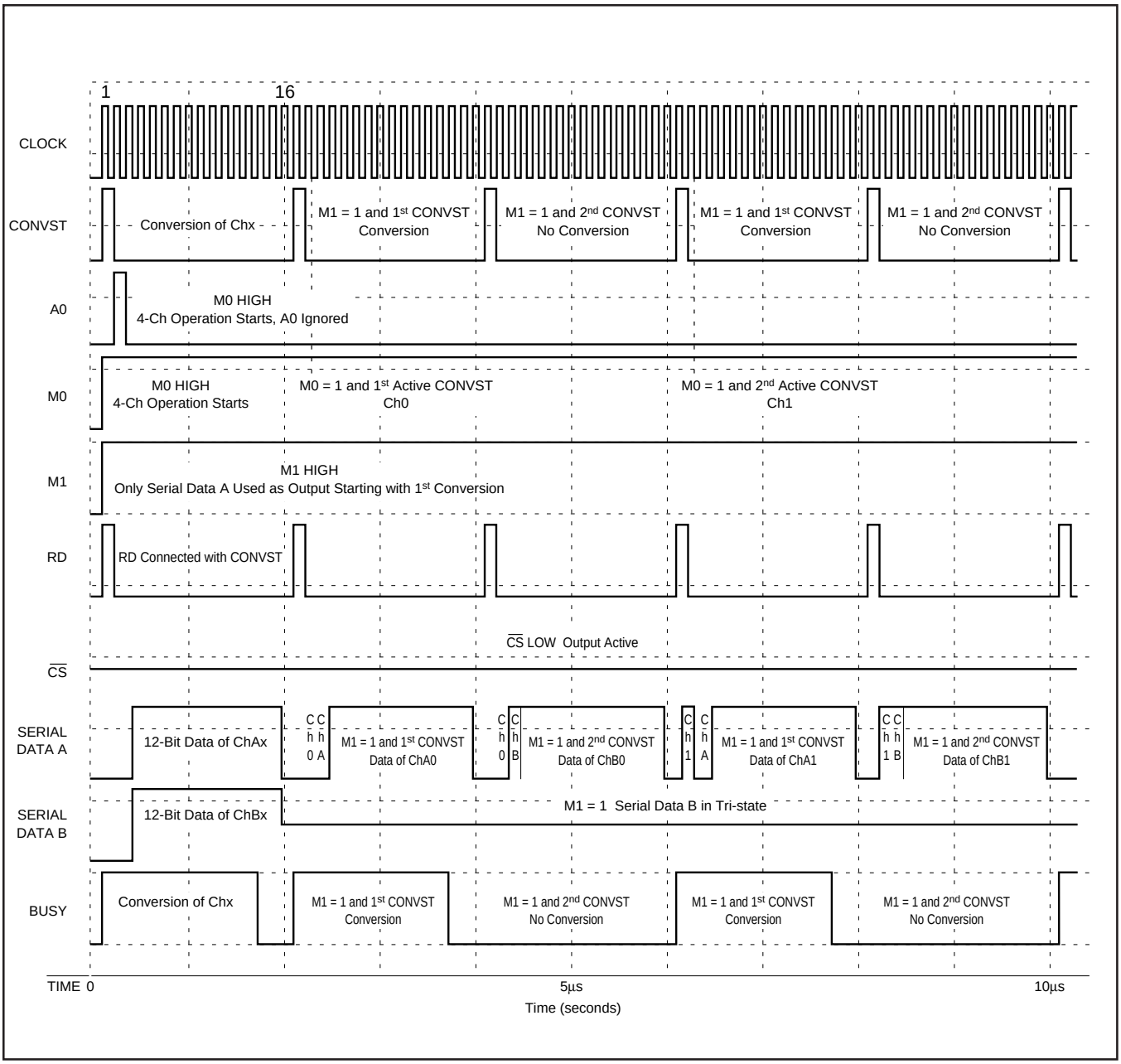


FIGURE 13. Mode IV, Timing Diagram for M0 = 1 and M1 = 1.

## Revision History

| DATE | REVISION | PAGE | SECTION | DESCRIPTION |
|---|---|---|---|---|
| 8/07 | D | 6 | Pin Configuration | Added Note (1) to QFN package. |
| 8/06 | C | 1 | Entire Document | Changed Throughput Rate from 500kHz to 500kSPS throughout document. |
| | | 1 | Features | Added Operating Temperature Range: –40°C to +125°C. |
| | | 1 | Description | Changed Operating Temperature Range upper limit from +85°C to +125°C. |
| | | 2 | Absolute Maximum Ratings | Changed Operating Temperature Range upper limit from +85°C to +125°C. |
| | | 3 | Electrical Characteristics | Changed top-of-page header condition to begin with: "Over recommended operating free-air temperature range at..." |
| | | | | Changed "$T_{MIN}$ to $T_{MAX}$" to "$T_A$ = –40°C to +125°C" in several locations. |
| | | | | Added $T_A$ = –40°C to +85°C to conditions for these parameters: Bipolar Offset Error, Total Harmonic Distortion, Spurious-Free Dynamic Range, Quiescent Current, and Power Dissipation. |
| | | | | Added new row for $T_A$ = –40°C to +125°C condition for these parameters: Bipolar Offset Error, Total Harmonic Distortion, Spuriouse-Free Dynamic Range, Quiescent Current, and Power Dissipation. |
| | | | | Moved "$V_{IN}$ = ±2.5$V_{PP}$ at 100kHz" from conditions of Dynamic Characteristics to section header. |

NOTE: Page numbers for previous revisions may differ from page numbers in the current version.

## PACKAGING INFORMATION

| Orderable Device | Status [1] | Package Type | Package Drawing | Pins | Package Qty | Eco Plan [2] | Lead/Ball Finish | MSL Peak Temp [3] |
|---|---|---|---|---|---|---|---|---|
| ADS7861E | ACTIVE | SSOP/ QSOP | DBQ | 24 | 56 | Green (RoHS & no Sb/Br) | CU NIPDAU | Level-2-260C-1 YEAR |
| ADS7861E/2K5 | ACTIVE | SSOP/ QSOP | DBQ | 24 | 2500 | Green (RoHS & no Sb/Br) | CU NIPDAU | Level-2-260C-1 YEAR |
| ADS7861E/2K5G4 | ACTIVE | SSOP/ QSOP | DBQ | 24 | 2500 | Green (RoHS & no Sb/Br) | CU NIPDAU | Level-2-260C-1 YEAR |
| ADS7861EB | ACTIVE | SSOP/ QSOP | DBQ | 24 | 56 | Green (RoHS & no Sb/Br) | CU NIPDAU | Level-2-260C-1 YEAR |
| ADS7861EB/2K5 | ACTIVE | SSOP/ QSOP | DBQ | 24 | 2500 | Green (RoHS & no Sb/Br) | CU NIPDAU | Level-2-260C-1 YEAR |
| ADS7861EB/2K5G4 | ACTIVE | SSOP/ QSOP | DBQ | 24 | 2500 | Green (RoHS & no Sb/Br) | CU NIPDAU | Level-2-260C-1 YEAR |
| ADS7861EBG4 | ACTIVE | SSOP/ QSOP | DBQ | 24 | 56 | Green (RoHS & no Sb/Br) | CU NIPDAU | Level-2-260C-1 YEAR |
| ADS7861EG4 | ACTIVE | SSOP/ QSOP | DBQ | 24 | 56 | Green (RoHS & no Sb/Br) | CU NIPDAU | Level-2-260C-1 YEAR |
| ADS7861IBRHBR | ACTIVE | QFN | RHB | 32 | 3000 | Green (RoHS & no Sb/Br) | CU NIPDAU | Level-2-260C-1 YEAR |
| ADS7861IBRHBRG4 | ACTIVE | QFN | RHB | 32 | 3000 | Green (RoHS & no Sb/Br) | CU NIPDAU | Level-2-260C-1 YEAR |
| ADS7861IBRHBT | ACTIVE | QFN | RHB | 32 | 250 | Green (RoHS & no Sb/Br) | CU NIPDAU | Level-2-260C-1 YEAR |
| ADS7861IBRHBTG4 | ACTIVE | QFN | RHB | 32 | 250 | Green (RoHS & no Sb/Br) | CU NIPDAU | Level-2-260C-1 YEAR |
| ADS7861IRHBR | ACTIVE | QFN | RHB | 32 | 3000 | Green (RoHS & no Sb/Br) | CU NIPDAU | Level-2-260C-1 YEAR |
| ADS7861IRHBRG4 | ACTIVE | QFN | RHB | 32 | 3000 | Green (RoHS & no Sb/Br) | CU NIPDAU | Level-2-260C-1 YEAR |
| ADS7861IRHBT | ACTIVE | QFN | RHB | 32 | 250 | Green (RoHS & no Sb/Br) | CU NIPDAU | Level-2-260C-1 YEAR |
| ADS7861IRHBTG4 | ACTIVE | QFN | RHB | 32 | 250 | Green (RoHS & no Sb/Br) | CU NIPDAU | Level-2-260C-1 YEAR |

[1] The marketing status values are defined as follows:
**ACTIVE:** Product device recommended for new designs.
**LIFEBUY:** TI has announced that the device will be discontinued, and a lifetime-buy period is in effect.
**NRND:** Not recommended for new designs. Device is in production to support existing customers, but TI does not recommend using this part in a new design.
**PREVIEW:** Device has been announced but is not in production. Samples may or may not be available.
**OBSOLETE:** TI has discontinued the production of the device.

[2] Eco Plan - The planned eco-friendly classification: Pb-Free (RoHS), Pb-Free (RoHS Exempt), or Green (RoHS & no Sb/Br) - please check http://www.ti.com/productcontent for the latest availability information and additional product content details.
**TBD:** The Pb-Free/Green conversion plan has not been defined.
**Pb-Free (RoHS):** TI's terms "Lead-Free" or "Pb-Free" mean semiconductor products that are compatible with the current RoHS requirements for all 6 substances, including the requirement that lead not exceed 0.1% by weight in homogeneous materials. Where designed to be soldered at high temperatures, TI Pb-Free products are suitable for use in specified lead-free processes.
**Pb-Free (RoHS Exempt):** This component has a RoHS exemption for either 1) lead-based flip-chip solder bumps used between the die and package, or 2) lead-based die adhesive used between the die and leadframe. The component is otherwise considered Pb-Free (RoHS compatible) as defined above.
**Green (RoHS & no Sb/Br):** TI defines "Green" to mean Pb-Free (RoHS compatible), and free of Bromine (Br) and Antimony (Sb) based flame retardants (Br or Sb do not exceed 0.1% by weight in homogeneous material)

(3) MSL, Peak Temp. -- The Moisture Sensitivity Level rating according to the JEDEC industry standard classifications, and peak solder temperature.

**Important Information and Disclaimer:**The information provided on this page represents TI's knowledge and belief as of the date that it is provided. TI bases its knowledge and belief on information provided by third parties, and makes no representation or warranty as to the accuracy of such information. Efforts are underway to better integrate information from third parties. TI has taken and continues to take reasonable steps to provide representative and accurate information but may not have conducted destructive testing or chemical analysis on incoming materials and chemicals. TI and TI suppliers consider certain information to be proprietary, and thus CAS numbers and other limited information may not be available for release.

In no event shall TI's liability arising out of such information exceed the total purchase price of the TI part(s) at issue in this document sold by TI to Customer on an annual basis.

## DBQ (R–PDSO–G24) PLASTIC SMALL–OUTLINE PACKAGE

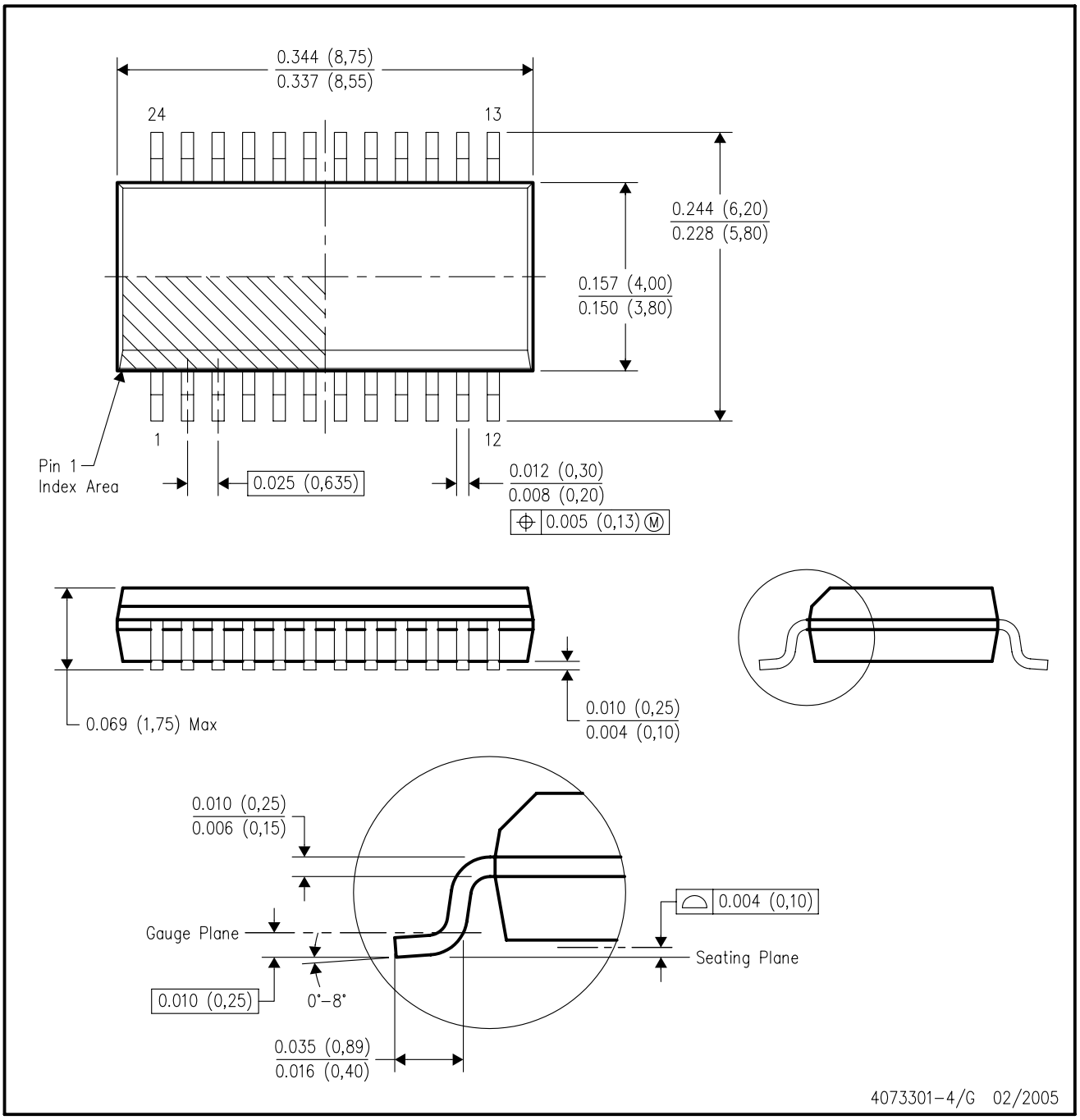


NOTES:
A. All linear dimensions are in inches (millimeters).
B. This drawing is subject to change without notice.
C. Body dimensions do not include mold flash or protrusion not to exceed 0.006 (0,15) per side.
D. Falls within JEDEC MO–137 variation AE.

## RHB (S–PQFP–N32) PLASTIC QUAD FLATPACK

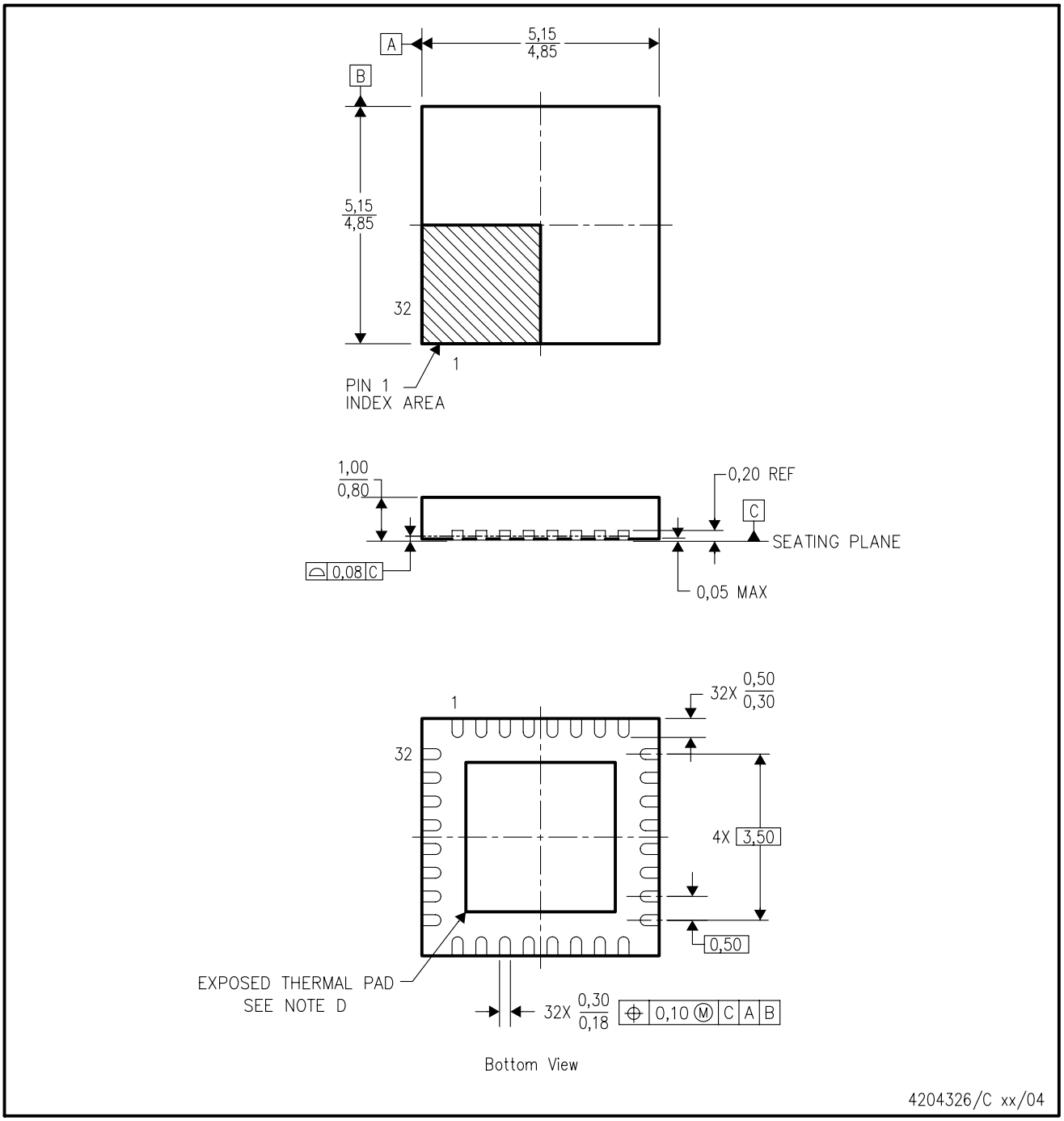


NOTES:
A. All linear dimensions are in millimeters.
B. This drawing is subject to change without notice.
C. QFN (Quad Flatpack No–Lead) Package configuration.
D The Package thermal pad must be soldered to the board for thermal and mechanical performance. See product data sheet for details regarding the exposed thermal pad dimensions.
E. Falls within JEDEC MO–220.

THERMAL INFORMATION

**This package incorporates an exposed thermal pad that is designed to be attached directly to an external heatsink. The thermal pad must be soldered directly to the printed circuit board (PCB). After soldering, the PCB can be used as a heatsink. In addition, through the use of thermal vias, the thermal pad can be attached directly to the appropriate copper plane shown in the electrical schematic for the device, or alternatively, can be attached to a special heatsink structure designed into the PCB. This design optimizes the heat transfer from the integrated circuit (IC).**

For information on the Quad Flatpack No–Lead (QFN) package and its advantages, refer to Application Report, Quad Flatpack No–Lead Logic Packages, Texas Instruments Literature No. SCBA017. This document is available at www.ti.com.

The exposed thermal pad dimensions for this package are shown in the following illustration.

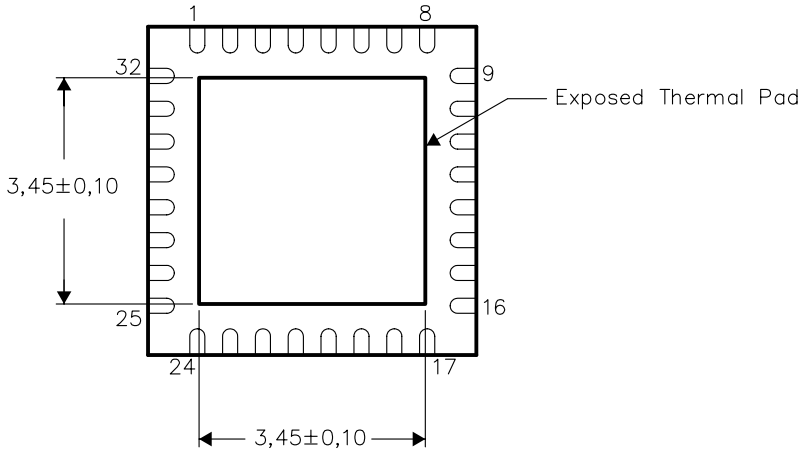


Bottom View

NOTE: All linear dimensions are in millimeters

Exposed Thermal Pad Dimensions

# RHB (S–PQFP–N32)

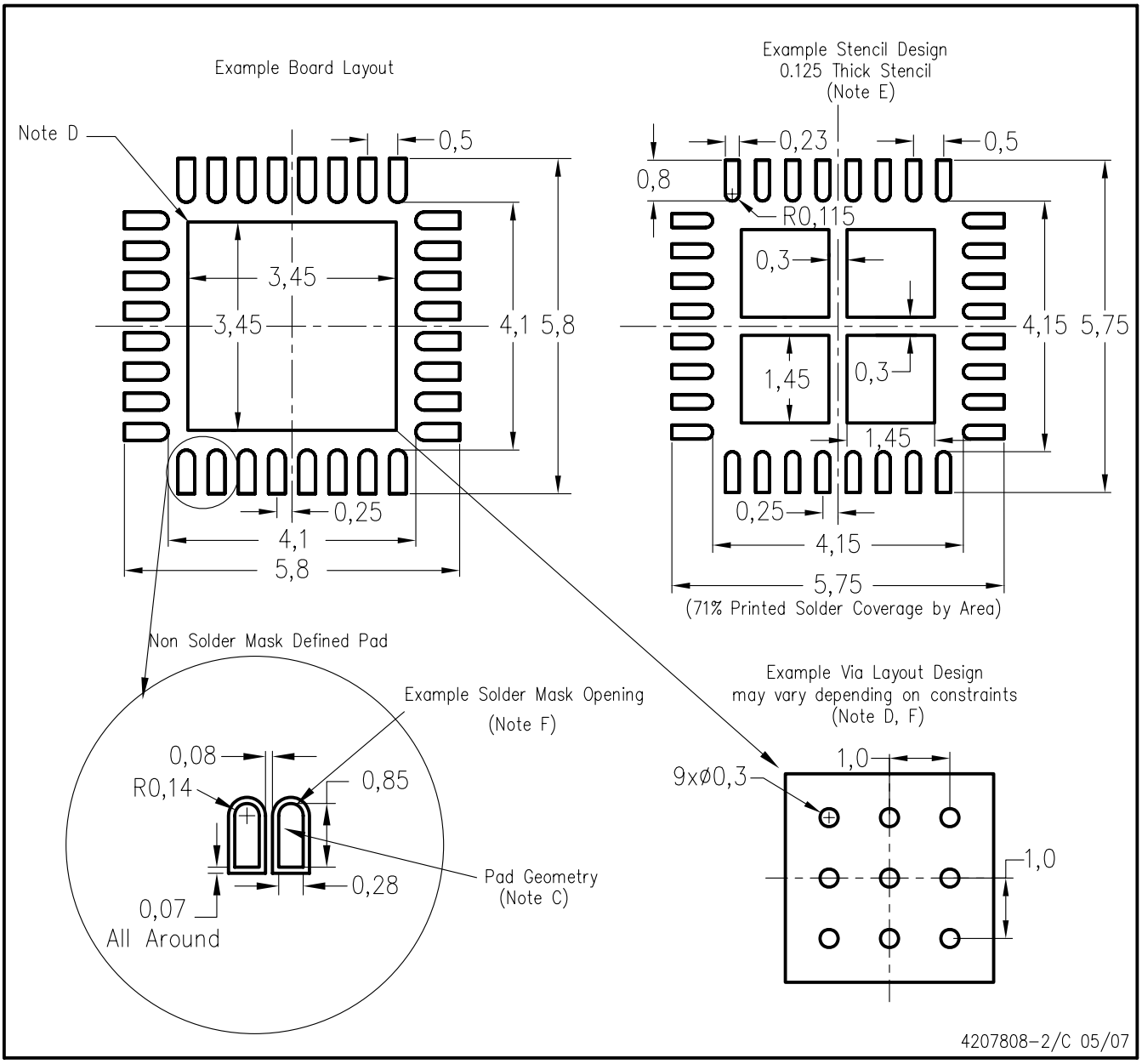


NOTES:
- A. All linear dimensions are in millimeters.
- B. This drawing is subject to change without notice.
- C. Publication IPC–7351 is recommended for alternate designs.
- D. This package is designed to be soldered to a thermal pad on the board. Refer to Application Note, Quad Flat–Pack Packages, Texas Instruments Literature No. SCBA017, SLUA271, and also the Product Data Sheets for specific thermal information, via requirements, and recommended board layout. These documents are available at www.ti.com <http://www.ti.com>.
- E. Laser cutting apertures with trapezoidal walls and also rounding corners will offer better paste release. Customers should contact their board assembly site for stencil design recommendations. Refer to IPC 7525 for stencil design considerations.
- F. Customers should contact their board fabrication site for recommended solder mask tolerances and via tenting recommendations for vias placed in the thermal pad.

## PACKAGING INFORMATION

| Orderable part number | Status (1) | Material type (2) | Package \| Pins | Package qty \| Carrier | RoHS (3) | Lead finish/ Ball material (4) | MSL rating/ Peak reflow (5) | Op temp (°C) | Part marking (6) |
|---|---|---|---|---|---|---|---|---|---|
| ADS7861E | Active | Production | SSOP (DBQ) \| 24 | 50 \| TUBE | Yes | Call TI | Level-2-260C-1 YEAR | -40 to 125 | ADS7861E |
| ADS7861E.B | Active | Production | SSOP (DBQ) \| 24 | 50 \| TUBE | Yes | Call TI | Level-2-260C-1 YEAR | -40 to 125 | ADS7861E |
| ADS7861E/2K5 | Active | Production | SSOP (DBQ) \| 24 | 2500 \| LARGE T&R | Yes | Call TI | Level-2-260C-1 YEAR | - | ADS7861E |
| ADS7861E/2K5.B | Active | Production | SSOP (DBQ) \| 24 | 2500 \| LARGE T&R | Yes | Call TI | Level-2-260C-1 YEAR | -40 to 125 | ADS7861E |
| ADS7861EB | Active | Production | SSOP (DBQ) \| 24 | 50 \| TUBE | Yes | Call TI | Level-2-260C-1 YEAR | - | ADS7861E |
| ADS7861EB.B | Active | Production | SSOP (DBQ) \| 24 | 50 \| TUBE | Yes | Call TI | Level-2-260C-1 YEAR | -40 to 125 | ADS7861E |
| ADS7861EB/2K5 | Active | Production | SSOP (DBQ) \| 24 | 2500 \| LARGE T&R | Yes | Call TI | Level-2-260C-1 YEAR | - | ADS7861E |
| ADS7861EB/2K5.B | Active | Production | SSOP (DBQ) \| 24 | 2500 \| LARGE T&R | Yes | Call TI | Level-2-260C-1 YEAR | -40 to 125 | ADS7861E |
| ADS7861EB/2K5G4 | Active | Production | SSOP (DBQ) \| 24 | 2500 \| LARGE T&R | Yes | Call TI | Level-2-260C-1 YEAR | See ADS7861EB/2K5 | ADS7861E |
| ADS7861IBRHBT | Active | Production | VQFN (RHB) \| 32 | 250 \| SMALL T&R | Yes | Call TI | Level-2-260C-1 YEAR | - | ADS 7861I B |
| ADS7861IBRHBT.B | Active | Production | VQFN (RHB) \| 32 | 250 \| SMALL T&R | Yes | Call TI | Level-2-260C-1 YEAR | -40 to 125 | ADS 7861I B |

(1) **Status:** For more details on status, see our product life cycle.

(2) **Material type:** When designated, preproduction parts are prototypes/experimental devices, and are not yet approved or released for full production. Testing and final process, including without limitation quality assurance, reliability performance testing, and/or process qualification, may not yet be complete, and this item is subject to further changes or possible discontinuation. If available for ordering, purchases will be subject to an additional waiver at checkout, and are intended for early internal evaluation purposes only. These items are sold without warranties of any kind.

(3) **RoHS values:** Yes, No, RoHS Exempt. See the TI RoHS Statement for additional information and value definition.

(4) **Lead finish/Ball material:** Parts may have multiple material finish options. Finish options are separated by a vertical ruled line. Lead finish/Ball material values may wrap to two lines if the finish value exceeds the maximum column width.

(5) **MSL rating/Peak reflow:** The moisture sensitivity level ratings and peak solder (reflow) temperatures. In the event that a part has multiple moisture sensitivity ratings, only the lowest level per JEDEC standards is shown. Refer to the shipping label for the actual reflow temperature that will be used to mount the part to the printed circuit board.

(6) **Part marking:** There may be an additional marking, which relates to the logo, the lot trace code information, or the environmental category of the part.

Multiple part markings will be inside parentheses. Only one part marking contained in parentheses and separated by a "~" will appear on a part. If a line is indented then it is a continuation of the previous line and the two combined represent the entire part marking for that device.

**Important Information and Disclaimer:**The information provided on this page represents TI's knowledge and belief as of the date that it is provided. TI bases its knowledge and belief on information provided by third parties, and makes no representation or warranty as to the accuracy of such information. Efforts are underway to better integrate information from third parties. TI has taken and continues to take reasonable steps to provide representative and accurate information but may not have conducted destructive testing or chemical analysis on incoming materials and chemicals. TI and TI suppliers consider certain information to be proprietary, and thus CAS numbers and other limited information may not be available for release.

In no event shall TI's liability arising out of such information exceed the total purchase price of the TI part(s) at issue in this document sold by TI to Customer on an annual basis.

## TAPE AND REEL INFORMATION

**REEL DIMENSIONS**

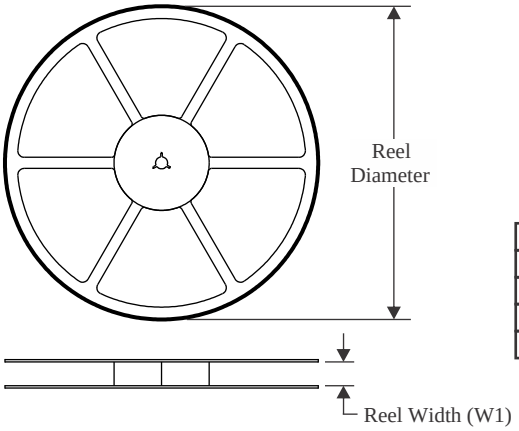


**TAPE DIMENSIONS**

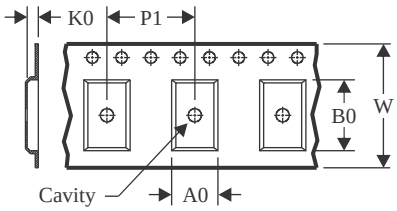


| | |
|---|---|
| A0 | Dimension designed to accommodate the component width |
| B0 | Dimension designed to accommodate the component length |
| K0 | Dimension designed to accommodate the component thickness |
| W | Overall width of the carrier tape |
| P1 | Pitch between successive cavity centers |

**QUADRANT ASSIGNMENTS FOR PIN 1 ORIENTATION IN TAPE**

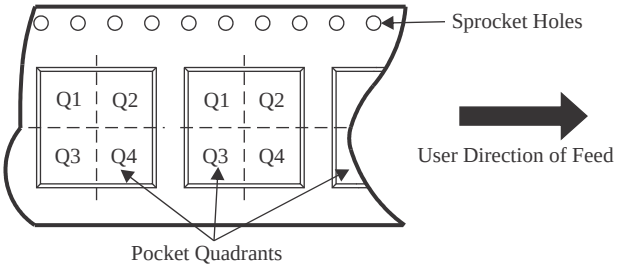


*All dimensions are nominal

| Device | Package Type | Package Drawing | Pins | SPQ | Reel Diameter (mm) | Reel Width W1 (mm) | A0 (mm) | B0 (mm) | K0 (mm) | P1 (mm) | W (mm) | Pin1 Quadrant |
|---|---|---|---|---|---|---|---|---|---|---|---|---|
| ADS7861E/2K5 | SSOP | DBQ | 24 | 2500 | 330.0 | 16.4 | 6.5 | 9.0 | 2.1 | 8.0 | 16.0 | Q1 |
| ADS7861EB/2K5 | SSOP | DBQ | 24 | 2500 | 330.0 | 16.4 | 6.5 | 9.0 | 2.1 | 8.0 | 16.0 | Q1 |
| ADS7861IBRHBT | VQFN | RHB | 32 | 250 | 180.0 | 12.4 | 5.3 | 5.3 | 1.5 | 8.0 | 12.0 | Q2 |

TAPE AND REEL BOX DIMENSIONS

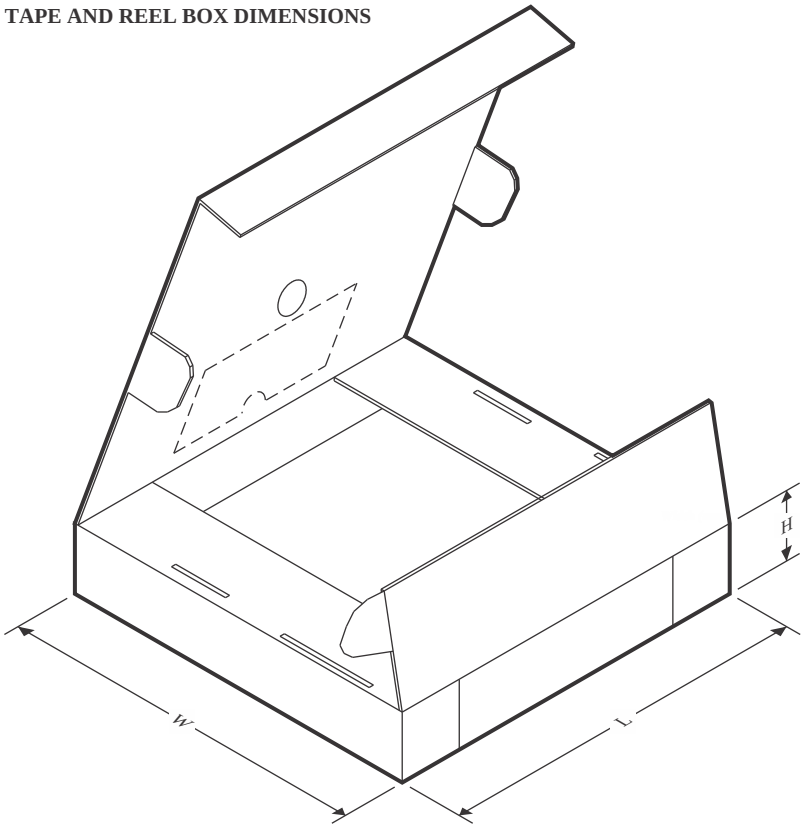


*All dimensions are nominal

| Device | Package Type | Package Drawing | Pins | SPQ | Length (mm) | Width (mm) | Height (mm) |
|---|---|---|---|---|---|---|---|
| ADS7861E/2K5 | SSOP | DBQ | 24 | 2500 | 356.0 | 356.0 | 35.0 |
| ADS7861EB/2K5 | SSOP | DBQ | 24 | 2500 | 356.0 | 356.0 | 35.0 |
| ADS7861IBRHBT | VQFN | RHB | 32 | 250 | 213.0 | 191.0 | 35.0 |

## TUBE

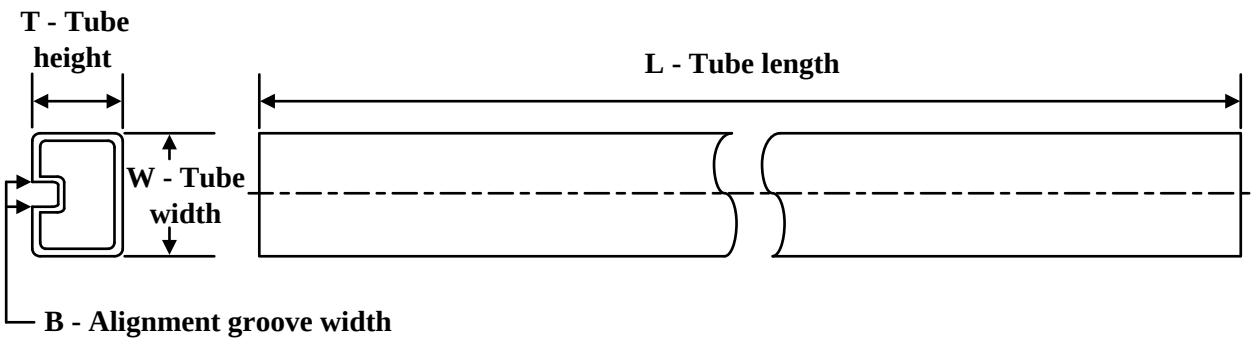


*All dimensions are nominal

| Device | Package Name | Package Type | Pins | SPQ | L (mm) | W (mm) | T (µm) | B (mm) |
|---|---|---|---|---|---|---|---|---|
| ADS7861E | DBQ | SSOP | 24 | 50 | 506.6 | 8 | 3940 | 4.32 |
| ADS7861E.B | DBQ | SSOP | 24 | 50 | 506.6 | 8 | 3940 | 4.32 |
| ADS7861EB | DBQ | SSOP | 24 | 50 | 506.6 | 8 | 3940 | 4.32 |
| ADS7861EB.B | DBQ | SSOP | 24 | 50 | 506.6 | 8 | 3940 | 4.32 |

# GENERIC PACKAGE VIEW

## RHB 32

## VQFN - 1 mm max height

**5 x 5, 0.5 mm pitch**

PLASTIC QUAD FLATPACK - NO LEAD

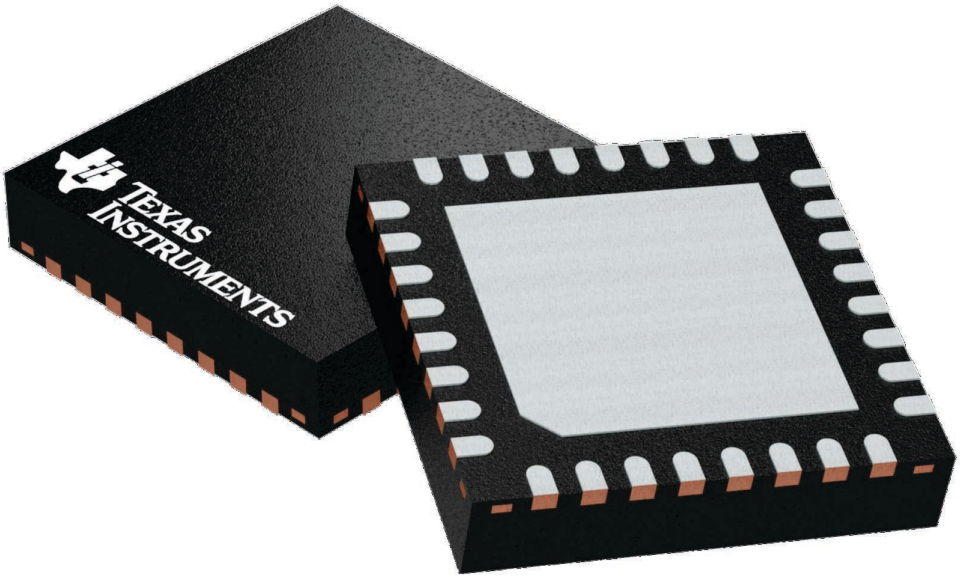


Images above are just a representation of the package family, actual package may vary.
Refer to the product data sheet for package details.

4224745/A

# RHB0032E

# PACKAGE OUTLINE

## VQFN - 1 mm max height

PLASTIC QUAD FLATPACK - NO LEAD

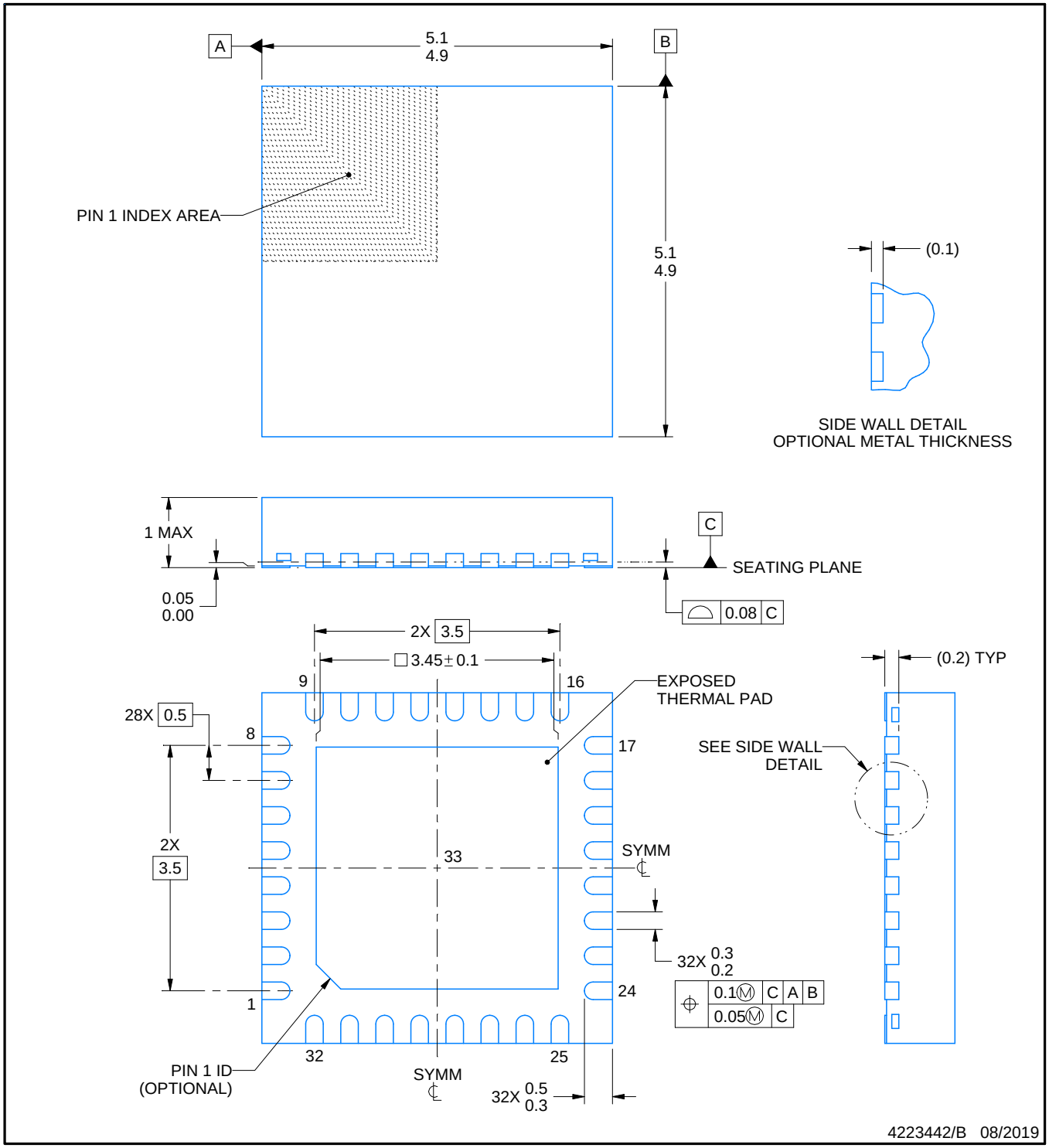


NOTES:

1. All linear dimensions are in millimeters. Any dimensions in parenthesis are for reference only. Dimensioning and tolerancing per ASME Y14.5M.
2. This drawing is subject to change without notice.
3. The package thermal pad must be soldered to the printed circuit board for thermal and mechanical performance.

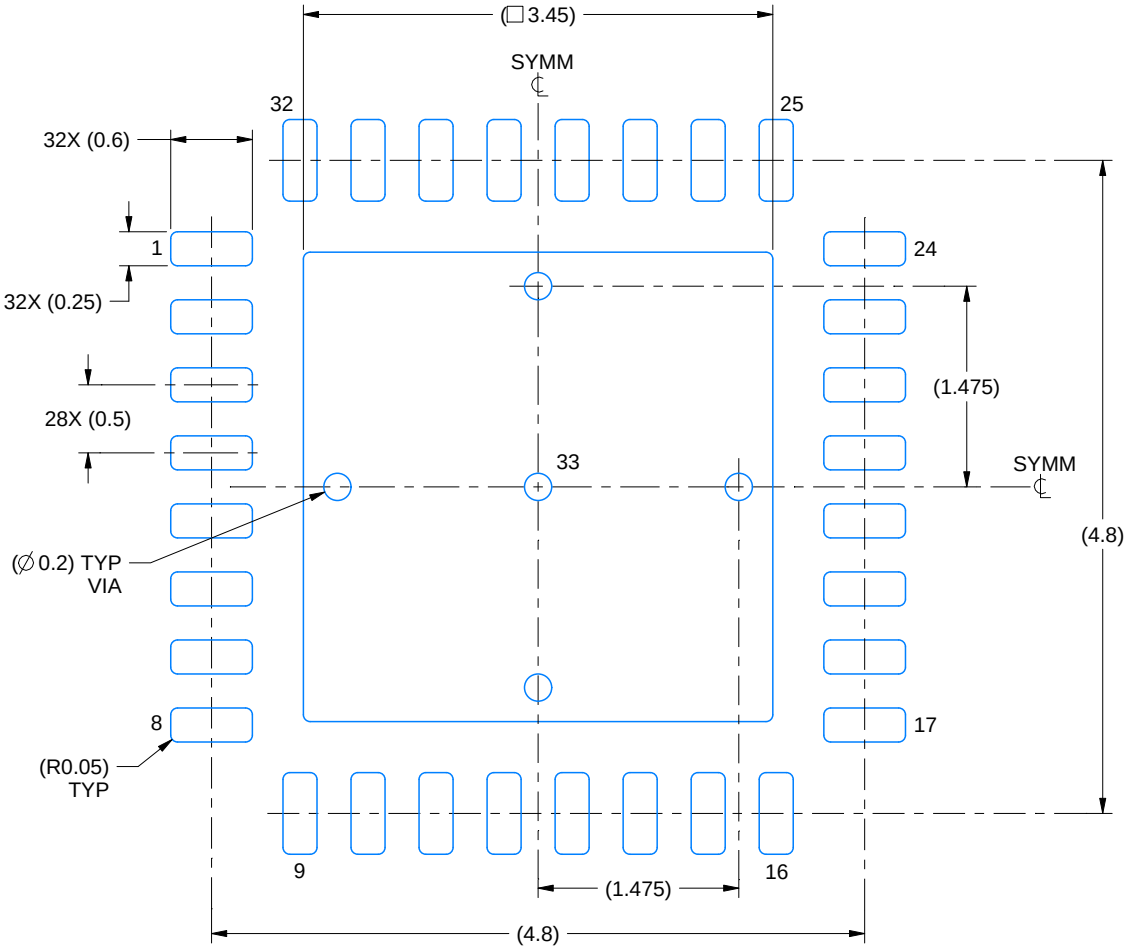


LAND PATTERN EXAMPLE
SCALE:18X

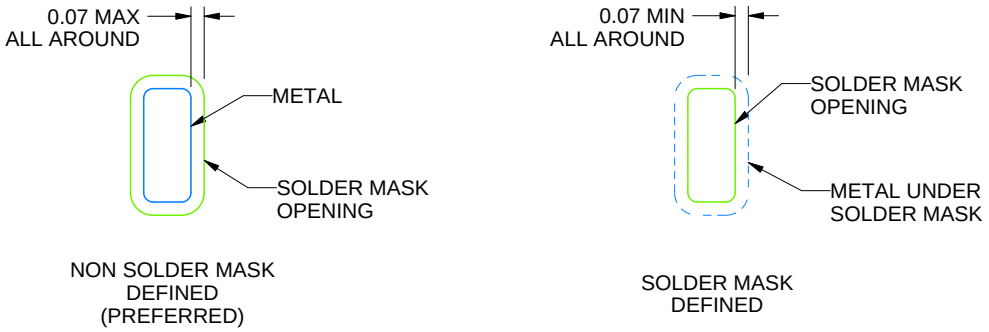


SOLDER MASK DETAILS

4223442/B 08/2019

NOTES: (continued)

4. This package is designed to be soldered to a thermal pad on the board. For more information, see Texas Instruments literature number SLUA271 (www.ti.com/lit/slua271).
5. Vias are optional depending on application, refer to device data sheet. If any vias are implemented, refer to their locations shown on this view. It is recommended that vias under paste be filled, plugged or tented.

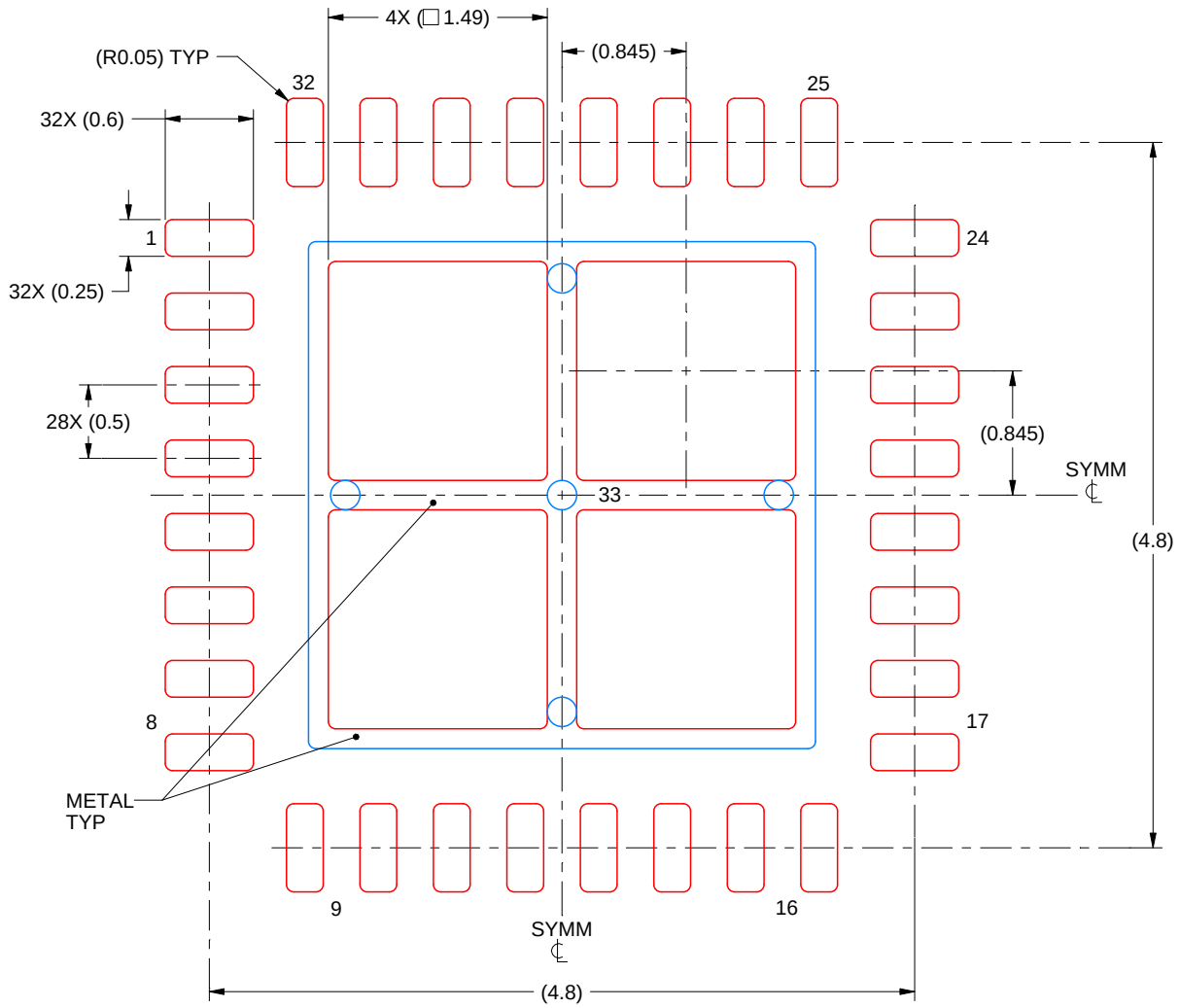


SOLDER PASTE EXAMPLE
BASED ON 0.125 mm THICK STENCIL

EXPOSED PAD 33:
75% PRINTED SOLDER COVERAGE BY AREA UNDER PACKAGE
SCALE:20X

4223442/B 08/2019

NOTES: (continued)

6. Laser cutting apertures with trapezoidal walls and rounded corners may offer better paste release. IPC-7525 may have alternate design recommendations.

DBQ (R–PDSO–G24) PLASTIC SMALL–OUTLINE PACKAGE

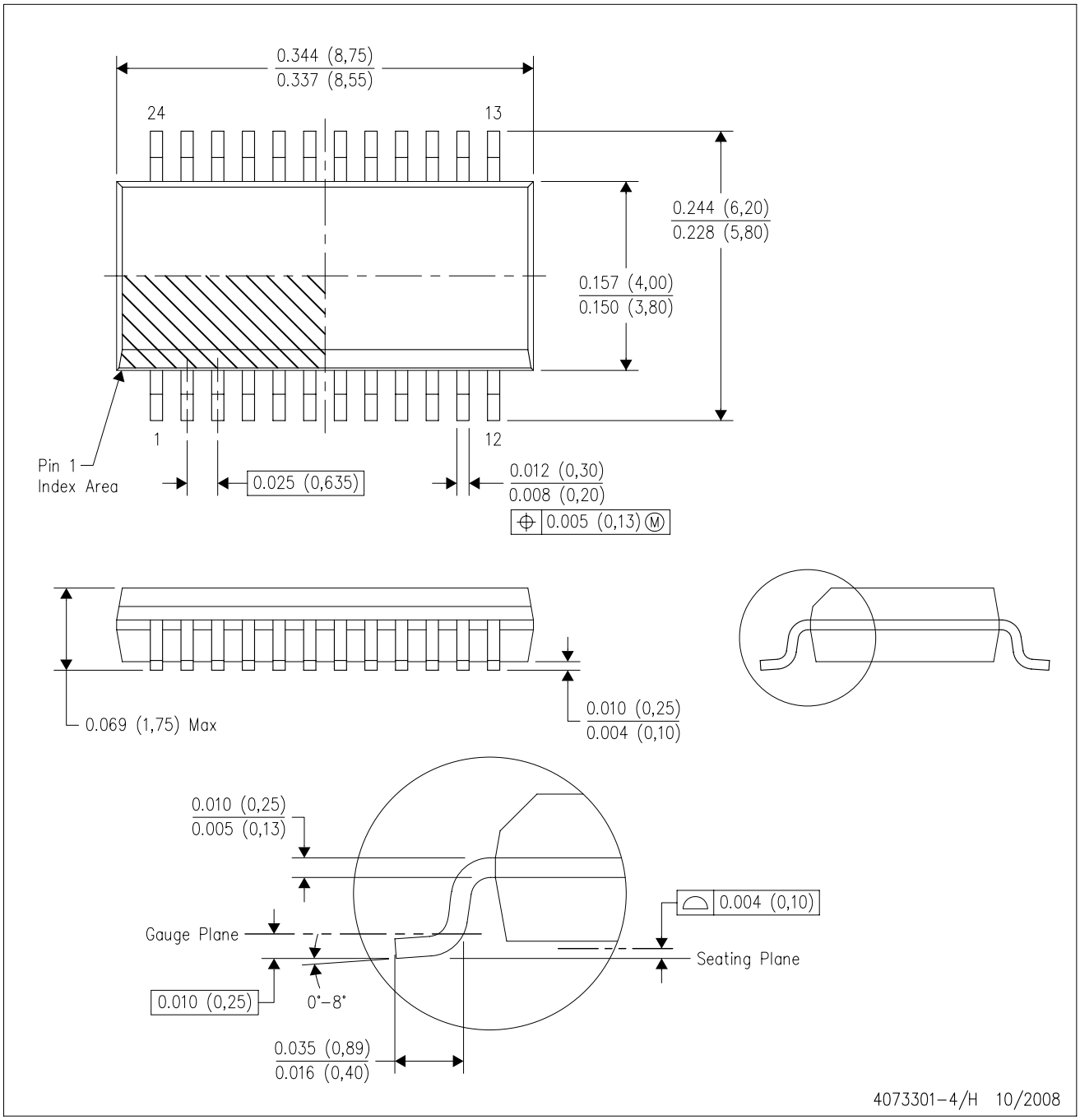


NOTES:
A. All linear dimensions are in inches (millimeters).
B. This drawing is subject to change without notice.
C. Body dimensions do not include mold flash or protrusion not to exceed 0.006 (0,15) per side.
D. Falls within JEDEC MO–137 variation AE.

# IMPORTANT NOTICE AND DISCLAIMER

TI PROVIDES TECHNICAL AND RELIABILITY DATA (INCLUDING DATA SHEETS), DESIGN RESOURCES (INCLUDING REFERENCE DESIGNS), APPLICATION OR OTHER DESIGN ADVICE, WEB TOOLS, SAFETY INFORMATION, AND OTHER RESOURCES “AS IS” AND WITH ALL FAULTS, AND DISCLAIMS ALL WARRANTIES, EXPRESS AND IMPLIED, INCLUDING WITHOUT LIMITATION ANY IMPLIED WARRANTIES OF MERCHANTABILITY, FITNESS FOR A PARTICULAR PURPOSE OR NON-INFRINGEMENT OF THIRD PARTY INTELLECTUAL PROPERTY RIGHTS.

These resources are intended for skilled developers designing with TI products. You are solely responsible for (1) selecting the appropriate TI products for your application, (2) designing, validating and testing your application, and (3) ensuring your application meets applicable standards, and any other safety, security, regulatory or other requirements.

These resources are subject to change without notice. TI grants you permission to use these resources only for development of an application that uses the TI products described in the resource. Other reproduction and display of these resources is prohibited. No license is granted to any other TI intellectual property right or to any third party intellectual property right. TI disclaims responsibility for, and you will fully indemnify TI and its representatives against, any claims, damages, costs, losses, and liabilities arising out of your use of these resources.

TI’s products are provided subject to TI’s Terms of Sale or other applicable terms available either on ti.com or provided in conjunction with such TI products. TI’s provision of these resources does not expand or otherwise alter TI’s applicable warranties or warranty disclaimers for TI products.

TI objects to and rejects any additional or different terms you may have proposed.

Mailing Address: Texas Instruments, Post Office Box 655303, Dallas, Texas 75265
Copyright © 2025, Texas Instruments Incorporated