BQ27Z758 Impedance Track™ Technology Battery Gas Gauge and Protection Solution for 1-Series Cell Li-Ion Battery Packs

1 Features

- Integrated battery gas gauge and protector
- Flash-programmable custom BQBMP RISC CPU
  - SHA-256 authentication
  - 400kHz I²C bus communications interface
- Low-voltage (2.0V) operation
- Zero volt charging with no inhibit (ZVCHG) for systems with secondary protectors
- Two independent precision 16-bit ADCs
  - Coulomb counting ADC with current sense resistor down to 1mΩ
  - Voltage ADC for cell voltage and external andinternal temperature sensors
- Battery fuel gauging based on patented Impedance Track™ technology
  - Models battery discharge curve for accurate time-to-empty predictions
  - Automatically adjusts for aging, temperature, and rate-induced effects on the battery
- Battery Kelvin sense differential analog output pins with built-in protection
- High-side or low-side current sensing
- Programmable hardware-based protection
  - High-side FET gate drivers
  - Overvoltage and undervoltage (OVP and UVP)
  - Overcurrent in discharge and overcurrent in charge (OCD and OCC)
  - Short circuit in discharge (SCD)
  - Firmware-based overtemperature (OT)
- Reduced typical power modes
  - SLEEP mode: 20µA
  - SHIP mode: 10µA
  - SHELF mode 5µA
  - SHUTDOWN mode: 0.2µA
- Ultra-compact, 15-ball NanoFree™ DSBGA

2 Applications

- Any end equipment with 1-series rechargeable batteries:
  - Smartphones
  - Tablets
  - Cameras
  - Portable wearables/medical
  - Industrial handhelds

3 Description

The Texas Instruments BQ27Z758 Impedance Track™ gas gauge solution is a highly integrated, accurate 1-series cell gas gauge and protection solution.

The BQ27Z758 device provides a fully integrated pack-based solution with a flash programmable custom reduced instruction-set CPU (RISC), safety protection, differential battery sensing analog output, and authentication for 1-series cell Li-ion and Li-polymer battery packs.

The BQ27Z758 gas gauge communicates through an I²C compatible interface and combines an ultra-low power TI BQBMP processor, high accuracy analog measurement capabilities, integrated flash memory, N-CH high-side FET drive, and a SHA-2 Authentication transform responder into a complete, high-performance battery management solution.

Package Information

PART NUMBER	PACKAGE (1)	BODY SIZE (NOM)
BQ27Z758	YAH (15)	1.69mm × 2.57mm

(1) For all available packages, see the orderable addendum at the end of the data sheet.

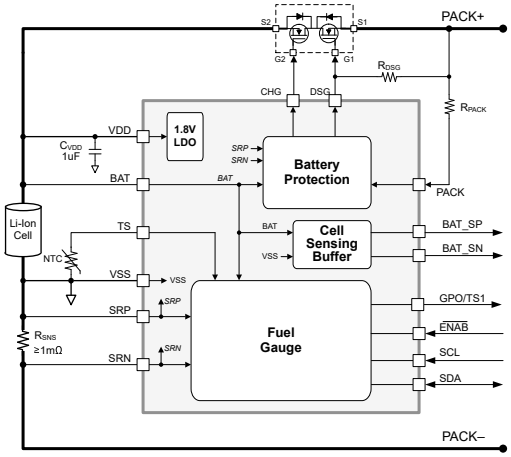

BQ27Z758 Simplified Schematic

An IMPORTANT NOTICE at the end of this data sheet addresses availability, warranty, changes, use in safety-critical applications, intellectual property matters and other important disclaimers. PRODUCTION DATA.

Table of Contents

1 Features....1
2 Applications....1
3 Description....1
4 Pin Configurations and Functions....3
5 Specifications....4
5.1 Absolute Maximum Ratings....4
5.2 ESD Ratings....5
5.3 Recommended Operating Conditions....5
5.4 Thermal Information....5
5.5 Electrical Characteristics....5
5.6 Digital I/O: DC Characteristics....13
5.7 Digital I/O: Timing Characteristics....13
5.8 Typical Characteristics....16
6 Detailed Description....17
6.1 Overview....17
6.2 Functional Block Diagram....17
6.3 Feature Description....18
6.4 Device Functional Modes....21
7 Applications and Implementation....23
7.1 Application Information....23
7.2 Typical Applications....23
8 Power Supply Requirements....27
9 Layout....27
9.1 Layout Guidelines....27
9.2 Layout Example....28
10 Device and Documentation Support....29
10.1 Third-Party Products Disclaimer....29
10.2 Documentation Support....29
10.3 Receiving Notification of Documentation Updates....29
10.4 Support Resources....29
10.5 Trademarks....29
10.6 Electrostatic Discharge Caution....29
10.7 Glossary....29
11 Revision History....30
12 Mechanical, Orderable, and Packaging Information....30

Copyright © 2025 Texas Instruments Incorporated

4 Pin Configurations and Functions

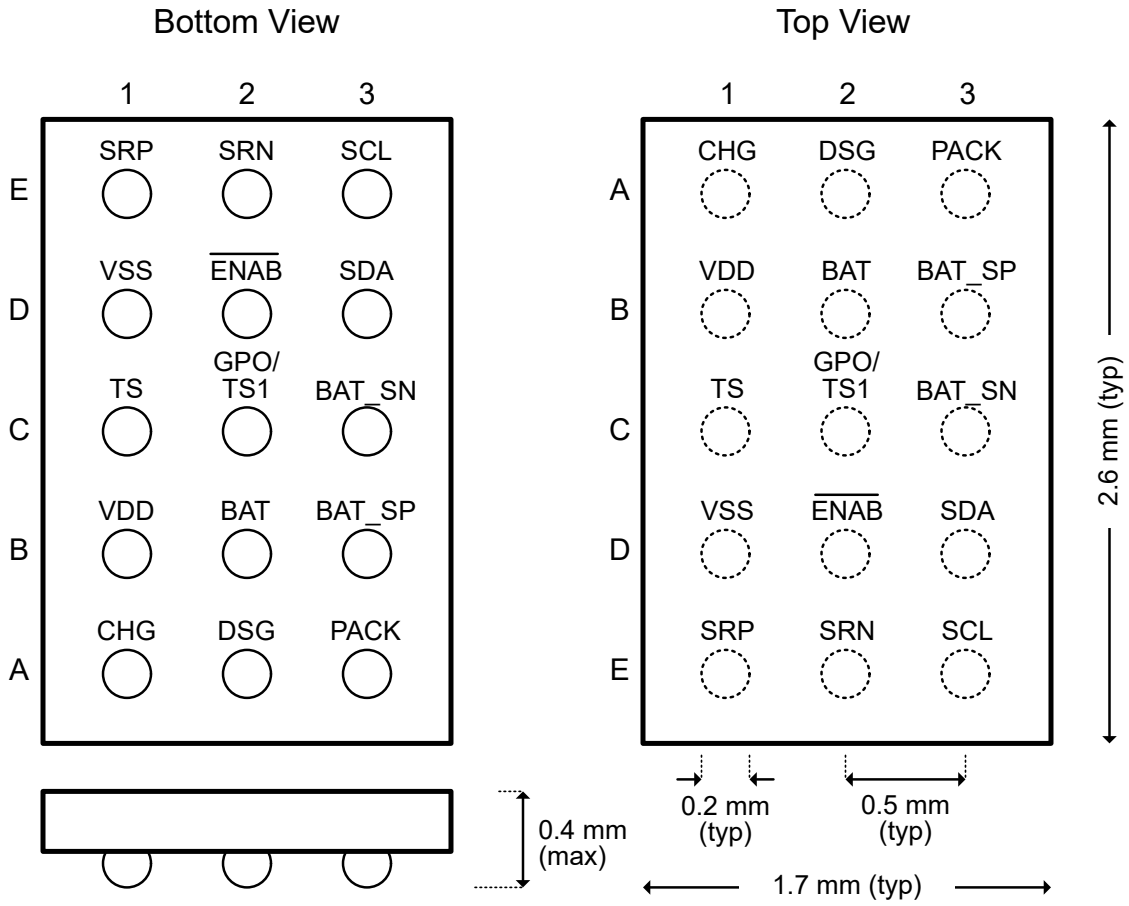

Figure 4-1. Pinout Diagram

Table 4-1. Pin Functions

PIN			DESCRIPTION
NAME	NO.	TYPE[1]	
CHG	A1	AO	Charge FET (CHG) driver
DSG	A2	AO	Discharge FET (DSG) driver. Connect a series 10-MΩ typical resistor (R_{DSG}) between DSG pin and PACK+ positive terminal.
PACK	A3	IA	Pack input voltage sensing pin. Connect a series 5-kΩ typical resistor (R_{PACK}) between PACK pin and PACK+ positive terminal.
VDD	B1	P	LDO regulator input. Connect a 1-µF typical capacitor (C_{VDD}) between VDD and VSS. Place the capacitor close to the gauge.
BAT	B2	IA	Battery voltage measurement sense input
BAT_SP	B3	OA	Cell sense output, positive
BAT_SN	C3	OA	Cell sense output, negative
TS	C1	IA	Thermistor input to ADC with internal 18-kΩ pullup resistor
GPO/TS1	C2	I/O	General purpose output. Optional TS1 ADC input channel with internal 18-kΩ pullup resistor
VSS	D1	P	Device ground
$\overline{ENAB}$	D2	I	Active low digital input with weak internal pullup to VDD. If enabled for ultra-low power SHELF mode, driving this signal low will enable the device to wake up.
SDA	D3	I/O	Digital input, open drain output for I^2C serial data. Use with a typical 10-kΩ pullup resistor.
SCL	E3	I/O	Digital input, open drain output for I^2C serial clock. Use with a typical 10-kΩ pullup resistor.
SRP	E1	IA	This is the positive analog input pin connected to the internal coulomb-counter peripheral for integrating a small voltage between SRP (positive side) and SRN (negative side).
SRN	E2	IA	This is the negative analog input pin connected to the internal coulomb-counter peripheral for integrating a small voltage between SRP (positive side) and SRN (negative side).

(1) I/O = Digital input/output, IA = Analog input, AO= Analog output, P = Power connection

5 Specifications

5.1 Absolute Maximum Ratings

over operating free-air temperature range (unless otherwise noted)[1]

		MIN	MAX	UNIT
Supply voltage range	VDD	–0.3	6	V
Input voltage range	PACK (limited to 4 mA max)	–0.3	8	V
	PACK+ external battery pack input terminal with 5 kΩ resistor in series to device PACK input pin	–0.3	24	
	PACK+ external battery pack input terminal with a 5 kΩ resistor (R_{PACK}) in series to device PACK pin and a 10 MΩ resistor (R_{DSG}) to device DSG pin	–12	24	
	BAT	–0.3	6	
	SDA, SCL, $\overline{ENAB}$	–0.3	6	
	TS	–0.3	2	
	SRP, SRN	–0.3	V_{BAT} + 0.3	
Output voltage range	BAT_SP, BAT_SN	–0.3	6	V
	CHG, DSG	–0.3	12	
Operating junction temperature, T_J		–40	85	°C
Storage temperature, T_{stg}		–65	150	°C

(1) Operation outside the Absolute Maximum Ratings may cause permanent device damage. Absolute Maximum Ratings do not imply functional operation of the device at these or any other conditions beyond those listed under Recommended Operating Conditions. If outside the Recommended Operating Conditions but within the Absolute Maximum Ratings, the device may not be fully functional, and this may affect device reliability, functionality, performance, and shorten the device lifetime.

Copyright © 2025 Texas Instruments Incorporated

5.2 ESD Ratings

			VALUE	UNIT
$V_{(ESD)}$	Electrostatic discharge	Human-body model (HBM) on all pins, per ANSI/ESDA/JEDEC JS-001[(1)]	±2000	V
		Charged-device model (CDM) on all pins, per ANSI/ESDA/JEDEC JS-002[(2)]	±500	

(1) JEDEC document JEP155 states that 500-V HBM allows safe manufacturing with a standard ESD control process.
(2) JEDEC document JEP157 states that 250-V CDM allows safe manufacturing with a standard ESD control process.

5.3 Recommended Operating Conditions

over operating free-air temperature range (unless otherwise noted)

		MIN	NOM	MAX	UNIT
Supply voltage range	VDD	2.0		5.5	V
Input voltage range	PACK (with 5 kΩ R_{PACK} current limit)	0		12	V
	PACK (no R_{PACK} current limit)	0		5.5	
	BAT	1.5		5.5	
	SDA, SCL, $\overline{ENAB}$	–0.3		VDD	
	TS	VSS		1.8	
	SRN, SRP	V_{CC_CM} – 0.1		V_{CC_CM} + 0.1	
Output voltage range	BAT_SP, BAT_SN	2		VDD +V_{OFFS}	V
	GPO	VSS		1.8	
	CHG, DSG	VSS		VDD+ (VDD × A_{FETON})	
External Decoupling Capacitor on VDD pin, C_{VDD}		1			µF
External Decoupling Capacitor on TS pin, C_{TS}				0.01	µF
External Sense Resistor from PACK+ terminal to device PACK pin, R_{PACK}		5			kΩ
External Sense Resistor from PACK+ terminal to device DSG pin, R_{DSG}		10			MΩ
External Sense Resistor from SRN to SRP pins, R_{SNS}		1		20	mΩ
Operating Temperature, T_A		-40		85	℃

5.4 Thermal Information

Over-operating free-air temperature range (unless otherwise noted)

THERMAL METRIC[(1)]		YAH (DSBGA) (15 PINS)	UNIT
$R_{\theta JA}$	Junction-to-ambient thermal resistance	70	°C/W
$R_{\theta JC(top)}$	Junction-to-case (top) thermal resistance	17	
$R_{\theta JB}$	Junction-to-board thermal resistance	20	
ψ_{JT}	Junction-to-top characterization parameter	1	
ψ_{JB}	Junction-to-board characterization parameter	18	
$R_{\theta JC(bot)}$	Junction-to-case (bottom) thermal resistance	NA	

(1) For more information about traditional and new thermal metrics, see the *Semiconductor and IC Package Thermal Metrics application report*.

5.5 Electrical Characteristics

5.5.1 Supply Current

Unless otherwise noted, characteristics noted under conditions of T_A = –40 to 85°C, no host communications, PROT On[(1)], V_{CHG} and V_{DSG} > 5 V, C_{LOAD} = 8 nF (typical 20 nA), VDD = 4 V, Average current over 30 s with default firmware settings

PARAMETER	TEST CONDITIONS	MIN	TYP	MAX	UNIT
I_{NORMAL}	Standard operating conditions		86		µA
I_{SLEEP}	Measured current ≤ sleep current threshold		20		µA
I_{SHIP}	V_{BAT} = 3.0 V, Firmware SHIP mode enabled. 60 s average		10		µA
I_{SHELF}	V_{BAT} = 3.0 V, Firmware SHELF mode enabled. PROT Off . 60 s average		5		µA
I_{SHUT}	Firmware SHUTDOWN mode enabled OR V_{BAT} ≤ V_{SHUT}, PROT Off		0.2	1	µA

(1) PROT On/Off. Protector block enabled with both DSG and CHG pins On or Off.

5.5.2 Common Analog (LDO, LFO, HFO, REF1, REF2, I-WAKE)

Unless otherwise noted, characteristics noted under conditions of T_A = –40 to 85°C

PARAMETER		TEST CONDITIONS	MIN	TYP	MAX	UNIT
Internal 1.8-V LDO (REG18)						
V_{REG18}	Regulator output voltage		1.6	1.8	2.0	V
$\Delta V_{REG18TEMP}$	Regulator output change with temperature	$\Delta V_{BAT}/\Delta T_A$, I_{REG18} = 10 mA	–1.2%		+1.2%	
$\Delta V_{REG18LINE}$	Line regulation		–0.8%		0.8%	
$\Delta V_{REG18LOAD}$	Load regulation	I_{REG18} = 16 mA	–1.5%		1.5%	
I_{SHORT}	Short Circuit Current Limit	V_{REG18} = 0 V	18		60	mA
$PSRR_{REG18}$	Power Supply Rejection Ratio	$\Delta V_{BAT}/\Delta V_{REG18}$, I_{REG18} = 10 mA, V_{BAT} > 2.5 V, f = 10 Hz		50		dB
V_{PORth}	POR threshold	Rising Threshold	1.55	1.65	1.75	V
V_{PORhy}	POR hysteresis			0.1		V
V_{ENAB}	$\overline{ENAB}$ turn-on voltage for LDO [(1)]	Active low falling threshold			0.4	V
R_{ENAB}	$\overline{ENAB}$ pin pullup resistance [(1)]	Internal pull-up to VDD	0.7	1	1.3	MΩ
$V_{STARTUP}$	Minimum PACK pin turn-on voltage for LDO [(1)]			2		V
Low Frequency Internal Oscillator (LFO)						
f_{LFO}	LFO Operating frequency	Normal operating mode		65.536		kHz
$f_{LFO(ERR)}$	LFO Frequency error		–2.5%		+2.5%	
f_{LFO32}	LFO operating frequency	Low power mode		32.768		kHz
$f_{LFO32(ERR)}$	LFO frequency error		–5%		+5%	
High Frequency Internal Oscillator (HFO)						
f_{HFO}	HFO operating frequency			16.78		MHz
$f_{HFO(ERR)}$	HFO frequency error	TA = –20°C to 70°C	–2.5%		2.5%	
		TA = –40°C to 85°C	–3.5%		3.5%	
$t_{HFOSTART}$	HFO start-up time	T_A = –40°C to 85°C, CLKCTL[HFRAMP] = 1, oscillator frequency within +/- 3% of nominal frequency or a power-on reset			4	ms
Voltage Reference1 (VREF1)						

Copyright © 2025 Texas Instruments Incorporated

5.5.2 Common Analog (LDO, LFO, HFO, REF1, REF2, I-WAKE) (continued)

Unless otherwise noted, characteristics noted under conditions of T_A = –40 to 85°C

PARAMETER		TEST CONDITIONS	MIN	TYP	MAX	UNIT
V_{REF1}	Internal reference voltage	REF1 is for protection circuits, LDO, and CC	1.195	1.21	1.227	V
V_{REF1_DRIFT}	Internal Reference Voltage Drift		–80		+80	PPM/°C
Voltage Reference2 (VREF2)						
V_{REF2}	Internal Reference Voltage	REF2 is for the ADC	1.2	1.21	1.22	V
V_{REF2_DRIFT}	Internal Reference Voltage Drift		–20		+20	PPM/°C
Wake-Up Comparator (I-WAKE)						
V_{WAKE}	Sense resistor voltage threshold range to wake-up gauge from low-power states (2)	500 µV step. Data Flash firmware default is 2 mV typical	–1.5	–2.0	–2.5	mV
I_{WAKE}	Effective wake-up current threshold range	Ideal R_{SNS} = 1 mΩ	–1000		–3000	mA
		Ideal R_{SNS} = 2 mΩ	–500		–1500	
		Ideal R_{SNS} = 5 mΩ	–200		–600	
V_{WAKE_ACC}	Wake-up detection accuracy (2)		–250		250	µV
t_{WAKE}	I-WAKE detection delay options (1)	Configurable with two delay options. Data Flash firmware default is 12 ms typical	9.6	12	14.4	ms
			19.2	24	28.8	

(1) Specified by design
(2) Data flash is configurable in FULL ACCESS mode and locked in SEALED. Accuracy is assured by factory trim at specified default threshold. A change in the factory threshold requires device calibration in the field.

5.5.3 Battery Protection (CHG, DSG)

Protection hardware circuits operating over free-air temperature range (unless otherwise noted)

PARAMETER		TEST CONDITIONS	MIN	TYP	MAX	UNIT
N-CH FET DRIVER, CHG AND DSG						
V_{DRIVER}	Gate Driver Voltage, V_{CHG} or V_{DSG}	C_{LOAD} = 8 nF		2 × VDD		V
A_{FETON}	FET driver gain factor, Vgs voltage to FET	A_{FETON} = (V_{driver} – VDD)/VDD, C_{LOAD} = 8 nF, UVP < VDD < 3.8 V	0.9	1.0	1.2	V/V
V_{DSGOFF}	DSG FET driver off output voltage	V_{DSGOFF} = V_{DSG} – PACK, C_L= 8 nF			0.2	V
V_{CHGOFF}	CHG FET driver off output voltage	V_{CHGOFF} = V_{CHG} – VSS , C_L= 8 nF			0.2	V
t_{rise}	FET driver rise time (1)	C_L = 8 nF, (Vdriver – VDD)/VDD = 1x V_{FETON} changes from VDD to 2×VDD		400	800	us
t_{fall}	FET driver fall time (1)	CL = 8 nF, V_{FETON} changes from V_{FETMAX} to V_{FETOFF}		50	200	us
V_{FET_SHUT}	Firmware FET driver shut down voltage (2) (4)	Configurable with 1-mV steps	2000	2100	5000	mV
$V_{FET_SHUT_REL}$	Firmware FET driver shut down release (2) (4)		2000	2300	5000	mV
I_{LOAD}	FET driver maximum loading				10	uA
VOLTAGE PROTECTION						
V_{OVP}	Hardware overvoltage protection (OVP) detection range (3)	Recommended threshold range. Factory trimmed in 50-mV steps	3500		5000	mV
	Factory default trimmed threshold(3)			4525		

5.5.3 Battery Protection (CHG, DSG) (continued)

Protection hardware circuits operating over free-air temperature range (unless otherwise noted)

PARAMETER		TEST CONDITIONS	MIN	TYP	MAX	UNIT
V_{OVP_ACC}	Hardware OVP detection accuracy (3)	TA = 25ºC, C_{LOAD} at CHG/DSG < 1 µA	–15		15	mV
		TA = 0ºC to 60ºC, C_{LOAD} at CHG/DSG < 1 µA	–25		25	mV
		TA = –40ºC to 85ºC, C_{LOAD} at CHG/DSG < 1 µA	–50		50	mV
V_{FW_OVP}	Firmware OVP detection range (4)	Configurable with 1-mV steps	2000	4490	5000	mV
$V_{FW_OVP_REL}$	Firmware OVP release range (4)		2000	4290	5000	mV
V_{UVP}	Hardware undervoltage (UVP) detection range (3)	Recommended threshold range. Factory trimmed in 50-mV steps	2000		4000	mV
	Factory default trimmed threshold(3)			2300		
V_{UVP_ACC}	Hardware UVP detection accuracy (3)	TA = 25ºC, C_{LOAD} at CHG/DSG < 1 µA	–20		20	mV
		TA = 0ºC to 60ºC, C_{LOAD} at CHG/DSG < 1uA	–30		30	mV
		TA = –40ºC to 85ºC, C_{LOAD} at CHG/DSG < 1uA	–50		50	mV
V_{FW_UVP}	Firmware UVP detection range (4)	Configurable with 1 mV steps	2000	2500	5000	
$V_{FW_UVP_REL}$	Firmware UVP release range (4)		2000	2900	5000	mV
$R_{PACK\text{-}VSS}$	Resistance between PACK and VSS	SHUTDOWN mode only	100	300	550	kΩ
V_{RCP}	Reverse Charge Protection limit	–10V Continuous Operating, –12 V ABS MAX	–10			V
CURRENT PROTECTION						
V_{OCC}	Sense voltage threshold range for Overcurrent in Charge (OCC) (3) (4)	Recommended threshold range. Factory trimmed in 1-mV steps	4		100	mV
	Factory default trimmed threshold(3)			14		
V_{OCC}	OCC 2-mV step design option	2 mV step configuration option	2		256	mV
I_{OCC}	Effective OCC current threshold range from V_{OCC} (1) (4)	Ideal R_{SNS} = 1 mΩ	4	14	100	A
		Ideal R_{SNS} = 2 mΩ	2	7	50	
		Ideal R_{SNS} = 5 mΩ	0.8	2.8	20	
I_{FW_OCC}	Firmware OCC detection range (4)	Configurable with 1 mA steps	0	12000	$+I_{CC_IN}$	mA
V_{OCD}	Sense voltage threshold range for Overcurrent in discharge (OCD) (3) (4)	Recommended threshold range. Factory trimmed in 1-mV steps	–4		–100	mV
	Factory default trimmed threshold(3)			–16		
V_{OCD}	OCD 2-mV step design option	±2 mV step configuration option	–2		–256	mV
I_{OCD}	Effective OCD current threshold range from V_{OCD} (1) (4)	Ideal R_{SNS} = 1 mΩ	–4	–16	–100	A
		Ideal R_{SNS} = 2 mΩ	–2	–8	–50	
		Ideal R_{SNS} = 5 mΩ	–0.8	–3.2	–20	
I_{FW_OCD}	Firmware OCD detection range (4)	Configurable with 1-mA steps	$-I_{CC_IN}$	–7000	0	mA
V_{SCD}	Sense voltage threshold range for Short circuit current in discharge (SCD) (3) (4)	Threshold factory trimmed with 1-mV steps	–5		–120	mV
	Factory default trimmed threshold(3)			–20		
I_{SCD}	Effective SCD current threshold range from V_{SCD} (1) (4)	Ideal R_{SNS} = 1 mΩ	–5	–20	–120	A
		Ideal R_{SNS} = 2 mΩ	–2.5	–10	–60	
		Ideal R_{SNS} = 5 mΩ	–1	–4	–24	

Copyright © 2025 Texas Instruments Incorporated

5.5.3 Battery Protection (CHG, DSG) (continued)

Protection hardware circuits operating over free-air temperature range (unless otherwise noted)

PARAMETER		TEST CONDITIONS	MIN	TYP	MAX	UNIT
V_{OC_ACC}	Overcurrent (OCC, OCD, SCD) detection accuracy (3)	<20 mV, TA = –25°C to 60ºC	-2.1		2.1	mV
		<20 mV	–2.1		2.1	
		20 mV–55 mV	–3		3	
		56 mV–100 mV	–5		5	
		>100 mV	–12		12	
$I_{PACK\text{-}VDD}$	Current sink between PACK and VDD during current fault	Load removal detection in firmware		15		µA
V_{OC_REL}	OCC fault release threshold	(V_{PACK} – V_{BAT})		100		mV
	OCD, SCD fault release threshold			–400		mV
OVERTEMPERATURE PROTECTION						
T_{OTC_TRIP}	OTC trip/release threshold (2) (4)	Firmware-based and configurable in 0.1°C steps	–40.0	55.0	150.0	°C
T_{OTC_REL}			–40.0	50.0	150.0	°C
T_{OTD_TRIP}	OTD trip/release threshold (2) (4)		–40.0	60.0	150.0	°C
T_{OTD_REL}			–40.0	55.0	150.0	°C
T_{UTC_TRIP}	UTC trip/release threshold (2) (4)		–40.0	0.0	150.0	°C
T_{UTC_REL}			–40.0	5.0	150.0	°C
T_{UTD_TRIP}	UTD trip/release threshold (2) (4)		–40.0	0.0	150.0	°C
T_{UTD_REL}			–40.0	5.0	150.0	°C
PROTECTION DELAY(1)						
t_{OVP}	OVP detection delay (debounce) options (1) (4)	Configurable with 4095 delay options in 1.953-ms steps. Factory default = 1000 ms (512 counts) typical	1.953	1000	7998	ms
t_{UVP}	UVP detection delay (debounce) options (1) (4)	Configurable with 127-delay options in 1.953-ms steps. Factory default = 127 ms (65 counts) typical	1.953	127	248	ms
t_{OCC}	OCC detection delay (debounce) options (1) (4)	Configurable with 31 delay options in 1.953-ms steps. Factory default = 7.8 ms (4 counts) typical	1.953	7.8	60.5	ms
t_{OCD}	OCD detection delay (debounce) options (1) (4)	Configurable with 255 delay options in 0.244-ms steps. Factory default = 15.9 ms (65 counts) typical	0.244	15.9	62.3	ms
t_{SCD}	SCD detection delay (debounce) options (1) (4)	Configurable with seven delay options in 122-µs steps. Factory default = 244-µs (2 counts) typical	122	244	854	µs
T_{OTC_DLY}	OTC trip delay(2) (4)	Firmware-based and configurable in 1-s steps. The typical value is the data flash factory default.	0	2	255	s
T_{OTD_DLY}	OTD trip delay(2) (4)		0	2	255	s
T_{UTC_DLY}	UTC trip delay(2) (4)		0	2	255	s
T_{UTD_DLY}	UTD trip delay(2) (4)		0	2	255	s
ZERO VOLT (LOW VOLTAGE) CHARGING						
V_{0CHGR}	Charger voltage required to start zero-volt charging	V_{0CHGR} = V_{PACK} – VSS	1.6			V

(1) Specified by design. Not production tested.
(2) Firmware-based parameter. Not production tested.
(3) Accuracy assured by factory trim at specified default threshold. A change from the default threshold requires device calibration in the field. Refer to the *BQ27Z746-R1 and BQ27Z758 Technical Reference Manual*.
(4) Specified typical value is the factory default. Not production tested. The data flash configuration value can be changed in FULL ACCESS mode and is locked in SEALED mode. Refer to the *BQ27Z746-R1 and BQ27Z758 Technical Reference Manual*.

Copyright © 2025 Texas Instruments Incorporated

5.5.4 Cell Sensing Output (BAT_SP, BAT_SN)

Unless otherwise noted, characteristics noted under conditions of T_A = –40 to 85°C

PARAMETER		TEST CONDITIONS	MIN	TYP	MAX	UNIT
Static Response						
V_{BUFACC}	Buffer accuracy (BAT_SP – BAT_SN)	V_{BAT} @ 1500 mV and 2400 mV DC, PACK-BAT_SP ≥ 200 mV, BAT_SP load: Hi-Z to 1 kΩ, BAT_SN load: 1 kΩ to 10 kΩ	1450	1500	1550	mV
			2350	2400	2450	
$V_{BUFOFFS}$	BAT_SN common mode shift (BAT_SN – VSS)	400-mV option, V_{BAT} = 1.5 V to 2.5 V	370	400	430	mV
		200-mV option, V_{BAT} = 2.0 V to 2.5 V	170	200	230	
		0-mV option, V_{BAT} = 2.0 V to 2.5 V	–30	0	30	
		600-mV option, V_{BAT} = 2.0 to 2.5 V	550	600	650	
ΔV_{BUF_LINE}	Buffer line regulation	V_{BAT} = 1.5 to 2.5 V, no load, BAT_SP – BAT_SN, V_{PACK} – V_{BAT} = 1.0 V		10		mV
ΔV_{BUF_LOAD}	Buffer load regulation	V_{BAT} = 2.4 V, load = 1 mA, BAT_SP – BAT_SN, V_{PACK} - V_{BAT} = 1.0 V		1.2		mV
V_{RLOACC}	RLO mode accuracy (BAT_SP – BAT_SN)	V_{BAT} = 3000-mV to 5000-mV DC, For stability, 0-mV buffer option enabled BAT_SP load: Hi-Z to 1 kΩ BAT_SN load: 1 kΩ to 10 kΩ	–7		+7	mV
$V_{RLOACCP}$	RLO mode accuracy (BAT_SP – VSS)		–5		+5	
$V_{RLOACCN}$	RLO mode accuracy (BAT_SN – VSS)		–5		+5	
R_{LO_SP}	BAT_SP low resistance mode	200-Ω option, DSG FET = ON	160	200	260	Ω
		510-Ω option, DSG FET = ON	459	510	561	
R_{LO_SN}	BAT_SN low resistance mode	200-Ω option, DSG FET = ON	160	200	260	Ω
		510-Ω option, DSG FET = ON	459	510	561	
R_{HIZ_SP}	BAT_SP high impedance mode	CHG FET = OFF	0.6	1.0	1.3	MΩ
R_{HIZ_SN}	BAT_SN high impedance mode		0.6	1.0	1.3	
t_{BUF_OFF}	Buffer turn-off timing (1)	Buffer disable timing respect to DSG FET turn-on		500		us
C_{BUF_SP}	Max external capacitance for stable operation (1)	BAT_SP to SRN (PACK–)			150	pF
C_{BUF_SN}		BAT_SN to SRN (PACK–)			150	
B_{BUF_BW}	Buffer unity gain bandwidth (1)	Buffer enabled		30		kHz
V_{BCP}	BAT_SP – BAT +Fault (BCP) Threshold Range(1)	Recommended threshold range. Factory trimmed in ≈2-mV steps	+100		+250	mV
	Factory default trimmed threshold(3)			+200		
V_{BCP_ACC}	BAT_SP – BAT +Fault Accuracy (3)	RLO mode enabled, Step size 10 mV	–10		+10	
V_{BDP}	BAT_SP – BAT –Fault (BDP) Threshold Range(1)	Recommended threshold range. Factory trimmed in ≈2-mV steps	–250		–100	mV
	Factory default trimmed threshold(3)			–200		
V_{BDP_ACC}	BAT_SP – BAT –Fault Accuracy (3)	RLO mode enabled, Step size 10 mV	–10		+10	

Copyright © 2025 Texas Instruments Incorporated

5.5.4 Cell Sensing Output (BAT_SP, BAT_SN) (continued)

Unless otherwise noted, characteristics noted under conditions of T_A = –40 to 85°C

PARAMETER		TEST CONDITIONS	MIN	TYP	MAX	UNIT
V_{BCN}	BAT_SN – VSS +Fault (BCN) Threshold Range[1]	Recommended threshold range. Factory trimmed in ≈2-mV steps	+100		+250	mV
	Factory default trimmed threshold[3]			+200		
V_{BCN_ACC}	BAT_SN – VSS +Fault Accuracy [3]	RLO mode enabled, Step size 10 mV	–10		+10	
V_{BDN}	BAT_SN – VSS –Fault (BDN) Threshold Range[1]	Recommended threshold range. Factory trimmed in ≈2-mV steps	–250		–100	mV
	Factory default trimmed threshold[3]			–200		
V_{BDN_ACC}	BAT_SN – VSS –Fault Accuracy [3]	RLO mode enabled, Step size 10 mV	–10		+10	
$t_{LO_FAULT_DLY}$	BAT_SP / BAT_SN fault comparator delay[1]	8-ms delay		8		ms
		100-ms delay		100		ms
$t_{LO_FAULT_STRT}$	BAT_SP / BAT_SN fault restart time [1] [2]			1000		ms
Transient Response						
V_{LOAD_SP}	BAT_SP load transient [1]	No load ≥ 1 KΩ ≥ No load, Transition time 1 µs	–300		300	mV
V_{LOAD_SN}	BAT_SN load transient [1]		–200		200	mV
V_{LINE_SN}	BAT_SN line transient [1]	VBAT = 1.5V ≥ 2.4 V ≥ 1.5V, Transition slope 500 mV / 10 us	–30		30	mV
V_{TRANS}	(BAT_SP – BAT_SN) transition transient [1]	Firmware commanded transition from BUF mode to RLO mode	–700		50	mV

(1) Specified by Design. Not production tested.
(2) Firmware-based parameter. Not production tested.
(3) Accuracy assured by factory trim at specified default threshold. A change from the default threshold requires device calibration in the field. Refer to the *BQ27Z746-R1 and BQ27Z758 Technical Reference Manual*.

5.5.5 Gauge Measurements (ADC, CC, Temperature)

Unless otherwise noted, characteristics noted under conditions of T_A = –40 to 85°C

PARAMETER		TEST CONDITIONS	MIN	TYP	MAX	UNIT
Analog Digital Converter (ADC)						
V_{BAT_RES}	Battery Voltage ADC Resolution (bits)	Signed data format, ±15 bits		16		bits
V_{BAT_FS}	Battery Measurement Full Scale Range		–0.2		5.5	V
V_{BAT_ERR}	Battery Voltage ADC Error	T_A = +25°C, V_{BAT} = 4.0 VDC		±1		mV
		V_{BAT} = 2.5 to 5.0 VDC		±2		
R_{BAT}	Effective input resistance		8			MΩ
t_{BAT}	Battery Voltage Conversion Time			11.7		ms
V_{ADC_RES}	Effective Resolution	V_{BAT}	14	15		bits
Coulomb Counter (CC)						
V_{CC_CM}	Common mode voltage range	V_{SS} = 0V, 2V ≤ V_{BAT} ≤ 5V	V_{SS}		V_{BAT}	V
V_{CC_IN}	Input voltage range		V_{CC_CM}–0.1		V_{CC_CM}+0.1	V

5.5.5 Gauge Measurements (ADC, CC, Temperature) (continued)

Unless otherwise noted, characteristics noted under conditions of T_A = –40 to 85°C

PARAMETER		TEST CONDITIONS	MIN	TYP	MAX	UNIT
I_{CC_IN}	Effective input current sense range (1) (2)	Ideal R_{SNS} = 1 mΩ (16-bit data limited)		±32,768		mA
		Ideal R_{SNS} = 2 mΩ (16-bit data limited)				
		Ideal R_{SNS} = 5 mΩ		±20,000		
t_{CC_CONV}	Conversion time	Single conversion		1000		ms
CC_{ADC_RES}	Effective Resolution			16		bits
		1 LSB = VREF1/10/(±2^{15})		±3.7		µV
I_{CC_ERR}	Effective current measurement error	Ideal R_{SNS} = 1.0 mΩ, 10.0 A, T_A = 25 °C		26		mA
		Ideal R_{SNS} = 1.0 mΩ, –10.0 A, T_A = 25 °C		29		
CC_{OSE}	Offset error	16- bit Post-Calibration	-2.6	1.3	+2.6	LSB
CC_{OSE_DRIFT}	Offset error drift	15-bit + sign, Post Calibration		0.04	0.07	LSB/°C
CC_{GE}	Gain Error	15-bit + sign, Over input voltage range	-492	131	+492	LSB
R_{CC_IN}	Effective input resistance		7			MΩ
NTC Thermistor Measurement						
$R_{NTC(PU)}$	Internal Pullup Resistance	Factory Trimmed, Firmware compensated	14.4	18	21.6	kΩ
$R_{NTC(DRIFT)}$	Resistance drift over temperature	Firmware compensated	–250	–120	0	PPM/°C
R_{NTC_ERR}	External NTC Thermistor Temperature Measurement Error with Linearization	Ideal 10KΩ 103AT NTC, TA = –10 to 70°C	–2	±1	+2	°C
		Ideal 10KΩ 103AT NTC, TA = –40 to 85°C	–3	±2	+3	
Internal Temperature Sensor						
$V_{(TEMP)}$	Internal Temperature sensor voltage drift	V_{TEMPP}	1.65	1.73	1.8	mV/°C
$V_{(TEMP)}$	Internal Temperature sensor voltage drift	V_{TEMPP} – V_{TEMPN} (specified by design)	0.17	0.18	0.19	mV/°C

(1) Firmware-based parameter. Not production tested.
(2) Limited by 16-bit twos-complement numeric format

5.5.6 Flash Memory

Unless otherwise noted, characteristics noted under conditions of T_A = –40 to 85°C

PARAMETER		TEST CONDITIONS	MIN	TYP	MAX	UNIT
	Data retention		10	100		Years
	Flash programming write cycles	Data Flash	20000			Cycles
		Instruction Flash	1000			Cycles
$t_{(ROWPROG)}$	Row programming time				40	µs
$t_{(MASSERASE)}$	Mass-erase time	TA = –40°C to 85°C			40	ms
$t_{(PAGEERASE)}$	Page-erase time	TA = –40°C to 85°C			40	ms
$I_{FLASHREAD}$	Flash Read Current	TA = –40°C to 85°C			1	mA
$I_{FLASHWRTIE}$	Flash Write Current	TA = –40°C to 85°C			5	mA
$I_{FLASHERASE}$	Flash Erase Current	TA = –40°C to 85°C			15	mA

Copyright © 2025 Texas Instruments Incorporated

5.6 Digital I/O: DC Characteristics

Unless otherwise noted, characteristics noted under conditions of T_A = –40 to 85°C, V_{REG18} = 1.8 V

PARAMETER		TEST CONDITIONS	MIN	TYP	MAX	UNIT
I²C Pins (SCL, SDA/HDQ)						
V_{IH}	High-level input voltage	SCL, SDA pins	1.26			V
V_{IL}	Low-level input voltage low	SCL, SDA pins			0.54	V
V_{OL}	Low-level output voltage	SCL, SDA pins, I_{OL} = 1 mA			0.36	V
C_I	Input capacitance	SCL, SDA pins			10	pF
I_{lkg}	Input leakage current	SCL, SDA pins		1		µA
Push-Pull Pins (GPO)						
V_{IH}	High-level input voltage	Push-Pull pins	1.15			V
V_{IL}	Low-level input voltage low	Push-Pull pins			0.54	V
V_{OH}	Output voltage high	Push-Pull pins, I_{OH} = -1 mA	1.08			V
V_{OL}	Output voltage low	Push-Pull pins, I_{OL} = 1 mA			0.36	V
C_I	Input capacitance	Push-Pull pins			10	pF
I_{lkg}	Input leakage current	Push-Pull pins		1		µA

5.7 Digital I/O: Timing Characteristics

PARAMETER		TEST CONDITIONS	MIN	NOM	MAX	UNIT
I²C Timing — 100 kHz						
f_{SCL}	Clock Operating Frequency	SCL duty cycle = 50%			100	kHz
$t_{HD:STA}$	START Condition Hold Time		4.0			µs
t_{LOW}	Low period of the SCL Clock		4.7			µs
t_{HIGH}	High period of the SCL Clock		4.0			µs
$t_{SU:STA}$	Setup repeated START		4.7			µs
$t_{HD:DAT}$	Data hold time (SDA input)		0			ns
$t_{SU:DAT}$	Data setup time (SDA input)		250			ns
t_r	Clock Rise Time	10% to 90%			1000	ns
t_f	Clock Fall Time	90% to 10%			300	ns
$t_{SU:STO}$	Setup time STOP Condition		4.0			µs
t_{BUF}	Bus free time STOP to START		4.7			µs
I2C Timing — 400 kHz						
f_{SCL}	Clock Operating Frequency	SCL duty cycle = 50%			400	kHz
$t_{HD:STA}$	START Condition Hold Time		0.6			µs
t_{LOW}	Low period of the SCL Clock		1.3			µs
t_{HIGH}	High period of the SCL Clock		600			ns
$t_{SU:STA}$	Setup repeated START		600			ns
$t_{HD:DAT}$	Data hold time (SDA input)		0			ns
$t_{SU:DAT}$	Data setup time (SDA input)		100			ns
t_r	Clock Rise Time	10% to 90%			300	ns
t_f	Clock Fall Time	90% to 10%			300	ns
$t_{SU:STO}$	Setup time STOP Condition		0.6			µs
t_{BUF}	Bus free time STOP to START		1.3			µs
HDQ Timing						
t_B	Break Time		190			µs

Copyright © 2025 Texas Instruments Incorporated

5.7 Digital I/O: Timing Characteristics (continued)

PARAMETER		TEST CONDITIONS	MIN	NOM	MAX	UNIT
t_{BR}	Break Recovery Time		40			µs
t_{HW1}	Host Write 1 Time	Host drives HDQ	0.5		50	µs
t_{HW0}	Host Write 0 Time	Host drives HDQ	86		145	µs
t_{CYCH}	Cycle Time, Host to device	device drives HDQ	190			µs
t_{CYCD}	Cycle Time, device to Host	device drives HDQ	190	205	250	µs
t_{DW1}	Device Write 1 Time	device drives HDQ	32		50	µs
t_{DW0}	Device Write 0 Time	device drives HDQ	80		145	µs
t_{RSPS}	Device Response Time	device drives HDQ	190		950	µs
t_{TRND}	Host Turn Around Time	Host drives HDQ after device drives HDQ	250			µs
t_{RISE}	HDQ Line Rising Time to Logic 1				1.8	µs
t_{RST}	HDQ Reset	Host drives HDQ low before device reset	2.2			s

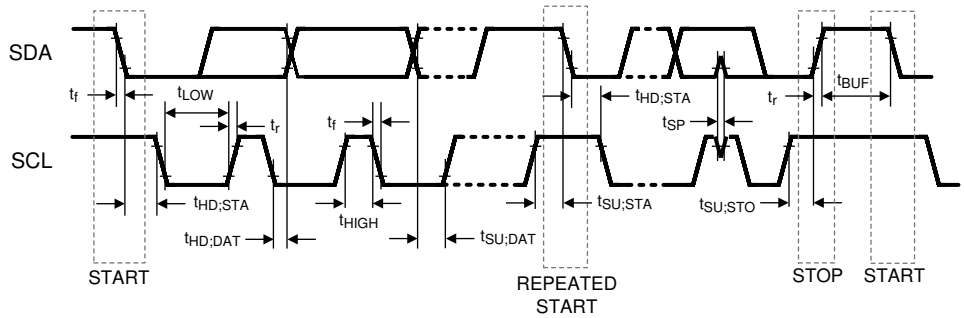

Figure 5-1. I²C Timing

Copyright © 2025 Texas Instruments Incorporated

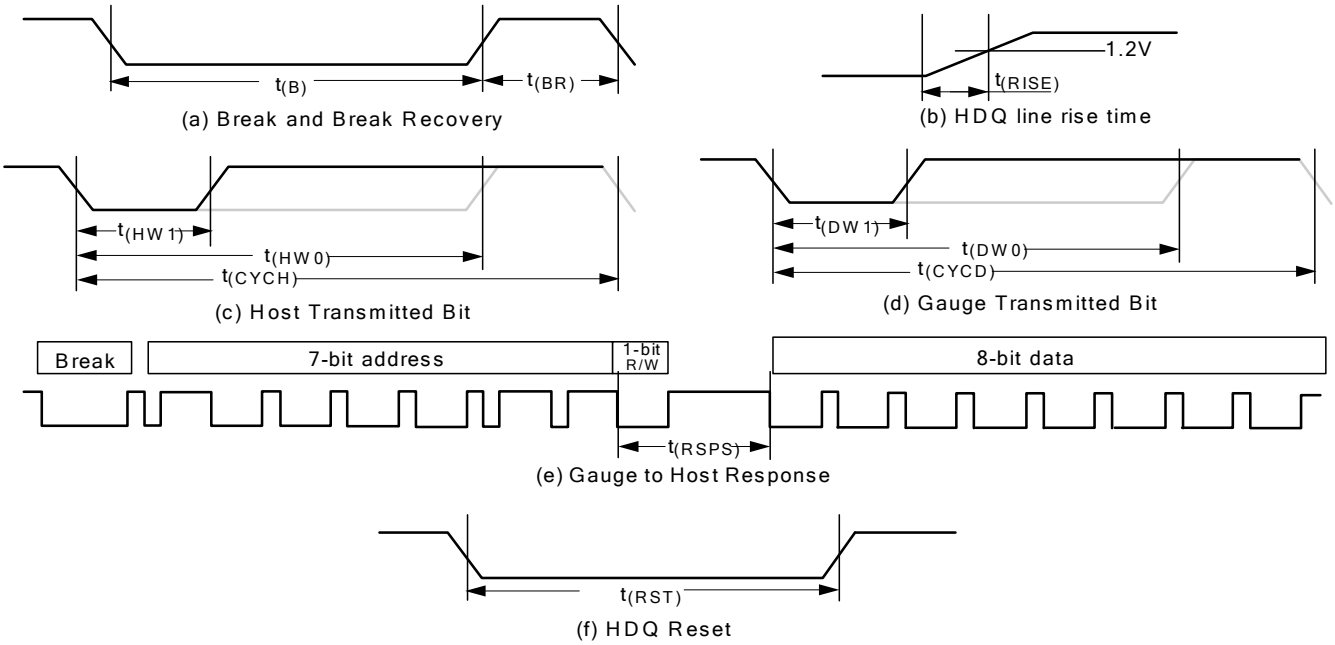

a. HDQ Breaking
b. Rise time of HDQ line
c. HDQ Host to fuel gauge communication
d. Fuel gauge to Host communication
e. Fuel gauge to Host response format
f. HDQ Host to fuel gauge

Figure 5-2. HDQ Timing

5.8 Typical Characteristics

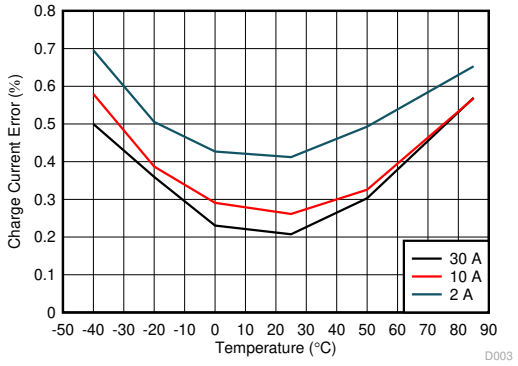

Figure 5-3. Charge Current Error vs Temperature and Charger Current with 1mΩ sense, No Calibration

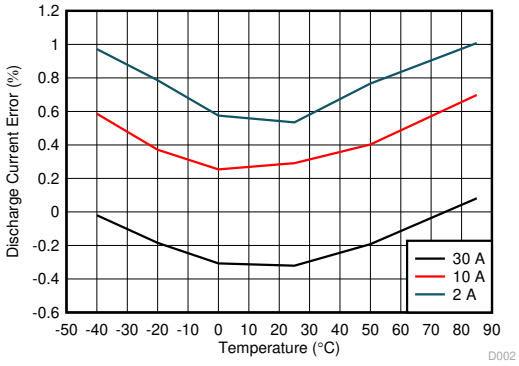

Figure 5-4. Discharge Current Error vs Temperature and Load Current with 1mΩ Sense, No Calibration

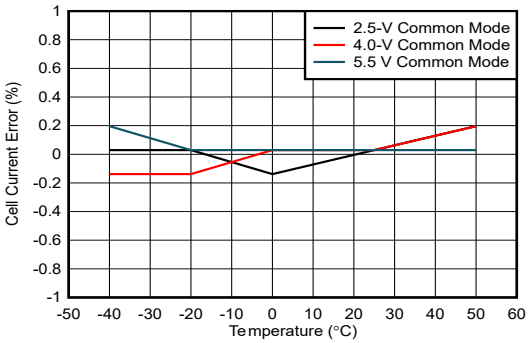

Figure 5-5. 2.2A Current Error vs CC ADC Input Common Mode Voltage and Temperature, No Calibration

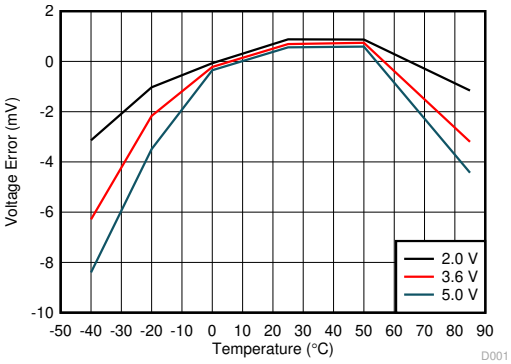

Figure 5-6. Cell Voltage Error vs Battery Voltage and Temperature

Copyright © 2025 Texas Instruments Incorporated

6 Detailed Description

6.1 Overview

The BQ27Z758 gas gauge is a fully integrated battery manager that employs flash-based firmware to provide a complete solution for battery-stack architectures composed of 1-series cells. The BQ27Z758 device interfaces with a host system through an I^{2}C or HDQ protocol. High-performance, integrated analog peripherals enable support for a sense resistor down to 1 mΩ, and simultaneous current/voltage data conversion for instant power calculations. The following sections detail all of the major component blocks included as part of the BQ27Z758 device.

6.2 Functional Block Diagram

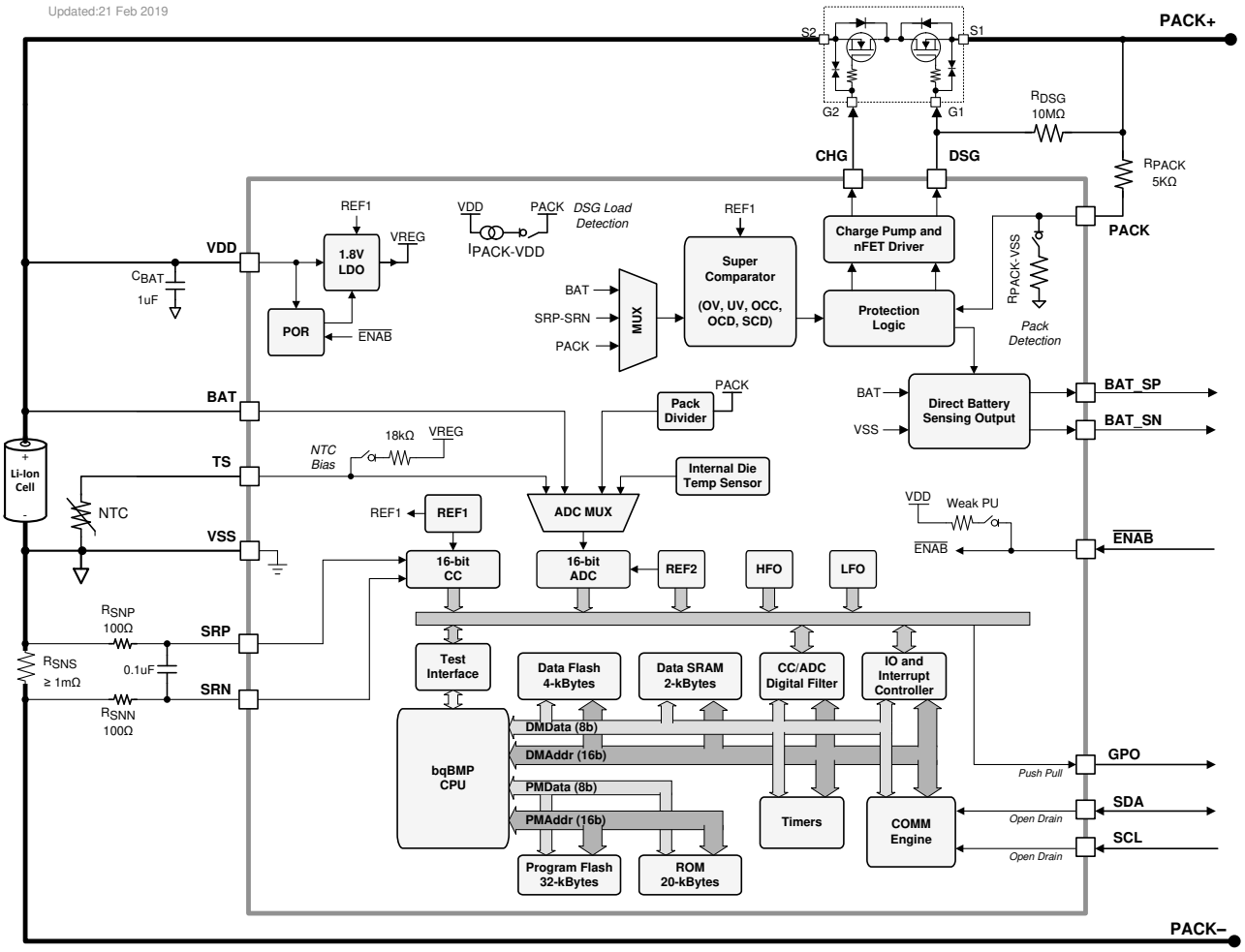

6.3 Feature Description

6.3.1 BQ27Z758 Processor

The BQ27Z758 device uses a custom TI-proprietary processor design that features a Harvard architecture and operates at frequencies up to 4.2 MHz. Using an adaptive, three-stage instruction pipeline, the BQ27Z758 processor supports variable instruction lengths of 8, 16, or 24 bits.

6.3.2 Battery Parameter Measurements

The BQ27Z758 device measures cell voltage and current simultaneously, and also measures temperature to calculate the information related to remaining capacity, full charge capacity, state-of-health, and other gauging parameters.

6.3.2.1 Coulomb Counter (CC) and Digital Filter

The first ADC is an integrating analog-to-digital converter designed specifically for tracking charge and discharge activity, or coulomb counting, of a rechargeable battery. It features a single-channel differential input that converts the voltage difference across a sense resistor between the SRP and SRN terminals with a resolution of 3.74 µV. The differential input common mode voltage range is from V_{SS} to V_{BAT} and supports a 1-series cell high-side or low-side sensing option with ±0.1-V input range. The CC digital filter generates a 16-bit conversion value from the delta-sigma CC front-end. New conversions are available every 1 s.

6.3.2.2 ADC Multiplexer

The ADC multiplexer provides selectable connections to the external pins, BAT and TS, as well as the internal temperature sensor. In addition, the multiplexer can independently enable the TS input connection to the internal thermistor biasing circuitry, and enables the user to short the multiplexer inputs for test and calibration purposes.

6.3.2.3 Analog-to-Digital Converter (ADC)

The second ADC is a 16-bit delta-sigma converter designed for general-purpose measurements. The ADC automatically scales the input voltage range during sampling based on channel selection. The converter resolution is a function of its full-scale range and number of bits, yielding a 38-µV resolution.

6.3.2.4 Internal Temperature Sensor

An internal temperature sensor is available on the BQ27Z758 device to reduce the cost, power, and size of the external components necessary to measure temperature. It is available for connection to the ADC using the multiplexer, and is ideal for quickly determining pack temperature under a variety of operating conditions.

6.3.2.5 External Temperature Sensor Support

The TS input is enabled with an internal 18-kΩ (Typ.) linearization pull-up resistor to support the use of a 10-kΩ (25°C) NTC external thermistor, such as the Semitec 103AT-2. The NTC thermistor should be connected between VSS and the individual TS pin. The analog measurement is then taken by the ADC through its input multiplexer. If a different thermistor type is required, then changes to configurations may be required.

Copyright © 2025 Texas Instruments Incorporated

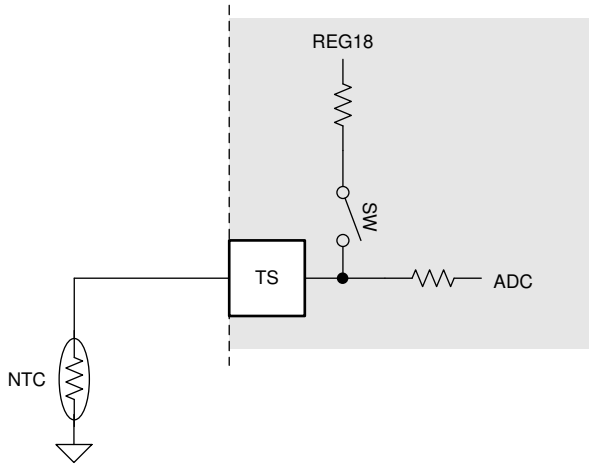

Figure 6-1. External Thermistor Biasing

6.3.3 Power Supply Control

The BQ27Z758 device uses the VDD pin as its power source. VDD powers the internal voltage sources that supply references for the device. The BAT pin is a non-current carrying path and used as a Kelvin sense connection to the battery cell.

6.3.4 $\overline{\text{ENAB}}$ Pin

The BQ27Z758 device can use the active low digital input $\overline{\text{ENAB}}$ pin to exit the device's SHELF and SHUTDOWN power modes. The digital input is connected to a weak internal pullup to VDD. A push-button can be connected to the $\overline{\text{ENAB}}$ pin to drive the pin to a low state for the device to exit SHELF or SHUTDOWN mode.

If the $\overline{\text{ENAB}}$ pin is connected directly to the device's GND reference (VSS), the BQ27Z758 device will not be able to enter SHELF or SHUTDOWN mode.

The $\overline{\text{ENAB}}$ pin can be left floating if using a push-button to exit SHELF or SHUTDOWN mode is not needed. The $\overline{\text{ENAB}}$ pin can also be left floating if the device needs the capability to enter SHELF or SHUTDOWN mode.

6.3.5 Bus Communication Interface

The BQ27Z758 device has an I^2C bus communication interface. Alternatively, the device can be configured to communicate through the HDQ pin (shared with SDA). When performing operations while the device firmware is not actively executing (such as programming authentication keys or firmware onto the device), communicate to the device with 100KHz I2C clock frequency.

Note

Once the device is switched to the HDQ protocol, it is not reversible.

6.3.6 Low Frequency Oscillator

The BQ27Z758 device includes a low frequency oscillator (LFO) running at 65.536 kHz.

6.3.7 High Frequency Oscillator

The BQ27Z758 includes a high frequency oscillator (HFO) running at 16.78 MHz. It is frequency locked to the LFO output and scaled down to 8.388 MHz with a 50% duty cycle.

6.3.8 1.8-V Low Dropout Regulator

The BQ27Z758 device contains an integrated capacitor-less 1.8-V LDO (REG18) that provides regulated supply voltage for the device CPU and internal digital logic.

Copyright © 2025 Texas Instruments Incorporated

6.3.9 Internal Voltage References

The BQ27Z758 device provides two internal voltage references. REF1 is used by REG18, oscillators, and CC. REF2 is used by the ADC.

6.3.10 Overcurrent in Discharge Protection

The overcurrent in discharge (OCD) function detects abnormally high current in the discharge direction. The overload in discharge threshold and delay time are configurable through the firmware register. The thresholds and timing can be fine-tuned even further based on a sense resistor with lower resistance or wider tolerance through calibration. When an OCD event occurs, the ***Safety Status*** flag is set to 1 and is latched until it is cleared and the fault condition his removed.

6.3.11 Overcurrent in Charge Protection

The overcurrent in charge (OCC) function detects abnormally high current in the charge direction. The overload in charge threshold and delay time are configurable through the firmware register. The thresholds and timing can be fine-tuned even further based on a sense resistor with lower resistance or wider tolerance through calibration. When an OCC event occurs, the ***Safety Status*** flag bit is set to 1 and is latched until it is cleared and the fault condition is removed.

6.3.12 Short-Circuit Current in Discharge Protection

The short-circuit current in discharge (SCD) function detects catastrophic current conditions in the discharge direction. The short-circuit in discharge thresholds and delay times are configurable through the firmware register. The thresholds and timing can be fine-tuned even further based on a sense resistor with lower resistance or wider tolerance with calibration. The detection circuit also incorporates a delay before disabling the CHG and DSG FETs. When an SCD event occurs, the ***Safety Status*** flag bit is set to 1 and is latched until it is cleared and the fault condition is removed.

6.3.13 Primary Protection Features

The BQ27Z758 gas gauge supports the following battery and system level protection features, which can be configured using firmware:

- Cell Undervoltage Protection
- Cell Overvoltage Protection
- Overcurrent in CHARGE Mode
- Overcurrent in DISCHARGE Mode
- Overload in DISCHARGE Mode
- Short Circuit in DISCHARGE Mode
- Overtemperature in CHARGE Mode
- Overtemperature in DISCHARGE Mode
- Precharge Timeout
- Fast Charge Timeout

6.3.14 Battery Sensing

The BQ27Z758 offers direct battery sensing through differential battery sensing pins BAT_SP and BAT_SN for accurate battery voltage measurement and detection. BQ27Z758 battery sensing path includes protection and isolation to minimize any leakage and coupling issue. The cell isolation includes a combination of buffered and resistive options. Firmware configuration allows seamless auto-transition between the two sensing schemes. The battery sensing buffer is powered from the PACK pin.

For accurate battery voltage sensing when using the sensing buffer, the PACK pin must be powered and VPACK > VBAT + 0.7 V. The sensing protection thresholds (BCP, BCN, BDP, and BDN) provide short detection for the battery sensing output pins, and places the battery sensing output pins in a high impedance state when triggered. The BQ27Z758 battery sensing has firmware programmable offset options for applications where differential output voltage needs to be shifted to overcome an input range limitation. The offset voltage selected should never exceed the sensing protection thresholds, because this causes false battery sensing faults.

Copyright © 2025 Texas Instruments Incorporated

6.3.15 Gas Gauging

This device uses the Impedance Track™ technology to measure and determine the available charge in battery cells. See the *Theory and Implementation of Impedance Track Battery Fuel-Gauging Algorithm Application Report* for further details.

6.3.16 Zero Volt Charging (ZVCHG)

ZVCHG (0-V charging) is a special function that allows charging a severely depleted battery that is below the FET driver charge pump shutdown voltage (V_{FET_SHUT}). The BQ27Z758 has ZVCHG enabled with no inhibit. This means a severely depleted battery with a voltage as low as 0 V can be charged. If $V_{BAT} < V_{FET_SHUT}$ and the charger voltage at PACK+ is > V_{0CHGR}, then the CHG output will be driven to the voltage of the PACK pin, allowing charging. ZVCHG mode in the BQ27Z758 is exited when $V_{BAT} > V_{FET_SHUT_REL}$, at which point the charge pump is enabled, and CHG transitions to being driven by the charge pump.

CAUTION

Some battery providers do not recommend charging a depleted (self-discharged) battery. Consult the battery supplier to determine whether to have the ZVCHG battery charger function.

For safety purposes, the BQ27Z758 is specifically designed to be used in battery systems with at least 1 additional protector unit with an inhibitied zero volt charging feature. This prevents unwanted battery self-discharge to severely low voltage levels or initiating charging at very low battery voltages that can cause irreversible damage to the battery.

6.3.17 Charge Control Features

This device supports charge control features, such as:

- Reports charging voltage and charging current based on the active temperature range—JEITA temperature ranges T1, T2, T3, T4, T5, and T6
- Provides more complex charging profiles, including sub-ranges within a standard temperature range
- Reports the appropriate charging current required for constant current charging, and the appropriate charging voltage needed for constant voltage charging to a smart charger, using the bus communication interface
- Selects the chemical state-of-charge of each battery cell using the Impedance Track method
- Provides pre-charging/zero-volt charging
- Employs charge inhibit and charge suspend if battery pack temperature is out of programmed range
- Activates charge and discharge alarms to report charging faults and to indicate charge status

6.3.18 Authentication

This device supports security with the following features, which can be enabled if desired:

- Authentication by the host using the SHA-256 method
- The gas gauge requires SHA-256 authentication before the device can be unsealed or allow full access.

6.4 Device Functional Modes

This device supports five modes, but the current consumption varies, based on firmware control of certain functions and modes of operation:

- NORMAL mode: In this mode, the device performs measurements, calculations, protections, and data updates every 250-ms intervals. Between these intervals, the device operates in a reduced power state to minimize total average current consumption. Battery protections are continuously monitored and both protection NFETs are typically on.
- SLEEP mode: In this mode, the device performs measurements, calculations, and data updates in adjustable time intervals. Between these intervals, the device operates in a reduced power stage to minimize total average current consumption. Battery protections are continuously monitored and both protection NFETs are typically on.
- SHIP mode: In this mode, the device measures voltage and temperature very infrequently and at shorter ADC conversion times, and current is not measured or coulomb counted. Current is assumed to be, and

Copyright © 2025 Texas Instruments Incorporated

reported as, 0 mA. Therefore, the device tracks the battery's state-of-charge from OCVs. The measurements performed each interval arecell voltage, temperature, and PACK voltage (every fourth interval). Processing is minimized by reducing the number of calculations. Some calculations are performed less frequently: only after voltage and temperature are measured. These less frequent calculations include updating firmware-based protections, lifetime data, and the voltage and temperature ranges of the advanced charge algorithm. Other calculations, such as updating *RemainingCapacity()* and *FullChargeCapacity()*, are not performed at all with the assumption the system is off and will not communicate with the gauge. Battery protections are continuously monitored and both protection NFETs remain on, typically.

- SHELF mode: In this mode, power consumption is reduced even further from SHIP mode by turning off the CHG and DSG NFETs and all hardware-based protections. Due to this, no external power is available to the system in SHELF mode. The device measures voltage and temperature very infrequently and at shorter ADC conversion times, and current is not measured or coulomb counted. Current is assumed to be, and reported as, 0 mA. Therefore, the device tracks the battery's state-of-charge from voltage measurements. The measurements performed each interval arecell voltage, temperature and PACK voltage (every fourth interval). Processing is minimized by reducing the number of calculations. Some calculations are performed less frequently: only after voltage and temperature are measured. These less frequent calculations include updating firmware-based protections, lifetime data, and the voltage and temperature ranges of the advanced charge algorithm. Other calculations, such as updating *RemainingCapacity()* and *FullChargeCapacity()*, are not performed at all with the assumption the system is off and will not communicate with the gauge.
- SHUTDOWN mode: In this mode, the device is completely disabled to minimize power consumption and to avoid depleting the battery.

6.4.1 Lifetime Logging Features

The device supports data logging of several key parameters for warranty and analysis:

- Maximum and minimum cell temperature
- Maximum current in CHARGE or DISCHARGE mode
- Maximum and minimum cell voltages
- Safety events and number of occurrences

6.4.2 Configuration

The device supports accurate data measurements and data logging of several key parameters.

6.4.2.1 Coulomb Counting

The device uses an integrating delta-sigma analog-to-digital converter (ADC) for current measurement. The ADC measures charge/discharge flow of the battery by measuring the voltage across a very small external sense resistor. The integrating ADC measures a bipolar signal from a range of –100 mV to 100 mV, with a positive value when $V_{(SRP)} – V_{(SRN)}$, indicating charge current and a negative value indicating discharge current.

The current measurement is performed by measuring the voltage drop across the external sense resistor, which can be as low as 1 mΩ, and the polarity of the differential voltage determines if the cell is in the CHARGE or DISCHARGE mode.

6.4.2.2 Cell Voltage Measurements

The BQ27Z758 gas gauge measures the cell voltage at 1-s intervals using the ADC. This measured value is internally scaled for the ADC and is calibrated to reduce any errors due to offsets. This data is also used for calculating the impedance of the cell for Impedance Track gas gauging.

6.4.2.3 Auto Calibration

The auto-calibration feature helps to cancel any voltage offset across the SRP and SRN pins for accurate measurement of the cell voltage, charge/discharge current, and thermistor temperature. The auto-calibration is performed when there is no communication activity for a minimum of 5 s on the bus lines.

Copyright © 2025 Texas Instruments Incorporated

6.4.2.4 Temperature Measurements

This device has an internal sensor for on-die temperature measurements, and the ability to support an external temperature measurement through the external NTC on the TS pin. These two measurements are individually enabled and configured.

7 Applications and Implementation

Note

Information in the following applications sections is not part of the TI component specification, and TI does not warrant its accuracy or completeness. TI's customers are responsible for determining suitability of components for their purposes. Customers should validate and test their design implementation to confirm system functionality.

7.1 Application Information

The BQ27Z758 can be used with a 1-series Li-ion/Li polymer battery pack. To implement and design a comprehensive set of parameters for a specific battery pack, the user needs Battery Management Studio (BQStudio), which is a graphical user-interface tool installed on a PC during development. The firmware installed in the product has default values, which are summarized in the associated *BQ27Z746-R1 and BQ27Z758 Technical Reference Manual*. Using the BQStudio tool, these default values can be changed to cater to specific application requirements during development once the system parameters, such as enable or disable certain features for operation, cell configuration, chemistry that best matches the cell used, and more. The final flash image, which is extracted once configuration and testing are complete, is used for mass production and is referred to as the "golden image."

7.2 Typical Applications

The following are example BQ27Z758 application schematics for a single-cell battery pack.

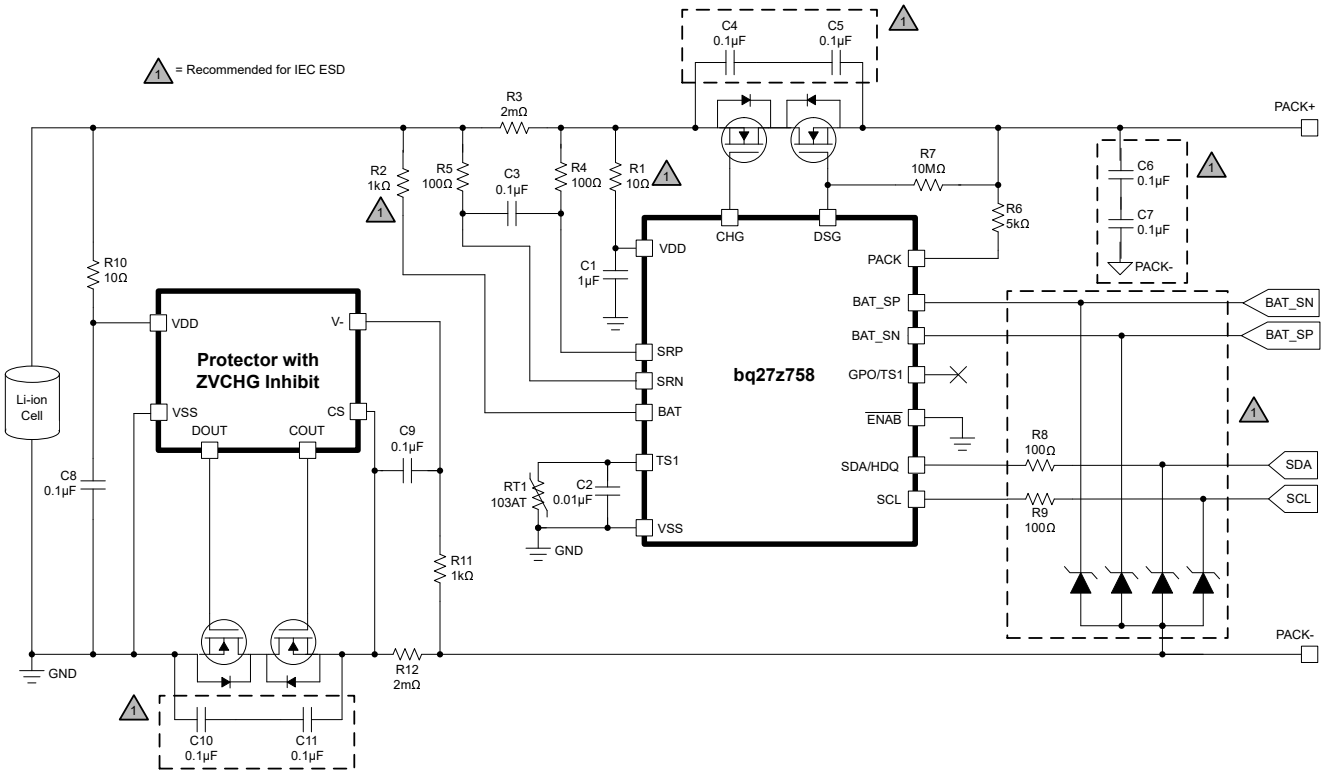

Figure 7-1. BQ27Z758 1-Series Cell High Side Current Sensing with Additional Protector Typical Implementation (Recommended)

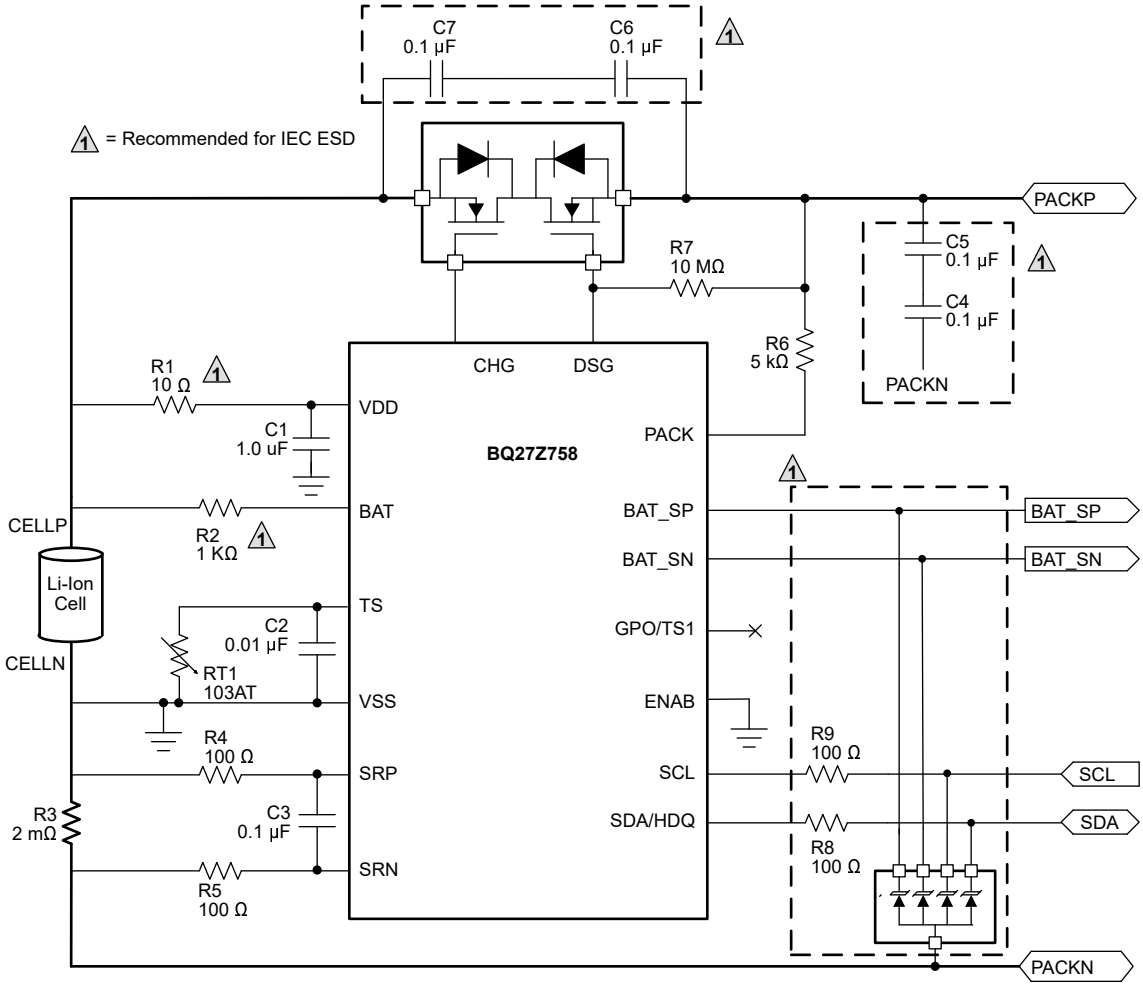

Figure 7-2. BQ27Z758 1-Series Cell Low Side Current Sensing Typical Implementation

Copyright © 2025 Texas Instruments Incorporated

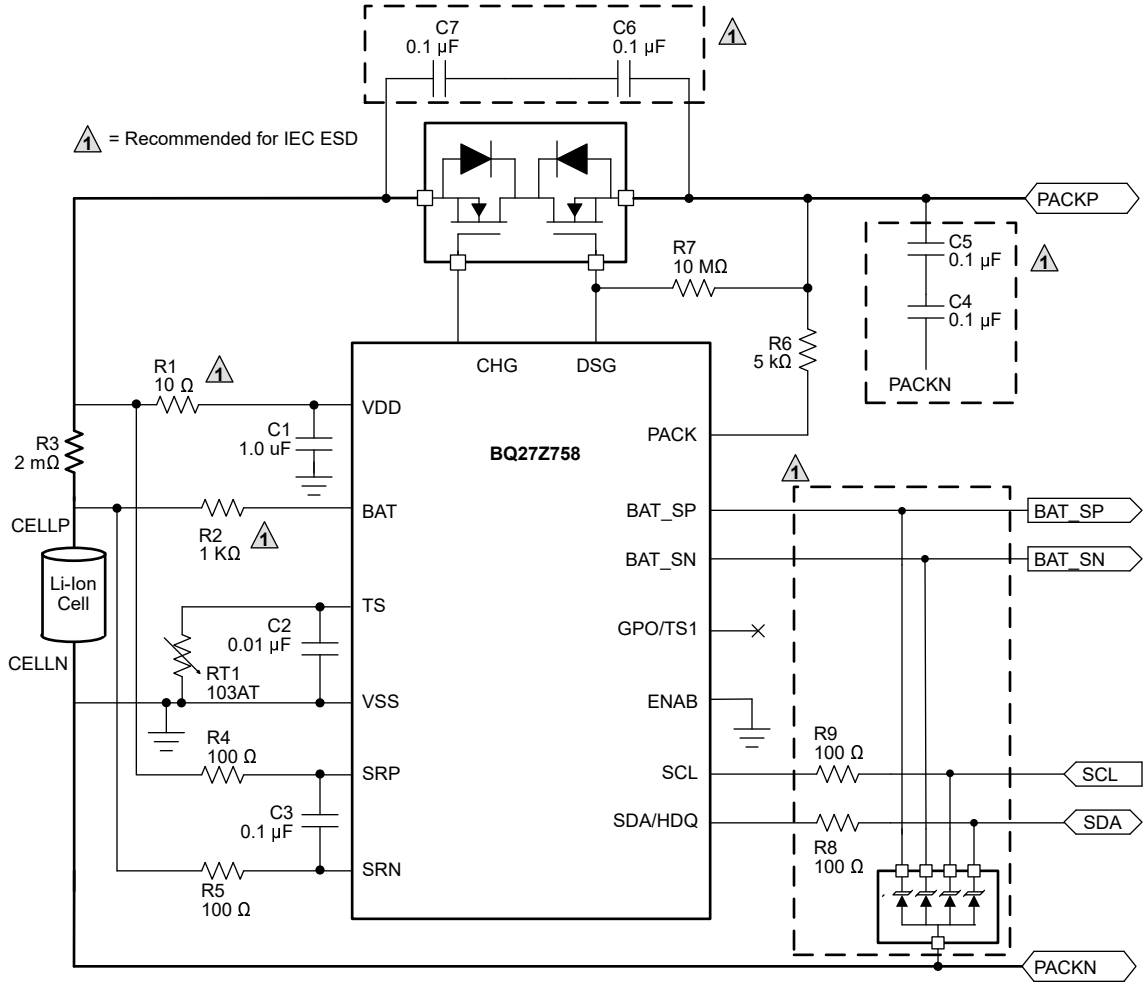

Figure 7-3. BQ27Z758 1-Series Cell High Side Current Sensing Typical Implementation

7.2.1 Design Requirements (Default)

Design Parameter	Example
Cell Configuration	1s1p (1 series with 1 parallel)
Design Capacity	5300 mAh
Device Chemistry	Li-Ion
Design Voltage	4000 mV
Cell Low Voltage	2500 mV

7.2.2 Detailed Design Procedure

7.2.2.1 Changing Design Parameters

For the firmware settings needed for the design requirements, refer to the *BQ27Z746 Technical Reference Manual*.

- To change design capacity, set the data flash value (in mAh) in the ***Gas Gauging: Design: Design Capacity*** register.
- To set device chemistry, go to the data flash ***I²C Configuration: Data: Device Chemistry*** . The BQStudio software automatically populates the correct chemistry identification. This selection is derived from using the BQCHEM feature in the tools and choosing the option that matches the device chemistry from the list.
- To set the design voltage, go to ***Gas Gauging: Design: Design Voltage*** register.

- To set the cell ***Low Voltage*** or clear the cell ***Low Voltage*** , use ***Settings: Configuration: Init Voltage Low Set*** or ***Clear*** . This is used to set the cell voltage level that will set (clear) the *[VOLT_LO]* bit in the *Interrupt Status* register.
- To enable the internal temperature and the external temperature sensors: Set ***Settings:Configuration: Temperature Enable*** : Bit 0 (TSInt) = 1 for the internal sensor; set Bit 1 (TS1) = 1 for the external sensor.

7.2.3 Calibration Process

The calibration of current, voltage, and temperature readings is accessible by writing 0xF081 or 0xF082 to *ManufacturerAccess()*. A detailed procedure is included in the *BQ27Z746-R1 and BQ27Z758 Technical Reference Manual* in the *Calibration* section. The description allows for calibration of cell voltage measurement offset, battery voltage, current calibration, coulomb counter offset, PCB offset, CC gain/capacity gain, and temperature measurement for both internal and external sensors.

7.2.4 Gauging Data Updates

When a battery pack enabled with the BQ27Z758 gas gauge is cycled, the value of *FullChargeCapacity()* updates several times, including the onset of charge or discharge, charge termination, temperature delta, resistance updates during discharge, and relaxation. Figure 7-4 shows actual battery voltage, load current, and *FullChargeCapacity()* when some of those updates occur during a single application cycle.

Update points from the plot include:

- Charge termination at 7900 s
- Relaxation at 9900 s
- Resistance update at 11500 s

7.2.4.1 Application Curve

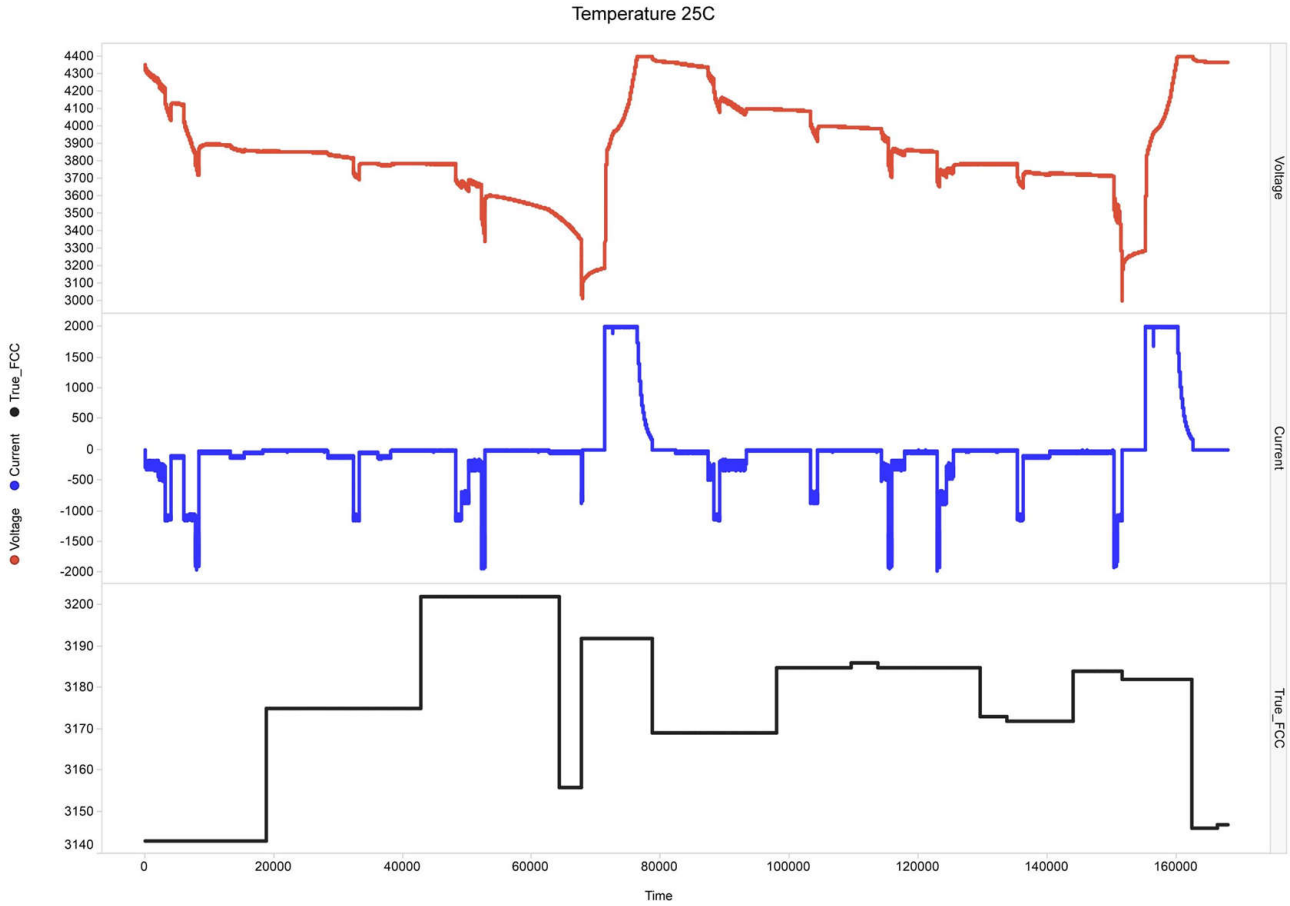

Figure 7-4. Full Charge Capacity Tracking (X-Axis Is Seconds)

Copyright © 2025 Texas Instruments Incorporated

8 Power Supply Requirements

The BQ27Z758 device uses the VDD pin as its power source. VDD pin powers the internal voltage sources that supply references for the device. The VDD pin connects to 1-series battery cells' positive terminal and supports a minimum of 2 V to a maximum of 5 V. The BAT pin is a noncurrent carrying path and is used as a battery voltage Kelvin sense connection to the 1-series battery cells' positive terminal.

9 Layout

9.1 Layout Guidelines

- The quality of the Kelvin connections at the sense resistor is critical. The sense resistor must have a temperature coefficient no greater than 50 ppm to minimize current measurement drift with temperature. Choose the value of the sense resistor to correspond to the available overcurrent and short-circuit ranges of the BQ27Z758 gas gauge. Select the smallest value possible to minimize thermal dissipation and still maintain required measurement accuracy. The value of the sense resistor impacts the differential voltage generated across the BQ27Z758 SRP and SRN nodes during a short circuit. These pins have a differential voltage shouldnot exceed V_{CC_IN} of ± 0.1V for normal operation. Parallel sense resistors can be used as long as good Kelvin sensing is maintained. The device is designed to support a 1-mΩ to 20-mΩ sense resistor.
- BAT should be tied directly to the positive connection of the battery with a series 1-kΩ resistor. It should not share a path with the VDD pin and its 10-Ω series resistor.
- In reference to the gas gauge circuit, the following features require attention for component placement and layout: VDD bypass capacitor, SRN and SRP differential low-pass filter, and I^2C communication ESD external protection.
- The BQ27Z758 gas gauge uses an integrating delta-sigma ADC for current measurements. Add a 100-Ω resistor from the sense resistor to the SRP and SRN inputs of the device. Place a 0.1-µF filter capacitor across the SRP and SRN inputs. Place all filter components as close as possible to the device. Route the traces from the sense resistor as differential pairs to the filter circuit. Adding a ground plane around the filter network can provide additional noise immunity.
- The BQ27Z758 has an internal LDO that is internally compensated and does not require an external decoupling capacitor.
- The I^2C clock and data pins have integrated high-voltage ESD protection circuits; however, adding a Zener diode and series resistor provides more robust ESD performance. The I^2C clock and data lines have an internal pulldown. When the gas gauge senses that both lines are low (such as during removal of the pack), the device performs auto-offset calibration and then goes into SLEEP mode to conserve power.

Copyright © 2025 Texas Instruments Incorporated

9.2 Layout Example

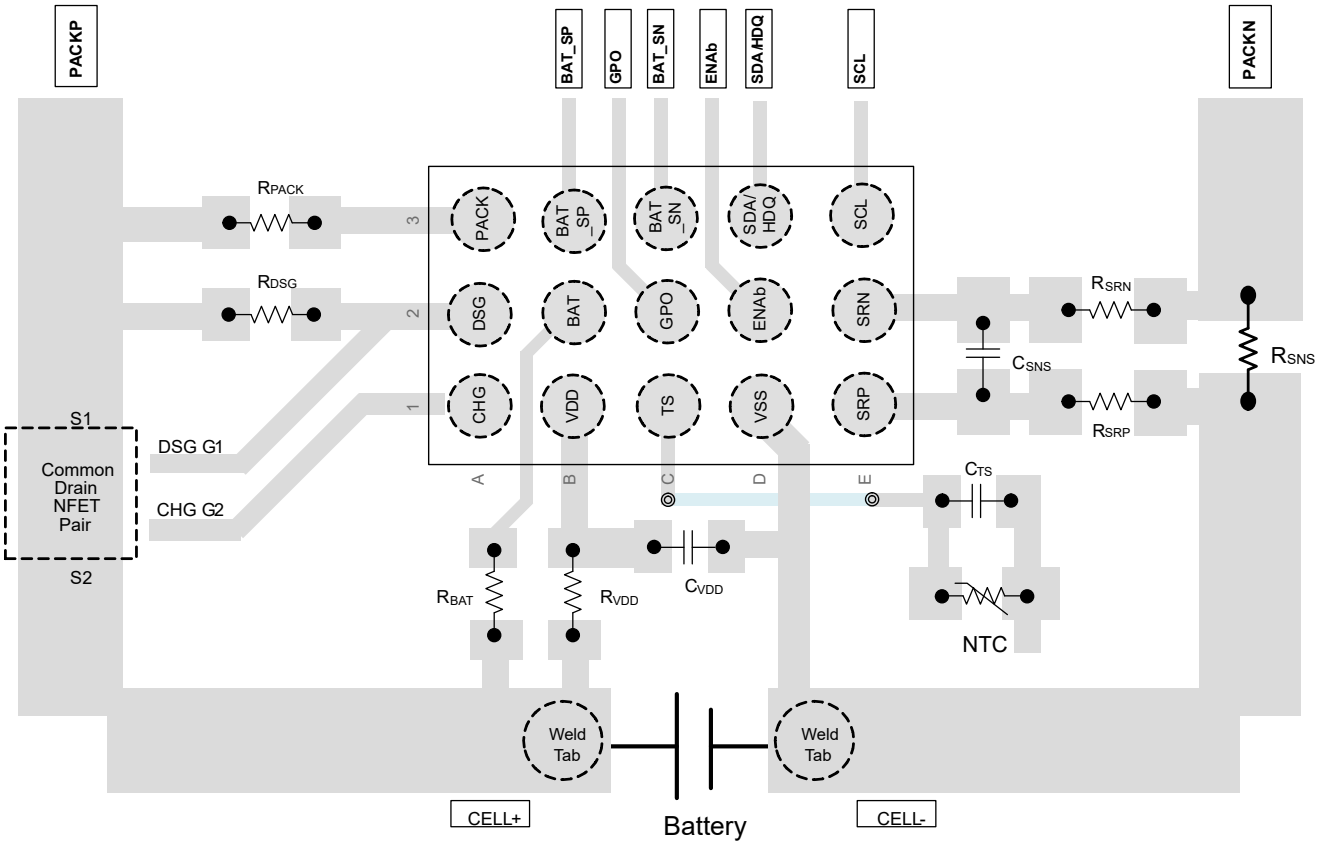

Figure 9-1. BQ27Z758 Key Trace Board Layout

Copyright © 2025 Texas Instruments Incorporated

10 Device and Documentation Support

10.1 Third-Party Products Disclaimer

TI'S PUBLICATION OF INFORMATION REGARDING THIRD-PARTY PRODUCTS OR SERVICES DOES NOT CONSTITUTE AN ENDORSEMENT REGARDING THE SUITABILITY OF SUCH PRODUCTS OR SERVICES OR A WARRANTY, REPRESENTATION OR ENDORSEMENT OF SUCH PRODUCTS OR SERVICES, EITHER ALONE OR IN COMBINATION WITH ANY TI PRODUCT OR SERVICE.

10.2 Documentation Support

10.2.1 Related Documentation

- Texas Instruments, *BQ27Z746-R1 and BQ27Z758 Technical Reference Manual*
- Texas Instruments, *Theory and Implementation of Impedance Track Battery Fuel-Gauging Algorithm Application Report*

10.3 Receiving Notification of Documentation Updates

To receive notification of documentation updates, navigate to the device product folder on ti.com. Click on *Notifications* to register and receive a weekly digest of any product information that has changed. For change details, review the revision history included in any revised document.

10.4 Support Resources

TI E2E™ support forums are an engineer's go-to source for fast, verified answers and design help — straight from the experts. Search existing answers or ask your own question to get the quick design help you need.

Linked content is provided "AS IS" by the respective contributors. They do not constitute TI specifications and do not necessarily reflect TI's views; see TI's Terms of Use.

10.5 Trademarks

Impedance Track™, NanoFree™, and TI E2E™ are trademarks of Texas Instruments.
All trademarks are the property of their respective owners.

10.6 Electrostatic Discharge Caution

This integrated circuit can be damaged by ESD. Texas Instruments recommends that all integrated circuits be handled with appropriate precautions. Failure to observe proper handling and installation procedures can cause damage.

ESD damage can range from subtle performance degradation to complete device failure. Precision integrated circuits may be more susceptible to damage because very small parametric changes could cause the device not to meet its published specifications.

10.7 Glossary

TI Glossary	This glossary lists and explains terms, acronyms, and definitions.

11 Revision History

NOTE: Page numbers for previous revisions may differ from page numbers in the current version.

Changes from Revision A (May 2025) to Revision B (May 2025) **Page**

- Added "...100KHz I2C clock frequency" sentence.....19

Changes from Revision * (November 2024) to Revision A (May 2025) **Page**

- Updated body size in the Package Information table from 1.7mm x 2.6mm to 1.69mm x 2.57mm..... 1
- Updated minimum VOCC threshold from 1 to 4.....7
- Corrected typo in tOCC and tOCD rows.....7

DATE	REVISION	NOTES
November 2024	*	Initial Release

12 Mechanical, Orderable, and Packaging Information

The following pages include mechanical, orderable, and packaging information. This information is the most current data available for the designated devices. This data is subject to change without notice and revision of this document. For browser-based versions of this data sheet, refer to the left-hand navigation.

Copyright © 2025 Texas Instruments Incorporated

PACKAGING INFORMATION

Orderable part number	Status (1)	Material type (2)	Package | Pins	Package qty | Carrier	RoHS (3)	Lead finish/ Ball material (4)	MSL rating/ Peak reflow (5)	Op temp (°C)	Part marking (6)
BQ27Z758YAHR	Active	Production	DSBGA (YAH) | 15	3000 | LARGE T&R	Yes	SAC396	Level-1-260C-UNLIM	-40 to 85	BQ27Z758
BQ27Z758YAHR.A	Active	Production	DSBGA (YAH) | 15	3000 | LARGE T&R	Yes	SAC396	Level-1-260C-UNLIM	See BQ27Z758YAHR	BQ27Z758

(1) **Status:** For more details on status, see our product life cycle.

(2) **Material type:** When designated, preproduction parts are prototypes/experimental devices, and are not yet approved or released for full production. Testing and final process, including without limitation quality assurance, reliability performance testing, and/or process qualification, may not yet be complete, and this item is subject to further changes or possible discontinuation. If available for ordering, purchases will be subject to an additional waiver at checkout, and are intended for early internal evaluation purposes only. These items are sold without warranties of any kind.

(3) **RoHS values:** Yes, No, RoHS Exempt. See the TI RoHS Statement for additional information and value definition.

(4) **Lead finish/Ball material:** Parts may have multiple material finish options. Finish options are separated by a vertical ruled line. Lead finish/Ball material values may wrap to two lines if the finish value exceeds the maximum column width.

(5) **MSL rating/Peak reflow:** The moisture sensitivity level ratings and peak solder (reflow) temperatures. In the event that a part has multiple moisture sensitivity ratings, only the lowest level per JEDEC standards is shown. Refer to the shipping label for the actual reflow temperature that will be used to mount the part to the printed circuit board.

(6) **Part marking:** There may be an additional marking, which relates to the logo, the lot trace code information, or the environmental category of the part.

Multiple part markings will be inside parentheses. Only one part marking contained in parentheses and separated by a "~" will appear on a part. If a line is indented then it is a continuation of the previous line and the two combined represent the entire part marking for that device.

Important Information and Disclaimer: The information provided on this page represents TI's knowledge and belief as of the date that it is provided. TI bases its knowledge and belief on information provided by third parties, and makes no representation or warranty as to the accuracy of such information. Efforts are underway to better integrate information from third parties. TI has taken and continues to take reasonable steps to provide representative and accurate information but may not have conducted destructive testing or chemical analysis on incoming materials and chemicals. TI and TI suppliers consider certain information to be proprietary, and thus CAS numbers and other limited information may not be available for release.

In no event shall TI's liability arising out of such information exceed the total purchase price of the TI part(s) at issue in this document sold by TI to Customer on an annual basis.

TAPE AND REEL INFORMATION

REEL DIMENSIONS

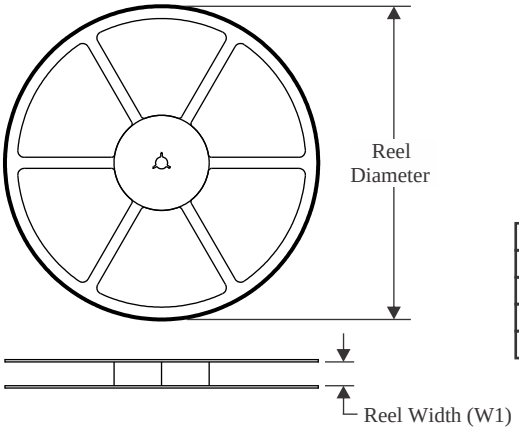

TAPE DIMENSIONS

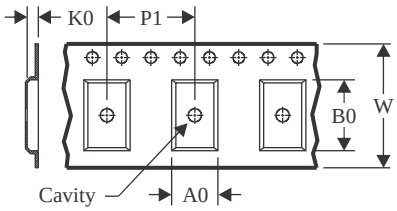

A0	Dimension designed to accommodate the component width
B0	Dimension designed to accommodate the component length
K0	Dimension designed to accommodate the component thickness
W	Overall width of the carrier tape
P1	Pitch between successive cavity centers

QUADRANT ASSIGNMENTS FOR PIN 1 ORIENTATION IN TAPE

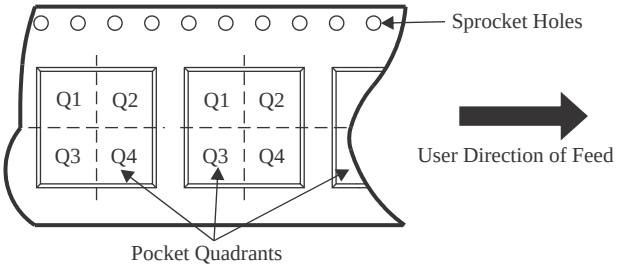

*All dimensions are nominal

Device	Package Type	Package Drawing	Pins	SPQ	Reel Diameter (mm)	Reel Width W1 (mm)	A0 (mm)	B0 (mm)	K0 (mm)	P1 (mm)	W (mm)	Pin1 Quadrant
BQ27Z758YAHR	DSBGA	YAH	15	3000	180.0	12.4	1.88	2.76	0.55	4.0	12.0	Q1

TAPE AND REEL BOX DIMENSIONS

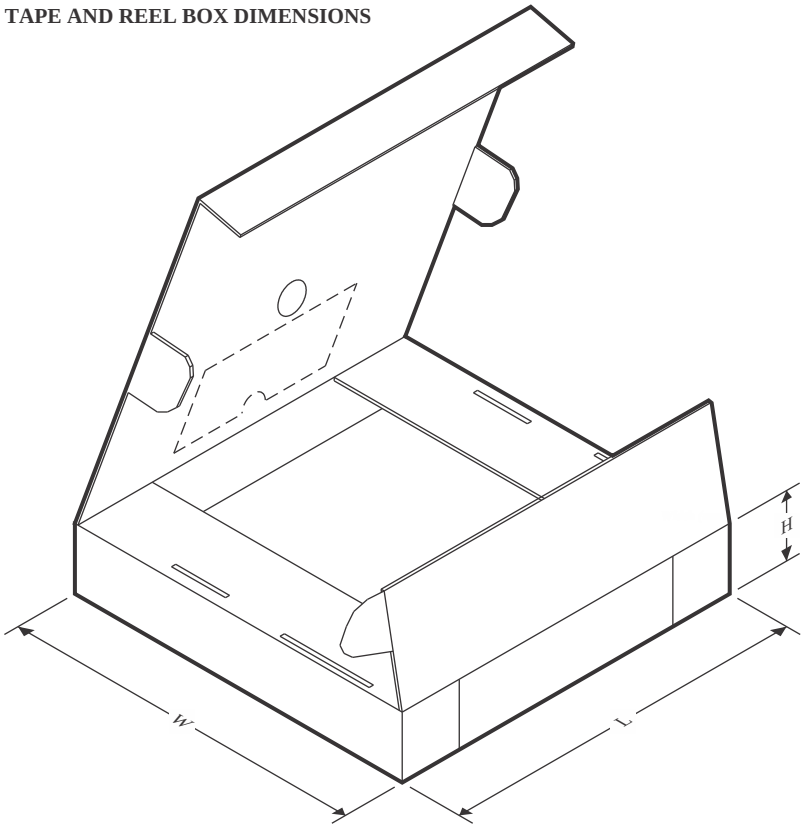

*All dimensions are nominal

Device	Package Type	Package Drawing	Pins	SPQ	Length (mm)	Width (mm)	Height (mm)
BQ27Z758YAHR	DSBGA	YAH	15	3000	182.0	182.0	20.0

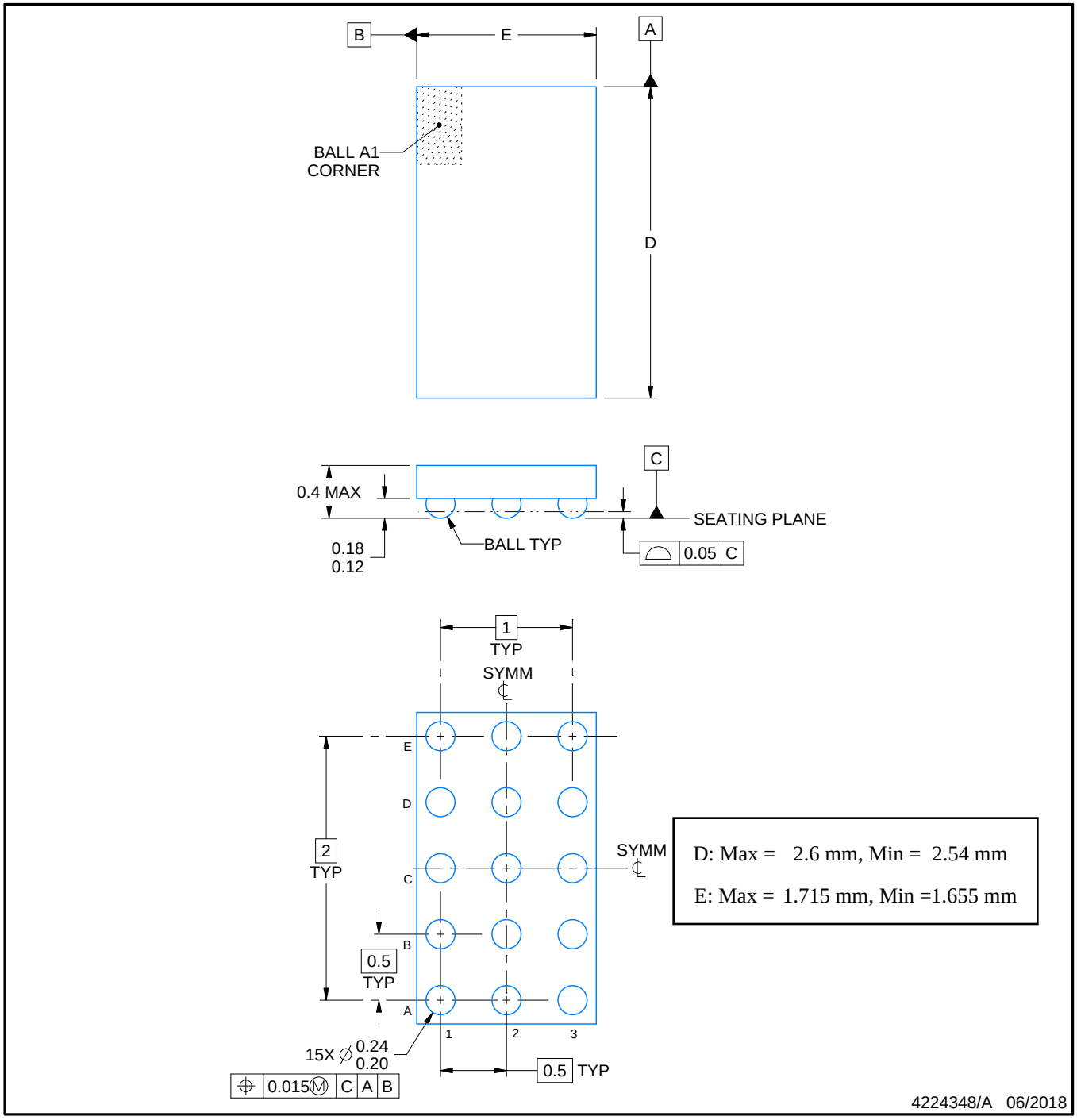

NOTES:

1. All linear dimensions are in millimeters. Any dimensions in parenthesis are for reference only. Dimensioning and tolerancing per ASME Y14.5M.
2. This drawing is subject to change without notice.

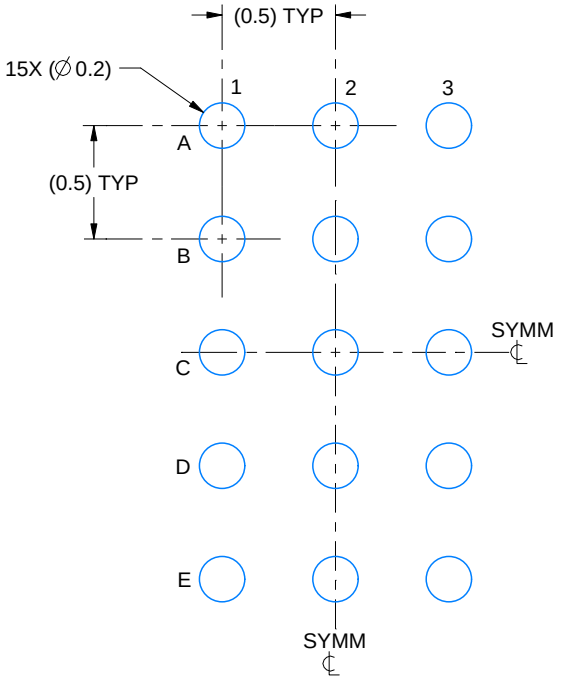

LAND PATTERN EXAMPLE
EXPOSED METAL SHOWN
SCALE: 30X

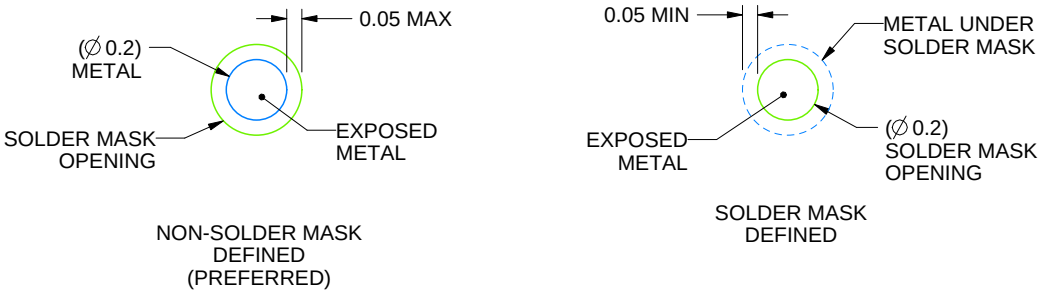

SOLDER MASK DETAILS
NOT TO SCALE

4224348/A 06/2018

NOTES: (continued)

3. Final dimensions may vary due to manufacturing tolerance considerations and also routing constraints.
   See Texas Instruments Literature No. SNVA009 (www.ti.com/lit/snva009).

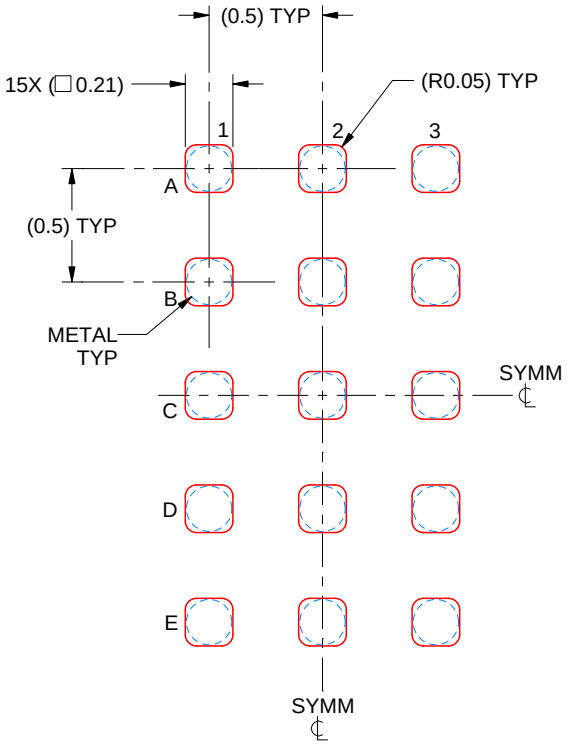

SOLDER PASTE EXAMPLE
BASED ON 0.075 mm THICK STENCIL
SCALE: 30X

4224348/A 06/2018

NOTES: (continued)

4. Laser cutting apertures with trapezoidal walls and rounded corners may offer better paste release.

IMPORTANT NOTICE AND DISCLAIMER

TI PROVIDES TECHNICAL AND RELIABILITY DATA (INCLUDING DATA SHEETS), DESIGN RESOURCES (INCLUDING REFERENCE DESIGNS), APPLICATION OR OTHER DESIGN ADVICE, WEB TOOLS, SAFETY INFORMATION, AND OTHER RESOURCES “AS IS” AND WITH ALL FAULTS, AND DISCLAIMS ALL WARRANTIES, EXPRESS AND IMPLIED, INCLUDING WITHOUT LIMITATION ANY IMPLIED WARRANTIES OF MERCHANTABILITY, FITNESS FOR A PARTICULAR PURPOSE OR NON-INFRINGEMENT OF THIRD PARTY INTELLECTUAL PROPERTY RIGHTS.

These resources are intended for skilled developers designing with TI products. You are solely responsible for (1) selecting the appropriate TI products for your application, (2) designing, validating and testing your application, and (3) ensuring your application meets applicable standards, and any other safety, security, regulatory or other requirements.

These resources are subject to change without notice. TI grants you permission to use these resources only for development of an application that uses the TI products described in the resource. Other reproduction and display of these resources is prohibited. No license is granted to any other TI intellectual property right or to any third party intellectual property right. TI disclaims responsibility for, and you will fully indemnify TI and its representatives against, any claims, damages, costs, losses, and liabilities arising out of your use of these resources.

TI’s products are provided subject to TI’s Terms of Sale or other applicable terms available either on ti.com or provided in conjunction with such TI products. TI’s provision of these resources does not expand or otherwise alter TI’s applicable warranties or warranty disclaimers for TI products.

TI objects to and rejects any additional or different terms you may have proposed.

Mailing Address: Texas Instruments, Post Office Box 655303, Dallas, Texas 75265
Copyright © 2025, Texas Instruments Incorporated