# TAS5548 8-Channel HD Compatible Audio Processor with ASRC and PWM Output

## 1 Features

- General Features
  - 8ch Asynchronous Sample Rate Converter
  - 8 Channel Audio Processing for 32-192 kHz (ARSC to 96kHz)
  - 4 Channel Native Audio Processing at 192kHZ
  - 30 kHz Audio Bandwidth for DTS-HD Compatibility
  - Energy Manager for Overall System Power Control
  - Power Supply Volume Control
- Audio Input or Output
  - Up to Five Synchronous Serial Audio Inputs (10 Channels)
  - Up to One Synchronous Serial Audio Outputs (2 Channels)
  - I2S Master Mode When Used With External Crystal
  - Slave Mode 32-192KHz With Auto/Manual Sample Rate Detection
  - Eight Differential PWM Output That can Support AD or BD Modulation
  - Two Differential PWM Headphone Outputs
  - I2S Out for External Wireless Sub
  - PWM Output Supports Single Ended (S.E.) or Bridge Tied Load (BTL)
- Audio Processing
  - Volume Control Range 18 dB to –127 dB (Master and Eight Channel Volume)
  - Bass and Treble Tone Controls With ±18-dB Range, Selectable Corner Frequencies
  - Configurable Loudness Compensation
  - Two Dynamic Range Compressors With Two Thresholds, Two Offsets, and Three Slopes
  - Seven Biquads Per Channel
- PWM Processing
  - >105-dB Dynamic Range
  - THD+N < 0.1% (0–40 kHz)
  - 20-Hz–40-kHz, Flat Noise Floor for 32KHz - 192KHz
  - Flexible Automute Logic With Programmable Threshold and Duration for Noise-Free Operation
  - Power-Supply Volume Control (PSVC) in High-Performance Applications
  - Adjustable Modulation Limit

## 2 Applications

Interface Seamlessly with Most Digital Audio Decoders

## 3 Description

The TAS5548 is an 8-channel Digital Pulse Width Modulator (PWM) with Digital Audio Processing and Sample Rate Converter that provides both advanced performance and a high level of system integration. TAS5548 is designed to support DTS-HD specification Blu-ray HTiB applications. The ASRC consists of two separate modules which handle 4 channels each. Therefore, it is possible to support up to two different input sampling rates.

Texas Instruments Power Stages are designed to work seamlessly with the TAS5548. The TAS5548 also provides a high-performance, differential output to drive an external, differential-input, analog headphone amplifier.

The TAS5548 supports AD, BD, and ternary modulation operating at a 384-kHz switching rate for 48-, 96-, and 192-kHz data. The external crystal used must be 12.288 MHz. The TAS5548 also features power-supply-volume-control (PSVC), which improves dynamic range at lower power level and can be used as part of a Class G power supply when used with closed-loop PWM input power stages.

**Device Information(1)**

| PART NUMBER | PACKAGE | BODY SIZE (NOM) |
|---|---|---|
| TAS5548 | HTSSOP (56) | 14.00 mm x 6.10 mm |

(1) For all available packages, see the orderable addendum at the end of the datasheet.

**Block Diagram**

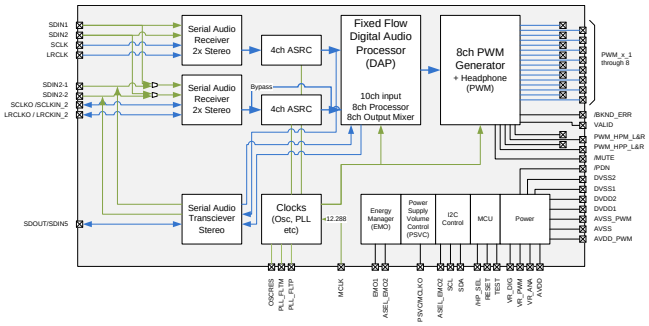


An IMPORTANT NOTICE at the end of this data sheet addresses availability, warranty, changes, use in safety-critical applications, intellectual property matters and other important disclaimers. PRODUCTION DATA.

## Table of Contents

**1 Features** ... 1
**2 Applications** ... 1
**3 Description** ... 1
**4 Revision History** ... 2
**5 Pin Configuration and Functions** ... 3
**6 Specifications** ... 6
6.1 Absolute Maximum Ratings ... 6
6.2 ESD Ratings ... 6
6.3 Recommended Operating Conditions ... 6
6.4 Thermal Information ... 6
6.5 Electrical Characteristics ... 7
6.6 Dynamic Performance ... 7
6.7 SRC Performance ... 7
6.8 Timing $I^2C$ Serial Control Port Operation ... 8
6.9 Reset Timing ($\overline{RESET}$) ... 8
6.10 Power-Down ($\overline{PDN}$) Timing ... 8
6.11 Back-End Error ($\overline{BKND_ERR}$) ... 8
6.12 Mute Timing ($\overline{MUTE}$) ... 9
6.13 Headphone Select ($\overline{HP_SEL}$) ... 9
6.14 Switching Characteristics - Clock Signals ... 9
6.15 Switching Characteristics - Serial Audio Port ... 9
6.16 Volume Control ... 10
6.17 Typical Characteristics ... 13
**7 Detailed Description** ... 14
7.1 Overview ... 14
7.2 Functional Block Diagram ... 14
7.3 Feature Description ... 16
7.4 Device Functional Modes ... 25
7.5 Programming ... 48
7.6 Register Maps ... 53
**8 Application and Implementation** ... 95
8.1 Application Information ... 95
8.2 Typical Applications ... 95
8.3 Do's and Don'ts ... 102
8.4 Initialization Set Up ... 102
**9 Power Supply Recommendations** ... 103
9.1 Power Supply ... 103
9.2 Energy Manager ... 103
9.3 Programming Energy Manager ... 104
**10 Layout** ... 105
10.1 Layout Guidelines ... 105
10.2 Layout Example ... 106
**11 Device and Documentation Support** ... 108
11.1 Documentation Support ... 108
11.2 Trademarks ... 108
11.3 Electrostatic Discharge Caution ... 108
11.4 Glossary ... 108
**12 Mechanical, Packaging, and Orderable Information** ... 108

## 4 Revision History

NOTE: Page numbers for previous revisions may differ from page numbers in the current version.

| Changes from Original (November 2012) to Revision A | Page |
|---|---|
| • Added *ESD Ratings* table, *Feature Description* section, *Device Functional Modes*, *Application and Implementation* section, *Power Supply Recommendations* section, *Layout* section, *Device and Documentation Support* section, and *Mechanical, Packaging, and Orderable Information* section. | 1 |
| • Added the Thermal Information table | 6 |
| • Updated Figure 23 | 29 |
| • Updated Figure 24 | 30 |
| • Updated Table 12 | 46 |


Copyright © 2012–2015, Texas Instruments Incorporated

# 5 Pin Configuration and Functions

**TAS5548 DCA Package**
**56-Pin HTSSOP**
**Top View**

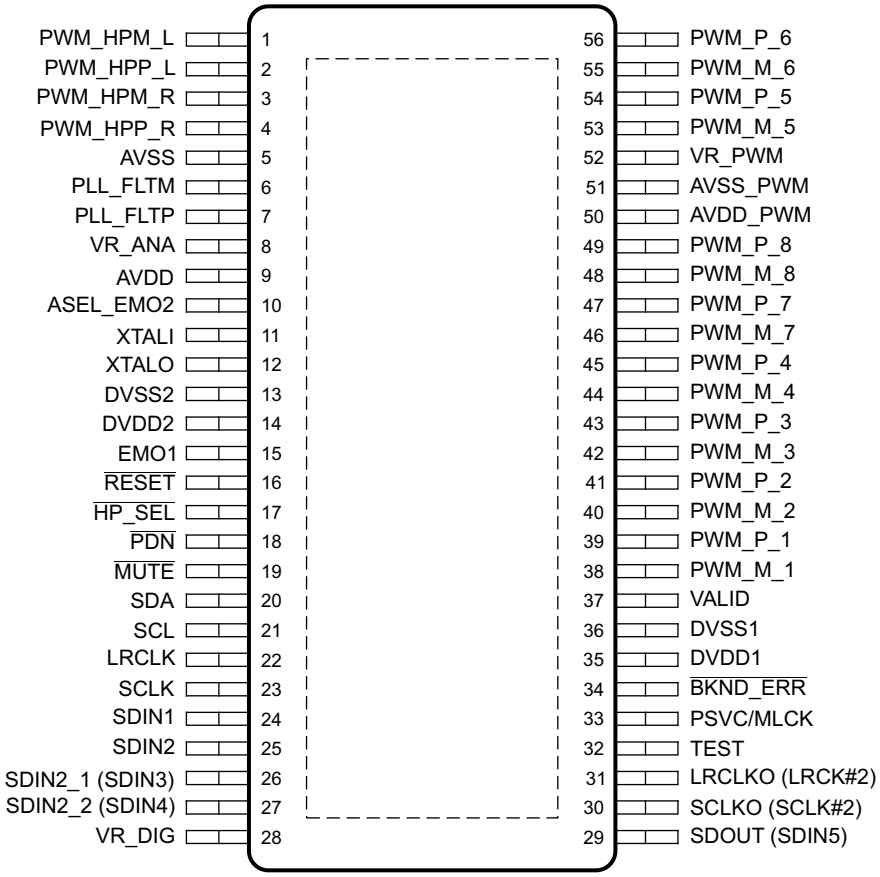


## Pin Functions

| PIN | | TYPE | 5-V TOLERANT | TERMINATION | DESCRIPTION |
|---|---|---|---|---|---|
| NAME | NO. | | | | |
| ASEL_EMO2 | 10 | DIO | | Pullup | I2C Address Select. Address will 0X34/0X36 with the value of pin being "0' or "1" during de-assertion of reset. Can be programmed to be an output (as energy manager output for subwoofer) |
| AVDD | 9 | P | | | Analog supply (3.3 V) for PLL. |
| AVDD_PWM | 50 | P | | | 3.3-V analog power supply for PWM. This terminal can be connected to the same power source used to drive power terminal DVDD; but to achieve low PLL jitter, this terminal should be bypassed to AVSS_PWM with a 0.1-µF low-ESR capacitor. |
| AVSS | 5 | P | | | Analog ground |
| AVSS_PWM | 51 | P | | | Analog ground for PWM. Must have direct return Cu path to analog 3.3V supply for optimized performance. |
| $\overline{\text{BKND_ERR}}$ | 34 | DI | | Pullup | Active-low. A back-end error sequence is generated by applying logic low to this terminal. The $\overline{\text{BKND_ERR}}$ results in no change to I2C parameters, with all H-bridge drive signals going to a hard-mute state (Non PWM Switching). |
| DVDD1 | 35 | P | | | 3.3-V digital power supply. (It is recommended that decoupling capacitors of 0.1 µF and 10 µF be mounted close to this pin). |
| DVDD2 | 14 | P | | | 3.3-V digital power supply for PWM. (It is recommended that decoupling capacitors of 0.1 µF and 10 µF be mounted close to this pin). |
| DVSS1 | 36 | P | | | Digital ground 1 |
| DVSS2 | 13 | P | | | Digital ground 2 |
| EMO1 | 15 | DO | | | Energy Manger Output interrupt - Asserted high when threshold is exceeded. |

Copyright © 2012–2015, Texas Instruments Incorporated

## Pin Functions (continued)

| PIN | | TYPE | 5-V TOLERANT | TERMINATION | DESCRIPTION |
|---|---|---|---|---|---|
| NAME | NO. | | | | |
| $\overline{\text{HP_SEL}}$ | 17 | DI | 5 V | Pullup | Headphone/speaker selector. When a logic low is applied, the headphone is selected (speakers are off). When a logic high is applied, speakers are selected (headphone is off). |
| LRCLK | 22 | DI | 5 V | Pulldown | Serial-audio data left/right clock (sampling-rate clock) |
| LRCLKO / LRCKIN_2 | 31 | DIO | 5V | Pulldown | LRCLK for I2S OUT. Can also be used as LRCKIN_2 (I2S Input for SDIN2_x and SRC Bank 2) |
| XTALI | 11 | DI | 1.8 V | | XTAL input. Connect to external 12.288 MHz XTAL |
| $\overline{\text{MUTE}}$ | 19 | DI | 5 V | Pullup | Soft mute of outputs, active-low (muted signal = a logic low, normal operation = a logic high). The mute control provides a noiseless volume ramp to silence. Releasing mute provides a noiseless ramp to previous volume. |
| XTALO | 12 | DO | | | XTAL input. Connect to external 12.288 MHz XTAL |
| $\overline{\text{PDN}}$ | 18 | DI | 5 V | Pullup | Power down, active-low. $\overline{\text{PDN}}$ powers down all logic and stops all clocks whenever a logic low is applied. The I2C parameters are preserved through a power-down cycle, as long as $\overline{\text{RESET}}$ is not active. |
| PLL_FLTM | 6 | AIO | | | PLL negative filter. |
| PLL_FLTP | 7 | AIO | | | PLL positive filter. |
| PSVC/MCLKO | 33 | DO | | | Power-supply volume control PWM output or MCKO for external ADC (SDIN5 Source) |
| PWM_HPM_L | 1 | DO | | | PWM left-channel headphone (differential –) |
| PWM_HPM_R | 3 | DO | | | PWM right-channel headphone (differential –) |
| PWM_HPP_L | 2 | DO | | | PWM left-channel headphone (differential +) |
| PWM_HPP_R | 4 | DO | | | PWM right-channel headphone (differential +) |
| PWM_M_1 | 38 | DO | | | PWM 1 output (differential –) |
| PWM_M_2 | 40 | DO | | | PWM 2 output (differential –) |
| PWM_M_3 | 42 | DO | | | PWM 3 output (differential –) |
| PWM_M_4 | 44 | DO | | | PWM 4 output (differential –) |
| PWM_M_5 | 53 | DO | | | PWM 5 output (lineout L) (differential –) |
| PWM_M_6 | 55 | DO | | | PWM 6 output (lineout R) (differential –) |
| PWM_M_7 | 46 | DO | | | PWM 7 output (differential –) |
| PWM_M_8 | 48 | DO | | | PWM 8 output (differential –) |
| PWM_P_1 | 39 | DO | | | PWM 1 output (differential +) |
| PWM_P_2 | 41 | DO | | | PWM 2 output (differential +) |
| PWM_P_3 | 43 | DO | | | PWM 3 output (differential +) |
| PWM_P_4 | 45 | DO | | | PWM 4 output (differential +) |
| PWM_P_5 | 54 | DO | | | PWM 5 output (lineout L) (differential +) |
| PWM_P_6 | 56 | DO | | | PWM 6 output (lineout R) (differential +) |
| PWM_P_7 | 47 | DO | | | PWM 7 output (differential +) |
| PWM_P_8 | 49 | DO | | | PWM 8 output (differential +) |
| $\overline{\text{RESET}}$ | 16 | DI | 5 V | Pullup | System reset input, active-low. A system reset is generated by applying a logic low to this terminal. $\overline{\text{RESET}}$ is an asynchronous control signal that restores the TAS5548 to its default conditions, sets the valid output low, and places the PWM in the hard-mute state (Non PWM Switching). Master volume is immediately set to full attenuation. On the release of $\overline{\text{RESET}}$, if $\overline{\text{PDN}}$ is high, the system performs a 4- to 5-ms device initialization and sets the volume at mute. |
| SCL | 21 | DI | 5 V | | $I^2C$ serial-control clock input/output |
| SCLK | 23 | DI | 5 V | Pulldown | Serial-audio data clock (shift clock) input |
| SCLKO / SCLKIN_2 | 30 | DIO | 5V | Pulldown | Serial data clock out. I2S bit clock out. Can also be used as SCLKIN_2 (I2S Input for SDIN2_x and SRC Bank 2) |
| SDA | 20 | DIO | 5 V | | $I^2C$ serial-control data-interface input/output |
| SDIN1 | 24 | DI | 5 V | Pulldown | Serial-audio data bank 1 input 1 is one of the serial-data input ports and goes into the 1st SRC Bank. Four discrete (stereo) data formats and is capable of inputting data at 64 $f_S$. |
| SDIN2 | 25 | DI | 5 V | Pulldown | Serial-audio data bank 1 input 2 is one of the serial-data input ports and goes into the 1st SRC Bank. Four discrete (stereo) data formats and is capable of inputting data at 64 $f_S$. |


Copyright © 2012–2015, Texas Instruments Incorporated

## Pin Functions (continued)

| PIN | | TYPE | 5-V TOLERANT | TERMINATION | DESCRIPTION |
|---|---|---|---|---|---|
| NAME | NO. | | | | |
| SDIN2-1 | 26 | DI | 5 V | Pulldown | Serial-audio data bank 2 input 1 is one of the serial-data input ports and goes into the 2nd SRC Bank. Four discrete (stereo) data formats and is capable of inputting data at 64 $f_S$. |
| SDIN2-2 | 27 | DI | 5 V | Pulldown | Serial-audio data bank 2 input 2 is one of the serial-data input ports and goes into the 2nd SRC Bank. Four discrete (stereo) data formats and is capable of inputting data at 64 $f_S$. |
| SDOUT / SDIN5 | 29 | | | | I2S data out or SDIN5 (must be sync'd to post SRC rate). Usually used for Microphone ADC Input |
| TEST | 32 | DI | | | Test mode active high. In normal mode tie this to digital ground. |
| VALID | 37 | DO | | | Output indicating validity of PWM outputs, active-high |
| VR_DIG | 28 | P | | | Voltage reference for 1.8-V digital core supply. A pinout of the internally regulated 1.8-V power used by digital core logic. A 4.7-µF low-ESR capacitor should be connected between this terminal and DVSS. This terminal must not be used to power external devices. |
| VR_PWM | 52 | P | | | Voltage reference for 1.8-V digital PLL supply. A pinout of the internally regulated 1.8-V power used by digital PLL logic. A 0.1-µF low-ESR capacitor should be connected between this terminal and DVSS_CORE. This terminal must not be used to power external devices. |
| VR_ANA | 8 | P | | | Voltage reference for 1.8-V PLL analog supply. A pinout of the internally regulated 1.8-V power used by PLL logic. A 0.1-µF low-ESR capacitor should be connected between this terminal and AVSS_PLL. This terminal must not be used to power external devices. |

Copyright © 2012–2015, Texas Instruments Incorporated

# 6 Specifications

## 6.1 Absolute Maximum Ratings[1]

| | | | MIN | MAX | UNIT |
|---|---|---|---|---|---|
| | Supply voltage, DVDD1 and DVDD2 | | –0.3 | 3.9 | V |
| | Supply voltage, AVDD and AVDD_PWM | | –0.3 | 3.9 | V |
| | Input voltage | 3.3-V digital input | –0.5 | DVDD + 0.5 | V |
| | | 5-V tolerant[2] digital input | –0.5 | 6 | |
| $I_{IK}$ | Input clamp current ($V_I$ < 0 or $V_I$ > 1.8 V | | | ±20 | μA |
| $I_{OK}$ | Output clamp current ($V_O$ < 0 or $V_O$ > 1.8 V) | | | ±20 | μA |
| $T_{STG}$ | Storage temperature range | | –65 | 150 | °C |

(1) Stresses beyond those listed under *Absolute Maximum Ratings* may cause permanent damage to the device. These are stress ratings only. Functional operation of the device at these or any other conditions beyond those indicated under *Recommended Operating Conditions* are not implied. Exposure to absolute-maximum-rated conditions for extended periods may affect device reliability.
(2) 5-V tolerant signals are $\overline{\text{RESET}}$, $\overline{\text{PDN}}$, $\overline{\text{MUTE}}$, $\overline{\text{HP_SEL}}$, SCLK, LRCLK, MCLK, SDIN1, SDIN2, SDIN3, SDIN4, SDA, and SCL.

## 6.2 ESD Ratings

| | | | VALUE | UNIT |
|---|---|---|---|---|
| $V_{(ESD)}$ | Electrostatic discharge | Human body model (HBM), per ANSI/ESDA/JEDEC JS-001, all pins [1] | ±250 | V |
| | | Charged device model (CDM), per JEDEC specification JESD22-C101, all pins [2] | ±1000 | V |

(1) JEDEC document JEP155 states that 500-V HBM allows safe manufacturing with a standard ESD control process.
(2) JEDEC document JEP157 states that 250-V CDM allows safe manufacturing with a standard ESD control process.

## 6.3 Recommended Operating Conditions

over 0°C to 85°C

| | | | MIN | NOM | MAX | UNIT |
|---|---|---|---|---|---|---|
| | Digital supply voltage, DVDD1 and DVDD2 | | 3 | 3.3 | 3.6 | V |
| | Analog supply voltage, AVDD and AVDD_PWM | | 3 | 3.3 | 3.6 | V |
| $V_{IH}$ | High-level input voltage | 3.3 V | 2 | | | V |
| | | 5-V tolerant | 2 | | | |
| | | 1.8-V LVCMOS (XTL_IN) | 1.26 | | | |
| $V_{IL}$ | Low-level input voltage | 3.3 V | | | 0.8 | V |
| | | 5-V tolerant | | | 0.8 | |
| | | 1.8-V (XTL_IN) | | | 0.54 | |
| $T_A$ | Operating ambient-air temperature | | 0 | 25 | 85 | °C |
| $T_J$ | Operating junction temperature | | 0 | | 105 | °C |

## 6.4 Thermal Information

| THERMAL METRIC[1] | | TAS5548 DCA (HTSSOP) 56 PINS | UNIT |
|---|---|---|---|
| $R_{\theta JA}$ | Junction-to-ambient thermal resistance | 26.1 | °C/W |
| $R_{\theta JCtop}$ | Junction-to-case (top) thermal resistance | 13.0 | |
| $R_{\theta JB}$ | Junction-to-board thermal resistance | 8.0 | |
| $\psi_{JT}$ | Junction-to-top characterization parameter | 0.4 | |
| $\psi_{JB}$ | Junction-to-board characterization parameter | 7.9 | |
| $R_{\theta JCbot}$ | Junction-to-case (bottom) thermal resistance | 0.4 | |

(1) For more information about traditional and new thermal metrics, see the *IC Package Thermal Metrics* application report, SPRA953.


Copyright © 2012–2015, Texas Instruments Incorporated

## 6.5 Electrical Characteristics

At recommended operating conditions - 25 °C Operating Temp, 3.3V Power Supplies with 48kHz input data unless otherwise specified

| PARAMETER | | | TEST CONDITIONS | MIN | TYP | MAX | UNIT |
|---|---|---|---|---|---|---|---|
| $V_{OH}$ | High-level output voltage | 3.3-V TTL and 5-V tolerant | $I_{OH}$ = –4 mA | 2.4 | | | V |
| | | 1.8-V LVCMOS (XTL_OUT) | $I_{OH}$ = –0.55 mA | 1.44 | | | |
| $V_{OL}$ | Low-level output voltage | 3.3-V TTL and 5-V tolerant | $I_{OL}$ = 4 mA | | | 0.5 | V |
| | | 1.8-V LVCMOS (XTL_OUT) | $I_{OL}$ = 0.75 mA | | | 0.5 | |
| $I_{OZ}$ | High-impedance output current | 3.3-V TTL | | | | ±20 | µA |
| $I_{IL}$ | Low-level input current | 3.3-V TTL | $V_I = V_{IL}$ | | | ±1 | µA |
| | | 1.8-V LVCMOS (XTL_IN) | $V_I = V_{IL}$ | | | ±1 | |
| | | 5-V tolerant(1) | $V_I$ = 0 V, DVDD = 3 V | | | ±1 | |
| $I_{IH}$ | High-level input current | 3.3-V TTL | $V_I = V_{IH}$ | | | ±1 | µA |
| | | 1.8-V LVCMOS (XTL_IN) | $V_I = V_{IH}$ | | | ±1 | |
| | | 5-V tolerant(1) | $V_I$ = 5.5 V, DVDD = 3 V | | | ±1 | |
| $I_{DD}$ | Input supply current | Digital supply voltage, DVDD | Input $f_S$ = 48 kHz | | 220 | | mA |
| | | | Power down | | 9 | | |
| | | Analog supply voltage, AVDD | Input $f_S$ = 48 kHz | | 8 | | |
| | | | Power down | | 8 | | |

(1) 5-V tolerant signals are $\overline{\text{RESET}}$, $\overline{\text{PDN}}$, $\overline{\text{MUTE}}$, $\overline{\text{HP_SEL}}$, SCLK, LRCLK, MCLK, SDIN1, SDIN2, SDIN3, SDIN4, SDA, and SCL.

## 6.6 Dynamic Performance

At recommended operating conditions at (25°C, 3.3V Power Supplies with 48kHz input data) unless otherwise noted.

| PARAMETER | TEST CONDITIONS | MIN | NOM | MAX | UNIT |
|---|---|---|---|---|---|
| Dynamic range | TAS5548 A-weighted (Test Range: 20Hz to 20kHz. $f_S$ = 96 kHz). | | 105 | | dB |
| Total harmonic distortion | TAS5548 output (1kHz at -1dBFS) | | 0.01% | | |
| Frequency response | 32-kHz to 96-kHz sample rates (Test Range 20Hz - 20kHz) | | ±0.1 | | dB |
| | 176.4, 192-kHz sample rates (Test Range 20Hz - 20kHz) | | ±0.2 | | |

## 6.7 SRC Performance

| ATTRIBUTE | VALUE |
|---|---|
| SRC Latency | 102.53125/FSin + 36.46875/FSout |
| THD+N at 1kHz | |
| Pass Band Ripple (worst case) | ±0.05dB |
| SRC Channel Gain | <1 (slightly lower to compensate for ripple) |
| Stop Band Attenuation | 130dB |
| Pass Band Edge | 0.425 FS-in |
| Stop Band Edge | 0.575 FS-in |

Copyright © 2012–2015, Texas Instruments Incorporated

## 6.8 Timing I²C Serial Control Port Operation

Timing Characteristics for I²C Interface Signals over recommended operating conditions (unless otherwise noted)

| | | STANDARD MODE | | FAST MODE | | UNIT |
|---|---|---|---|---|---|---|
| | | MIN | MAX | MIN | MAX | |
| $f_{SCL}$ | SCL clock frequency | 0 | 100 | 0 | 400 | kHz |
| $t_{HD\text{-}STA}$ | Hold time (repeated) START condition. After this period, the first clock pulse is generated. | 4 | | 0.6 | | µs |
| $t_{LOW}$ | LOW period of the SCL clock | 4.7 | | 1.3 | | µs |
| $t_{HIGH}$ | HIGH period of the SCL clock | 4 | | 0.6 | | µs |
| $t_{SU\text{-}STA}$ | Setup time for repeated START | 4.7 | | 0.6 | | µs |
| $t_{SU\text{-}DAT}$ | Data setup time | 250 | | 200 | | ns |
| $t_{HD\text{-}DAT}$ | Data hold time | 0 | 3.45 | 0 | 0.9 | µs |
| $t_r$ | Rise time of both SDA and SCL, see Figure 1 | | 1000 | 20 + 0.1 $C_b$ | 500 | ns |
| $t_f$ | Fall time of both SDA and SCL, see Figure 1 | | 300 | 20 + 0.1 $C_b$ | 300 | ns |
| $t_{SU\text{-}STO}$ | Setup time for STOP condition | 4 | | 0.6 | | µs |
| $t_{BUF}$ | Bus free time between a STOP and START condition | 4.7 | | 1.3 | | µs |
| $C_b$ | Capacitive loads for each bus line | | 400 | | 400 | pF |
| VnL | Noise margin at the LOW level for each connected device (including hysteresis) | 0.1 × $V_{DD}$ | | 0.1 × $V_{DD}$ | | V |
| $V_{nH}$ | Noise margin at the HIGH level for each connected device (including hysteresis) | 0.2 × $V_{DD}$ | | 0.2 × $V_{DD}$ | | V |

## 6.9 Reset Timing ($\overline{\text{RESET}}$)

Control signal parameters over recommended operating conditions (unless otherwise noted)

| PARAMETER | | MIN | TYP | MAX | UNIT |
|---|---|---|---|---|---|
| $t_{r(DMSTATE)}$ | Time to $\overline{\text{Non PWM Switching}}$ low | | 400 | | ns |
| $t_{w(RESET)}$ | Pulse duration, $\overline{\text{RESET}}$ active, see Figure 3 | 400 | | None | ns |
| $t_{r(I2C_ready)}$ | Time to enable I²C | | 5 | | ms |

## 6.10 Power-Down ($\overline{\text{PDN}}$) Timing

Control signal parameters over recommended operating conditions (unless otherwise noted)

| PARAMETER | | MIN | TYP | MAX | UNIT |
|---|---|---|---|---|---|
| $t_{p(DMSTATE)}$ | Time to $\overline{\text{Non PWM Switching}}$ low | | | 650 | µs |
| | Number of MCLKs preceding the release of $\overline{\text{PDN}}$, see Figure 4 | 5 | | | |
| $t_{su}$ | Device startup time | | 200 | | µs |
| | Time to audio output | | 160 | | mS |

## 6.11 Back-End Error ($\overline{\text{BKND_ERR}}$)

Control signal parameters over recommended operating conditions (unless otherwise noted)

| PARAMETER | | MIN | TYP | MAX | UNIT |
|---|---|---|---|---|---|
| $t_{w(ER)}$ | Pulse duration, $\overline{\text{BKND_ERR}}$ active, see Figure 5 | 350 | | None | ns |
| $t_{p(valid_low)}$ | Minimum amount of time that device asserts VALID low. | | | <100 | µs |
| $t_{p(valid_high)}$ | I²C programmable to be between <1mS to 1.2 seconds (to avoid glitching with persistent $\overline{\text{BKND_ERR}}$) | –25 | | 25 | % of interval |


Copyright © 2012–2015, Texas Instruments Incorporated

## 6.12 Mute Timing ($\overline{MUTE}$)

Control signal parameters over recommended operating conditions (unless otherwise noted). See Figure 6

| PARAMETER | | MIN | TYP | MAX | UNIT |
|---|---|---|---|---|---|
| $t_{d(VOL)}$ | Volume ramp time | | Defined by rate setting (1) | | ms |

(1) See *Volume, Treble, and Bass Slew Rates Register (0xD0)*.

**Note:** No I2C commands during the volume ramp up/down.

## 6.13 Headphone Select ($\overline{HP_SEL}$)

Control signal parameters over recommended operating conditions (unless otherwise noted)

| PARAMETER | | MIN | TYP | MAX | UNIT |
|---|---|---|---|---|---|
| $t_{w(\overline{HP_SEL})}$ | Pulse duration, $\overline{HP_SEL}$ active, see Figure 7 | | 165 | | ms |
| $t_{d(VOL)}$ | Soft volume update time | Defined by rate setting (1) | | | ms |
| $t_{(SW)}$ | Switchover time | | 165 | | ms |

(1) See *Volume, Treble, and Bass Slew Rates Register (0xD0)*.

## 6.14 Switching Characteristics - Clock Signals

PLL input parameters and external filter components over recommended operating conditions (unless otherwise noted)

| PARAMETER | TEST CONDITIONS | MIN | TYP | MAX | UNIT |
|---|---|---|---|---|---|
| External PLL filter capacitors | SMD 0603 X7R | | 100 | | nF |
| External PLL filter capacitors | SMD 0603 X7R | | 10 | | nF |
| External PLL filter resistors | SMD 0603, metal film, 1% | | 200 | | Ω |
| External VR_PWM decoupling C14 | SMD 0603 X7R | | 100 | | nF |
| TAS5548: XTAL Frequency | | | 12.288 | | MHz |
| TAS5548: XTAL Frequency Tolerance at 25°C | | | ±50 | | ppm |
| TAS5548: XTAL Load Capacitance | Follow XTAL Manufacturer specification | | | | |

## 6.15 Switching Characteristics - Serial Audio Port

Serial audio port slave mode over recommended operating conditions (unless otherwise noted)

| PARAMETER | | TEST CONDITIONS | MIN | TYP | MAX | UNIT |
|---|---|---|---|---|---|---|
| $f_{SCLKIN}$ | SCLK input frequency | $C_L$ = 30 pF | 2.048 | | 12.288 | MHz |
| $t_{su1}$ | Setup time, LRCLK to SCLK rising edge | | 10 | | | ns |
| $t_{h1}$ | Hold time, LRCLK from SCLK rising edge | | 10 | | | ns |
| $t_{su2}$ | Setup time, SDIN to SCLK rising edge | | 10 | | | ns |
| $t_{h2}$ | Hold time, SDIN from SCLK rising edge | | 10 | | | ns |
| | LRCLK frequency | | 32 | 48 | 192 | kHz |
| | SCLK rising edges between LRCLK rising edges | | 64 | | 64 | SCLK edges |
| | SDOUT delay with respect to SCLK output (load = 30pF), see Figure 8 | | | | 20 | ns |

Copyright © 2012–2015, Texas Instruments Incorporated

## 6.16 Volume Control

Control signal parameters over recommended operating conditions (unless otherwise noted)

| PARAMETER | TEST CONDITIONS | MIN | MAX | UNIT |
|---|---|---|---|---|
| Maximum attenuation before mute | Individual volume, master volume, or a combination of both | | –127 | dB |
| Maximum gain | Individual volume, master volume | | 18 | dB |
| Maximum volume before the onset of clipping | 0-dB input, any modulation limit | | 0 | dB |
| PSVC range | PSVC enabled | 12, 18, or 24 | | dB |
| PSVC rate | | $f_S$ | | |
| PSVC modulation | | Single sided | | |
| PSVC quantization | | 2048 | | Steps |
| PSVC PWM modulation limits | PSVC range = 24 dB | 6% (120 : 2048) | 95% (1944 : 2048) | dB |

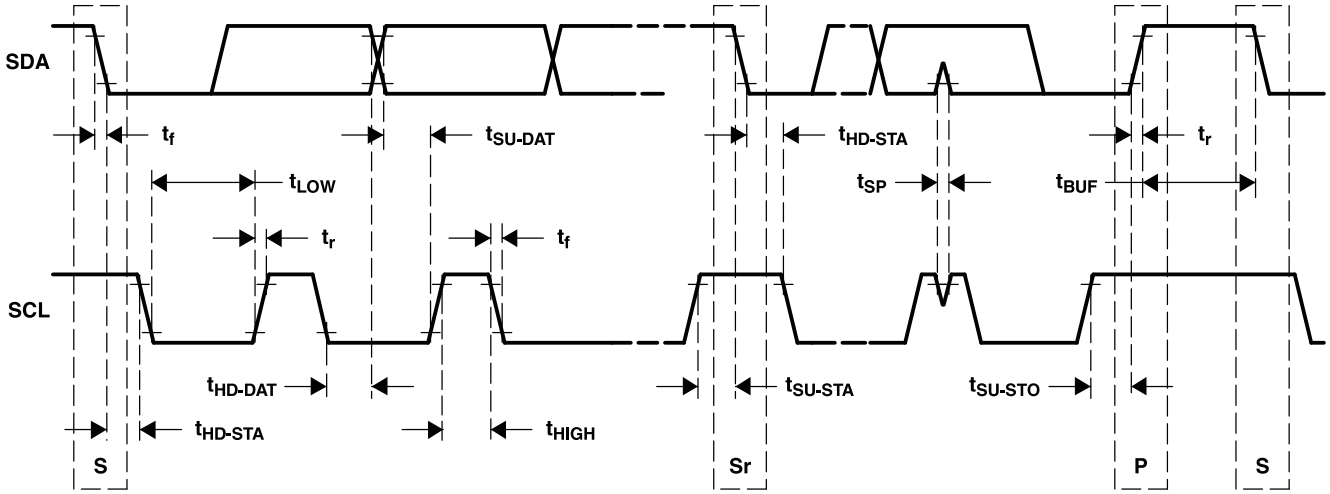


**Figure 1. SCL and SDA Timing**

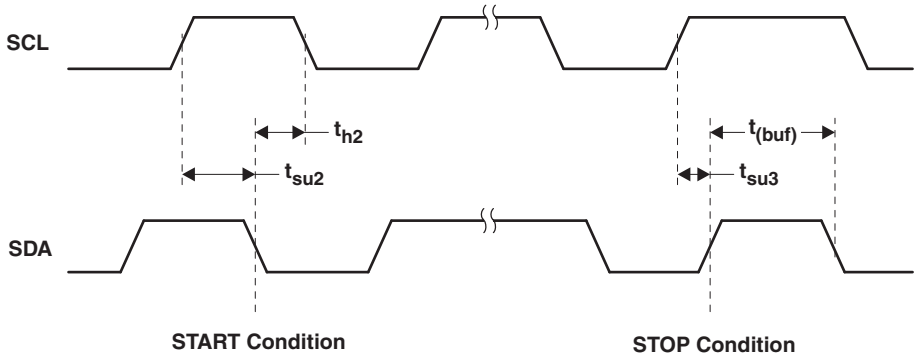


**Figure 2. START and STOP Conditions Timing**


Copyright © 2012–2015, Texas Instruments Incorporated

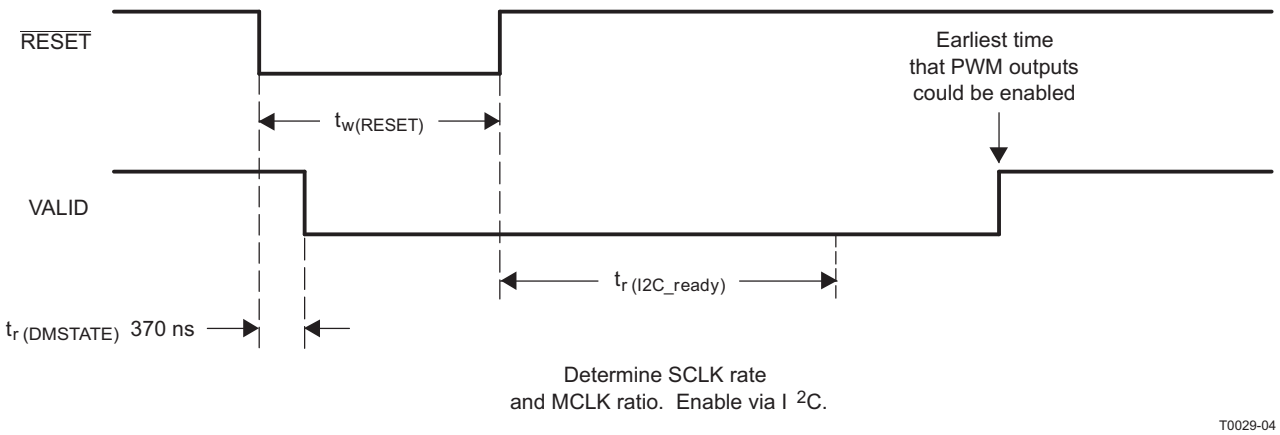


**Figure 3. Reset Timing**

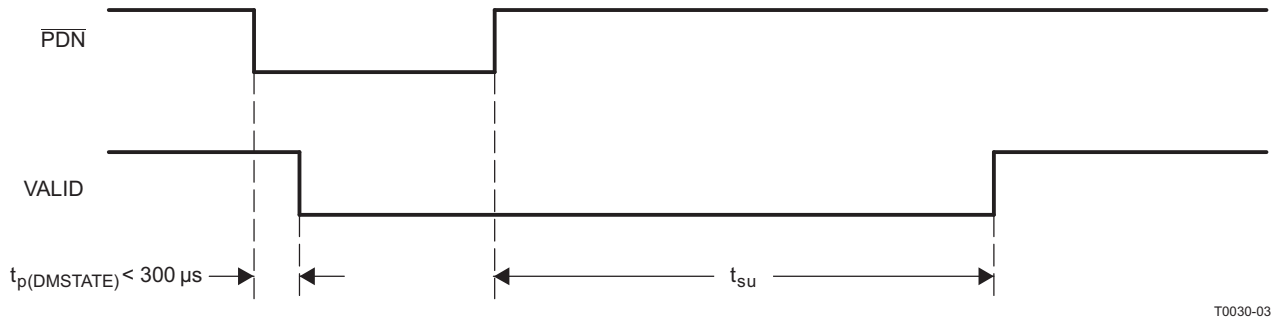


**Figure 4. Power-Down Timing**

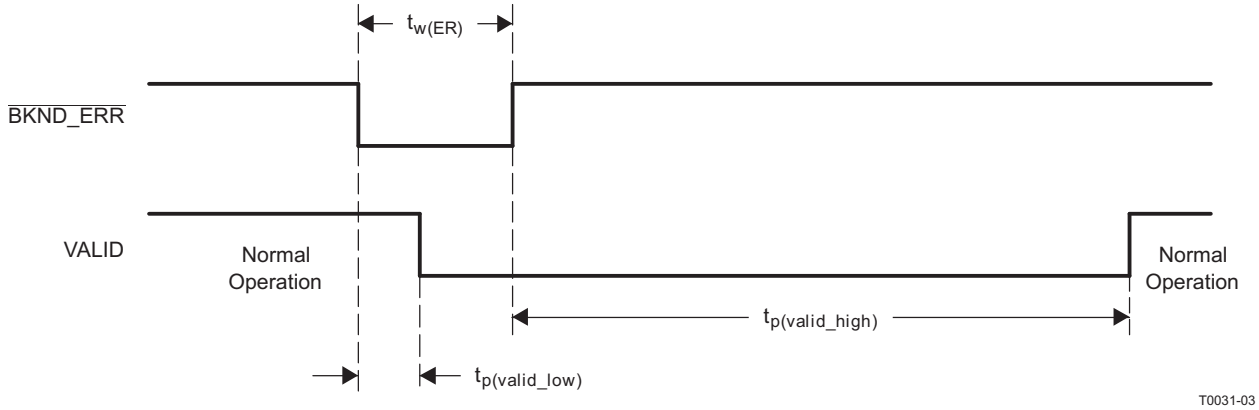


**Figure 5. Error-Recovery Timing**

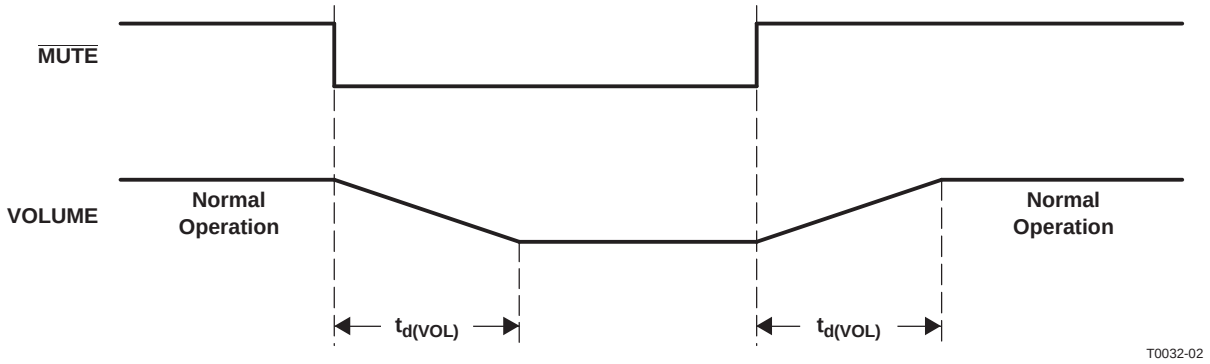


**Figure 6. Mute Timing**

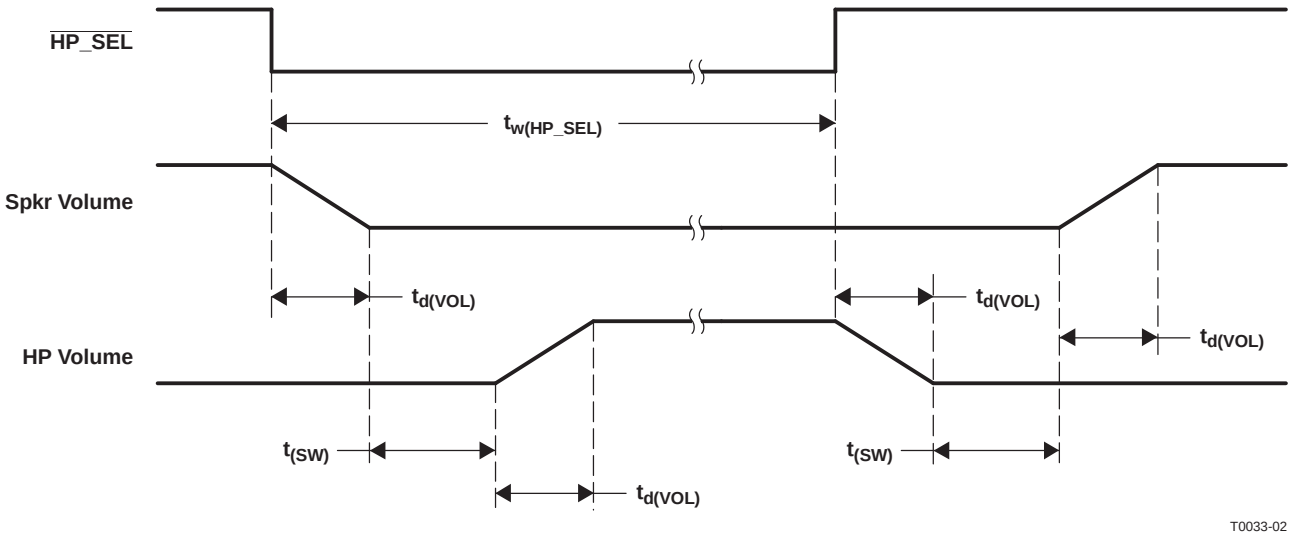


**Figure 7. $\overline{\text{HP_SEL}}$ Timing**

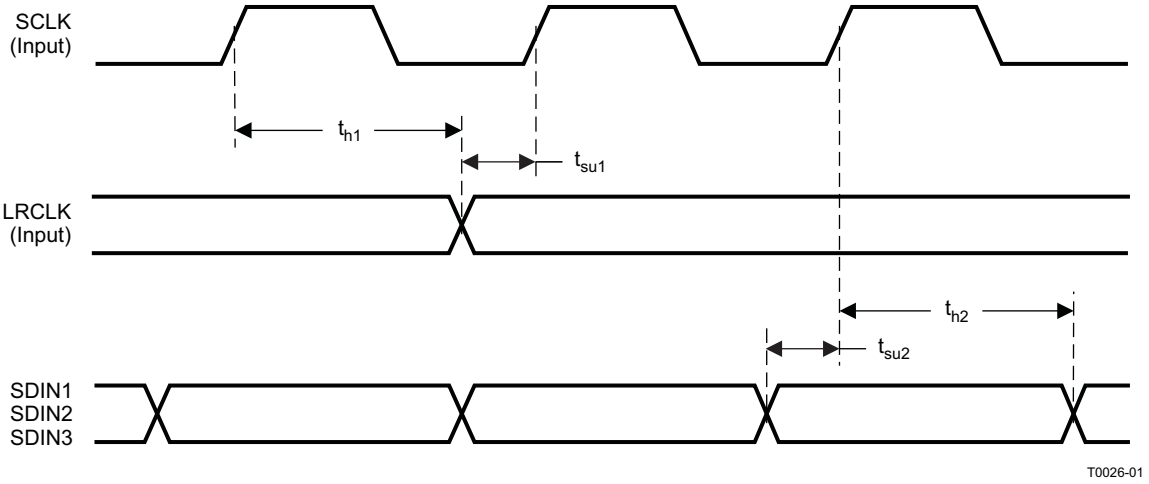


**Figure 8. Slave Mode Serial Data Interface Timing**


Copyright © 2012–2015, Texas Instruments Incorporated

## 6.17 Typical Characteristics

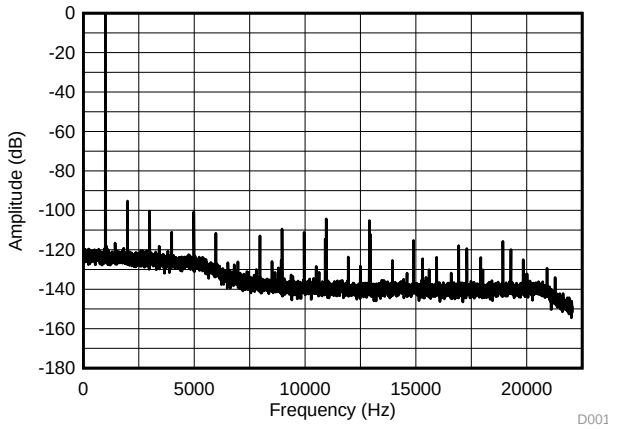


**Figure 9. Frequency Response at 48 kHz Sampling Rate with -60 dB Input at 1 kHz**

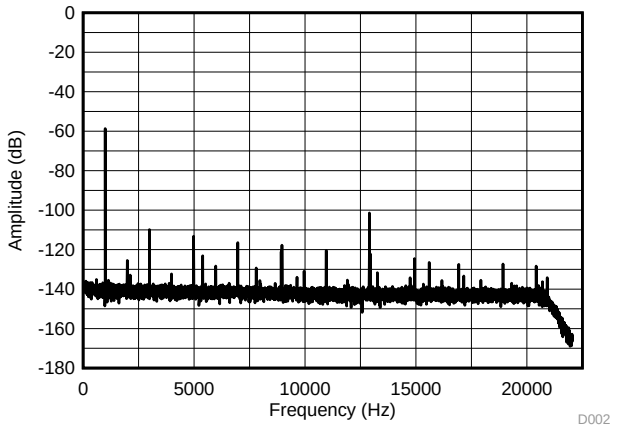


**Figure 10. Frequency Response at 48 kHz Sampling Rate with 3 dB Input at 1 kHz**

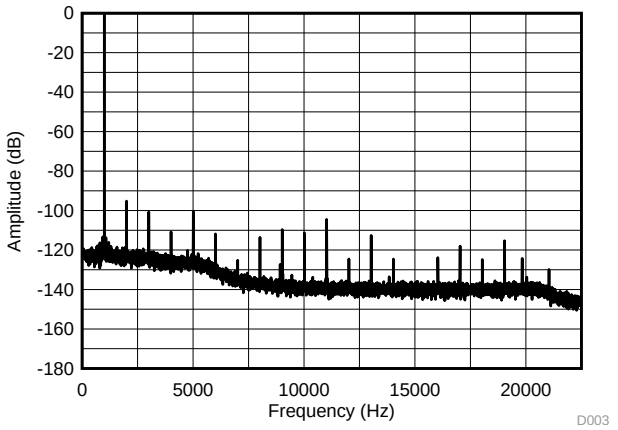


**Figure 11. Frequency Response at 44.1 kHz Sampling Rate with -60 dB Input at 1 kHz**

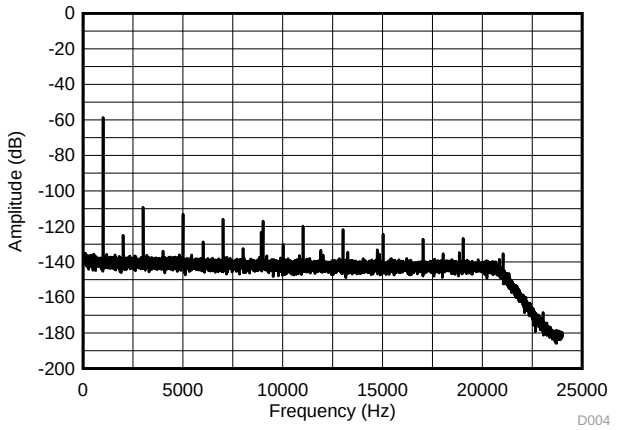


**Figure 12. Frequency Response at 44.1 kHz Sampling Rate with 3 dB Input at 1 kHz**

# 7 Detailed Description

## 7.1 Overview

The TAS5548 is an 8-channel Digital Pulse Width Modulator (PWM) with Digital Audio Processing and Sample Rate Converter that provides both advanced performance and a high level of system integration. The TAS5548 is designed to interface seamlessly with most digital audio decoders. The TAS5548 is designed to support DTS-HD specification Blu-ray HTiB applications. The ASRC consists of two separate modules which handle 4 channels each. Therefore, it is possible to support up to two different input sampling rates.

The TAS5548 can drive eight channels of H-bridge power stages. Texas Instruments Power Stages are designed to work seamlessly with the TAS5548. The TAS5548 supports either the single-ended or bridge tied-load configuration. The TAS5548 also provides a high-performance, differential output to drive an external, differential-input, analog headphone amplifier.

The TAS5548 supports AD, BD, and ternary modulation operating at a 384-kHz switching rate for 48-, 96, and 192-kHz data. The 8× oversampling combined with the fourth-order noise shaper provides a broad, flat noise floor and excellent dynamic range from 20 Hz to 32 kHz.

The TAS5548 can be both an I2S Master or I2S Slave. The external crystal drives the DAP processor, and can drive the I2S Clocks, out of the device. The TAS5548 accepts master clock rates of 64, 128, 192, 256, 384, 512, and 768 fS. The TAS5548 accepts a 64-fS bit clock. The external crystal used must be 12.288 MHz.

The TAS5548 also features power-supply-volume-control (PSVC), which improves dynamic range at lower power level and can be used as part of a Class G Power Supply when used with closed-loop PWM input power stages.

## 7.2 Functional Block Diagram

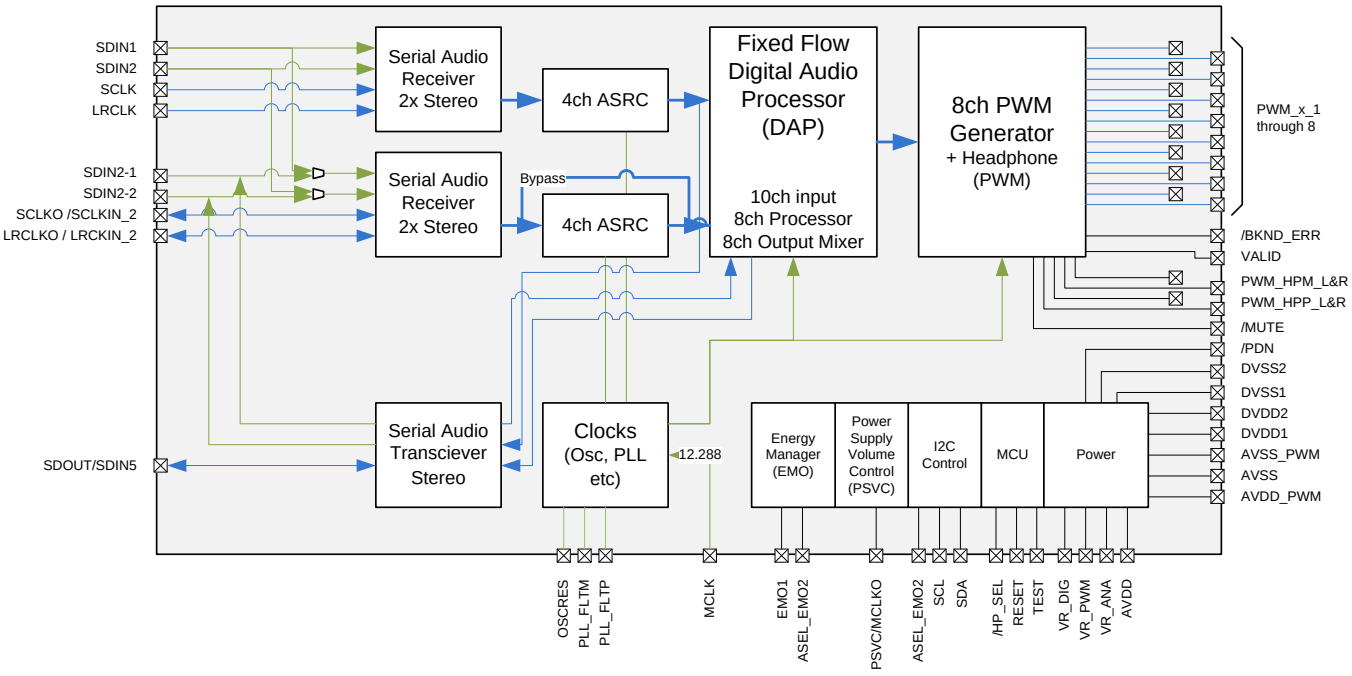


**Figure 13. Block Diagram**


Copyright © 2012–2015, Texas Instruments Incorporated

## Functional Block Diagram (continued)

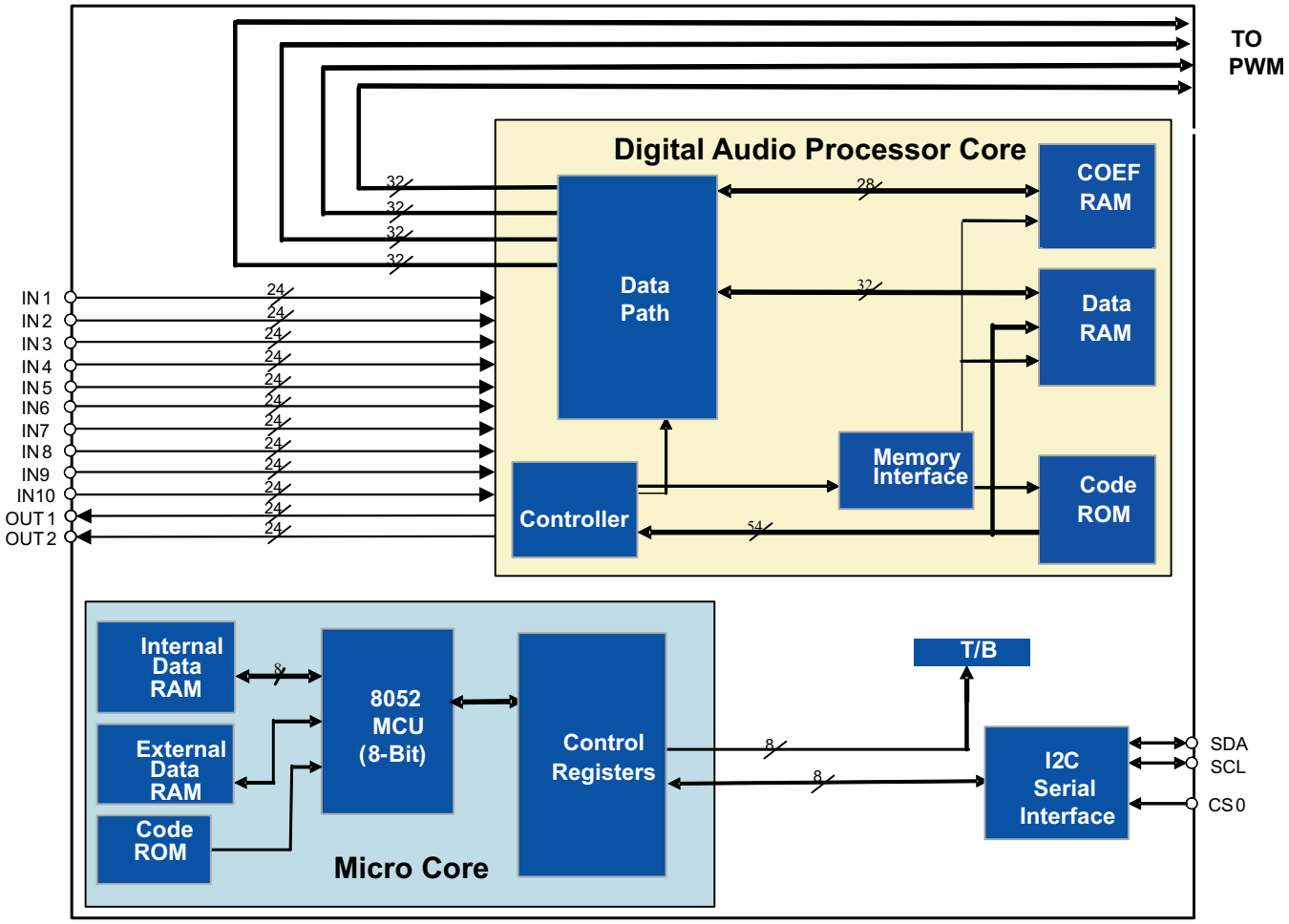


**Figure 14. DAP Block Diagram**

## 7.3 Feature Description

### 7.3.1 Serial Audio Interface Control and Timing

#### *7.3.1.1 Input I²S Timing*

I²S timing uses LRCLK to define when the data being transmitted is for the left channel and when it is for the right channel. LRCLK is low for the left channel and high for the right channel. A bit clock running at 64 $f_S$ is used to clock in the data. From the time the LRCLK signal changes state to the first bit of data on the data lines is a delay of one bit clock. The data is written MSB first and is valid on the rising edge of the bit clock. The TAS5548 masks unused trailing data bit positions.

2-Channel I²S (Philips Format) Stereo Input

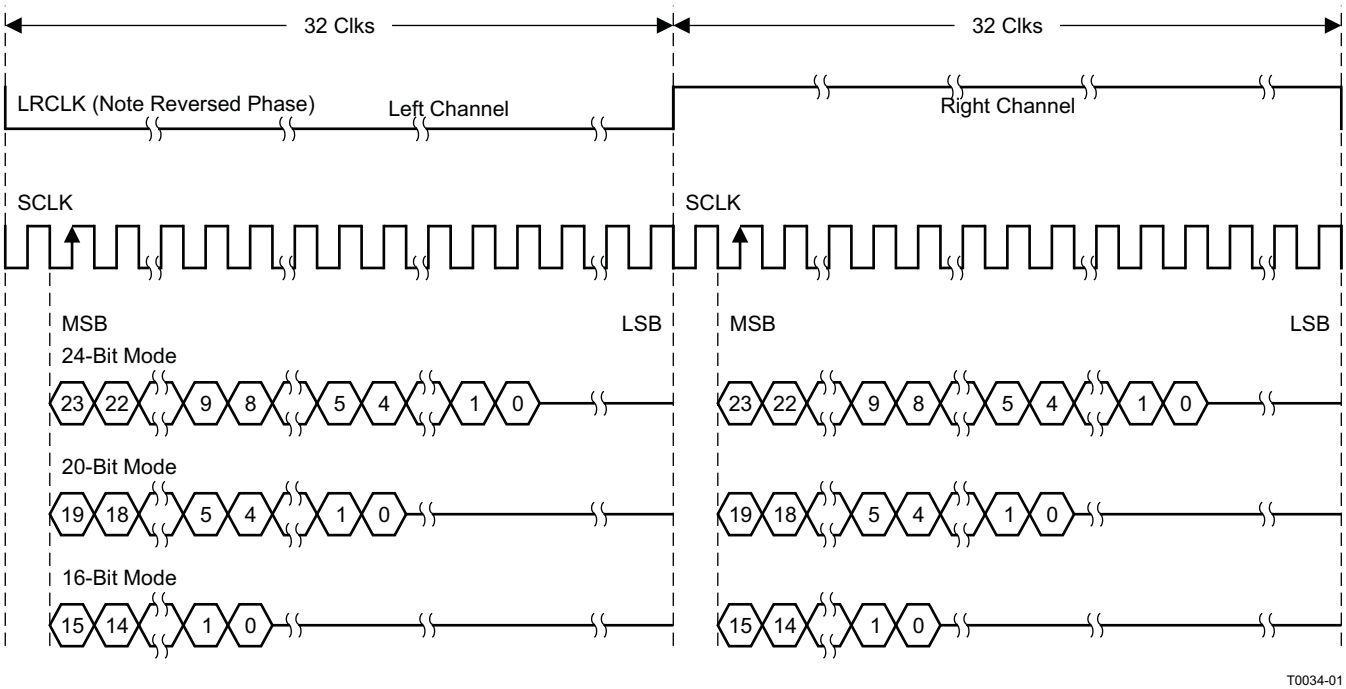


**Figure 15. I²S 64-$f_S$ Format**


Copyright © 2012–2015, Texas Instruments Incorporated

## Feature Description (continued)

### *7.3.1.2 Left-Justified Timing*

Left-justified (LJ) timing uses LRCLK to define when the data being transmitted is for the left channel and when it is for the right channel. LRCLK is high for the left channel and low for the right channel. A bit clock running at 64 $f_S$ is used to clock in the data. The first bit of data appears on the data lines at the same time LRCLK toggles. The data is written MSB first and is valid on the rising edge of the bit clock. The TAS5548 masks unused trailing data bit positions.

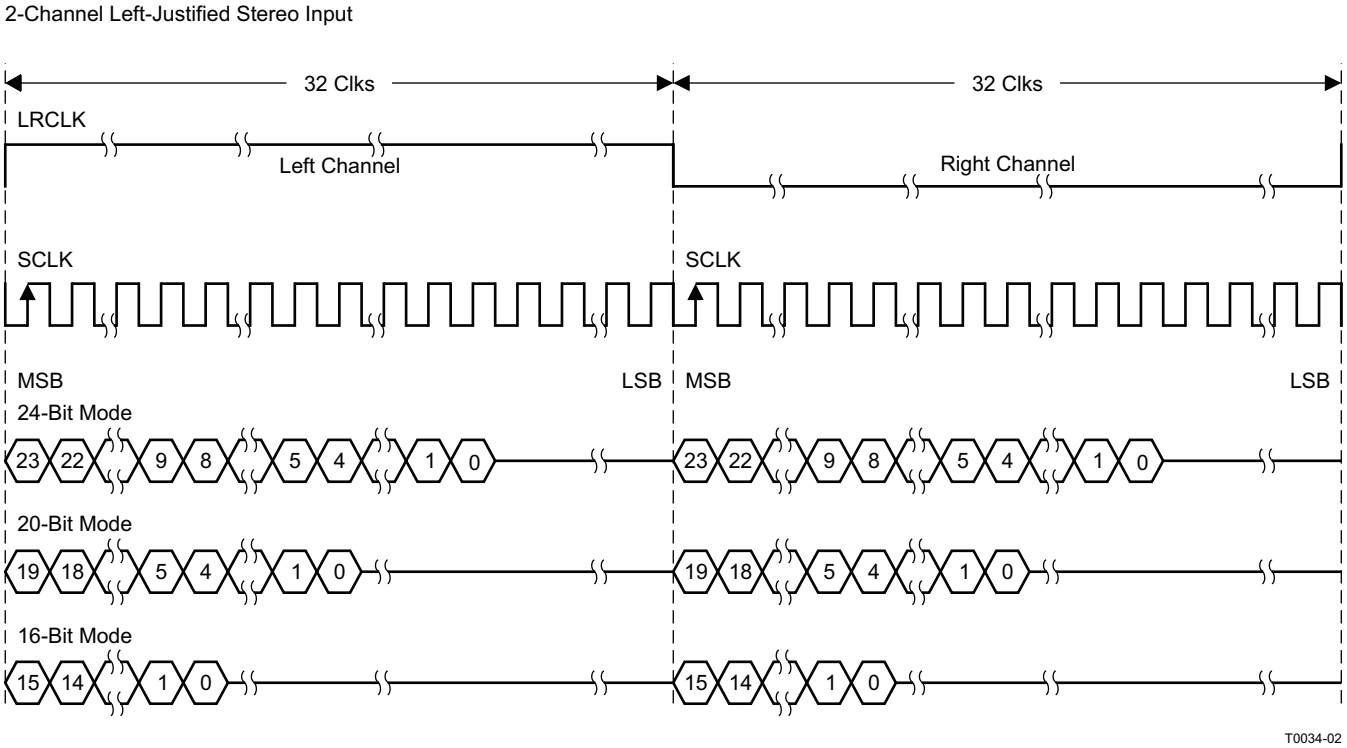


**Figure 16. Left-Justified 64-$f_S$ Format**

## Feature Description (continued)

### *7.3.1.3 Right-Justified Timing*

Right-justified (RJ) timing uses LRCLK to define when the data being transmitted is for the left channel and when it is for the right channel. LRCLK is high for the left channel and low for the right channel. A bit clock running at 64 $f_S$ is used to clock in the data. The first bit of data appears on the data lines eight bit-clock periods (for 24-bit data) after LRCLK toggles. In RJ mode the LSB of data is always clocked by the last bit clock before LRCLK transitions. The data is written MSB first and is valid on the rising edge of the bit clock. The TAS5548 masks unused leading data bit positions.

2-Channel Right-Justified (Sony Format) Stereo Input

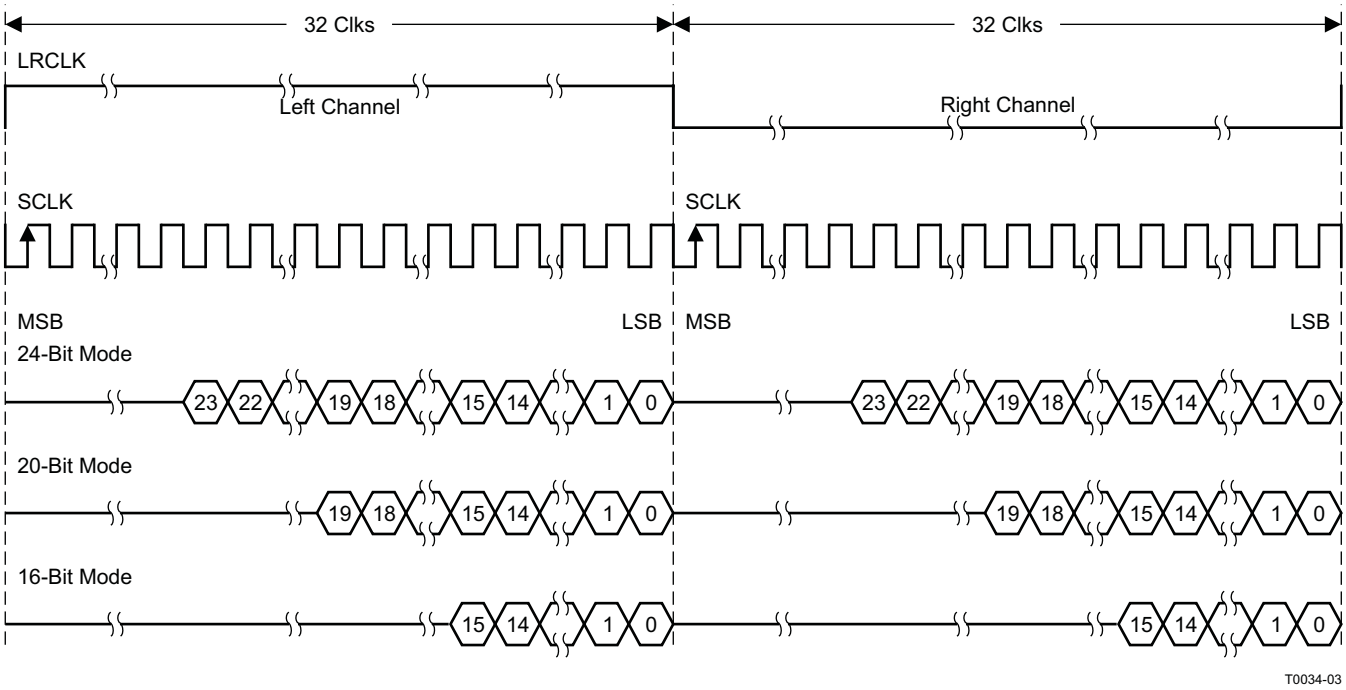


**Figure 17. Right-Justified 64-$f_S$ Format**

### 7.3.2 OUTPUT Serial Audio Output

Serial audio output formats supported are left justified (LJ), right justified (RJ) and I2S.

Serial audio output word lengths supported are 16 bits, 20 bits and 24 bits.

Other formats or word lengths are not supported.

### 7.3.3 I2S Master Mode

In master mode, the SDIN1/SDIN2/SDIN3/SDIN4 and optionally SDIN5 are assumed to be generated according to LRCLK and SCLK output by TAS5548.

As the SDIN5 will never go through the ASRC, the SDIN5 can be accepted with master mode only. Internally, the LRCLK and SCLK for the SDIN5 are always assumed to be the same with LRCLK and SCLK outputs. When set in I2S master mode, the I2S input/output formats should not mix I2S and LJ/RJ. If the input format is I2S then the output format must also be I2S. When the input format is not I2S then the output format must also not be I2S. Left justified and right justified can be mixed. When the SDIN5 is activated (SDOUT is not available), the LRCLKO will be the internal sample rate, that is either 96 kHz or 192 kHz. The SCLKO will be 64x LRCLKO.


Copyright © 2012–2015, Texas Instruments Incorporated

## Feature Description (continued)

### 7.3.4 LRCKO and SCLKO

There are output pins for LRCLK output and SCK output. As the SDIN5 rate (which always follow internal sample rate) and the SDOUT rate (which is 44.1 kHz or 48 kHz) is different, the LRCLKO will be the internal sample rate (96 kHz or 192 kHz) when SDIN5 is activated (SDOUT is not available) and it will be 44.1 kHz or 48 kHz when SDOUT is available. The SCLKO will be always 64x LRCLKO.

8.5 Master Clock Output (MCLKO) Master clock is generated from the MCLK input itself. There is a clock divider with division factor of 4, 2 or 1 that can be selected from. The default is no division

### 7.3.5 PWM Features

The TAS5548 has eight channels of high-performance digital PWM modulators that are designed to drive switching output stages (back ends) in both single-ended (SE) and bridge-tied-load (BTL) configurations. The device uses noise-shaping and sophisticated, error-correction algorithms to achieve high power efficiency and high-performance digital audio reproduction. The TAS5548 uses an AD/BD/Ternary PWM modulation scheme combined with a fourth-order noise shaper to provide a >105-dB SNR from 20 Hz to 20 kHz.

The PWM section accepts 32-bit PCM data from the DAP and outputs eight PWM audio output channels configurable as either:

- Six channels to drive power stages and two channels to drive a differential-input active filter to provide a separately controllable stereo lineout
- Eight channels to drive power stages

The PWM section provides a headphone PWM output to drive an external differential amplifier like the TPA6139A2. The headphone circuit uses the PWM modulator for channels 1 and 2. The headphone does not operate while the six or eight back-end drive channels are operating. The headphone is enabled via a headphone-select terminal.

The PWM section also contains the power-supply volume control (PSVC) PWM.

The interpolator, noise shaper, and PWM sections provide a PWM output with the following features:

- Up to 8× oversampling
  - 4× at $f_S$ = 88.2 kHz, 96 kHz
  - 2× at $f_S$ = 176.4 kHz, 192 kHz
- Fourth-order noise shaping
- 105-dB dynamic range 0–20 kHz (TAS5548 + TAS5614 system measured at speaker terminals)
- THD < 0.01%
- Adjustable modulation limit of 87.4% to 99.2%
- 3.3-V digital signal

#### *7.3.5.1 DC Blocking (High-Pass Filter Enable/Disable)*

Each input channel incorporates a first-order, digital, high-pass filter to block potential dc components. The filter –3-dB point is approximately 2-Hz at the 96-kHz sampling rate. The high-pass filter can be enabled and disabled via the $I^2C$ system control register 1 (0x03 bit D7). The default setting is 1 (high-pass filter enabled).

#### *7.3.5.2 AM Interference Avoidance*

Digital amplifiers can degrade AM reception as a result of their RF emissions. Texas Instruments' patented AM interference-avoidance circuit provides a flexible system solution for a wide variety of digital audio architectures. During AM reception, the TAS5548 adjusts the radiated emissions to provide an emission-clear zone for the tuned AM frequency. The inputs to the TAS5548 for this operation are the tuned AM frequency, the IF frequency, and the sample rate. This PWM rate modification is done by modifying the output rate of the Sample Rate Converter, and the following DSP and PWM modulator.

### 7.3.6 TAS5548 Controls and Status

The TAS5548 provides control and status information from both the $I^2C$ registers and device pins.

## Feature Description (continued)

This section describes some of these controls and status functions. The I$^2$C summary and detailed register descriptions are contained in Register Maps and *I $^2$C Serial-Control Interface*.

### *7.3.6.1 I$^2$C Status Registers*

The TAS5548 has two status registers that provide general device information. These are the general status register 0 (0x01) and the error status register (0x02).

#### 7.3.6.1.1 General Status Register (0x01)

- Device identification code

#### 7.3.6.1.2 Error Status Register (0x02)

- No internal errors (the valid signal is high)
- Audio Clip indicator. Writing to the register clears the indicator.
- This error status register is normally used for system development only.

### *7.3.6.2 TAS5548 Pin Controls*

The TAS5548 provide a number of terminal controls to manage the device operation. These controls are:

- $\overline{\text{RESET}}$
- $\overline{\text{PDN}}$
- $\overline{\text{BKND_ERR}}$
- $\overline{\text{HP_SEL}}$
- $\overline{\text{MUTE}}$
- PSVC
- EMO1 (see *System Power Contoller* section)
- EMO2 (see *System Power Contoller* section)

#### 7.3.6.2.1 Reset ($\overline{\text{RESET}}$)

The TAS5548 is placed in the reset mode either by the power-up reset circuitry when power is applied, or by setting the $\overline{\text{RESET}}$ terminal low.

$\overline{\text{RESET}}$ is an asynchronous control signal that restores the TAS5548 to the hard-mute state (Non PWM Switching). Master volume is immediately set to full attenuation (there is no ramp down). Reset initiates the device reset without an MCLK input. As long as the $\overline{\text{RESET}}$ terminal is held low, the device is in the reset state. During reset, all I$^2$C and serial data bus operations are ignored.

Table 1 shows the device output signals while $\overline{\text{RESET}}$ is active.

**Table 1. Device Outputs During Reset**

| SIGNAL | SIGNAL STATE |
|---|---|
| Valid | Low |
| PWM P-outputs | Low (Non PWM Switching) |
| PWM M-outputs | Low (Non PWM Switching) |
| SDA | Signal input (not driven) |

Because $\overline{\text{RESET}}$ is an asynchronous signal, clicks and pops produced during the application (the leading edge) of $\overline{\text{RESET}}$ cannot be avoided. However, the transition from the hard-mute state (Non PWM Switching) to the operational state is performed using a quiet start-up sequence to minimize noise. This control uses the PWM reset and unmute sequence to shut down and start up the PWM. If a completely quiet reset or power-down sequence is desired, $\overline{\text{MUTE}}$ should be applied before applying $\overline{\text{RESET}}$.

The rising edge of the reset pulse begins device initialization before the transition to the operational mode. During device initialization, all controls are reset to their initial states. Table 2 shows the default control settings following a reset.


Copyright © 2012–2015, Texas Instruments Incorporated

**Table 2. Values Set During Reset**

| CONTROL | SETTING |
|---|---|
| Output mixer configuration | 0xD0 bit 30 = 0 (remapped output mixer configuration) |
| High pass | Enabled |
| Unmute from clock error | Hard unmute |
| Input automute | Enabled |
| Output automute | Enabled |
| Serial data interface format | $I^2S$, 24-bit |
| Individual channel mute | No channels are muted |
| Automute delay | 14.9 ms |
| Automute threshold 1 | < 8 bits |
| Automute threshold 2 | Same as automute threshold 1 |
| Modulation limit | 93.7% (Note: Some power stages require a lower modulation index) |
| Six- or eight-channel configuration | Eight channels |
| Volume and mute update rate | Volume ramp 42.6 ms |
| Treble and bass slew rate | Update every 1.31 ms |
| Bank switching | Manual bank selection is enabled |
| Biquad coefficients | Set to all pass |
| Input mixer coefficients | Input N → Channel N, no attenuation |
| Output mixer coefficients | Channel N → Output N, no attenuation |
| Subwoofer sum into Ch1 and Ch2 | Gain of 0 |
| Ch1 and Ch2 sum in subwoofer | Gain of 0 |
| Bass and treble bypass/inline | Bypass |
| DRC bypass/inline | Bypass |
| DRC | Default values |
| Master volume | Mute |
| Individual channel volumes | 0 dB |
| All bass and treble indexes | 0 dB |
| Treble filter sets | Filter set 3 |
| Bass filter sets | Filter set 3 |
| Loudness | Loudness disabled, default values |
| AM interference mode enable | Disabled |
| AM interference mode IF | 455 kHz |
| AM interference mode select sequence | 1 |
| AM interference mode tuned frequency and input mode | 0000, BCD |

After the initialization time, the TAS5548 starts the transition to the operational state with the master volume set at mute.

Because the TAS5548 has an internal oscillator time base, following the release of reset, oscillator trim command is needed so the TAS5548 can detect the MCLK and data rate and perform the initialization sequences. The PWM outputs are held at a mute state until the master volume is set to a value other than mute via $I^2C$.

#### 7.3.6.2.2 Power Down ($\overline{PDN}$)

The TAS5548 can be placed into the power-down mode by holding the $\overline{PDN}$ terminal low. When the power-down mode is entered, both the PLL and the oscillator are shut down. Volume is immediately set to full attenuation (there is no ramp down). This control uses the PWM mute sequence that provides a low click and pop transition to a non PWM switching mute state.

Power down is an asynchronous operation that does not require MCLK to go into the power-down state. To initiate the power-up sequence requires MCLK to be operational and the TAS5548 to receive five MCLKs prior to the release of $\overline{\text{PDN}}$.

As long as the $\overline{\text{PDN}}$ pin is held low, the device is in the power-down state with the PWM outputs not switching. During power down, all I$^2$C and serial data bus operations are ignored. Table 3 shows the device output signals while $\overline{\text{PDN}}$ is active.

**Table 3. Device Outputs During Power Down**

| SIGNAL | SIGNAL STATE |
|---|---|
| VALID | Low |
| PWM P-outputs | Not Switching = Low |
| PWM M-outputs | Not Switching = Low |
| SDA | Inputs Ignored |
| PSVC | Low |

Following the application of $\overline{\text{PDN}}$, the TAS5548 does not perform a quiet shutdown to prevent clicks and pops produced during the application (the leading edge) of this command. The application of $\overline{\text{PDN}}$ immediately performs a PWM stop. A quiet stop sequence can be performed by first applying $\overline{\text{MUTE}}$ before $\overline{\text{PDN}}$.

When $\overline{\text{PDN}}$ is released, the system goes to the end state specified by the $\overline{\text{MUTE}}$ and $\overline{\text{BKND_ERR}}$ pins and the I$^2$C register settings.

#### 7.3.6.2.3 Back-End Error ($\overline{\text{BKND_ERR}}$)

Back-end error is used to provide error management for back-end error conditions. Back-end error is a level-sensitive signal. Back-end error can be initiated by bringing the $\overline{\text{BKND_ERR}}$ terminal low for a minimum of five MCLK cycles. When $\overline{\text{BKND_ERR}}$ is brought low, the PWM sets either six or eight channels into the PWM back-end error state. This state is described in *PWM Features*. Once the back-end error is removed, a delay of 5 ms is performed before the system starts the output re-initialization sequence. After the initialization time, the TAS5548 begins normal operation. During back-end error I$^2$C registers retain current values.

**Table 4. Device Outputs During Back-End Error**

| SIGNAL | SIGNAL STATE |
|---|---|
| Valid | Low |
| PWM P-outputs | Non PWM Switching = low |
| PWM M-outputs | Non PWM Switching = low |
| PWM_HP P-outputs | Non PWM Switching = low |
| PWM_HP M-outputs | Non PWM Switching = low |
| SDA | Signal input (not driven) |

##### *7.3.6.2.3.1 $\overline{\text{BKND_ERR}}$ and VALID*

The number of channels that are affected by the $\overline{\text{BKND_ERR}}$ signal depends on the setting of bit D1 of I$^2$C register 0xE0. If the I$^2$C setting (of bit D1) is 0 (8-channel mode), the TAS5548 places all eight PWM outputs in the PWM back-end error state. If the I$^2$C setting (of bit D1) is 1, the TAS5548 is in 6-channel mode. For proper operation in 6-channel mode, the lineout configuration registers (0x09 and 0x0A) must be 0x00 instead of the default of 0xE0. In this case, VALID is pulled LOW, and the TAS5548 brings PWM outputs 1, 2, 3, 4, 7, and 8 to a back-end error state, while not affecting lineout channels 5 and 6. Table 4 shows the device output signal states during back-end error.

#### 7.3.6.2.4 Speaker/Headphone Selector ($\overline{\text{HP_SEL}}$)

The $\overline{\text{HP_SEL}}$ terminal enables the headphone output or the speaker outputs. The headphone output receives the processed data output from DAP and PWM channels 1 and 2.

In 6-channel configuration, this feature does not affect the two lineout channels.

When low, the headphone output is enabled. In this mode, the speaker outputs are disabled. When high, the speaker outputs are enabled and the headphone is disabled.


Copyright © 2012–2015, Texas Instruments Incorporated

Changes in the pin logic level result in a state change sequence using soft mute (PWM switching at 50/50, noise shaper on) to the hard mute (non-PWM switching) mode for both speaker and headphone followed by a soft unmute.

When $\overline{\text{HP_SEL}}$ is low, the configuration of channels 1 and 2 is defined by the headphone configuration register. When $\overline{\text{HP_SEL}}$ is high, the channel-1 and -2 configuration registers define the configuration of channels 1 and 2.

If using the remapped-output mixer configuration (0xD0 bit 30 = 0) in the 6-channel mode, the headphone operation is modified. That is, following the assertion or de-assertion of headphone, mute must be asserted and de-asserted using the $\overline{\text{MUTE}}$ pin.

#### 7.3.6.2.5 Mute ($\overline{\text{MUTE}}$)

The mute control provides a noiseless volume ramp to silence. Releasing mute provides a noiseless ramp to previous volume. The TAS5548 has both master and individual channel mute commands. A terminal is also provided for the master mute. The master mute $I^2C$ register and the $\overline{\text{MUTE}}$ terminal are logically ORed together. If either is asserted, a mute on all channels is performed. The master mute command operates on all channels regardless of whether the system is in the 6- or 8-channel configuration. PWM is switching at 50% duty cycle during mute.

The master mute terminal is used to support a variety of other operations in the TAS5548, such as setting the biquad coefficients, the serial interface format, and the clock rates. A mute command by the master mute terminal, individual $I^2C$ mute, the AM interference mute sequence, the bank-switch mute sequence, or automute overrides an unmute command or a volume command. While a mute is active, the commanded channels are placed in a mute state. When a channel is unmuted, it goes to the last commanded volume setting that has been received for that channel.

#### 7.3.6.2.6 Power-Supply Volume Control (PSVC)

The TAS5548 supports volume control both by conventional digital gain/attenuation and by a combination of digital and analog gain/attenuation. Varying the H-bridge power-supply voltage performs the analog volume control function. The benefits of using power-supply volume control (PSVC) are reduced idle channel noise, improved signal resolution at low volumes, increased dynamic range, and reduced radio frequency emissions at reduced power levels. The PSVC is enabled via $I^2C$. When enabled, the PSVC provides a PWM output that is filtered to provide a reference voltage for the power supply. The power-supply adjustment range can be set for –-12.04, –18.06, or –24.08 dB, to accommodate a range of variable power-supply designs.

Figure 18 and Figure 19 show how power-supply and digital gains can be used together.

The volume biquad (0xCF) can be used to implement a low-pass filter in the digital volume control to match the PSVC volume transfer function. Note that if the PVSC function is not used, the volume biquad is all-pass (default).

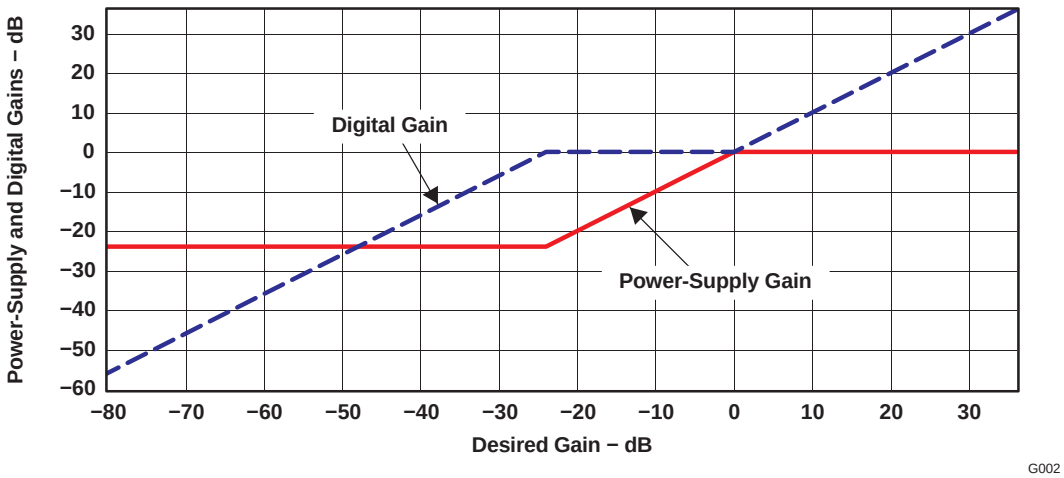


**Figure 18. Power-Supply and Digital Gains (Linear Space)**

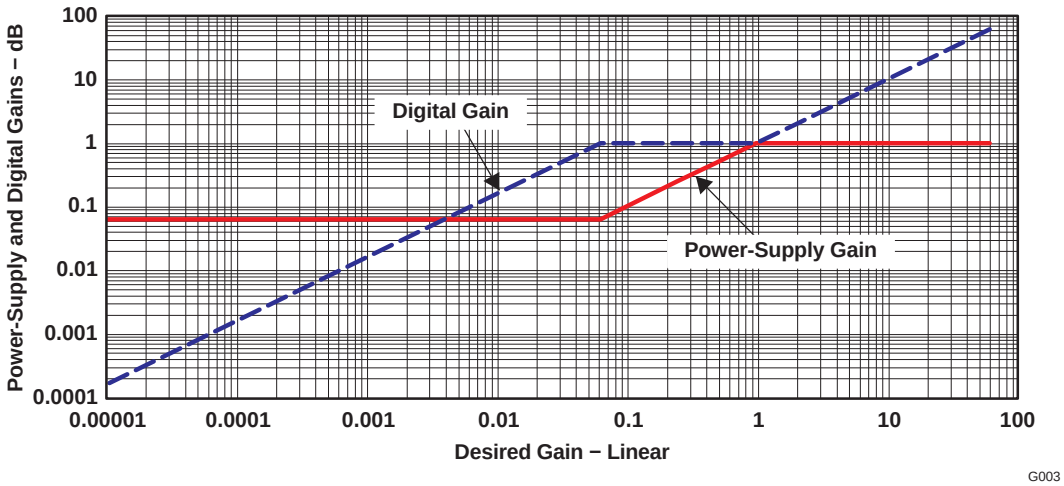


**Figure 19. Power-Supply and Digital Gains (Log Space)**


Copyright © 2012–2015, Texas Instruments Incorporated

## 7.4 Device Functional Modes

Figure 23 shows the TAS5548 functional structure. The following sections describe the TAS5548 functional blocks:

- Power Supply
- Clock, PLL, and Serial Data Interface
- Serial Control Interface
- Device Control
- Digital Audio Processor
- PWM Section
- 8 Channel ASRC

### 7.4.1 Power Supply

The power-supply section contains 1.8 V supply regulators that provide analog and digital regulated power for various sections of the TAS5548. The analog supply supports the analog PLL, whereas digital supplies support the digital PLL, the digital audio processor (DAP), the pulse-width modulator (PWM), and the output control.

### 7.4.2 Clock, PLL, and Serial Data Interface

In the TAS5548, the internal master clock is derived from the XTAL and the internal sampling rate will always be 96 kHz (double speed mode) or 192 kHz (quad speed mode).

There is a fifth (I2S input) SAP input that will not go through the ASRC. Due to this, this fifth SAP input will be always slave to internal master clock.

Due to the limitation in the ASRC block, in quad speed mode the number of supported channels will be halved, which happens when the ASRC is set into a certain mode. In this mode, only one serial audio input (two channels) will be processed per ASRC module and its output will be copied to the other two channels at the ASRC output.

The TAS5548 uses the external crystal to provide a time base for:

- Continuous data and clock error detection and management
- Automatic data-rate detection and configuration
- Automatic MCLK-rate detection and configuration (automatic bank switching)
- Supporting $I^2C$ operation/communication while MCLK is absent

  The TAS5548 automatically handles clock errors, data-rate changes, and master-clock frequency changes without requiring intervention from an external system controller. This feature significantly reduces system complexity and design.

### 7.4.3 Serial Audio Interface

The TAS5548 has five PCM serial data interfaces to permit eight channels of digital data to be received through the SDIN1-1, SDIN1-2, SDIN2-1, SDIN2-2 and SDIN5 inputs. The device also has one serial audio output. The serial audio data is in MSB-first, 2s-complement format.

The serial data input interface can be configured in right-justified, $I^2S$ or left-justified. The serial data interface format is specified using the $I^2C$ data-interface control register. The supported formats and word lengths are shown in Table 5.

**Table 5. Serial Data Formats**

| RECEIVE SERIAL DATA FORMAT | WORD LENGTH |
|---|---|
| Right-justified | 16 |
| Right-justified | 20 |
| Right-justified | 24 |
| $I^2S$ | 16 |
| $I^2S$ | 20 |
| $I^2S$ | 24 |
| Left-justified | 16 |

**Table 5. Serial Data Formats (continued)**

| RECEIVE SERIAL DATA FORMAT | WORD LENGTH |
|---|---|
| Left-justified | 20 |
| Left-justified | 24 |

Serial data is input on SDIN1-SDIN5. The device will accept 32, 44.1, 48, 88.2, 96, 176.4 and 192 kHz serial data in 16, 20 or 24-bit data in Left, Right and I2S serial data formats using a 64 Fs SCLK clock and a 64, 128, 192, 256, 384, or 512 * Fs MCLK rates (up to a maximum of 50 MHz).

**NOTE**

To run MCLK at 64 Fs, the source signal must be at least 48 kHz.

Serial Data is output on SDOUT. The SDOUT data format is I2S 24 bit.

The parameters of this clock and serial data interface are I2C configurable. But the default is autodetect.

### 7.4.4 I $^2$C Serial-Control Interface

The TAS5548 has an I$^2$C serial-control slave interface to receive commands from a system controller. The serial-control interface supports both normal-speed (100-kHz) and high-speed (400-kHz) operations without wait states.

The serial control interface supports both single-byte and multiple-byte read/write operations for status registers and the general control registers associated with the PWM. However, for the DAP data-processing registers, the serial control interface also supports multiple-byte (4-byte) write operations.

The I$^2$C supports a special mode which permits I$^2$C write operations to be broken up into multiple data-write operations that are multiples of 4 data bytes. These are 6-byte, 10-byte, 14-byte, 18-byte, etc., write operations that are composed of a device address, read/write bit, subaddress, and any multiple of 4 bytes of data. This permits the system to incrementally write large register values with multiple 4 byte transfers. I$^2$C transactions. In order to use this feature, the first block of data is written to the target I$^2$C address, and each subsequent block of data is written to a special append register (0xFE) until all the data is written and a stop bit is sent. An incremental read operation is not supported using 0xFE.

### 7.4.5 Device Control

The control section provides the control and sequencing for the TAS5548. The device control provides both high- and low-level control for the serial control interface, clock and serial data interfaces, digital audio processor, and pulse-width modulator sections.

### 7.4.6 Energy Manager

Energy Manager monitors the overall energy (power) in the system. It can be programmed to monitor the energy of all channels or satellite and sub separately. The output of energy manager, all called EMO, is a flag that is set when the energy level crosses above the programmed threshold. This level is indicated in internal status registers as well as in pin output.

### 7.4.7 Digital Audio Processor (DAP)

The DAP arithmetic unit is used to implement all audio-processing functions: soft volume, loudness compensation, bass and treble processing, dynamic range control, channel filtering, and input and output mixing. Figure 23 shows the TAS5548 DAP architecture.

#### *7.4.7.1 TAS5548 Audio-Processing Configurations*

The 32-kHz to 96-kHz configuration supports eight channels of data processing that can be configured either as eight channels, or as six channels with two channels for separate stereo line outputs. All data is SRC'd to 96kHz in this mode, and processed in the DAP at 96kHz.

The 176.4-kHz to 192-kHz configuration supports four channels of signal processing with two channels passed through (or derived from the three processed channels).


Copyright © 2012–2015, Texas Instruments Incorporated

To support efficiently the processing requirements of both multichannel 32-kHz to 96-kHz data and the 6-channel 176.4-kHz and 192-kHz data, the TAS5548 has separate audio-processing features for 32-kHz to 96-kHz data rates and for 176.4 kHz and 192 kHz. See Table 6 for a summary of TAS5548 processing feature sets.

#### *7.4.7.2 TAS5548 Audio-Processing Feature Sets*

The audio processing architecture of the TAS5548 DAP for normal and double speed configurations is shown below.

**Table 6. TAS5548 Audio-Processing Feature Sets**

| FEATURE | 32 kHz–96 kHz 8-CHANNEL FEATURE SET | 32 kHz–96 kHz 6 + 2 LINEOUT FEATURE SET | 176.4- and 192-kHz FEATURE SET |
|---|---|---|---|
| Signal-processing channels | 8 | 6 + 2 | 4 |
| Master volume | 1 for 8 channels | 1 for 6 channels | 1 for 4 channels |
| Individual channel volume controls | 8 | | 4 |
| Bass and treble tone controls | Four bass and treble tone controls with ±18-dB range, programmable corner frequencies, and second- order slopes<br>L, R, and C<br>LS, RS<br>LBS, RBS<br>Sub | Four bass and treble tone controls with ±18-dB range, programmable corner frequencies, and second- order slopes<br>L, R, and C<br>LS, RS<br>Sub<br>Line L and R | Two bass and treble tone controls with ±18-dB range, programmable corner frequencies, and second-order slopes for satellite channels (selectable). One Bass Control for Sub (channel 8) |
| Biquads | 56 | | 22 |
| Dynamic range compressors | 1 for 7 satellites and 1 for sub | 1 for satellites and 1 for sub (Line 1 and 2 Uncompressed) | 2 - 1 for 3 satellites and 1 for sub |
| Input/output mapping/ mixing | Each of the eight signal-processing channels input can be any ratio of the eight input channels.<br>Each of the eight outputs can be any ratio of any two processed channels. | | Channels 1, 2, 5, 6 has 4×1 mixer on the output and input |
| DC-blocking filters (implemented in PWM section) | Eight channels | | |
| Digital de-emphasis (implemented in PWM section) | Eight channels for 32 kHz, 44.1 kHz, and 48 kHz | Six channels for 32 kHz, 44.1 kHz, and 48 kHz | N/A |
| Loudness | Eight channels | Six channels | Four channels |
| Number of coefficient sets stored | Two additional coefficient sets can be stored in memory. (Bank Switching data for ASRC Bypass Mode) | | |

### 7.4.8 Pulse Width Modulation Schemes

TAS5548 supports three PWM modulations schemes: AD Mode, BD Mode and Ternary Mode. Ternary mode is selected using register 0X25, bit D5. For AD and BD Modulation schemes, this bit should be set to 0. AD/BD mode is selected via input mux registers 0X30-0X33. Following PWM timing diagram shows the three different schemes.

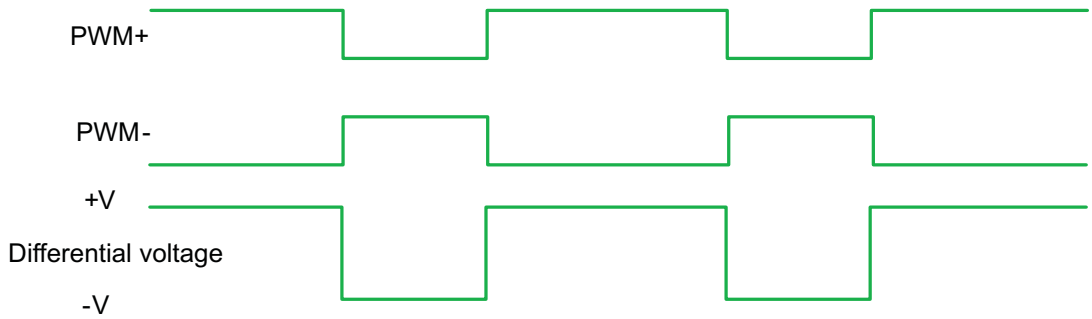


**Figure 20. AD Modulation**

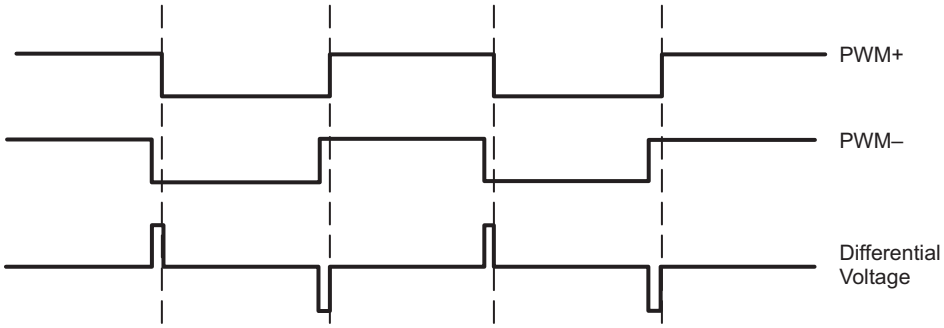


**Figure 21. BD Modulation**

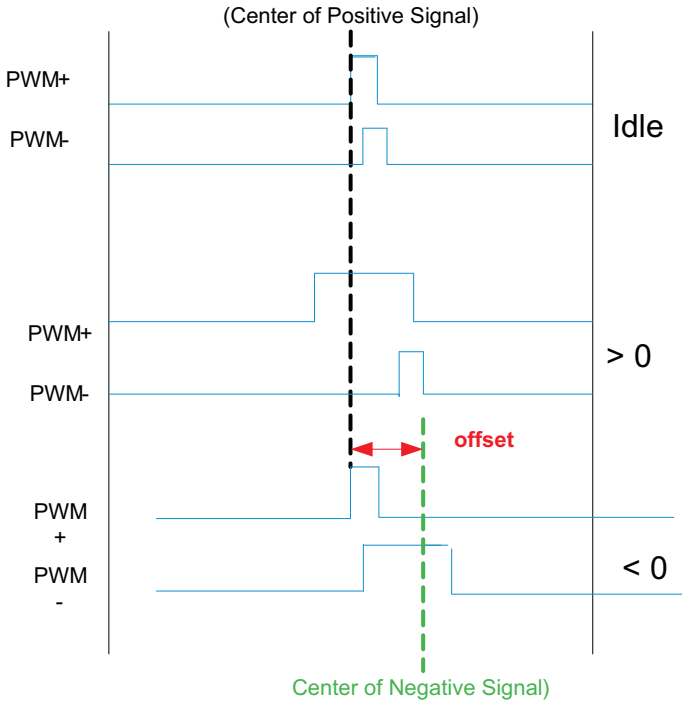


**Figure 22. Ternary Modulation**

### 7.4.9 TAS5548 DAP Architecture Diagrams

The TAS5548 defaults to processing audio data (post ASRC) at double rate. In the TAS5548, this is set to 96kHz (by the external XTAL used). . Additional support is provided for native 192kHz support. 4ch of audio processing is available in 192kHz native processing mode.

Figure 23 shows the TAS5548 DAP architecture for $f_S \leq 96$ kHz. The bass management architecture is shown in channels 1, 2, 7 and 8. The I2C registers are shown to help the designer configure the device.

Figure 24 shows the architecture for $f_S = 176.4$ kHz or $f_S = 192$ kHz. Note that only channels 1, 2, 7 and 8 contain limited features. Channels 3–6 are pass-through except for volume controls.

Figure 25 shows TAS5548 detailed channel processing. The output mixer is 8×2 for channels 1–6 and 8×3 for channels 7 and 8.


Copyright © 2012–2015, Texas Instruments Incorporated

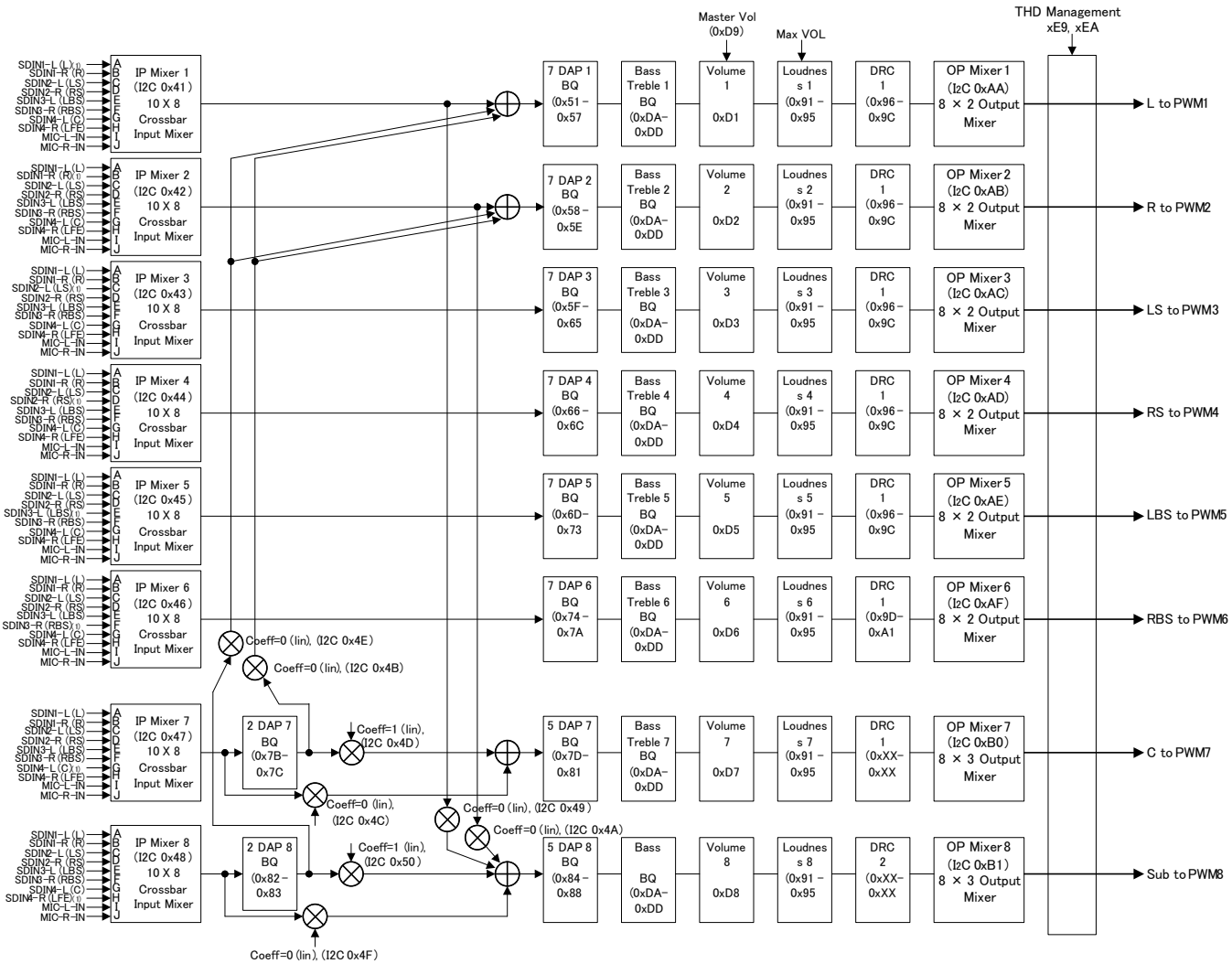


(1) Default inputs

**Figure 23. TAS5548 DAP Architecture With I²C Registers ($f_S$ ≤ 96 kHz)**

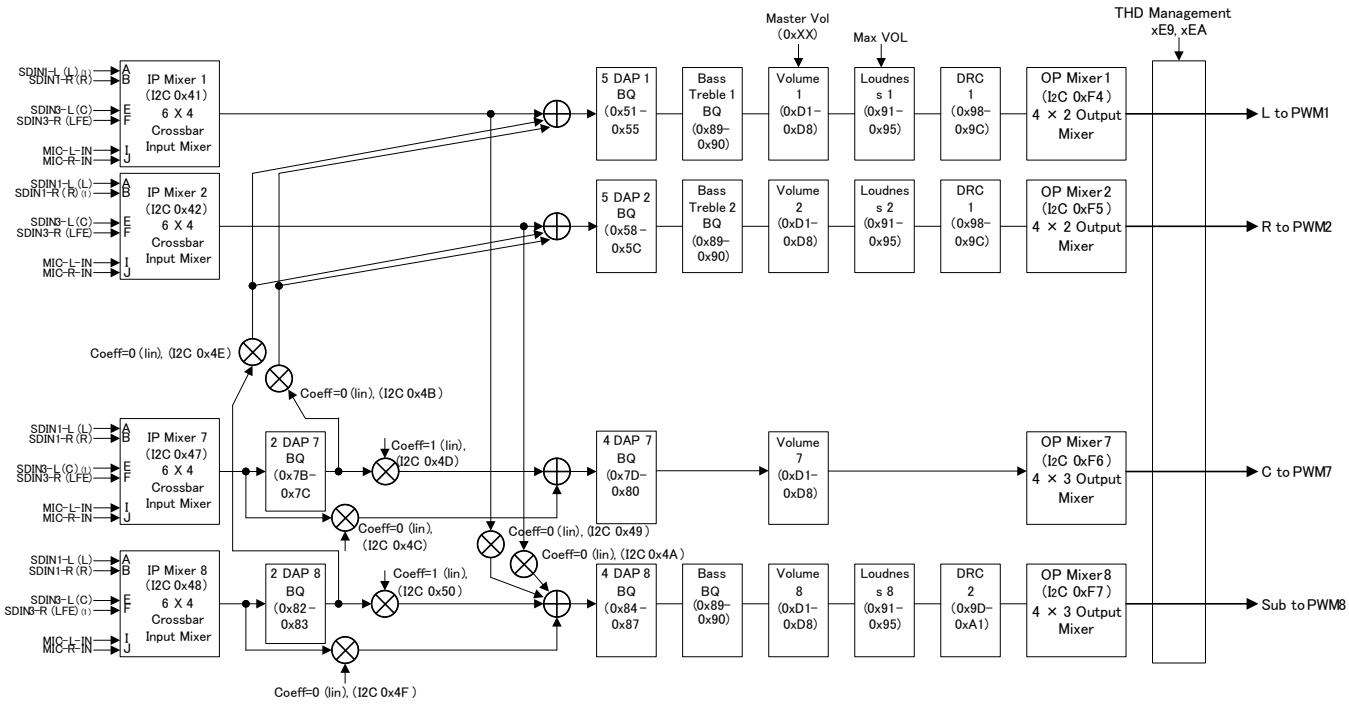


(1) Default inputs

**Figure 24. TAS5548 Architecture With I²C Registers in 192kHz Native Mode ($f_S$ = 176.4 kHz or $f_S$ = 192 kHz)**

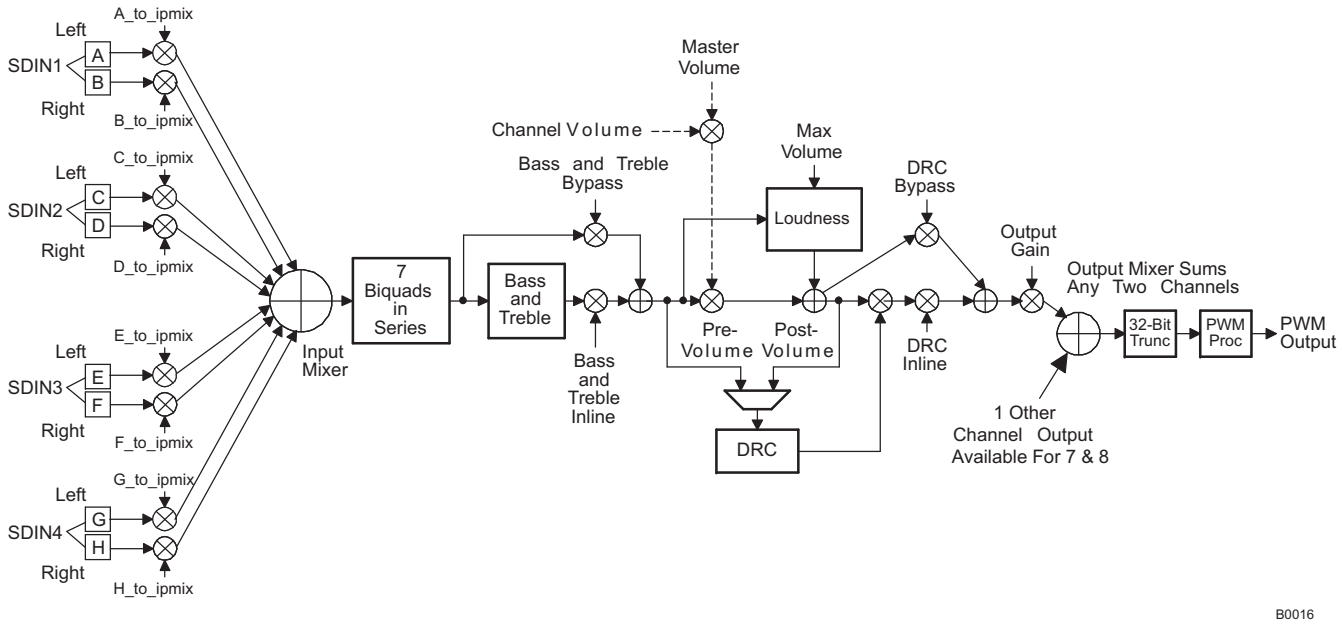


**Figure 25. TAS5548 Detailed Channel Processing**

### 7.4.10 I²C Coefficient Number Formats

The architecture of the TAS5548 is contained in ROM resources within the device and cannot be altered. However, mixer gain, level offset, and filter tap coefficients, which can be entered via the I²C bus interface, provide a user with the flexibility to set the TAS5548 to a configuration that achieves system-level goals.


Copyright © 2012–2015, Texas Instruments Incorporated

The firmware is executed in a 32-bit, signed, fixed-point arithmetic machine. The most significant bit of the 32-bit data path is a sign bit, and the 31 lower bits are data bits. Mixer gain operations are implemented by multiplying a 32-bit, signed data value by a 28-bit, signed gain coefficient (known as 5.23 in the rest of this document. See for more details). The 60-bit, signed output product is then truncated to a signed, 32-bit number. Level offset operations are implemented by adding a 32-bit, signed offset coefficient to a 32-bit, signed data value.

In most cases, if the addition results in overflowing the 32-bit, signed number format, saturation logic is used. This means that if the summation results in a positive number that is greater than 0x7FFF FFFF FF (the spaces are used to ease the reading of the hexadecimal number), the number is set to 0x7FFF FFFF FF. If the summation results in a negative number that is less than 0x8000 0000 00, the number is set to 0x8000 0000 00. This allows the system to clip in a similar way to an analog circuit, rather than "wrapping around" to a polar opposite output.

#### *7.4.10.1 Digital Audio Processor (DAP) Arithmetic Unit*

The digital audio processor (DAP) arithmetic unit is a fixed-point computational engine consisting of an arithmetic unit and data and coefficient memory blocks.

The DAP arithmetic unit is used to implement all firmware functions - loudness compensation, bass and treble processing, dynamic range control, channel filtering, input and output mixing.

Figure 26 shows the data word structure of the DAP arithmetic unit. Four bits of overhead or guard bits are provided at the upper end of the 32-bit DAP word, and 4 bits of computational precision or noise bits are provided at the lower end of the 32-bit word. The incoming digital audio words are all positioned with the most significant bit abutting the 4-bit overhead/guard boundary. The sign bit in bit 31 indicates that all incoming audio samples are treated as signed data samples.

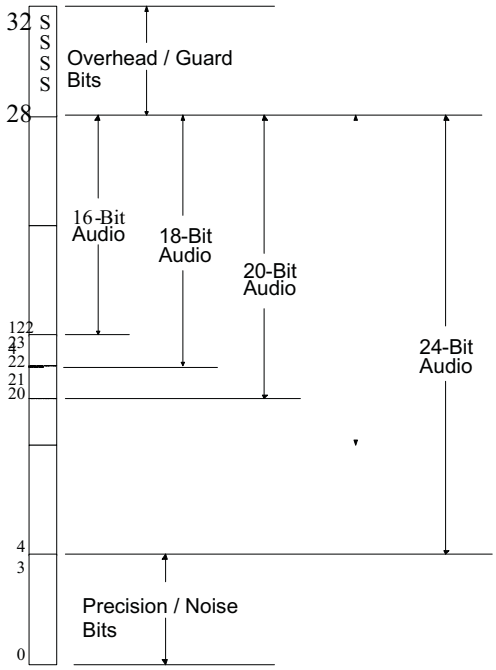


**Figure 26. DAP Arithmetic Unit Data Word Structure**

The arithmetic engine is a 32-bit (9.23 format) processor consisting of a general-purpose 60-bit arithmetic logic unit and function-specific arithmetic blocks. Multiply operations (excluding the function-specific arithmetic blocks) always involve 32-bit (9.23) DAP words and 28-bit (5.23) coefficients (usually I2C programmable coefficients). If a group of products are to be added together, the 60-bit product of each multiplication is applied to a 60-bit adder, where a DSP-like multiply-accumulate (MAC) operation takes place. Biquad filter computations use the MAC operation to maintain precision in the intermediate computational stages.

To maximize the linear range of the 76-bit ALU, saturation logic is not used. In MAC computations, intermediate overflows are permitted, and it is assumed that subsequent terms in the computation flow will correct the overflow condition. The biquad filter structure used in the TAS5548 is the “direct form I” structure and has only one accumulation node (for an example, see *Biquad Filters*). With this type of structure, intermediate overflow are allowable as long as the designer of the filters has assured that the final output will bounded and not overflow. Figure 27 is an example, using 8-bit arithmetic for ease of illustration, of a bounded computation that experiences intermediate overflow condition.

The DAP memory banks include a dual port data RAM for storing intermediate results, a coefficient RAM, and a fixed program ROM. Only the coefficient RAM, assessable via the I2C bus, is available to the user.

8-Bit ALU Operation
(Without Saturation)

| | | | |
|---|---|---|---|
| | 10110111 | (-73) | -73 |
| | + 11001101 | (-51) | + -51 |
| | 10000100 | (-124) | -124 |
| | + 11010011 | (-45) | + -45 |
| Rollover → | 01010111 | (57) | -169 |
| | + 00111011 | (59) | + 59 |
| | 10010010 | (-110) | -110 |

**Figure 27. DAP ALU Operation With Intermediate Overflow**

### *7.4.10.2 28-Bit 5.23 Number Format*

All mixer gain coefficients are 28-bit coefficients using a 5.23 number format. Numbers formatted as 5.23 numbers have 5 bits to the left of the binary point and 23 bits to the right of the binary point. This is shown in Figure 28.

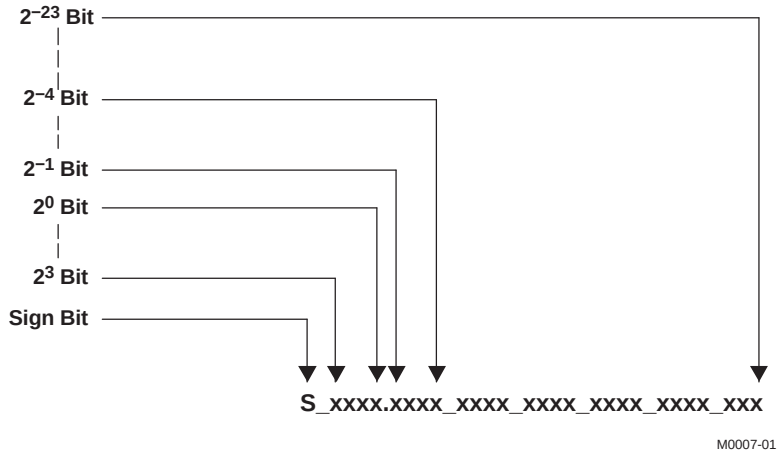


**Figure 28. 5.23 Format**

The decimal value of a 5.23 format number can be found by following the weighting shown in Figure 29. If the most significant bit is logic 0, the number is a positive number, and the weighting shown yields the correct number. If the most significant bit is a logic 1, then the number is a negative number. In this case, every bit must be inverted, a 1 added to the result, and then the weighting shown in Figure 29 applied to obtain the magnitude of the negative number.


Copyright © 2012–2015, Texas Instruments Incorporated

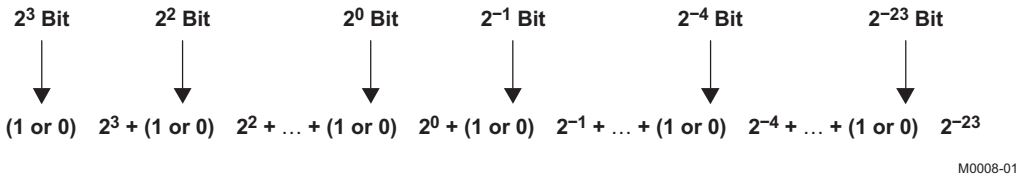


**Figure 29. Conversion Weighting Factors—5.23 Format to Floating Point**

Gain coefficients, entered via the I$^2$C bus, must be entered as 32-bit binary numbers. The format of the 32-bit number (4-byte or 8-digit hexadecimal number) is shown in Figure 30.

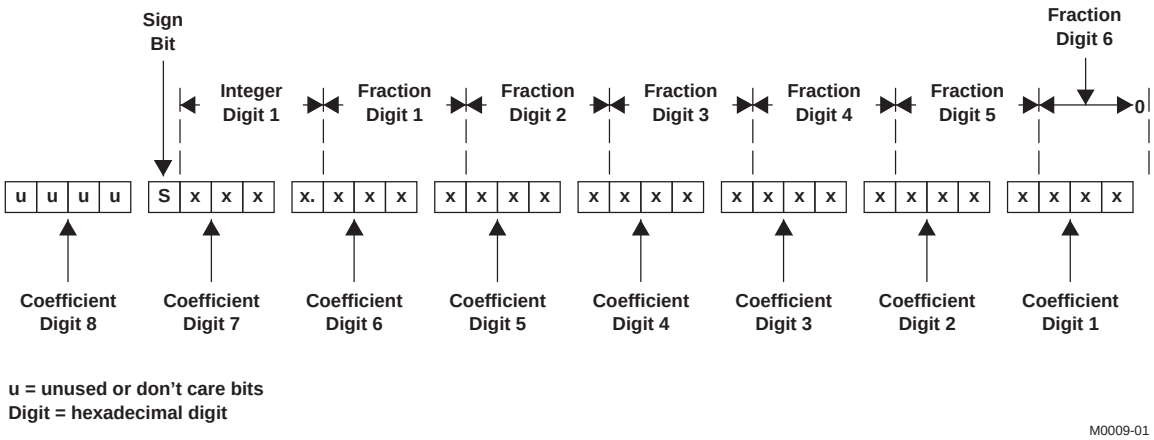


**Figure 30. Alignment of 5.23 Coefficient in 32-Bit I$^2$C Word**

As Figure 30 shows, the hexadecimal (hex) value of the integer part of the gain coefficient cannot be concatenated with the hex value of the fractional part of the gain coefficient to form the 32-bit I$^2$C coefficient. The reason is that the 28-bit coefficient contains 5 bits of integer, and thus the integer part of the coefficient occupies all of one hex digit and the most significant bit of the second hex digit. In the same way, the fractional part occupies the lower three bits of the second hex digit, and then occupies the other five hex digits (with the eighth digit being the zero-valued most significant hex digit).

### *7.4.10.3 TAS5548 Audio Processing*

The TAS5548 digital audio processing is designed so that noise produced by filter operations is maintained below the smallest signal amplitude of interest, as shown in Figure 31. The device achieves this low noise level by increasing the precision of the signal representation substantially above the number of bits that are absolutely necessary to represent the input signal.

Similarly, the TAS5548 carries additional precision in the form of overflow bits to permit the value of intermediate calculations to exceed the input precision without clipping. The TAS5548's advanced digital audio processor achieves both of these important performance capabilities by using a high-performance digital audio-processing architecture with a 32-bit data path, 28-bit filter coefficients, and a 60-bit accumulator.

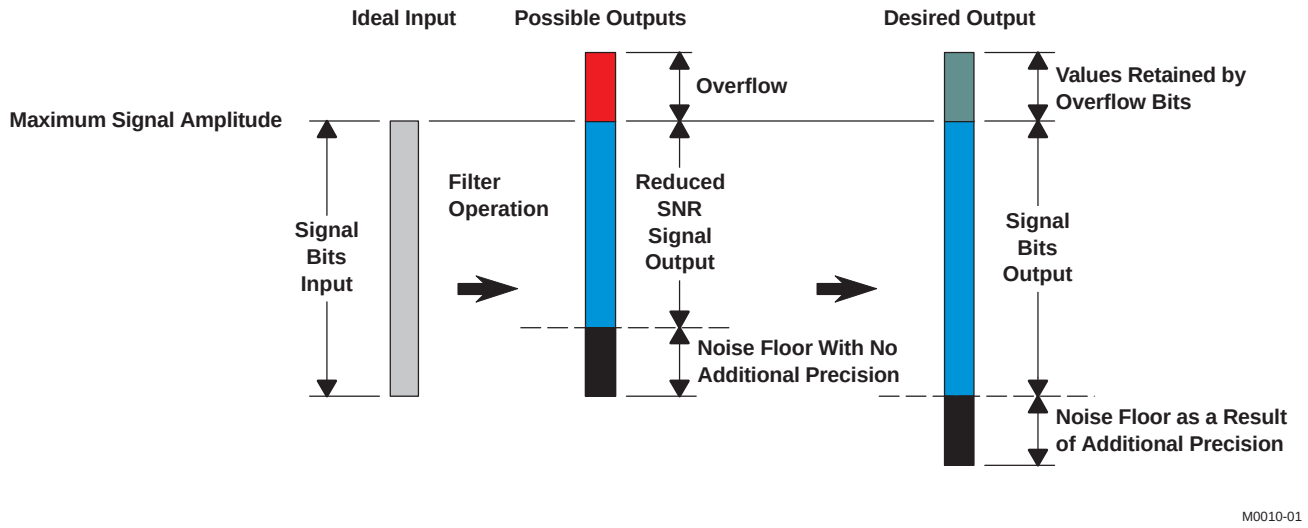


**Figure 31. TAS5548 Digital Audio Processing**

### 7.4.11 Input Crossbar Mixer

The TAS5548 has a full 10×8 input crossbar mixer. This mixer permits each signal-processing channel input to be any mix of any of the eight input channels, as shown in Figure 32. The control parameters for the input crossbar mixer are programmable via the I$^2$C interface. See *Input Mixer Registers, Channels 1–8 (0x41–0x48)* for more information.

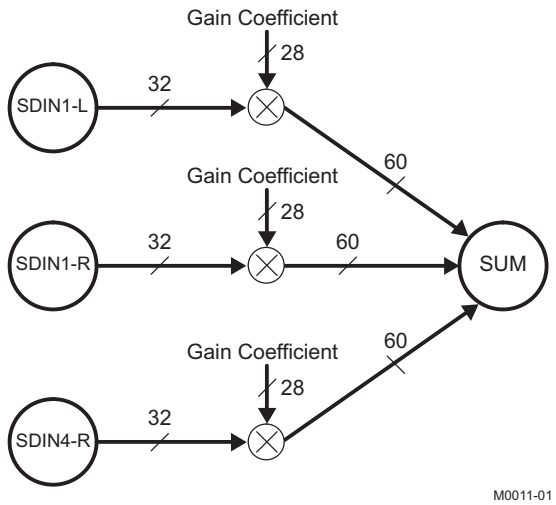


**Figure 32. Input Crossbar Mixer**

### 7.4.12 Biquad Filters

For 32-kHz to 96-kHz data, the TAS5548 provides 56 biquads across the eight channels (seven per channel).

For 176.4-kHz and 192-kHz data, the TAS5548 has 22 biquads with channels 1 and 2 having 5 biquads each, and channels 7 and 8 having 6 biquads each.

The direct form I structure provides a separate delay element and mixer (gain coefficient) for each node in the biquad filter. Each mixer output is a signed 60-bit product of a signed 32-bit data sample (9.23 format number) and a signed 28-bit coefficient (5.23 format number), as shown in Figure 33. The 60-bit ALU in the TAS5548 allows the 60-bit resolution to be retained when summing the mixer outputs (filter products). All of the biquad filters are second-order direct form I structure.

The five 28-bit coefficients for the each of the 56 biquads are programmable via the I$^2$C interface. See Table 7.


Copyright © 2012–2015, Texas Instruments Incorporated

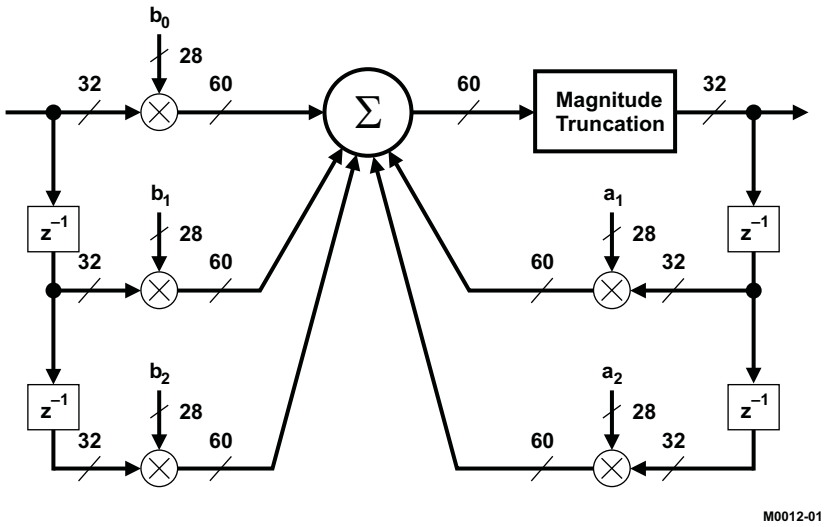


**Figure 33. Biquad Filter Structure**

All five coefficients for one biquad filter structure are written to one I$^2$C register containing 20 bytes (or five 32-bit words). The structure is the same for all biquads in the TAS5548. Registers 0x51–0x88 show all the biquads in the TAS5548. Note that u[31:28] bits are unused and default to 0x0.

**Table 7. Contents of One 20-Byte Biquad Filter Register (Default = All-Pass)**

| DESCRIPTION | REGISTER FIELD CONTENTS | INITIALIZATION GAIN COEFFICIENT VALUE | |
|---|---|---|---|
| | | DECIMAL | HEX |
| $b_0$ coefficient | u[31:28], b0[27:24], b0[23:16], b0[15:8], b0[7:0] | **1.0** | **0x00, 0x80, 0x00, 0x00** |
| $b_1$ coefficient | u[31:28], b1[27:24], b1[23:16], b1[15:8], b1[7:0] | 0.0 | 0x00, 0x00, 0x00, 0x00 |
| $b_2$ coefficient | u[31:28], b2[27:24], b2[23:16], b2[15:8], b2[7:0] | 0.0 | 0x00, 0x00, 0x00, 0x00 |
| $a_1$ coefficient | u[31:28], a1[27:24], a1[23:16], a1[15:8], a1[7:0] | 0.0 | 0x00, 0x00, 0x00, 0x00 |
| $a_2$ coefficient | u[31:28], a2[27:24], a2[23:16], a2[15:8], a2[7:0] | 0.0 | 0x00, 0x00, 0x00, 0x00 |

### 7.4.13 Bass and Treble Controls

In post-SRC 96kHz processing mode, the TAS5548 has four bass and treble tone control groups. Each control has a ±18-dB control range with selectable corner frequencies and second-order slopes. These controls operate four channel groups:

- L, R, and C (channels 1, 2, and 7)
- LS, RS (channels 3 and 4)
- LBS, RBS (alternatively called L and R lineout) (channels 5 and 6)
- Sub (channel 8)

For post-SRC 192-kHz data, the TAS5548 has two bass and treble tone controls. Each control has a ±18-dB I$^2$C control range with selectable corner frequencies and second-order slopes. These controls operate two channel groups:

- L, R and C
- Sub
  - Sub only has bass and no treble.

The bass and treble filters use a soft update rate that does not produce artifacts during adjustment.

**Table 8. Bass and Treble Filter Selections**

| $f_S$ (kHz) | 3-dB CORNER FREQUENCIES, Hz | | | | | | | | | |
|---|---|---|---|---|---|---|---|---|---|---|
| | FILTER SET 1 | | FILTER SET 2 | | FILTER SET 3 | | FILTER SET 4 | | FILTER SET 5 | |
| | BASS | TREBLE | BASS | TREBLE | BASS | TREBLE | BASS | TREBLE | BASS | TREBLE |
| 88.2 | 115 | 2527 | 230 | 5053 | 345 | 8269 | 402 | 10106 | 459 | 11944 |
| 96 | 125 | 2750 | 250 | 5500 | 375 | 9000 | 438 | 11000 | 500 | 13000 |
| 176.4 | 230 | 5053 | 459 | 10106 | 689 | 16538 | 804 | 20213 | 919 | 23888 |
| 192 | 250 | 5500 | 500 | 11000 | 750 | 18000 | 875 | 22000 | 1000 | 26000 |

The $I^2C$ registers that control bass and treble are:

- Bass and treble bypass register (0x89–0x90, channels 1–8)
- Bass and treble slew rates (0xD0)
- Bass filter sets 1–5 (0xDA)
- Bass filter index (0xDB)
- Treble filter sets 1–5 (0xDC)
- Treble filter index (0xDD)

**NOTE**

The bass and treble bypass registers (0x89–0x90) are defaulted to the bypass mode. In order to use the bass and treble, these registers must be in the inline (or enabled) mode for each channel using bass and treble.

### 7.4.14 Volume, Automute, and Mute

The TAS5548 provides individual channel and master volume controls. Each control provides an adjustment range of 18 dB to –127 dB in 0.25-dB increments. This permits a total volume device control range of 36 dB to –127 dB plus mute. The master volume control can be configured to control six or eight channels.

The TAS5548 has a master soft mute control that can be enabled by a terminal or $I^2C$ command. The device also has individual channel soft mute controls that are enabled via $I^2C$.

### 7.4.15 Loudness Compensation

The loudness compensation function compensates for the Fletcher-Munson loudness curves. The TAS5548 loudness implementation tracks the volume control setting to provide spectral compensation for weak low- or high-frequency response at low volume levels. For the volume tracking function, both linear and logarithmic control laws can be implemented. Any biquad filter response can be used to provide the desired loudness curve. The control parameters for the loudness control are programmable via the $I^2C$ interface.

The TAS5548 has a single set of loudness controls for the eight channels. In 6-channel mode, loudness is available to the six speaker outputs and also to the line outputs. The loudness control input uses the maximum individual master volume (V) to control the loudness that is applied to all channels. In the 192-kHz and 176.4-kHz modes, the loudness function is active only for channels 1, 2, and 8.


Copyright © 2012–2015, Texas Instruments Incorporated

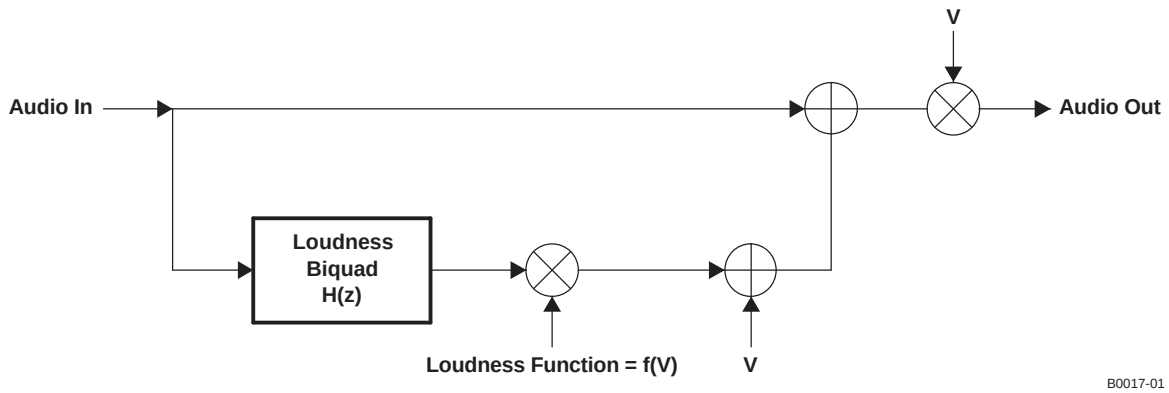


**Figure 34. Loudness Compensation Functional Block Diagram**

Loudness function = f(V) = G × $[2^{(\text{Log } V) \times LG + LO}]$ + O or alternatively,

Loudness function = f(V) = G × $[V^{LG} \times 2^{LO}]$ + O

For example, for the default values LG = –0.5, LO = 0, G = 1, and O = 0, then:

Loudness function = 1/SQRT(V), which is the recommended transfer function for loudness. So,

Audio out = (audio in) × V + H(Z) × SQRT(V). Other transfer functions are possible.

**Table 9. Default Loudness Compensation Parameters**

| LOUDNESS TERM | DESCRIPTION | USAGE | DATA FORMAT | $I^2C$ SUB-ADDRESS | DEFAULT | |
|---|---|---|---|---|---|---|
| | | | | | HEX | FLOAT |
| V | Max volume | Gains audio | 5.23 | NA | NA | NA |
| Log V | $Log_2$ (max volume) | Loudness function | 5.23 | NA | 0000 0000 | 0.0 |
| H(Z) | Loudness biquad | Controls shape of loudness curves | 5.23 | 0x95 | $b_0$ = 0000 D513<br>$b_1$ = 0000 0000<br>$b_2$ = 0FFF 2AED<br>$a_1$ = 00FE 5045<br>$a_2$ = 0F81 AA27 | $b_0$ = 0.006503<br>$b_1$ = 0<br>$b_2$ = –0.006503<br>$a_1$ = 1.986825<br>$a_2$ = –0.986995 |
| LG | Gain (log space) | Loudness function | 5.23 | 0x91 | FFC0 0000 | –0.5 |
| LO | Offset (log space) | Loudness function | 9.23 | 0x92 | 0000 0000 | 0 |
| G | Gain | Switch to enable loudness (ON = 1, OFF = 0) | 5.23 | 0x93 | 0000 0000 | 0 |
| O | Offset | Provides offset | 9.23 | 0x94 | 0000 0000 | 0 |

### *7.4.15.1 Loudness Example*

Problem: Due to the Fletcher-Munson phenomena, compensation for low-frequency attenuation near 60 Hz is desirable. The TAS5548 provides a loudness transfer function with EQ gain = 6, EQ center frequency = 60 Hz, and EQ bandwidth = 60 Hz.

Solution: Using Texas Instruments TAS5548 GUI tool (downloadable from ti.com), Matlab™, or other signal-processing tool, develop a loudness function with the parameters listed in Table 10.

**Table 10. Example Loudness Function Parameters**

| LOUDNESS TERM | DESCRIPTION | USAGE | DATA FORMAT | I²C SUB-ADDRESS | EXAMPLE | |
|---|---|---|---|---|---|---|
| | | | | | HEX | FLOAT |
| H(Z) | Loudness biquad | Controls shape of loudness curves | 5.23 | 0x95 | $b_0$ = 0000 8ACE<br>$b_1$ = 0000 0000<br>$b_2$ = FFFF 7532<br>$a_1$ = FF01 1951<br>$a_2$ = 007E E914 | $b_0$ = 0.004236<br>$b_1$ = 0<br>$b_2$ = –0.004236<br>$a_1$ = –1.991415<br>$a_2$ = 0.991488 |
| LG | Loudness gain | Loudness function | 5.23 | 0x91 | FFC0 0000 | –0.5 |
| LO | Loudness offset | Loudness function | 9.23 | 0x92 | 0000 0000 | 0 |
| G | Gain | Switch to enable loudness (ON = 1, OFF = 0) | 5.23 | 0x93 | 0080 0000 | 1 |
| O | Offset | Offset | 9.23 | 0x94 | 0000 0000 | 0 |

See Figure 35 for the resulting loudness function at different gains.

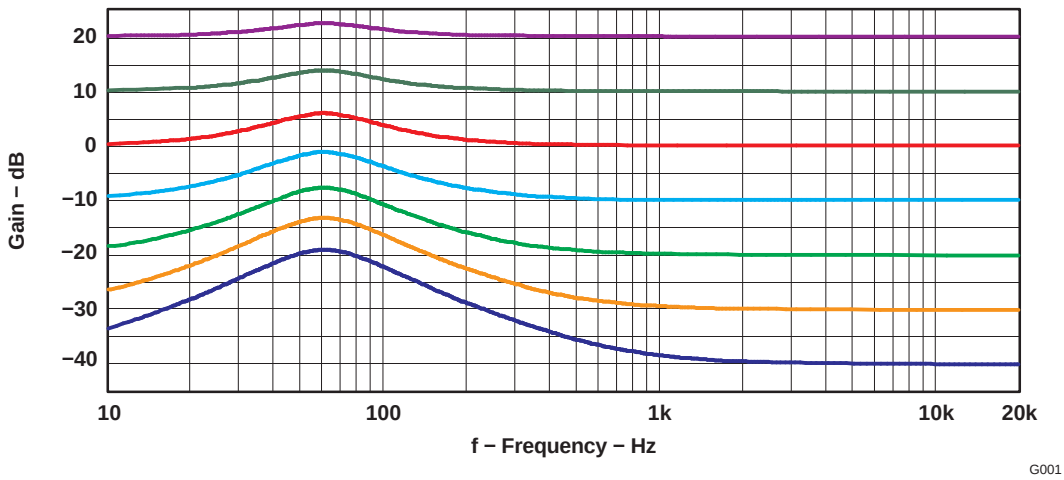


**Figure 35. Loudness Example Plots**

### 7.4.16 Dynamic Range Control (DRC)

DRC provides both compression and expansion capabilities over three separate and definable regions of audio signal levels. Programmable threshold levels set the boundaries of the three regions. Within each of the three regions, a distinct compression or expansion transfer function can be established and the slope of each transfer function is determined by programmable parameters. The offset (boost or cut) at the two boundaries defining the three regions can also be set by programmable offset coefficients. The DRC implements the composite transfer function by computing a 5.23-format gain coefficient from each sample output from the rms estimator. This gain coefficient is then applied to a mixer element, whose other input is the audio data stream. The mixer output is the DRC-adjusted audio data.

The TAS5548 has two distinct DRC blocks. DRC1 services channels 1–7 in the 8-channel mode and channels 1–4 and 7 in the 6-channel mode. This DRC computes rms estimates of the audio data streams on all channels that it controls. The estimates are then compared on a sample-by-sample basis and the larger of the estimates is used to compute the compression/expansion gain coefficient. The gain coefficient is then applied to the appropriate channel audio streams. DRC2 services only channel 8. This DRC also computes an rms estimate of the signal level on channel 8 and this estimate is used to compute the compression/expansion gain coefficient applied to the channel-8 audio stream.

All of the TAS5548 default values for DRC can be used except for the DRC1 decay and DRC2 decay. Table 11 shows the recommended time constants and their hex values. If the user wants to implement other DRC functions, Texas Instruments recommends using the GUI available from Texas Instruments. The tool allows the user to select the DRC transfer function graphically. It then outputs the TAS5548 hex coefficients for download to the TAS5548.


Copyright © 2012–2015, Texas Instruments Incorporated

**Table 11. DRC Recommended Changes From TAS5548 Defaults**

| I²C SUBADDRESS | REGISTER FIELDS | RECOMMENDED TIME CONSTANT (ms) | RECOMMENDED HEX VALUE | DEFAULT HEX | DEFAULT TIME CONSTANT (ms) |
|---|---|---|---|---|---|
| 0x98 | DRC1 energy | 5 | 0000 883F | 0000 883F | |
| | DRC1 (1 – energy) | | 007F 77C0 | 007F 77C0 | |
| 0x9C | DRC1 attack | 5 | 0000 883F | 0000 883F | |
| | DRC1 (1 – attack) | | 007F 77C0 | 007F 77C0 | |
| | DRC1 decay | 2 | 0001 538F | 0000 0056 | |
| | DRC1 (1 – decay) | | 007E AC70 | 003F FFA8 | |
| 0x9D | DRC2 energy | 5 | 0000 883F | 0000 883F | |
| | DRC2 (1 – energy) | | 007F 77C0 | 007F 77C0 | |
| 0xA1 | DRC2 attack | 5 | 0000 883F | 0000 883F | |
| | DRC2 (1 – attack) | | 007F 77C0 | 007F 77C0 | |
| | DRC2 decay | 2 | 0001 538F | 0000 0056 | |
| | DRC2 (1 – decay) | | 007E AC70 | 003F FFA8 | |

Recommended DRC setup flow if the defaults are used:

- After power up, load the recommended hex value for DRC1 and DRC2 decay and (1 – decay). See Table 11.
- Enable either the pre-volume or post-volume DRC using I²C registers 0x96 and 0x97. Note that to avoid a potential timing problem, there is a 10-ms delay between a write to 0x96 and a write to 0x97.

Recommended DRC setup flow if the DRC design uses values different from the defaults:

- After power up, load all DRC coefficients per the DRC design.
- Enable either the pre-volume or post-volume DRC. Note that to avoid a potential timing problem, there is a 10-ms delay between a write to 0x96 and a write to 0x97.

Figure 36 shows the positioning of the DRC block in the TAS5548 processing flow. As seen, the DRC input can come either before or after soft volume control and loudness processing.

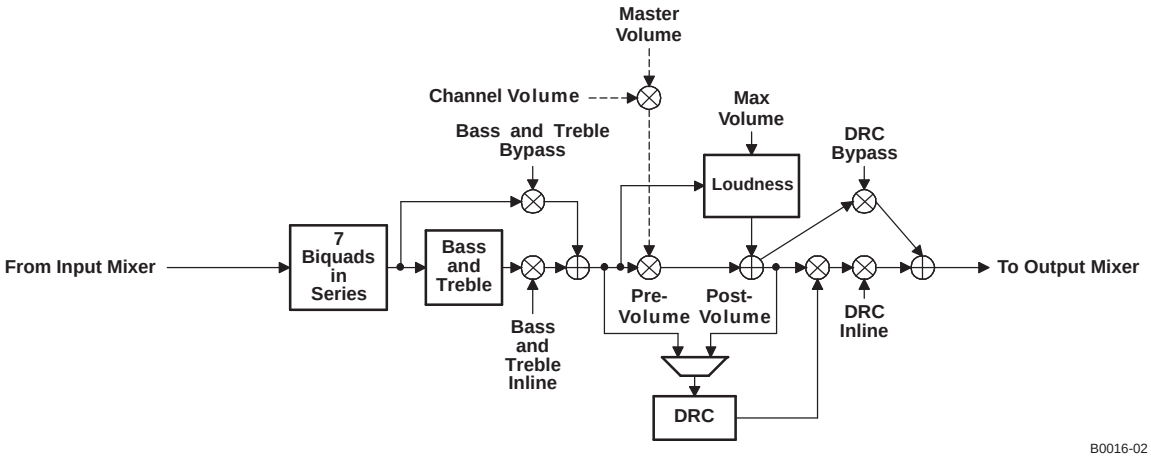


**Figure 36. DRC Positioning in TAS5548 Processing Flow**

Figure 37 illustrates a typical DRC transfer function.

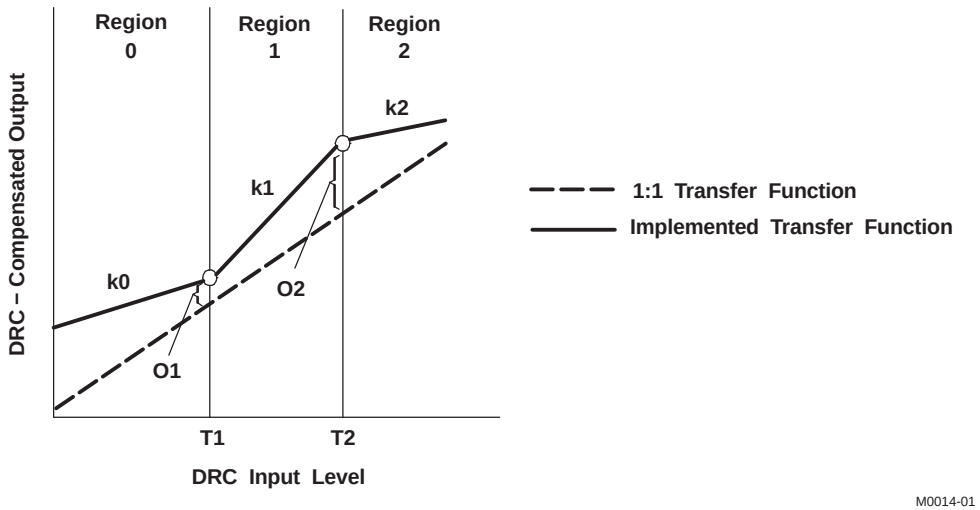


**Figure 37. Dynamic Range Compression (DRC) Transfer Function Structure**

The three regions shown in Figure 37 are defined by three sets of programmable coefficients:

- Thresholds T1 and T2 define region boundaries.
- Offsets O1 and O2 define the DRC gain coefficient settings at thresholds T1 and T2, respectively.
- Slopes k0, k1, and k2 define whether compression or expansion is to be performed within a given region. The magnitudes of the slopes define the degree of compression or expansion to be performed.

The three sets of parameters are all defined in logarithmic space and adhere to the following rules:

- The maximum input sample into the DRC is referenced at 0 dB. All values below this maximum value then have negative values in logarithmic (dB) space.
- Thresholds T1 and T2 define, in dB, the boundaries of the three regions of the DRC, as referenced to the rms value of the data into the DRC. Zero-valued threshold settings reference the maximum-valued rms input into the DRC and negative-valued thresholds reference all other rms input levels. Positive-valued thresholds have no physical meaning and are not allowed. In addition, zero-valued threshold settings are not allowed.

**CAUTION**

**Zero-valued and positive-valued threshold settings are not allowed and cause unpredictable behavior if used.**

- Offsets O1 and O2 define, in dB, the attenuation (cut) or gain (boost) applied by the DRC-derived gain coefficient at the threshold points T1 and T2, respectively. Positive offsets are defined as cuts, and thus boost or gain selections are negative numbers. Offsets must be programmed as 32-bit (9.23 format) numbers.
- Slopes k0, k1, and k2 define whether compression or expansion is to be performed within a given region, and the degree of compression or expansion to be applied. Slopes are programmed as 28-bit (5.23 format) numbers.

#### *7.4.16.1 DRC Implementation*

The three elements comprising the DRC include: (1) an rms estimator, (2) a compression/expansion coefficient computation engine, and (3) an attack/decay controller.

- RMS estimator—This DRC element derives an estimate of the rms value of the audio data stream into the DRC. For the DRC block shared by Ch1 and Ch2, two estimates are computed—an estimate of the Ch1 audio data stream into the DRC, and an estimate of the Ch2 audio data stream into the DRC. The outputs of the two estimators are then compared, sample-by-sample, and the larger-valued sample is forwarded to the compression/expansion coefficient computation engine.

  Two programmable parameters, ae and (1 – ae), set the effective time window over which the rms estimate is


Copyright © 2012–2015, Texas Instruments Incorporated

made. For the DRC block shared by Ch1 and Ch2, the programmable parameters apply to both rms estimators. The time window over which the rms estimation is computed can be determined by:

$$t_{window} = \frac{-1}{f_S \ \ln(1 - ae)}$$

A. Care should be taken when calculating the time window for 192kHz content. Please use 96kHz as the sampling frequency for 96kHz AND 192kHz, as the TAS5548 uses a digital decimator to do all DAP processing at 96kHz.

B. ae = energy time (1)

- Compression/expansion coefficient computation—This DRC element converts the output of the rms estimator to a logarithmic number, determines the region where the input resides, and then computes and outputs the appropriate coefficient to the attack/decay element. Seven programmable parameters, T1, T2, O1, O2, k0, k1, and k2, define the three compression/expansion regions implemented by this element.
- Attack/decay control—This DRC element controls the transition time of changes in the coefficient computed in the compression/expansion coefficient computation element. Four programmable parameters define the operation of this element. Parameters ad and (1 – ad) set the decay or release time constant to be used for volume boost (expansion). Parameters aa and (1 – aa) set the attack time constant to be used for volume cuts. The transition time constants can be determined by:

$$t_a = \frac{-1}{f_S \ \ln(1 - aa)} \qquad t_d = \frac{-1}{f_S \ \ln(1 - ad)}$$

C. aa = attack time

D. ad - decay time (2)

#### *7.4.16.2 Compression/Expansion Coefficient Computation Engine Parameters*

Seven programmable parameters are assigned to each DRC block: two threshold parameters—T1 and T2, two offset parameters—O1 and O2, and three slope parameters—k0, k1, and k2. The threshold parameters establish the three regions of the DRC transfer curve, the offsets anchor the transfer curve by establishing known gain settings at the threshold levels, and the slope parameters define whether a given region is a compression or an expansion region.

T2 establishes the boundary between the high-volume region and the mid-volume region. T1 establishes the boundary between the mid-volume region and the low-volume region. Both thresholds are set in logarithmic space, and which region is active for any given rms estimator output sample is determined by the logarithmic value of the sample.

Threshold T2 serves as the fulcrum or pivot point in the DRC transfer function. O2 defines the boost (> 0 dB) or cut (< 0 dB) implemented by the DRC-derived gain coefficient for an rms input level of T2. If O2 = 0 dB, the value of the derived gain coefficient is 1 (0x0080 0000 in 5.23 format). k2 is the slope of the DRC transfer function for rms input levels above T2, and k1 is the slope of the DRC transfer function for rms input levels below T2 (and above T1). The labeling of T2 as the fulcrum stems from the fact that there cannot be a discontinuity in the transfer function at T2. The user can, however, set the DRC parameters to realize a discontinuity in the transfer function at the boundary defined by T1. If no discontinuity is desired at T1, the value for the offset term O1 must obey the following equation.

$$O1_{\text{No Discontinuity}} = |T1 - T2| \times k1 + O2 \quad \text{For } ( |T1| \geq |T2| ) \tag{3}$$

T1 and T2 are the threshold settings in dB, k1 is the slope for region 1, and O2 is the offset in dB at T2. If the user chooses to select a value of O1 that does not obey the above equation, a ×discontinuity at T1 is realized.

Decreasing in volume from T2, the slope k1 remains in effect until the input level T1 is reached. If, at this input level, the offset of the transfer function curve from the 1 : 1 transfer curve does not equal O1, there is a discontinuity at this input level as the transfer function is snapped to the offset called for by O1. If no discontinuity is wanted, O1 and/or k1 must be adjusted so that the value of the transfer curve at input level T1 is offset from the 1 : 1 transfer curve by the value O1. The examples that follow illustrate both continuous and discontinuous transfer curves at T1.

Decreasing in volume from T1, starting at offset level O1, slope k0 defines the compression/expansion activity in the lower region of the DRC transfer curve.

#### 7.4.16.2.1 Threshold Parameter Computation

For thresholds,

$$T_{dB} = -6.0206T_{INPUT} = -6.0206T_{SUB_ADDRESS_ENTRY}$$

If, for example, it is desired to set T1 = –64 dB, then the subaddress entry required to set T1 to –64 dB is:

$$T1_{SUB_ADDRESS_ENTRY} = \frac{-64}{-6.0206} = 10.63$$

T1 is entered as a 32-bit number in 9.23 format. Therefore:

$$T1 = 10.63 = 0\ 1010.1010\ 0001\ 0100\ 0111\ 1010\ 111$$
$$= 0x0550\ A3D7 \text{ in 9.23 format}$$

#### 7.4.16.2.2 Offset Parameter Computation

The offsets set the boost or cut applied by the DRC-derived gain coefficient at the threshold point. An equivalent statement is that offsets represent the departure of the actual transfer function from a 1 : 1 transfer at the threshold point. Offsets are 9.23 Formatted, 32bit logarithmic numbers. They are computed by the following equation:

$$O_{INPUT} = \frac{O_{DESIRED} + 24.0824\text{ dB}}{6.0206}$$

Gains or boosts are represented as negative numbers; cuts or attenuations are represented as positive numbers. For example, to achieve a boost of 21 dB at threshold T1, the $I^2C$ coefficient value entered for O1 must be:

$$O1_{INPUT} = \frac{-21\text{ dB} + 24.0824\text{ dB}}{6.0206} = 0.51197555$$
$$= 0.1000_0011_0001_1101_0100$$
$$= 0x0041886A \text{ in 9.23 format}$$

#### 7.4.16.2.3 Slope Parameter Computation

In developing the equations used to determine the subaddress of the input value required to realize a given compression or expansion within a given region of the DRC, the following convention is adopted.

DRC transfer = Input increase : Output increase

If the DRC realizes an output increase of n dB for every dB increase in the rms value of the audio into the DRC, a 1 : n expansion is being performed. If the DRC realizes a 1-dB increase in output level for every n-dB increase in the rms value of the audio into the DRC, an n : 1 compression is being performed.

$$k = n - 1$$

For n : 1 compression, the slope k can be found by: $k = \frac{1}{n} - 1$

In both expansion (1 : n) and compression (n : 1), n is implied to be greater than 1. Thus, for expansion:

$k = n - 1$ means $k > 0$ for $n > 1$. Likewise, for compression, $k = \frac{1}{n} - 1$ means $-1 < k < 0$ for $n > 1$. Thus, it appears that k must always lie in the range $k > -1$.

The DRC imposes no such restriction and k can be programmed to values as negative as –15.999. To determine what results when such values of k are entered, it is first helpful to note that the compression and expansion equations for k are actually the same equation. For example, a 1 : 2 expansion is also a 0.5 : 1 compression.

$$0.5 : 1 \text{ compression} \rightarrow k = \frac{1}{0.5} - 1 = 1$$

$$1 : 2 \text{ expansion} \rightarrow k = 2 - 1 = 1$$


Copyright © 2012–2015, Texas Instruments Incorporated

As can be seen, the same value for k is obtained either way. The ability to choose values of k less than –1 allows the DRC to implement negative-slope transfer curves within a given region. Negative-slope transfer curves are usually not associated with compression and expansion operations, but the definition of these operations can be expanded to include negative-slope transfer functions. For example, if k = –4

$$\text{Compression equation: } k = -4 = \frac{1}{n} - 1 \rightarrow n = -\frac{1}{3} \rightarrow -0.3333 : 1 \text{ compression}$$

$$\text{Expansion equation: } k = -4 = n - 1 \rightarrow n = -3 \rightarrow 1 : -3 \text{ expansion}$$

With k = –4, the output decreases 3 dB for every 1 dB increase in the rms value of the audio into the DRC. As the input increases in volume, the output decreases in volume.

### 7.4.17 THD Manager

The THD manager is designed to set the max output level target after all processing has been completed. The Audio clip engages at +24dB between (pre) and (post) stage. 10% distortion occurs when audio is clipping approx +2.4 to 3dB over full scale. There is amplitude loss when clipping, so THD(post) might allow slight gain through THD manager. 10% distortion clipping will account for approx -1dB of output level loss. This is accounted for as seen with +1dB in step 2 to set output level +0dB

Example setup to modify 10% THD output level: * note that coefficient calculations are approximate for simplicity

1. Signal path settings
   - Input -10dBFS
   - Volume 0xD9 0000 000C +15dB
   - THD Manager (pre) 0xE9 0650 0000 +22dB
   - THD Manager (post) 0xEA 0006 7000 -26dB
2. resulting output
   - output clipping at 10% distortion with output level +0dB
   - input -10 vol +15 THD(pre) +22 THD(post) -26
   - -10 +5 +27(clip) +1
3. Begin clipping at -12dBFS input with +0dB output level
   - THD Manager (pre) 0xE9 07FF FFFF +24dB (previous setting +22dB + 2dB)
   - result: input -12dBFS output clipping at 10% distortion with output level +0dB
   - input -12 vol +15 THD(pre) +24 THD(post) -26
   - -12 +3 +27(clip) +1
4. Begin clipping at -12dBFS input with -10dB output
   - THD Manager (post) 0xEA 0002 0000 -36dB (previous setting -26dB -10dB)
   - result: input -12dBFS output clipping at 10% distortion with output level +0dB
   - input -12 vol +15 THD(pre) +24 THD(post) -36
   - -12 +3 +27(clip) -9

Copyright © 2012–2015, Texas Instruments Incorporated

### 7.4.18 Downmix Algorithm and I2S Out

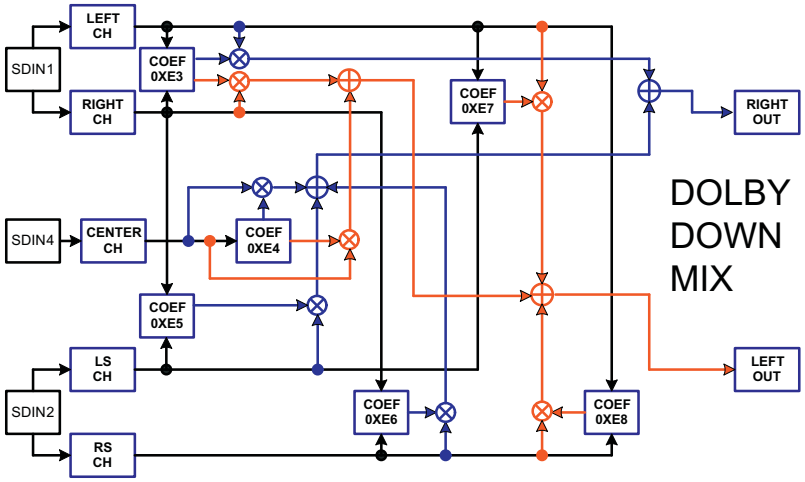


**Figure 38. Dolby Downmix**

The TAS5548 has an excellent feature that can mix the input signals to create a downmix to make the I2S serial output which has an SRC that keeps output sample rate at 48KHz irrespective of input sample rate.

Downmix registers are defined as follows:

0xE3 == Coefficient for L and R channels
0xE4 == Coefficient for Center channel
0xE5 == Coefficient for LS for R_out
0xE6 == Coefficient for Rs for R_out
0xE7 == Coefficient for Ls for L_out
0xE8 == Coefficient for Rs for L_out

$$L_out = E3 \times L + E4 \times C + E7 \times Ls + E8 \times Rs$$
$$R_out = E3 \times R + E4 \times C + E5 \times Ls + E6 \times Rs$$

L, R, C, Ls, Rs are input cross bar mixer outputs. L, R, C, Ls, Rs are defined as the output of input mixers. L = Ch1, R = Ch2, C = Ch8, Ls = Ch3, Rs = Ch4, use input mixer to mix any other channels to I2S Out. (4)

Input Mixers also can be used as other mixers to mix subwoofer channels to $I^2S$ out.

By default $I^2S$ out has the following values:

$$L_out = \frac{(L + 0.707 \times C - 0.707 \times Ls - 0.707 \times Rs)}{3.121}$$
$$R_out = \frac{(R + 0.707 \times C - 0.707 \times Ls - 0.707 \times Rs)}{3.121}$$

(5)

### 7.4.19 Stereo Downmixes/(or Fold-Downs)

#### *7.4.19.1 Left Total/Right Total (Lt/Rt)*

Lt/Rt is a downmix suitable for decoding with a Dolby Pro Logic upmixer to obtain 5.1 channels again. Lt/Rt is also suitable for stereophonic sound playback on a hi-fi or on headphones.


Copyright © 2012–2015, Texas Instruments Incorporated

$$Lt = L + -3dB \times C + -3dB \times (-Ls - Rs)$$

$$Rt = R + -3dB \times C + -3dB \times (Ls + Rs)$$

where Ls and Rs are phase shifted 90° (6)

#### *7.4.19.2 Left Only/Right Only (Lo/Ro)*

Lo/Ro is a downmix suitable when mono compatibility is required. Lo/Ro destroys front/rear channel separation information and thus a Dolby Pro Logic upmixer will not be able to properly extract 5.1 channels again.

$$Lo = L + -3dB \times C + att \times Ls$$

$$Ro = R + -3dB \times C + att \times Rs$$

where att = –3 dB, –6 dB, –9 dB or 0 dB (7)

### 7.4.20 Output Mixer

The TAS5548 provides an 8×2 output mixer for channels 1, 2, 3, 4, 5, and 6. For channels 7 and 8, the TAS5548 provides an 8×3 output mixer. These mixers allow each output to be any mix of any two (or three) signal-processed channels. The control parameters for the output crossbar mixer are programmable via the $I^2C$ interface. All of the TAS5548 features are available when the 8×2 and 8×3 output mixers are configured in the pass-through output mixer configuration, where the audio data from each DAP channel maps directly to the corresponding PWM channel (that is, DAP channel 1 to PWM channel 1, and so on).

When mixing or remapping DAP channels to different PWM output channels there are limitations to consider:

- Individual channel mute should not be used.
- The sum of the minimum channel volume and master volume should not be below –109 dB.

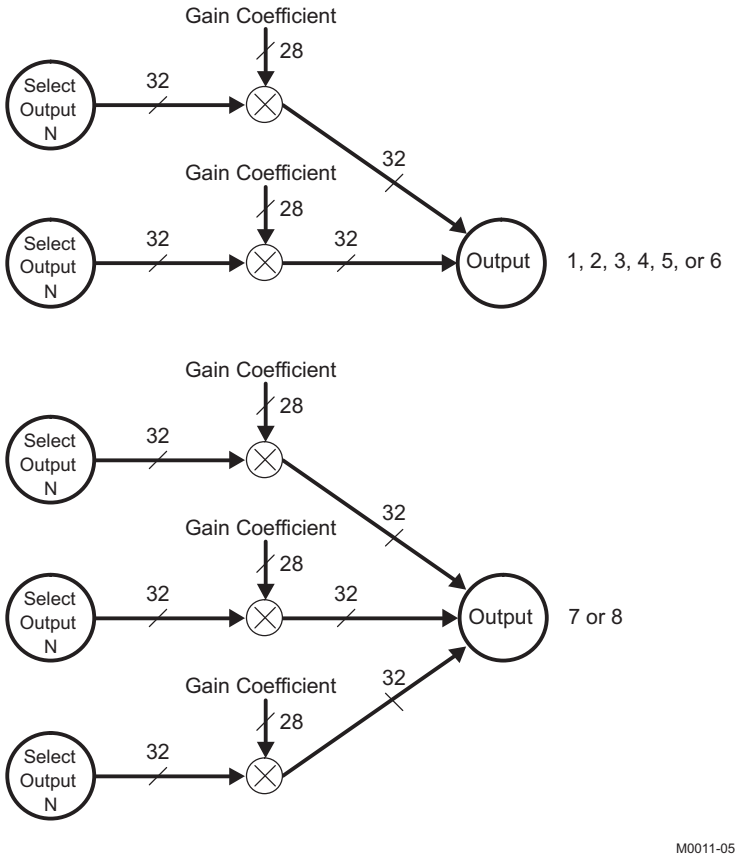


**Figure 39. Output Mixers**

### 7.4.21 Device Configuration Controls

The TAS5548 provides a number of system configuration controls that can be set at initialization and set following a reset.

- Channel configuration
- Headphone configuration
- Audio system configurations
- Recovery from clock error
- Power-supply volume-control enable
- Volume and mute update rate
- Modulation index limit
- Master-clock and data-rate controls
- Bank controls

#### *7.4.21.1 Channel Configuration*

These registers control the TAS5548 response to back end errors.

**Table 12. Description of the Channel Configuration Registers (0x05 to 0x0C)**

| BIT | DESCRIPTION |
|---|---|
| D7 | Enable/disable error recovery sequence. In case the $\overline{\text{BKND_ERR}}$ pin is pulled low, this register determines if this channel is to follow the error recovery sequence or to continue with no interruption. |
| D6 | Reserved |
| D5 | Reserved |
| D4 | Inverts the PWM output. Inverting the PWM output can be an advantage if the power stage input pin is opposite the TAS5548 PWM pinout. This makes routing on the PCB easier. To keep the phase of the output, the speaker terminals must also be inverted. |
| D3 | Reserved |
| D2 | Reserved |
| D1 | Reserved |
| D0 | Reserved |

#### *7.4.21.2 Headphone Configuration Registers*

The headphone configuration controls are identical to the speaker configuration controls. The headphone configuration control settings are used in place of the speaker configuration control settings for channels 1 and 2 when the headphones are selected. However, only one configuration setting for headphones is used, and it is the default setting, that is, in headphone mode 0x05 and 0x06 settings are fixed in default.

#### *7.4.21.3 Audio System Configurations*

The TAS5548 can be configured to comply with various audio systems: 5.1-channel system, 6-channel system, 7.1-channel system, and 8-channel system.

The audio system configuration is set in the general control register (0xE0). Bits D31–D4 must be zero and D0 is *do not care*.

D3 Must always be 0 (default). Note that subwoofer cannot be used as lineout when PSVC is enabled. (D3 is a write-only bit)

D2 Enables/disables power-supply volume control

D1 Sets number of speakers in the system, including possible line outputs

D3–D1 must be configured for the audio system in the application, as shown in Table 13.


Copyright © 2012–2015, Texas Instruments Incorporated

**Table 13. Audio System Configuration (General Control Register 0xE0)**

| Audio System | D31–D4 | D3 | D2 | D1 | D0 |
|---|---|---|---|---|---|
| 6 channels or 5.1 not using PSVC | 0 | 0 | 0 | 1 | X |
| 6 channels using PSVC | 0 | 0 | 1 | 1 | X |
| 5.1 system using PSVC | 0 | 0 | 1 | 1 | X |
| **8 channels or 7.1 not using PSVC (default)** | **0** | **0** | **0** | **0** | **X** |
| 8 channels using PSVC | 0 | 0 | 1 | 0 | X |
| 7.1 system using PSVC | 0 | 0 | 1 | 0 | X |

#### 7.4.21.3.1 Using Line Outputs in 6-Channel Configurations

The audio system can be configured for a 6-channel configuration (with 2 lineouts) by writing a 1 to bit D1 of register 0xE0 (general control register). In this configuration, channel-5 and -6 processing are exactly the same as the other channels, except that the master volume and the loudness function have no effect on the signal.

Note that in 6-channel configuration, channels 5 and 6 are unaffected by back-end error ($\overline{\text{BKND_ERR}}$ goes low).

To use channels 5 and 6 as unprocessed lineouts, the following setup is recommended:

- Channel-5 volume and channel-6 volume should be set for a constant output, such as 0 dB.
- Bass and treble for channels 5 and 6 can be used if desired.
- DRC1 should be bypassed for channels 5 and 6.
- If a downmix is desired on channels 5 and 6 as lineout, the downmixing can be performed using the channel-5 and channel-6 input mixers.
- The operation of the channel-5 and -6 biquads is unaffected by the 6-/8-channel configuration setting.

### *7.4.21.4 Recovery from Clock Error*

The TAS5548 can be set either to perform a volume ramp up during the recovery sequence of a clock error or simply to come up in the last state (or desired state if a volume or tone update was in progress). This feature is enabled via $I^2C$ system control register 0x03.

### *7.4.21.5 Power-Supply Volume-Control Enable*

The power-supply volume control (PSVC) can be enabled and disabled via $I^2C$ register 0xE0. The subwoofer PWM output is always controlled by the PSVC. When using PSVC the subwoofer cannot be used as lineout.

### *7.4.21.6 Volume and Mute Update Rate*

The TAS5548 has fixed soft volume and mute ramp durations. The ramps are linear. The soft volume and mute ramp rates are adjustable by programming the $I^2C$ register 0xD0 for the appropriate number of steps to be 512, 1024, or 2048. The update is performed at a fixed rate regardless of the sample rate.

- In normal speed, the update rate is 1 step every $4/f_S$ seconds.
- In double speed, the update is 1 step every $8/f_S$ seconds.
- In quad speed, the update is 1 step every $16/f_S$ seconds.

Because of processor loading, the update rate can increase for some increments by one step every $1/f_S$ to $3/f_S$. However, the variance of the total time to go from 18 dB to mute is less than 25%.

**Table 14. Volume Ramp Periods in ms**

| NUMBER OF STEPS | SAMPLE RATE (kHz) | |
|---|---|---|
| | 44.1, 88.2, 176.4 | 32, 48, 96, 192 |
| 512 | 46.44 | 42.67 |
| 1024 | 92.88 | 85.33 |
| 2048 | 185.76 | 170.67 |

#### 7.4.21.7 Modulation Index Limit

PWM modulation is a linear function of the audio signal. When the audio signal is 0, the PWM modulation is 50%. When the audio signal increases toward full scale, the PWM modulation increases toward 100%. For negative signals, the PWM modulations fall below 50% toward 0%.

However, the maximum possible modulation does have a limit. During the off time period, the power stage connected to the TAS5548 output needs to get ready for the next on-time period. The maximum possible modulation is then set by the power stage requirements. The default modulation index limit setting is 93.7%; however, some power stages may require a lower modulation limit. See the applicable power stage data sheet for details on setting the modulation index limit. The default setting of 93.7% can be changed in the modulation index register (0x16).

### 7.4.22 Master Clock and Serial Data Rate Controls

On the TAS5548 the internal master clock is derived from the XTAL and the internal sampling rate will always be 96 kHz (double speed mode) or 192 kHz (quad speed mode).

The TAS5548 can detect MCLK and the data rate automatically.

The MCLK frequency can be 64 $f_S$, 128 $f_S$, 196 $f_S$, 256 $f_S$, 384 $f_S$, 512 $f_S$, or 768 $f_S$.

The TAS5548 accepts a 64 $f_S$ SCLK rate and a 1 $f_S$ LRCLK.

The clock and serial data interface have several control parameters:

- MCLK ratio (64 $f_S$, 128 $f_S$, 196 $f_S$, 256 $f_S$, 384 $f_S$, 512 $f_S$, or 768 $f_S$) – $I^2C$ parameter
- Data rate (32, 44.1, 48, 88.2, 96, 176.4, 192 kHz) – $I^2C$ parameter
- AM mode enable/disable – $I^2C$ parameter

#### 7.4.22.1 192kHz Native Processing Mode

The TAS5548 ASRC defaults to 96kHz at startup. This means all DAP processing and filter calculations should be based on 96kHz sample rate.

However, the TAS5548 is also capable of processing content at 192kHz (with a reduced channel count).

To enable 192kHz native mode

- Write to 0xC5 ASRC Mode Control
- Set D20 = 1 (Serial clock output sampling rate is the internal sampling rate)
- Set D1:0 = 01 (192kHz Sampling Rate)
- 0xC5 = 0011 0001

DAP processing and filter calculations should be based on 192kHz sample rate. This mode should be used with an incoming I2S rate of 192kHz

#### 7.4.22.2 PLL Operation

The TAS5548 uses two internal clocks generated by two internal phase-locked loops (PLLs), the digital PLL (DPLL) and the analog PLL (APLL). The APLL provides the reference clock for the PWM. The DPLL provides the reference clock for the digital audio processor and the control logic.

The XTAL input provides the input reference clock for the APLL. The external crystal provides a time base to support a number of operations, including the detection of the MCLK ratio, the data rate, and clock error conditions. The internal oscillator time base provides a constant rate for all controls and signal timing.

## 7.5 Programming

### 7.5.1 $I^2C$ Serial-Control Interface (Slave Addresses 0x36)

The TAS5548 has a bidirectional $I^2C$ interface that is compatible with the Inter-IC ($I^2C$) bus protocol and supports both 100-kbps and 400-kbps data transfer rates for single- and multiple-byte write and read operations. This is a slave-only device that does not support a multimaster bus environment or wait state insertion. The control interface is used to program the registers of the device and to read device status.


Copyright © 2012–2015, Texas Instruments Incorporated

## Programming (continued)

The TAS5548 supports the standard-mode I$^2$C bus operation (100 kHz maximum) and the fast I$^2$C bus operation (400 kHz maximum). The TAS5548 performs all I$^2$C operations without I$^2$C wait cycles.

The I$^2$C address is 0x36 if ASEL pin = '1, but if the value of the pin = '0', then respective values will be 0X34.

### *7.5.1.1 General I$^2$C Operation*

The I$^2$C bus employs two signals—SDA (data) and SCL (clock)—to communicate between integrated circuits in a system. Data is transferred on the bus serially, one bit at a time. The address and data can be transferred in byte (8-bit) format, with the most significant bit (MSB) transferred first. In addition, each byte transferred on the bus is acknowledged by the receiving device with an acknowledge bit. Each transfer operation begins with the master device driving a start condition on the bus and ends with the master device driving a stop condition on the bus. The bus uses transitions on SDA while the clock is high to indicate start and stop conditions. A high-to-low transition on SDA indicates a start and a low-to-high transition indicates a stop. Normal data bit transitions must occur within the low time of the clock period. These conditions are shown in Figure 40. The master generates the 7-bit slave address and the read/write (R/$\overline{W}$) bit to open communication with another device and then waits for an acknowledge condition. The TAS5548 holds SDA low during the acknowledge clock period to indicate an acknowledgement. When this occurs, the master transmits the next byte of the sequence. Each device is addressed by a unique 7-bit slave address plus R/$\overline{W}$ bit (1 byte). All compatible devices share the same signals via a bidirectional bus using a wired-AND connection. An external pullup resistor must be used for the SDA and SCL signals to set the high level for the bus.

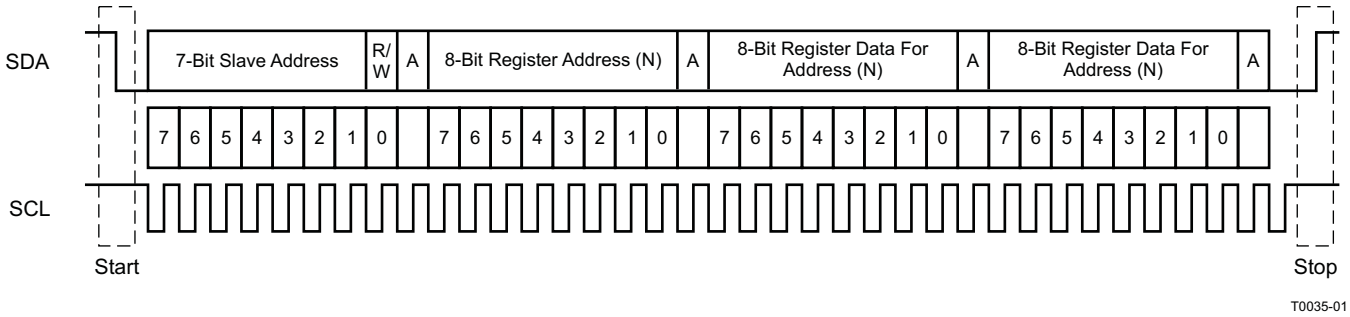


**Figure 40. Typical I$^2$C Sequence**

## Programming (continued)

The number of bytes that can be transmitted between start and stop conditions is unlimited. When the last word transfers, the master generates a stop condition to release the bus. A generic data transfer sequence is shown in Figure 40.

The 7-bit address for the TAS5548 is 0011011. When the R/$\overline{W}$ bit is added as the LSB, the $I^2C$ write address is 0x36 and the $I^2C$ read address is 0x37.

### *7.5.1.2 Single- and Multiple-Byte Transfers*

The serial-control interface supports both single-byte and multiple-byte read/write operations for status registers and the general control registers associated with the PWM. However, for the DAP data processing registers, the serial-control interface supports only multiple-byte (four-byte) read/write operations.

During multiple-byte read operations, the TAS5548 responds with data, a byte at a time, starting at the subaddress assigned, as long as the master device continues to respond with acknowledges. If a particular subaddress does not contain 32 bits, the unused bits are read as logic 0.

During multiple-byte write operations, the TAS5548 compares the number of bytes transmitted to the number of bytes that are required for each specific subaddress. If a write command is received for a biquad subaddress, the TAS5548 expects to receive five 32-bit words. If fewer than five 32-bit data words have been received when a stop command (or another start command) is received, the data received is discarded. Similarly, if a write command is received for a mixer coefficient, the TAS5548 expects to receive one 32-bit word.

Supplying a subaddress for each subaddress transaction is referred to as random $I^2C$ addressing. The TAS5548 also supports sequential $I^2C$ addressing. For write transactions, if a subaddress is issued followed by data for that subaddress and the 15 subaddresses that follow, a sequential $I^2C$ write transaction has taken place, and the data for all 16 subaddresses is successfully received by the TAS5548. For $I^2C$ sequential write transactions, the subaddress then serves as the start address and the amount of data subsequently transmitted, before a stop or start is transmitted, determines how many subaddresses are written. As is true for random addressing, sequential addressing requires that a complete set of data be transmitted. If only a partial set of data is written to the last subaddress, the data for the last subaddress is discarded. However, all other data written is accepted; only the incomplete data is discarded.

### *7.5.1.3 Single-Byte Write*

As shown in Figure 41, a single-byte, data-write transfer begins with the master device transmitting a start condition followed by the $I^2C$ device address and the read/write bit. The read/write bit determines the direction of the data transfer. For a write data transfer, the read/write bit is a 0. After receiving the correct $I^2C$ device address and the read/write bit, the TAS5548 device responds with an acknowledge bit. Next, the master transmits the address byte or bytes corresponding to the TAS5548 internal memory address being accessed. After receiving the address byte, the TAS5548 again responds with an acknowledge bit. Next, the master device transmits the data byte to be written to the memory address being accessed. After receiving the data byte, the TAS5548 again responds with an acknowledge bit. Finally, the master device transmits a stop condition to complete the single-byte, data-write transfer.

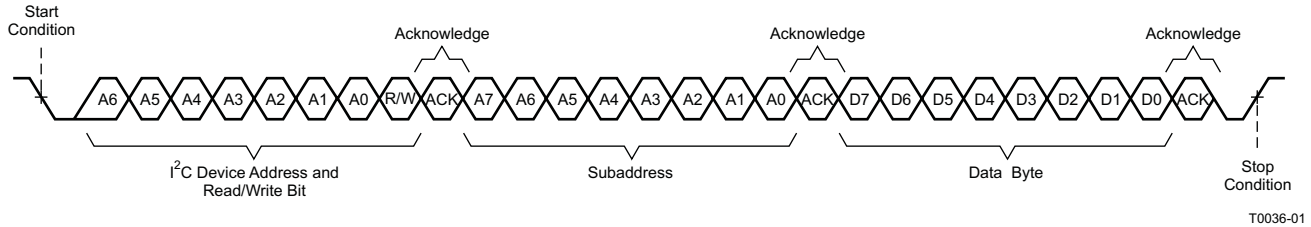


**Figure 41. Single-Byte Write Transfer**

### *7.5.1.4 Multiple-Byte Write*

A multiple-byte, data-write transfer is identical to a single-byte, data-write transfer except that multiple data bytes are transmitted by the master device to TAS5548, as shown in Figure 42. After receiving each data byte, the TAS5548 responds with an acknowledge bit.


Copyright © 2012–2015, Texas Instruments Incorporated

## Programming (continued)

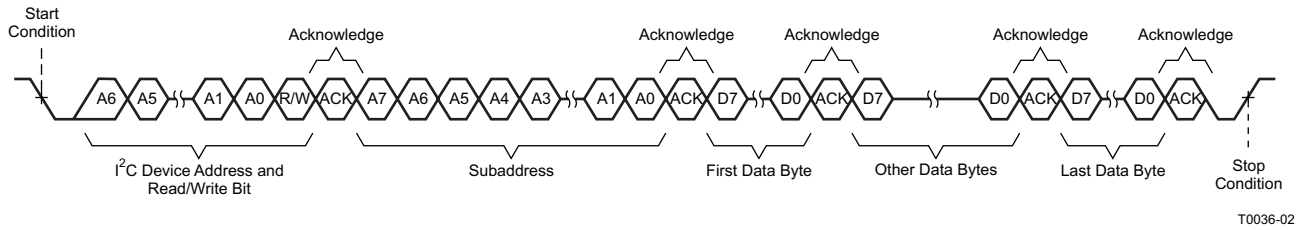


**Figure 42. Multiple-Byte Write Transfer**

### *7.5.1.5 Incremental Multiple-Byte Write*

The I$^2$C supports a special mode which permits I$^2$C write operations to be broken up into multiple data write operations that are multiples of four data bytes. These are 6-byte, 10-byte, 14-byte, 18-byte, etc., write operations that are composed of a device address, read/write bit, subaddress, and any multiple of four bytes of data. This permits the system to write large register values incrementally without blocking other I$^2$C transactions.

This feature is enabled by the append subaddress function in the TAS5548. This function enables the TAS5548 to append four bytes of data to a register that was opened by a previous I$^2$C register write operation but has not received its complete number of data bytes. Because the length of the long registers is a multiple of four bytes, using four-byte transfers has only an integral number of append operations.

When the correct number of bytes has been received, the TAS5548 begins processing the data.

The procedure to perform an incremental multibyte-write operation is as follows:

1. Start a normal I$^2$C write operation by sending the device address, write bit, register subaddress, and the first four bytes of the data to be written. At the end of that sequence, send a stop condition. At this point, the register has been opened and accepts the remaining data that is sent by writing four-byte blocks of data to the append subaddress (0xFE).
2. At a later time, one or more append data transfers are performed to incrementally transfer the remaining number of bytes in sequential order to complete the register write operation. Each of these append operations is composed of the device address, write bit, append subaddress (0xFE), and four bytes of data followed by a stop condition.
3. The operation is terminated due to an error condition, and the data is flushed:
   (a) If a new subaddress is written to the TAS5548 before the correct number of bytes are written.
   (b) If more or fewer than four bytes are data written at the beginning or during any of the append operations.
   (c) If a read bit is sent.

### *7.5.1.6 Single-Byte Read*

As shown in Figure 43, a single-byte, data-read transfer begins with the master device transmitting a start condition followed by the I$^2$C device address and the read/write bit. For the data-read transfer, both a write and then a read are actually performed. Initially, a write is performed to transfer the address byte or bytes of the internal memory address to be read. As a result, the read/write bit is a 0. After receiving the TAS5548 address and the read/write bit, the TAS5548 responds with an acknowledge bit. In addition, after sending the internal memory address byte or bytes, the master device transmits another start condition followed by the TAS5548 address and the read/write bit again. This time the read/write bit is a 1, indicating a read transfer. After receiving the TAS5548 address and the read/write bit, the TAS5548 again responds with an acknowledge bit. Next, the TAS5548 transmits the data byte from the memory address being read. After receiving the data byte, the master device transmits a not-acknowledge followed by a stop condition to complete the single-byte, data-read transfer.

## Programming (continued)

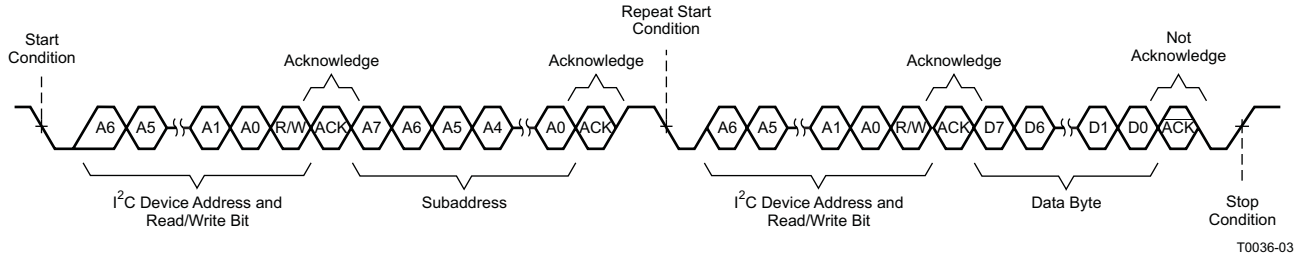


**Figure 43. Single-Byte Read Transfer**

### *7.5.1.7 Multiple-Byte Read*

A multiple-byte, data-read transfer is identical to a single-byte, data-read transfer except that multiple data bytes are transmitted by the TAS5548 to the master device, as shown in Figure 44. Except for the last data byte, the master device responds with an acknowledge bit after receiving each data byte.

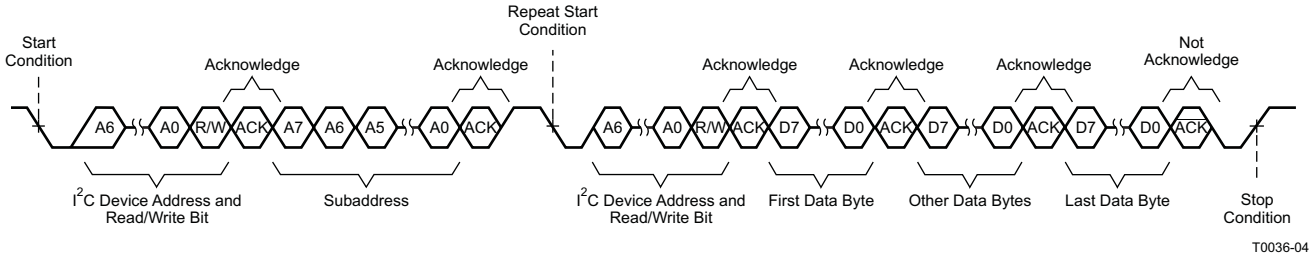


**Figure 44. Multiple-Byte Read Transfer**


Copyright © 2012–2015, Texas Instruments Incorporated

## 7.6 Register Maps

### 7.6.1 Serial-Control I²C Register Summary

The TAS5548 slave write address is 0x36 and the read address is 0x37. See *Serial-Control Interface Register Definitions* for complete bit definitions.

Note: Default stat is read immediately after device reset.

| I²C SUBADDRESS | TOTAL BYTES | REGISTER FIELDS | DESCRIPTION OF CONTENTS | DEFAULT STATE (hex) |
|---|---|---|---|---|
| 0x01 | 1 | General status register | ID code for the TAS5548 | 04 |
| 0x02 | 1 | Error status register | CLIP and frame slip errors | 00 |
| 0x03 | 1 | System control register 1 | PWM high pass, clock set, unmute select, PSVC select | B0 |
| 0x04 | 1 | System control register 2 | Automute, Shutdown, Line out, SDOUT | 03 |
| 0x05–0x0C | 1/reg. | Channel configuration control registers | Configure channels 1, 2, 3, 4, 5, 6, 7, and 8 | E0 |
| 0x0D | 1 | Headphone configuration control register | Configure headphone output | 00 |
| 0x0E | 1 | Serial data interface control register | Set serial data interface to right-justified, I²S, or left-justified. | 55 |
| 0x0F | 1 | Soft mute register | Soft mute for channels 1, 2, 3, 4, 5, 6, 7, and 8 | 00 |
| 0x10 | 1 | Energy Managers Register | See Table 23 | 0A |
| 0x11 | 1 | Reserved | Do not Read or Write | RESERVED |
| 0x12 | 1 | Oscillator Trim | See | 82 |
| 0x13 | 1 | Reserved | Do not Read or Write | RESERVED |
| 0x14 | 1 | Automute control register | Set automute delay and threshold | 44 |
| 0x15 | 1 | Automute PWM threshold and back-end reset period register | Set PWM automute threshold; set back-end reset period | 02 |
| 0x16 | 1 | Modulation Limit Reg (ch1 and 2) | Set modulation index ch1 and ch2 | 77 |
| 0x17 | 1 | Modulation Limit Reg (ch3 and 4) | Set Modulation Index ch3 and ch4 | 77 |
| 0x18 | 1 | Modulation Limit Reg (ch5 and 6) | Set Modulation Index ch5 and ch6 | 77 |
| 0x19 | 1 | Modulation Limit Reg (ch7 and 8) | Set Modulation Index ch7 and ch8 | 77 |
| 0x1A | 1 | Reserved | Do not Read or Write | RESERVED |
| 0x1B | 1 | IC Delay Channel 0 | See Table 28 | 80 |
| 0x1C | 1 | IC Delay Channel 1 | See Table 28 | 00 |
| 0x1D | 1 | IC Delay Channel 2 | See Table 28 | C0 |
| 0x1E | 1 | IC Delay Channel 3 | See Table 28 | 40 |
| 0x1F | 1 | IC Delay Channel 4 | See Table 28 | A0 |
| 0x20 | 1 | IC Delay Channel 5 | See Table 28 | 20 |
| 0x21 | 1 | IC Delay Channel 6 | See Table 28 | E0 |
| 0x22 | 1 | IC Delay Channel 7 | See Table 28 | 60 |
| 0x23 | 1 | IC Offset Delay Reg | See Table 28 | 00 |
| 0x24 | 1 | PWM sequence timing | See | 0F |
| 0x25 | 1 | PWM and Energy Manager Control Register | See Table 30 | 80 |
| 0x26 | 1 | Reserved | Do not Read or Write | RESERVED |
| 0x27 | 1 | Individual Channel Shutdown | See Table 31 | 00 |
| 0x28–0x2F | 1 | Reserved | Do not Read or Write | RESERVED |
| 0x30 | 1 | Input_Mux_ch1 and 2 | See Table 32 and Table 33 | 01 |
| 0x31 | 1 | Input_Mux_ch3 and 4 | See Table 32 and Table 33 | 23 |

Copyright © 2012–2015, Texas Instruments Incorporated

## Register Maps (continued)

| I²C SUBADDRESS | TOTAL BYTES | REGISTER FIELDS | DESCRIPTION OF CONTENTS | DEFAULT STATE (hex) |
|---|---|---|---|---|
| 0x32 | 1 | Input_Mux_ch5 and 6 | See Table 32 and Table 33 | 45 |
| 0x33 | 1 | Input_Mux_ch7 and 8 | See Table 32 and Table 33 | 67 |
| 0x34 | 1 | PWM_mux_ch1 and 2 | See Table 34 and Table 35 | 01 |
| 0x35 | 1 | PWM_mux_ch3 and 4 | See Table 34 and Table 35 | 23 |
| 0x36 | 1 | PWM_mux_ch5 and 6 | See Table 34 and Table 35 | 45 |
| 0x37 | 1 | PWM_mux_ch7 and 8 | See Table 34 and Table 35 | 67 |
| 0x38 | 1 | IC Delay Channel 0(BD Mode) | See BD Mode and Ternary - 8 Interchannel Channel Delay (0x38 to 0x3F) | 80 |
| 0x39 | 1 | IC Delay Channel 1(BD Mode) | See BD Mode and Ternary - 8 Interchannel Channel Delay (0x38 to 0x3F) | 00 |
| 0x3A | 1 | IC Delay Channel 2(BD Mode) | See BD Mode and Ternary - 8 Interchannel Channel Delay (0x38 to 0x3F) | C0 |
| 0x3B | 1 | IC Delay Channel 3(BD Mode) | See BD Mode and Ternary - 8 Interchannel Channel Delay (0x38 to 0x3F) | 40 |
| 0x3C | 1 | IC Delay Channel 4(BD Mode) | See BD Mode and Ternary - 8 Interchannel Channel Delay (0x38 to 0x3F) | A0 |
| 0x3D | 1 | IC Delay Channel 5(BD Mode) | See BD Mode and Ternary - 8 Interchannel Channel Delay (0x38 to 0x3F) | 20 |
| 0x3E | 1 | IC Delay Channel 6(BD Mode) | See BD Mode and Ternary - 8 Interchannel Channel Delay (0x38 to 0x3F) | E0 |
| 0x3F | 1 | IC Delay Channel 7(BD Mode) | See BD Mode and Ternary - 8 Interchannel Channel Delay (0x38 to 0x3F) | 60 |
| 0x40 | 4 | Reserved | Do not Read or Write | RESERVED |
| 0x41–0x48 | 32/reg. | Input mixer registers, Ch1–Ch8 | 8×8 input crossbar mixer setup | 41 – 80 2nd Byte – Other 00<br>42 – 80 6th Byte – Other 00<br>43 – 80 10th Byte – Other 00<br>44 – 80 14th Byte – Other 00<br>45 – 80 18th Byte – Other 00<br>46 – 80 22nd Byte – Other 00<br>47 – 80 26th Byte – Other 00<br>48 – 80 30th Byte – Other 00 |
| 0x49 | 4 | Bass Mixer | Input mixer 1 to Ch8 mixer coefficient | 0000 0000 |
| 0x4A | 4 | Bass Mixer | Input mixer 2 to Ch8 mixer coefficient | 0000 0000 |
| 0x4B | 4 | Bass Mixer | Input mixer 7 to Ch2 mixer coefficient | 0000 0000 |
| 0x4C | 4 | Bass Mixer | Bypass Ch7 biquad 2 coefficient | 0000 0000 |
| 0x4D | 4 | Bass Mixer | Ch7 biquad 2 coefficient | 0080 0000 |
| 0x4E | 4 | Bass Mixer | Ch8 biquad 2 output to Ch1 mixer and Ch2 mixer coefficient | 0000 0000 |
| 0x4F | 4 | Bass Mixer | Bypass Ch8 biquad 2 coefficient | 0000 0000 |
| 0x50 | 4 | Bass Mixer | Ch8 biquad 2 coefficient | 0080 0000 |
| 0x51–0x88 | 20/reg. | Biquad filter register | Ch1–Ch8 biquad filter coefficients | All biquads = 80 2nd byte – other 00 |
| 0x89–0x90 | 8 | Bass and treble register, Ch1–Ch8 | Bass and treble for Ch1–Ch8 | Bass and treble = 80 2nd byte – other 00 |
| 0x91 | 4 | Loudness Log2 LG | Loudness Log2 gain (LG) | 0FC0 0000 |
| 0x92 | 8 | Loudness Log2 LO | Loudness Log2 offset (LO) | 0000 0000 |
| 0x93 | 4 | Loudness G | Loudness Gain | 0000 0000 |
| 0x94 | 4 | Loudness O | Loudness Offset | 0000 0000 |


Copyright © 2012–2015, Texas Instruments Incorporated

## Register Maps (continued)

| I²C SUBADDRESS | TOTAL BYTES | REGISTER FIELDS | DESCRIPTION OF CONTENTS | DEFAULT STATE (hex) |
|---|---|---|---|---|
| 0x95 | 20 | Loudness biquad | Loudness biquad coefficient b0 | 00FE 5045 |
| | | | Loudness biquad coefficient b1 | 0F81 AA27 |
| | | | Loudness biquad coefficient b2 | 0000 D513 |
| | | | Loudness biquad coefficient a0 | 0000 0000 |
| | | | Loudness biquad coefficient a1 | 0FFF 2AED |
| 0x96 | 4 | DRC1 control Ch1–Ch7 | DRC1 control Ch1–Ch7 | 00 00 00 00 |
| 0x97 | 4 | DRC2 control register, Ch8 | DRC2 control Ch8 | 00 00 00 00 |
| 0x98 | 8 | Ch1–Ch7, DRC1 energy | DRC1 energy | 0000 883F 007F 77C0 |
| | | Ch1–Ch7, DRC1 (1 – energy) | DRC1 (1 – energy) | |
| 0x99 | 8 | Ch1–Ch7 DRC1 threshold T1 | DRC1 threshold (T1) – 4 bytes | 0B20 E2B2 06F9 DE58 |
| | | Ch1–Ch7 DRC1 threshold T2 | DRC1 threshold (T2) – 4 bytes | |
| 0x9A | 12 | Ch1–Ch7 , DRC1 slope k0 | DRC1 slope (k0) | 0040 0000 0FC0 0000 0F90 0000 |
| | | Ch1–Ch7, DRC1 slope k1 | DRC1 slope (k1) | |
| | | Ch1–Ch7 DRC1 slope k2 | DRC1 slope (k2) | |
| 0x9B | 8 | Ch1–Ch7 DRC1 offset 1 | DRC1 offset 1 (O1) – 4 bytes | FF82 3098 0195 B2C0 |
| | | Ch1–Ch7 DRC1 offset 2 | DRC1 offset 2 (O2) – 4 bytes | |
| 0x9C | 16 | Ch1–Ch7 DRC1 attack | DRC1 attack | 0000 883F 007F 77C0 0000 0056 003F FFA8 |
| | | Ch1–Ch7 DRC1 (1 – attack) | DRC1 (1 – attack) | |
| | | Ch1–Ch7 DRC1 decay | DRC1 decay | |
| | | Ch1–Ch7 DRC1 (1 – decay) | DRC1 (1 – decay) | |
| 0x9D | 8 | Ch8 DRC2 energy | DRC2 energy | 0000 883F 007F 77C0 |
| | | Ch8 DRC2 (1 – energy) | DRC2 (1 – energy) | |
| 0x9E | 8 | Ch8 DRC2 threshold T1 | DRC2 threshold (T1) – 4 bytes | 0B20 E2B2 06F9 DE58 |
| | | Ch8 DRC2 threshold T2 | DRC2 threshold (T2) – 4 bytes | |
| 0x9F | 12 | Ch8 DRC2 slope k0 | DRC2 slope (k0) | 0040 0000 0FC0 0000 0F90 0000 |
| | | Ch8 DRC2 slope k1 | DRC2 slope (k1) | |
| | | Ch8 DRC2 slope k2 | DRC2 slope (k2) | |
| 0xA0 | 8 | Ch8 DRC2 offset 1 | DRC2 offset (O1) – lower 4 bytes | FF82 3098 0195 B2C0 |
| | | Ch8 DRC2 offset 2 | DRC2 offset (O2) – lower 4 bytes | |
| 0xA1 | 16 | Ch8 DRC2 attack | DRC 2 attack | 0000 883F 007F 77C0 0000 0056 003F FFA8 |
| | | Ch8 DRC2 (1 – attack) | DRC2 (1 – attack) | |
| | | Ch8 DRC2 decay | DRC2 decay | |
| | | Ch8 DRC2 (1 – decay) | DRC2 (1 – decay) | |
| 0xA2 | 8 | DRC bypass 1 | Ch1 DRC1 bypass coefficient | 0080 0000 0000 0000 |
| | | DRC inline 1 | Ch1 DRC1 inline coefficient | |
| 0xA3 | 8 | DRC bypass 2 | Ch2 DRC1 bypass coefficient | 0080 0000 0000 0000 |
| | | DRC inline 2 | Ch2 DRC1 inline coefficient | |
| 0xA4 | 8 | DRC bypass 3 | Ch3 DRC1 bypass coefficient | 0080 0000 0000 0000 |
| | | DRC inline 3 | Ch3 DRC1 inline coefficient | |
| 0xA5 | 8 | DRC bypass 4 | Ch4 DRC1 bypass coefficient | 0080 0000 0000 0000 |
| | | DRC inline 4 | Ch4 DRC1 inline coefficient | |
| 0xA6 | 8 | DRC bypass 5 | Ch5 DRC1 bypass coefficient | 0080 0000 0000 0000 |
| | | DRC inline 5 | Ch5 DRC1 inline coefficient | |
| 0xA7 | 8 | DRC bypass 6 | Ch6 DRC1 bypass coefficient | 0080 0000 0000 0000 |
| | | DRC inline 6 | Ch6 DRC1 inline coefficient | |
| 0xA8 | 8 | DRC bypass 7 | Ch7 DRC1 bypass coefficient | 0080 0000 0000 0000 |
| | | DRC inline 7 | Ch7 DRC1 inline coefficient | |

Copyright © 2012–2015, Texas Instruments Incorporated

## Register Maps (continued)

| I²C SUBADDRESS | TOTAL BYTES | REGISTER FIELDS | DESCRIPTION OF CONTENTS | DEFAULT STATE (hex) |
|---|---|---|---|---|
| 0xA9 | 8 | DRC2 bypass 8 | Ch8 DRC2 bypass coefficient | 0080 0000 0000 0000 |
| | | DRC2 inline 8 | Ch8 DRC2 inline coefficient | |
| 0xAA | 8 | Output Select and Mix to (8x2) PWM1 | See Table 48 | 80 2nd Byte – Other 00 |
| 0xAB | 8 | Output Select and Mix to (8x2) PWM2 | See Table 48 | 10 80 1st Two Bytes – Other 00 |
| 0xAC | 8 | Output Select and Mix to (8x2) PWM3 | See Table 48 | 20 80 1st Two Bytes – Other 00 |
| 0xAD | 8 | Output Select and Mix to (8x2) PWM4 | See Table 48 | 30 80 1st Two Bytes – Other 00 |
| 0xAE | 8 | Output Select and Mix to (8x2) PWM5 | See Table 48 | 40 80 1st Two Bytes – Other 00 |
| 0xAF | 8 | Output Select and Mix to (8x2) PWM6 | See Table 48 | 50 80 1st Two Bytes – Other 00 |
| 0xB0 | 12 | Output Select and Mix to (8x3) PWM7 | See 8×3 Output Mixer Registers (0xB0–0xB1) | 60 80 1st Two Bytes – Other 00 |
| 0xB1 | 12 | Output Select and Mix to (8x3) PWM8 | See 8×3 Output Mixer Registers (0xB0–0xB1) | 70 80 1st Two Bytes – Other 00 |
| 0xB2 | 16 | Energy Manager Averaging coefficients(Two 28 bit coefficients for satellite and sub-woofer) | sat_channels_alpha[31:0], sat_channels_1-alpha[31:0] sub_channel_alpha[31:0], sub_channels_1-alpha[31:0] | 0000 0000 0000 0000 0000 0000 0000 0000 |
| 0xB3 | 4 | Energy Manager Weighting co-efficients(28-bit coefficient for channel1) | 5.23 format | 0000 0000 |
| 0xB4 | 4 | Energy Manager Weighting co-efficients(28-bit coefficient for channel2) | 5.23 format | 0000 0000 |
| 0xB5 | 4 | Energy Manager Weighting co-efficients(28-bit coefficient for channel3) | 5.23 format | 0000 0000 |
| 0xB6 | 4 | Energy Manager Weighting co-efficients(28-bit coefficient for channel4) | 5.23 format | 0000 0000 |
| 0xB7 | 4 | Energy Manager Weighting co-efficients(28-bit coefficient for channel5) | 5.23 format | 0000 0000 |
| 0xB8 | 4 | Energy Manager Weighting co-efficients(28-bit coefficient for channel6) | 5.23 format | 0000 0000 |
| 0xB9 | 4 | Energy Manager Weighting co-efficients(28-bit coefficient for channel7) | 5.23 format | 0000 0000 |
| 0xBA | 4 | Energy Manager 2 Weighting co-efficient(28-bit coefficient for channel8 - Sub) | 5.23 format | 0000 0000 |
| 0xBB | 4 | Energy Manager high threshold for satellite | 5.23 format | 0000 0000 |
| 0xBC | 4 | Energy Manager low threshold for satellite | 5.23 format | 0000 0000 |
| 0xBD | 4 | Energy Manager high threshold for sub-woofer | 5.23 format | 0000 0000 |
| 0xBE | 4 | Energy Manager low threshold for sub-woofer | 5.23 format | 0000 0000 |
| 0xBF–0xC2 | 4 | Reserved | Do not Read or Write | RESERVED |
| 0xC3 | 4 | ASRC Status | Read Only Status of both SRC banks (Lock, Mute, Error etc) | 1105 0001 |
| 0xC4 | 4 | ASRC Control | Mode Control, ASRC Control Link, Mute, Bypass, Dither etc | 0001 0055 |
| 0xC5 | 4 | ASRC Mode Control | ASRC Pin, Rate | 0000 0000 |
| 0xC6 | 4 | Reserved | Do not Read or Write | 0000 0000 |


Copyright © 2012–2015, Texas Instruments Incorporated

## Register Maps (continued)

| I²C SUBADDRESS | TOTAL BYTES | REGISTER FIELDS | DESCRIPTION OF CONTENTS | DEFAULT STATE (hex) |
|---|---|---|---|---|
| 0xC7 | 8 | Reserved | Do not Read or Write | 0000 0000 0000 0000 |
| 0xC8 | 4 | Reserved | Do not Read or Write | 0000 0000 |
| 0xC9 | 4 | Reserved | Do not Read or Write | 0000 0000 |
| 0xCA | 8 | Reserved | Do not Read or Write | 0000 0000 0000 0000 |
| 0xCB | 4 | Reserved | Do not Read or Write | 0000 0000 |
| 0xCC | 4 | Auto Mute Behaviour | See Auto Mute Behavior (0xCC) | TBD |
| 0xCD | 4 | Reserved | Do not Read or Write | RESERVED |
| 0xCF | 20 | PSVC Volume biquad | PSVC Volume biquad | 80 2nd Byte – Other 00 |
| 0xD0 | 4 | Volume, treble, and bass slew rates register | Gain Adjust Rate | 0000 013F |
| 0xD1 | 4 | Ch1 volume | Ch1 volume | 0000 0048 |
| 0xD2 | 4 | Ch2 volume | Ch2 volume | 0000 0048 |
| 0xD3 | 4 | Ch3 volume | Ch3 volume | 0000 0048 |
| 0xD4 | 4 | Ch4 volume | Ch4 volume | 0000 0048 |
| 0xD5 | 4 | Ch5 volume | Ch5 volume | 0000 0048 |
| 0xD6 | 4 | Ch6 volume | Ch6 volume | 0000 0048 |
| 0xD7 | 4 | Ch7 volume | Ch7 volume | 0000 0048 |
| 0xD8 | 4 | Ch8 volume | Ch8 volume | 0000 0048 |
| 0xD9 | 4 | Master volume | Master volume | 0000 0245 |
| 0xDA | 4 | Bass filter set register | Bass filter set (all channels) | 0303 0303 |
| 0xDB | 4 | Bass filter index register | Bass filter level (all channels) | 1212 1212 |
| 0xDC | 4 | Treble filter set register | Treble filter set (all channels) | 0303 0303 |
| 0xDD | 4 | Treble filter index register | Treble filter level (all channels) | 1212 1212 |
| 0xDE | 4 | AM mode register | Set up AM mode for AM-interference reduction | 0000 0000 |
| 0xDF | 4 | PSVC range register | Set PSVC control range | 0000 0002 |
| 0xE0 | 4 | General control register | 6- or 8-channel configuration, PSVC enable | 0000 0000 |
| 0xE1 | 4 | Reserved | Do not Read or Write | N/A |
| 0xE2 | 12 | Reserved | Do not Read or Write | N/A |
| 0xE3 | 4 | r_dolby_COEFLR | 96K Dolby Downmix 5.23. See | 0029 0333 |
| 0xE4 | 4 | r_dolby_COEFC | 96K Dolby Downmix 5.23. See | 001C FEEF |
| 0xE5 | 4 | r_dolby_COEFLSP | 96K Dolby Downmix 5.23. See | 001C FEEF |
| 0xE6 | 4 | r_dolby_COEFRSP | 96K Dolby Downmix 5.23. See | 001C FEEF |
| 0xE7 | 4 | r_dolby_COEFLSM | 96K Dolby Downmix 5.23. See | 0FE3 0111 |
| 0xE8 | 4 | r_dolby_COEFRSM | 96K Dolby Downmix 5.23. See | 0FE3 0111 |
| 0xE9 | 4 | THD_Manager_Pre | Boost (5.23) | 0080 0000 |
| 0xEA | 4 | THD_Manager_Post | Cut (5.23) | 0080 0000 |
| 0xEB | | Reserved | | N/A |
| 0xEC | 8 | SDIN5 input mix L[1] | See Table 80 | 0000 0000 0000 0000 |
| | | SDIN5 input mix R[1] | See | 0000 0000 0000 0000 |
| 0xED | 8 | SDIN5 input mix L[2] | See Table 80 | 0000 0000 0000 0000 |
| | | SDIN5 input mix R[2] | See Table 80 | 0000 0000 0000 0000 |
| 0xEE | 8 | SDIN5 input mix L[3] | See Table 80 | 0000 0000 0000 0000 |
| | | SDIN5 input mix R[3] | See Table 80 | 0000 0000 0000 0000 |
| 0xEF | 8 | SDIN5 input mix L[4] | See Table 80 | 0000 0000 0000 0000 |
| | | SDIN5 input mix R[4] | See Table 80 | 0000 0000 0000 0000 |
| 0xF0 | 8 | SDIN5 input mix L[5] | See Table 80 | 0000 0000 0000 0000 |
| | | SDIN5 input mix R[5] | See Table 80 | 0000 0000 0000 0000 |
| 0xF1 | 8 | SDIN5 input mix L[6] | See Table 80 | 0000 0000 0000 0000 |
| | | SDIN5 input mix R[6] | See Table 80 | 0000 0000 0000 0000 |

Copyright © 2012–2015, Texas Instruments Incorporated

## Register Maps (continued)

| I²C SUBADDRESS | TOTAL BYTES | REGISTER FIELDS | DESCRIPTION OF CONTENTS | DEFAULT STATE (hex) |
|---|---|---|---|---|
| 0xF2 | 8 | SDIN5 input mix L[7] | See Table 80 | 0000 0000 0000 0000 |
| | | SDIN5 input mix R[7] | See Table 80 | 0000 0000 0000 0000 |
| 0xF3 | 8 | SDIN5 input mix L[8] | See Table 80 | 0000 0000 0000 0000 |
| | | SDIN5 input mix R[8] | See Table 80 | 0000 0000 0000 0000 |
| 0xF4 | 16 | 192kHz Process Flow Output Mixer | P1_to_opmix[1] (5.23). See Table 81 | 0080 0000 0000 0000 |
| | | 192kHz Process Flow Output Mixer | P2_to_opmix[1] (5.23). See Table 81 | 0000 0000 0000 0000 |
| | | 192kHz Process Flow Output Mixer | P3_to_opmix[1] (5.23). See Table 81 | 0000 0000 0000 0000 |
| | | 192kHz Process Flow Output Mixer | P4_to_opmix[1] (5.23). See Table 81 | 0000 0000 0000 0000 |
| 0xF5 | 16 | 192kHz Process Flow Output Mixer | P1_to_opmix[2] (5.23). See Table 81 | 0000 0000 0000 0000 |
| | | 192kHz Process Flow Output Mixer | P2_to_opmix[2] (5.23). See Table 81 | 0080 0000 0000 0000 |
| | | 192kHz Process Flow Output Mixer | P3_to_opmix[2] (5.23). See Table 81 | 0000 0000 0000 0000 |
| | | 192kHz Process Flow Output Mixer | P4_to_opmix[2] (5.23). See Table 81 | 0000 0000 0000 0000 |
| 0xF6 | 16 | 192kHz Process Flow Output Mixer | P1_to_opmix[3] (5.23). See Table 81 | 0000 0000 0000 0000 |
| | | 192kHz Process Flow Output Mixer | P2_to_opmix[3] (5.23). See Table 81 | 0000 0000 0000 0000 |
| | | 192kHz Process Flow Output Mixer | P3_to_opmix[3] (5.23). See Table 81 | 0080 0000 0000 0000 |
| | | 192kHz Process Flow Output Mixer | P4_to_opmix[3] (5.23). See Table 81 | 0000 0000 0000 0000 |
| 0xF7 | 16 | 192kHz Process Flow Output Mixer | P1_to_opmix[4] (5.23). See Table 81 | 0000 0000 0000 0000 |
| | | 192kHz Process Flow Output Mixer | P2_to_opmix[4] (5.23). See Table 81 | 0000 0000 0000 0000 |
| | | 192kHz Process Flow Output Mixer | P3_to_opmix[4] (5.23). See Table 81 | 0000 0000 0000 0000 |
| | | 192kHz Process Flow Output Mixer | P4_to_opmix[4] (5.23). See Table 81 | 0080 0000 0000 0000 |
| 0xF8-0xF9 | 4 | Reserved | Do not Read or Write | RESERVED |
| 0xFA | 4 | 192kHz Image Select | IMGSEL | 0000 0000 |
| 0xFB | 16 | 192kHz Dolby Downmix Coefficients | dolby_COEF1L (5.23) See Table 82 | 0029 0333 |
| | | | dolby_COEF2L (5.23) See Table 82 | 001C FEEF |
| | | | dolby_COEF3L (5.23) See Table 82 | FFE3 0111 |
| | | | dolby_COEF4L (5.23) See Table 82 | FFE3 0111 |
| 0xFC | 16 | | dolby_COEF1R (5.23) See Table 82 | 0029 0333 |
| | | | dolby_COEF2R (5.23) See Table 82 | 001C FEEF |
| | | | dolby_COEF3R (5.23) See Table 82 | 001C FEEF |
| | | | dolby_COEF4R (5.23) See | 001C FEEF |
| 0XFD | 4 | Reserved | Do not Read or Write | RESERVED |
| 0xFE | 4 (min) | Multiple-byte write-append register | Special register | |
| 0xFF | 4 | Reserved | Do not Read or Write | RESERVED |


Copyright © 2012–2015, Texas Instruments Incorporated

### 7.6.2 Serial-Control Interface Register Definitions

Unless otherwise noted, the I$^2$C register default values are in **bold** font.

Note that u indicates unused/reserved bits.

#### *7.6.2.1 General Status Register 0 (0x01)*

**Table 15. General Status Register Format**

| D7 | D6 | D5 | D4 | D3 | D2 | D1 | D0 | FUNCTION |
|---|---|---|---|---|---|---|---|---|
| **0** | **0** | **0** | **0** | **0** | **1** | **0** | **0** | **Identification code for TAS5548** |

#### *7.6.2.2 Error Status Register (0x02)*

Note that the error bits are sticky bits that are not cleared by the hardware. This means that the software must clear the register (write zeroes) and then read them to determine if there are any persistent errors. Bits D7-D4 are reserved.

**Table 16. Error Status Register (0x02)**

| D7 | D6 | D5 | D4 | D3 | D2 | D1 | D0 | FUNCTION |
|---|---|---|---|---|---|---|---|---|
| – | – | – | – | 1 | – | – | – | Frame Slip |
| – | – | – | – | – | 1 | – | – | Clip Indicator |
| – | – | – | – | – | – | 1 | – | Faultz |
| **0** | **0** | **0** | **0** | **0** | **0** | **0** | **0** | **No Errors** |

#### *7.6.2.3 System Control Register 1 (0x03)*

Bits D1 and D0 are Reserved.

**Table 17. System Control Register-1 Format**

| D7 | D6 | D5 | D4 | D3 | D2 | D1 | D0 | Function |
|---|---|---|---|---|---|---|---|---|
| 0 | – | – | – | – | – | – | – | PWM high pass disabled |
| **1** | – | – | – | – | – | – | – | **PWM high pass enabled** |
| | | | | | | | | |
| – | 1 | – | – | – | – | – | – | PSVC HIZ Enable |
| – | **0** | – | – | – | – | – | – | **PSVC HIZ Disable** |
| | | | | | | | | |
| – | – | 0 | – | – | – | – | – | Soft Unmute on Recovery from Clock Error |
| – | – | **1** | – | – | – | – | – | **Hard Unmute on Recovery from Clock Error** |
| | | | | | | | | |
| – | – | – | 0 | – | – | – | – | All Channel enable |
| – | – | – | **1** | – | – | – | – | **All Channel Shutdown** |
| | | | | | | | | |
| – | – | – | – | **0** | – | – | – | **Enable Clock Auto Detect (Always set to 0 for correct operation)** |
| – | – | – | – | 1 | – | – | – | Disable Clock Auto Detect |
| | | | | | | | | |
| – | – | – | – | – | **0** | – | – | **PWM MidZ Enable (No By-pass)** |
| – | – | – | – | – | 1 | – | – | PWM MidZ Bypass |
| | | | | | | | | |
| – | – | – | – | – | – | **0** | **0** | **Reserved: Do not change B0 and B1 from 00.** |
| – | – | – | – | – | – | 0 | 1 | Reserved: |
| – | – | – | – | – | – | 1 | 0 | Reserved: |
| – | – | – | – | – | – | 1 | 1 | Reserved: |

#### 7.6.2.4 System Control Register 2 (0x04)

Bit D3 is reserved.

**Table 18. System Control Register-2 Format**

| D7 | D6 | D5 | D4 | D3 | D2 | D1 | D0 | Function |
|---|---|---|---|---|---|---|---|---|
| **0** | **–** | **–** | **–** | – | – | **–** | **–** | **Unmute Threshold 6 dB over Input Threshold** |
| 1 | **–** | **–** | **–** | – | – | **–** | **–** | Unmute Threshold equal to Input Threshold |
| – | **0** | – | – | – | – | – | – | **All channel auto-mute timeout disable** |
| – | 1 | **–** | **–** | – | – | **–** | **–** | All channel auto-mute timeout enable |
| – | – | **0** | – | – | – | – | – | **Disable channel group** |
| **–** | **–** | 1 | **–** | – | – | **–** | **–** | Enable channel group |
| – | – | – | **0** | – | – | – | – | **Enable DAP automute** |
| **–** | **–** | **–** | 1 | – | – | **–** | **–** | Disable DAP automute |
| – | – | – | – | **0** | **0** | – | – | **Normal Mode** |
| – | – | – | – | – | 1 | – | – | Line out Mode |
| – | – | – | – | – | – | **1** | – | **ASEL_EMO2 pin is input** |
| – | – | – | – | – | – | 0 | – | ASEL_EMO2 pin is out output |
| – | – | – | – | – | – | – | 0 | No Output Downmix on SDOUT(TX SAP Disable) |
| – | – | – | – | – | – | – | **1** | **Output Downmix on SDOUT. Dolby-out is enabled when this bit is set and system is in normal mode** |

#### 7.6.2.5 Channel Configuration Control Registers (0x05–0x0C)

Channels 1, 2, 3, 4, 5, 6, 7, and 8 are mapped into 0x05, 0x06, 0x07, 0x08, 0x09, 0x0A, 0x0B, and 0x0C, respectively.

**Table 19. Channel Configuration Control Register Format**

| D7 | D6 | D5 | D4 | D3 | D2 | D1 | D0 | FUNCTION |
|---|---|---|---|---|---|---|---|---|
| 0 | – | – | – | – | – | – | – | Disable back-end reset sequence if all channels set to disable. |
| **1** | – | – | – | – | – | – | – | **Enable back-end reset sequence.** |
| – | 0 | – | – | – | – | – | – | RESERVED |
| – | **1** | – | – | – | – | – | – | **RESERVED** |
| – | – | 0 | – | – | – | – | – | RESERVED |
| – | – | **1** | – | – | – | – | – | **RESERVED** |
| – | – | – | **0** | – | – | – | – | **Normal Back-End Polarity** |
| – | – | – | 1 | – | – | – | – | Switches PWM+ and PWM– and inverts audio signal |
| – | – | – | – | **0** | – | – | – | **RESERVED** |
| – | – | – | – | 1 | – | – | – | RESERVED |
| – | – | – | – | – | **0** | – | – | **RESERVED** |
| – | – | – | – | – | 1 | – | – | RESERVED |
| – | – | – | – | – | – | **0** | – | **RESERVED** |
| – | – | – | – | – | – | 1 | – | RESERVED |


Copyright © 2012–2015, Texas Instruments Incorporated

#### 7.6.2.6 Headphone Configuration Control Register (0x0D)

Bit D0 is *don't care*.

**Table 20. Headphone Configuration Control Register Format**

| D7 | D6 | D5 | D4 | D3 | D2 | D1 | D0 | FUNCTION |
|---|---|---|---|---|---|---|---|---|
| **0** | – | – | – | – | – | – | – | **Disable back-end reset sequence for Headphone** |
| 1 | – | – | – | – | – | – | – | Enable back-end reset sequence for Headphone |
| – | **0** | – | – | – | – | – | – | **Valid is high when headphone PWM outputs are switching** |
| – | 1 | – | – | – | – | – | – | Valid low in Headphone mode. |
| – | – | **0** | – | – | – | – | – | **Reserved** |
| – | – | 1 | – | – | – | – | – | Reserved |
| – | – | – | **0** | – | – | – | – | **Reserved** |
| – | – | – | 1 | – | – | – | – | Reserved |
| – | – | – | – | **0** | – | – | – | **Reserved** |
| – | – | – | – | 1 | – | – | – | Reserved |
| – | – | – | – | – | **0** | – | – | **Reserved** |
| – | – | – | – | – | 1 | – | – | Reserved |
| – | – | – | – | – | – | **0** | – | **Reserved** |
| – | – | – | – | – | – | 1 | – | Reserved |

#### 7.6.2.7 Serial Data Interface Control Register (0x0E)

Nine serial modes can be programmed via the $I^2C$ interface.

**Table 21. Serial Data Interface Control Register Format for SDOUT *and SDIN5***

| SERIAL DATA INTERFACE FORMAT | WORD LENGTHS | D3 | D2 | D1 | D0 |
|---|---|---|---|---|---|
| Right-justified | 16 | 0 | 0 | 0 | 0 |
| Right-justified | 20 | 0 | 0 | 0 | 1 |
| Right-justified | 24 | 0 | 0 | 1 | 0 |
| $I^2S$ | 16 | 0 | 0 | 1 | 1 |
| $I^2S$ | 20 | 0 | 1 | 0 | 0 |
| **$I^2S$** | **24** | **0** | **1** | **0** | **1** |
| Left-justified | 16 | 0 | 1 | 1 | 0 |
| Left-justified | 20 | 0 | 1 | 1 | 1 |
| Left-justified | 24 | 1 | 0 | 0 | 0 |
| Illegal | | 1 | 0 | 0 | 1 |
| Illegal | | 1 | 0 | 1 | 0 |
| Illegal | | 1 | 0 | 1 | 1 |
| Illegal | | 1 | 1 | 0 | 0 |
| Illegal | | 1 | 1 | 0 | 1 |
| Illegal | | 1 | 1 | 1 | 0 |
| Illegal | | 1 | 1 | 1 | 1 |

Copyright © 2012–2015, Texas Instruments Incorporated

#### 7.6.2.8 Soft Mute Register (0x0F)

Do not use this register if using the remapped output mixer configuration.

**Table 22. Soft Mute Register Format**

| D7 | D6 | D5 | D4 | D3 | D2 | D1 | D0 | FUNCTION |
|---|---|---|---|---|---|---|---|---|
| – | – | – | – | – | – | – | 1 | Soft mute channel 1 |
| – | – | – | – | – | – | 1 | – | Soft mute channel 2 |
| – | – | – | – | – | 1 | – | – | Soft mute channel 3 |
| – | – | – | – | 1 | – | – | – | Soft mute channel 4 |
| – | – | – | 1 | – | – | – | – | Soft mute channel 5 |
| – | – | 1 | – | – | – | – | – | Soft mute channel 6 |
| – | 1 | – | – | – | – | – | – | Soft mute channel 7 |
| 1 | – | – | – | – | – | – | – | Soft mute channel 8 |
| **0** | **0** | **0** | **0** | **0** | **0** | **0** | **0** | **Unmute all channels** |

#### 7.6.2.9 Energy Manager Status Register (0x10)

These bits are sticky and will be cleared only when a '0' is written into these bits through $I^2C$ interface.

**Table 23. Energy Manager Register Format**

| D7 | D6 | D5 | D4 | D3 | D2 | D1 | D0 | FUNCTION |
|---|---|---|---|---|---|---|---|---|
| – | – | – | – | – | – | – | **0** | **Energy above the low threshold for satellite channels** |
| – | – | – | – | – | – | – | 1 | Energy below the low threshold for satellite channels |
| – | – | – | – | – | – | 0 | – | Energy below the high threshold for satellite channels |
| – | – | – | – | – | – | **1** | – | **Energy above the high threshold for satellite channels** |
| – | – | – | – | – | **0** | – | – | **Energy above the low threshold for sub-woofer channels** |
| – | – | – | – | – | 1 | – | – | Energy below the low threshold for sub-woofer channels |
| – | – | – | – | 0 | – | – | – | Energy below the high threshold for sub-woofer channels |
| – | – | – | – | **1** | – | – | – | **Energy above the high threshold for sub-woofer channels** |


Copyright © 2012–2015, Texas Instruments Incorporated

### 7.6.2.10 Automute Control Register (0x14)

**Table 24. Automute Control Register Format**

| D7 | D6 | D5 | D4 | D3 | D2 | D1 | D0 | FUNCTION |
|---|---|---|---|---|---|---|---|---|
| – | – | – | – | 0 | 0 | 0 | 0 | Set input automute and output automute delay to 2.98 ms |
| – | – | – | – | 0 | 0 | 0 | 1 | Set input automute and output automute delay to 4.47 ms |
| – | – | – | – | 0 | 0 | 1 | 0 | Set input automute and output automute delay to 5.96 ms |
| – | – | – | – | 0 | 0 | 1 | 1 | Set input automute and output automute delay to 7.45 ms |
| – | – | – | – | **0** | **1** | **0** | **0** | **Set input automute and output automute delay to 14.9 ms** |
| – | – | – | – | 0 | 1 | 0 | 1 | Set input automute and output automute delay to 29.8 ms |
| – | – | – | – | 0 | 1 | 1 | 0 | Set input automute and output automute delay to 44.7 ms |
| – | – | – | – | 0 | 1 | 1 | 1 | Set input automute and output automute delay to 59.6 ms |
| – | – | – | – | 1 | 0 | 0 | 0 | Set input automute and output automute delay to 74.5 ms |
| – | – | – | – | 1 | 0 | 0 | 1 | Set input automute and output automute delay to 89.4 ms |
| – | – | – | – | 1 | 0 | 1 | 0 | Set input automute and output automute delay to 104.3 ms |
| – | – | – | – | 1 | 0 | 1 | 1 | Set input automute and output automute delay to 119.2 ms |
| – | – | – | – | 1 | 1 | 0 | 0 | Set input automute and output automute delay to 134.1 ms |
| – | – | – | – | 1 | 1 | 0 | 1 | Set input automute and output automute delay to 149 ms |
| – | – | – | – | 1 | 1 | 1 | 0 | Set input automute and output automute delay to 163.9 ms |
| – | – | – | – | 1 | 1 | 1 | 1 | Set input automute and output automute delay to 178.8 ms |
| 0 | 0 | 0 | 0 | – | – | – | | Set input automute threshold less than -90dBFS |
| 0 | 0 | 0 | 1 | – | – | – | – | Set input automute threshold less than -84dBFS |
| 0 | 0 | 1 | 0 | – | – | – | – | Set input automute threshold less than -78dBFS |
| 0 | 0 | 1 | 1 | – | – | – | – | Set input automute threshold less than -72dBFS |
| **0** | **1** | **0** | **0** | – | – | – | – | **Set input automute threshold less than -66dBFS** |
| 0 | 1 | 0 | 1 | – | – | – | – | Set input automute threshold less than -60dBFS |
| 0 | 1 | 1 | 0 | – | – | – | – | Set input automute threshold less than -54dBFS |
| 1 | 1 | 1 | 1 | – | – | – | – | Set input automute threshold less than -48dBFS |
| 1 | 0 | 0 | 0 | – | – | – | – | Set input automute threshold less than -42dBFS |
| 1 | 0 | 0 | 1 | – | – | – | – | RESERVED |
| 1 | 0 | 1 | 0 | – | – | – | – | RESERVED |
| 1 | 0 | 1 | 1 | – | – | – | – | RESERVED |
| 1 | 1 | 0 | 0 | – | – | – | – | RESERVED |
| 1 | 1 | 0 | 1 | – | – | – | – | RESERVED |
| 1 | 1 | 1 | 0 | – | – | – | – | RESERVED |
| 1 | 1 | 1 | 1 | – | – | – | – | RESERVED |

Automute threshold are in dB with respect to a full-scale input signal. The thresholds are approximate.

#### 7.6.2.11 Output Automute PWM Threshold and Back-End Reset Period Register (0x15)

For more information on how to use this register, see *Automute and Mute Channel Controls*,

**Table 25. Automute PWM Threshold and Back-End Reset Period Register Format**

| D7 | D6 | D5 | D4 | D3 | D2 | D1 | D0 | FUNCTION |
|---|---|---|---|---|---|---|---|---|
| **0** | **0** | **0** | **0** | – | – | – | – | **Set PWM automute threshold equal to input automute threshold** |
| 0 | 0 | 0 | 1 | – | – | – | – | Set PWM automute threshold +6dB over input automute threshold |
| 0 | 0 | 1 | 0 | – | – | – | – | Set PWM automute threshold +12dB over input automute threshold |
| 0 | 0 | 1 | 1 | – | – | – | – | Set PWM automute threshold +18dB over input automute threshold |
| 0 | 1 | 0 | 0 | – | – | – | – | Set PWM automute threshold +24dB over input automute threshold |
| 0 | 1 | 0 | 1 | – | – | – | – | Set PWM automute threshold +30dB over input automute threshold |
| 0 | 1 | 1 | 0 | – | – | – | – | Set PWM automute threshold +36dB over input automute threshold |
| 0 | 1 | 1 | 1 | – | – | – | – | Set PWM automute threshold +42dB over input automute threshold |
| 1 | 0 | 0 | 0 | – | – | – | – | Set PWM automute threshold equal to input automute threshold |
| 1 | 0 | 0 | 1 | – | – | – | – | Set PWM automute threshold -6dB below input automute threshold |
| 1 | 0 | 1 | 0 | – | – | – | – | Set PWM automute threshold -12dB below input automute threshold |
| 1 | 0 | 1 | 1 | – | – | – | – | Set PWM automute threshold -18dB below input automute threshold |
| 1 | 1 | 0 | 0 | – | – | – | – | Set PWM automute threshold -24dB below input automute threshold |
| 1 | 1 | 0 | 1 | – | – | – | – | Set PWM automute threshold -30dB below input automute threshold |
| 1 | 1 | 1 | 0 | – | – | – | – | Set PWM automute threshold -36dB below input automute threshold |
| 1 | 1 | 1 | 1 | – | – | – | – | Set PWM automute threshold -42dB below input automute threshold |
| – | – | – | – | 0 | 0 | 0 | 0 | Set back-end reset period < 1 ms |
| – | – | – | – | 0 | 0 | 0 | 1 | Set back-end reset period 70 ms |
| – | – | – | – | **0** | **0** | **1** | **0** | **Set back-end reset period 80 ms** |
| – | – | – | – | 0 | 0 | 1 | 1 | Set back-end reset period 220 ms |
| – | – | – | – | 0 | 1 | 0 | 0 | Set back-end reset period 360 ms |
| – | – | – | – | 0 | 1 | 0 | 1 | Set back-end reset period 500 ms |
| – | – | – | – | 0 | 1 | 1 | 0 | Set back-end reset period 660 ms |
| – | – | – | – | 0 | 1 | 1 | 1 | Set back-end reset period 800 ms |
| – | – | – | – | 1 | 0 | 0 | 0 | Set back-end reset period 940 ms |
| – | – | – | – | 1 | 0 | 0 | 1 | Set back-end reset period 1080 ms |
| – | – | – | – | 1 | 0 | 1 | 0 | Set back-end reset period 1220 ms |
| – | – | – | – | 1 | 0 | 1 | 1 | Set back-end reset period 1220 ms |
| – | – | – | – | 1 | 1 | X | X | Set back-end reset period 1220 ms |

PWM Automute is in dB with respect to Input Automute Threshold. The Thresholds are approximate.


Copyright © 2012–2015, Texas Instruments Incorporated

#### *7.6.2.12 Modulation Index Limit Register (0x16, 0x17, 0x18, 0x19)*

Note that some power stages require a lower modulation limit than the default of 93.7%. Contact Texas Instruments for more details about the requirements for a particular power stage.

**Table 26. Modulation Limit Register Format**

| Di+3 | Di+2 | Di+1 | Di (i=0 or 4) | LIMIT [DCLKs] | MIN WIDTH [DCLKs] | MODULATION INDEX |
|---|---|---|---|---|---|---|
| 0 | 0 | 0 | 0 | 1 | 2 | 99.21% |
| 0 | 0 | 0 | 1 | 2 | 4 | 98.43% |
| 0 | 0 | 1 | 0 | 3 | 6 | 97.64% |
| 0 | 0 | 1 | 1 | 4 | 8 | 96.85% |
| 0 | 1 | 0 | 0 | 5 | 10 | 96.06% |
| 0 | 1 | 0 | 1 | 6 | 12 | 95.28% |
| 0 | 1 | 1 | 0 | 7 | 14 | 94.49% |
| **0** | **1** | **1** | **1** | **8** | **16** | **93.70%** |
| 1 | 0 | 0 | 0 | 9 | 18 | 92.91% |
| 1 | 0 | 0 | 1 | 10 | 20 | 92.13% |
| 1 | 0 | 1 | 0 | 11 | 22 | 91.34% |
| 1 | 0 | 1 | 1 | 12 | 24 | 90.55% |
| 1 | 1 | 0 | 0 | 13 | 26 | 89.76% |
| 1 | 1 | 0 | 1 | 14 | 28 | 88.98% |
| 1 | 1 | 1 | 0 | 15 | 30 | 88.19% |
| 1 | 1 | 1 | 1 | 16 | 32 | 87.40% |

There are 512 DCLK Cycles per PWM frame.

**Table 27. Modulation Index Limit Register**

| Register Address | D7 | D6 | D5 | D4 | D3 | D2 | D1 | D0 |
|---|---|---|---|---|---|---|---|---|
| x16 | Modulation limit for channel 2 | | | | Modulation limit for channel 1 | | | |
| x17 | Modulation limit for channel 4 | | | | Modulation limit for channel 3 | | | |
| x18 | Modulation limit for channel 6 | | | | Modulation limit for channel 5 | | | |
| x19 | Modulation limit for channel 8 | | | | Modulation limit for channel 7 | | | |

#### *7.6.2.13 AD Mode - 8 Interchannel Channel Delay and Global Offset Registers (0x1B to 0x23)*

Interchannel delay is used to distribute the switching current of each channel, to ease the peak power draw on the PSU. It's also used to control the intermodulation between the channels, therefore improving THD in some cases.

DCLK is the oversampling clock of the PWM.

DCLK on the TAS5548 will be constant, unless some AM avoidance modes are used.

Each channel can have its channel delay set between -128 to +124. (4 DCLK steps value (-32 to +31 over 5 bits))

Channels 0, 1, 2, 3, 4, 5, 6, 7 are mapped into (0x1B, 0x1C, 0x1D, 0x1E, 0x1F, 0x20, 0x21, 0x22) with bits D[7:2] used to program individual DCLK delay. Bit D[1:0] are reserved in each register.

A Global offset can be used in register 0x23

**Table 28. Interchannel Delay Register Format (0x1B to 0x22)**

| D7 | D6 | D5 | D4 | D3 | D2 | FUNCTION |
|---|---|---|---|---|---|---|
| **0** | **0** | **0** | **0** | **0** | **0** | **Minimum absolute delay, 0 DCLK cycles** |
| 0 | 1 | 1 | 1 | 1 | 1 | Maximum positive delay, 31(×4) DCLK cycles |
| 1 | 0 | 0 | 0 | 0 | 0 | Maximum Negative delay, –32(×4) DCLK cycles |
| **1** | **0** | **0** | **0** | **0** | **0** | **Default Value for channel 0 = -128 DCLK's (–32*4)** |
| **0** | **0** | **0** | **0** | **0** | **0** | **Default Value for channel 1 = 0** |
| **1** | **1** | **0** | **0** | **0** | **0** | **Default Value for channel 2 = -64DCLK's (–16*4)** |
| **0** | **1** | **0** | **0** | **0** | **0** | **Default Value for channel 3 = 64 DCLK's (16*4)** |
| **1** | **0** | **1** | **0** | **0** | **0** | **Default Value for channel 4 = -96 DCLK's (–24*4)** |
| **0** | **0** | **1** | **0** | **0** | **0** | **Default Value for channel 5 = 32 DCLK's (8*4)** |
| **1** | **1** | **1** | **0** | **0** | **0** | **Default Value for channel 6 = -32 DCLK's (–8*4)** |
| **0** | **1** | **1** | **0** | **0** | **0** | **Default Value for channel 7 = 96 DCLK's (24*4)** |

**Table 29. Interchannel Delay Global Offset (0x23) (AD PWM Mode Only)**

| D7 | D6 | D5 | D4 | D3 | D2 | D1 | D0 | FUNCTION |
|---|---|---|---|---|---|---|---|---|
| **0** | **0** | **0** | **0** | **0** | **0** | **0** | **0** | **Minimum absolute offset, 0 DCLK cycles, Default for channel 0** |
| 1 | 1 | 1 | 1 | 1 | 1 | 1 | 1 | Maximum absolute delay, 255 DCLK cycles |


Copyright © 2012–2015, Texas Instruments Incorporated

#### 7.6.2.14 Special Low Z and Mid Z Ramp/Stop Period (0x24)

This is also the delay period for delayed start/stop with legacy LowZ sequences. If register 0x25 is programmed for special LowZ sequence, the time above is the PWM ramp up period. If it is programmed for MidZ, the time above is the PWM stop period.

| D7 | D6 | D5 | D4 | D3 | D2 | D1 | D0 | FUNCTION |
|---|---|---|---|---|---|---|---|---|
| – | – | – | 0 | 0 | – | – | – | No Ramp/Stop period |
| – | – | – | 0 | 1 | 0 | 0 | 0 | 14.9 ms Ramp/Stop period |
| – | – | – | 0 | 1 | 0 | 0 | 1 | 22.35 ms Ramp/Stop period |
| – | – | – | 0 | 1 | 0 | 1 | 0 | 29.80 ms Ramp/Stop period |
| – | – | – | 0 | 1 | 0 | 1 | 1 | 38.74 ms Ramp/Stop period |
| – | – | – | 0 | 1 | 1 | 0 | 0 | 52.15 ms Ramp/Stop period |
| – | – | – | 0 | 1 | 1 | 0 | 1 | 68.54 ms Ramp/Stop period |
| – | – | – | 0 | 1 | 1 | 1 | 0 | 92.38 ms Ramp/Stop period |
| – | – | – | **0** | **1** | **1** | **1** | **1** | **123.67 ms Ramp/Stop period** |
| – | – | – | 1 | 0 | 0 | 0 | 0 | 149 ms Ramp/Stop period |
| – | – | – | 1 | 0 | 0 | 0 | 1 | 223.5 ms Ramp/Stop period |
| – | – | – | 1 | 0 | 0 | 1 | 0 | 298 ms Ramp/Stop period |
| – | – | – | 1 | 0 | .. | .. | .. | … |
| – | – | – | 1 | 0 | 1 | 1 | 1 | 1236.7 ms Ramp/Stop period |
| – | – | – | 1 | 1 | 0 | 0 | 0 | 1490 ms Ramp/Stop period |
| – | – | – | 1 | 1 | 0 | 0 | 1 | 2235 ms Ramp/Stop period |
| – | – | – | 1 | 1 | 0 | 1 | 0 | 2980 ms Ramp/Stop period |
| – | – | – | 1 | 1 | .. | .. | .. | … |
| – | – | – | 1 | 1 | 1 | 1 | 1 | 12367 ms Ramp/Stop period |

#### 7.6.2.15 PWM and EMO Control Register (0x25)

**Table 30. PWM Config, Energy Manager Reporting Register**

| D7 | D6 | D5 | D4 | D3 | D2 | D1 | D0 | FUNCTION |
|---|---|---|---|---|---|---|---|---|
| 0 | 0 | – | – | – | – | – | – | Use Legacy LowZ sequence for PWM start |
| **1** | **0** | – | – | – | – | – | – | **Use special LowZ sequence for PWM start** |
| 1 | 1 | – | – | – | – | – | – | Use MidZ sequence for external charge |
| | | **0** | – | – | – | – | – | **Ternary modulation disable** |
| | | 1 | – | – | – | – | – | Ternary modulation enable |
| | | | **0** | – | – | – | – | **Ternary High bias disable** |
| | | | 1 | – | – | – | – | Ternary High bias enable |
| | | | | **0** | – | – | – | Energy Manager LO threshold reporting disable ← default |
| | | | | 1 | – | – | – | **Energy Manager LO threshold reporting enable** |
| – | – | – | – | – | **0** | **0** | **0** | Reserved ← Default |

#### 7.6.2.16 Individual Channel Shutdown (0x27)

**Table 31. Individual Channel Shutdown Register**

| D7 | D6 | D5 | D4 | D3 | D2 | D1 | D0 | FUNCTION |
|---|---|---|---|---|---|---|---|---|
| 1 | – | – | – | – | – | – | – | Keep channel 8 in shutdown |
| **0** | – | – | – | – | – | – | – | **Bring Channel 8 out of shutdown** |
| – | 1 | – | – | – | – | – | – | Keep channel 7 in shutdown |
| – | **0** | – | – | – | – | – | – | **Bring Channel 7 out of shutdown** |
| – | – | 1 | – | – | – | – | – | Keep channel 6 in shutdown |

**Table 31. Individual Channel Shutdown Register (continued)**

| D7 | D6 | D5 | D4 | D3 | D2 | D1 | D0 | FUNCTION |
|---|---|---|---|---|---|---|---|---|
| – | – | **0** | – | – | – | – | – | **Bring Channel 6 out of shutdown** |
| – | – | – | 1 | – | – | – | – | Keep channel 5 in shutdown |
| – | – | – | **0** | – | – | – | – | **Bring Channel 5 out of shutdown** |
| – | – | – | – | 1 | – | – | – | Keep channel 4 in shutdown |
| – | – | – | – | **0** | – | – | – | **Bring Channel 4 out of shutdown** |
| – | – | – | – | – | 1 | – | – | Keep channel 3 in shutdown |
| – | – | – | – | – | **0** | – | – | **Bring Channel 3 out of shutdown** |
| – | – | – | – | – | – | 1 | – | Keep channel 2 in shutdown |
| – | – | – | – | – | – | **0** | – | **Bring Channel 2 out of shutdown** |
| – | – | – | – | – | – | – | 1 | Keep channel 1 in shutdown |
| – | – | – | – | – | – | – | **0** | **Bring Channel 1 out of shutdown** |

Individual channel shutdown register should be written prior to bringing system out of shutdown using reg 0x03 (Exit Shutdown).

### *7.6.2.17 Input Mux Registers (0x30, 0x31, 0x32, 0x33)*

**Table 32. Input Mux Registers Format**

| Register Address | Default Value | D7 | D6 | D5 | D4 | D3 | D2 | D1 | D0 |
|---|---|---|---|---|---|---|---|---|---|
| x30 | **00000001** | BD (1)/AD (0) mode ch 1 | Input Mux select for channel 1 | | | BD (1)/AD (0) mode ch 2 | Input Mux select for channel 2 | | |
| x31 | **00100011** | BD (1)/AD (0) mode ch 3 | Input Mux select for channel 3 | | | BD (1)/AD (0) mode ch 4 | Input Mux select for channel 4 | | |
| x32 | **01000101** | BD (1)/AD (0) mode ch 5 | Input Mux select for channel 5 | | | BD (1)/AD (0) mode ch 6 | Input Mux select for channel 6 | | |
| x33 | **01100111** | BD (1)/AD (0) mode ch 7 | Input Mux select for channel 7 | | | BD (1)/AD (0) mode ch 8 | Input Mux select for channel 8 | | |

**Table 33. Input Mux Registers Format**

| D6/D2 | D5/D1 | D4/D0 | FUNCTION |
|---|---|---|---|
| 0 | 0 | 0 | Select channel 1 |
| 0 | 0 | 1 | Select channel 2 |
| 0 | 1 | 0 | Select channel 3 |
| 0 | 1 | 1 | Select channel 4 |
| 1 | 0 | 0 | Select channel 5 |
| 1 | 0 | 1 | Select channel 6 |
| 1 | 1 | 0 | Select channel 7 |
| 1 | 1 | 1 | Select channel 8 |

### *7.6.2.18 PWM Mux Registers (0x34, 0x35, 0x36, 0x37)*

**Table 34. PWM Mux Registers Format**

| Register Address | Default Value | D7 | D6 | D5 | D4 | D3 | D2 | D1 | D0 |
|---|---|---|---|---|---|---|---|---|---|
| x34 | **00000001** | unused | PWM Mux select for channel 1 | | | unused | PWM Mux select for channel 2 | | |
| x35 | **00100011** | unused | PWM Mux select for channel 3 | | | unused | PWM Mux select for channel 4 | | |
| x36 | **01000101** | unused | PWM Mux select for channel 5 | | | unused | PWM Mux select for channel 6 | | |
| x37 | **01100111** | unused | PWM Mux select for channel 7 | | | unused | PWM Mux select for channel 8 | | |


Copyright © 2012–2015, Texas Instruments Incorporated

**Table 35. PWM Registers Format**

| D6/D2 | D5/D1 | D4/D0 | FUNCTION |
|---|---|---|---|
| 0 | 0 | 0 | Select channel 1 |
| 0 | 0 | 1 | Select channel 2 |
| 0 | 1 | 0 | Select channel 3 |
| 0 | 1 | 1 | Select channel 4 |
| 1 | 0 | 0 | Select channel 5 |
| 1 | 0 | 1 | Select channel 6 |
| 1 | 1 | 0 | Select channel 7 |
| 1 | 1 | 1 | Select channel 8 |

#### *7.6.2.19 BD Mode and Ternary - 8 Interchannel Channel Delay (0x38 to 0x3F)*

Interchannel delay is used to distribute the switching current of each channel, to ease the peak power draw on the PSU. It's also used to control the intermodulation between the channels, therefore improving THD in some cases.

DCLK is the oversampling clock of the PWM.

DCLK on the TAS5548 will be constant, unless some AM avoidance modes are used.

Each channel can have its channel delay set between -128 to +124. (4 DCLK steps value (-32 to +31 over 5 bits))

Channels 0, 1, 2, 3, 4, 5, 6, 7 are mapped into (0x38, 0x39, 0x3A, 0x3B, 0x3C, 0x3D, 0x3E, 0x3F) with bits D[7:2] used to program individual DCLK delay. Bit D[1:0] are reserved in each register.

**Table 36. Interchannel Delay Register Format (0x38B to 0x3F)**

| D7 | D6 | D5 | D4 | D3 | D2 | FUNCTION |
|---|---|---|---|---|---|---|
| **0** | **0** | **0** | **0** | **0** | **0** | **Minimum absolute delay, 0 DCLK cycles** |
| 0 | 1 | 1 | 1 | 1 | 1 | Maximum positive delay, 31(×4) DCLK cycles |
| 1 | 0 | 0 | 0 | 0 | 0 | Maximum Negative delay, –32(×4) DCLK cycles |
| **1** | **0** | **0** | **0** | **0** | **0** | **Default Value for channel 0 = -128 DCLK's (–32*4)** |
| **0** | **0** | **0** | **0** | **0** | **0** | **Default Value for channel 1 0** |
| **1** | **1** | **0** | **0** | **0** | **0** | **Default Value for channel 2 = -64DCLK's (–16*4)** |
| **0** | **1** | **0** | **0** | **0** | **0** | **Default Value for channel 3 = 64 DCLK's (16*4)** |
| **1** | **0** | **1** | **0** | **0** | **0** | **Default Value for channel 4 = -96 DCLK's (–24*4)** |
| **0** | **0** | **1** | **0** | **0** | **0** | **Default Value for channel 5 = 32 DCLK's (8*4)** |
| **1** | **1** | **1** | **0** | **0** | **0** | **Default Value for channel 6 = -32 DCLK's (–8*4)** |
| **0** | **1** | **1** | **0** | **0** | **0** | **Default Value for channel 7 = 96 DCLK's (24*4)** |

### 7.6.2.20 Input Mixer Registers, Channels 1–8 (0x41–0x48)

Input mixers 1, 2, 3, 4, 5, 6, 7, and 8 are mapped into registers 0x41, 0x42, 0x43, 0x44, 0x45, 0x46, 0x47, and 0x48, respectively.

Each gain coefficient is in 28-bit (5.23) format, so 0x80 0000 is a gain of 1. Each gain coefficient is written as a 32-bit word with the upper four bits reserved. For eight gain coefficients, the total is 32 bytes.

There is no negative value available. The mixer cannot phase invert.

**Bold** indicates the one channel that is passed through the mixer.

**Table 37. Channel 1–8 Input Mixer Register Format**

| $I^2C$ SUBADDRESS | TOTAL BYTES | REGISTER FIELDS | DESCRIPTION OF CONTENTS | DEFAULT STATE |
|---|---|---|---|---|
| 0x41 | 32 | **A_to_ipmix[1]** | **SDIN1-left (Ch1) A to input mixer 1 coefficient (default = 1)** | **0080 0000** |
| | | B_to_ipmix[1] | SDIN1-right (Ch2) B to input mixer 1 coefficient (default = 0) | 0000 0000 |
| | | C_to_ipmix[1] | SDIN2-left (Ch3) C to input mixer 1 coefficient (default = 0) | 0000 0000 |
| | | D_to_ipmix[1] | SDIN2-right (Ch4) D to input mixer 1 coefficient (default = 0) | 0000 0000 |
| | | E_to_ipmix[1] | SDIN3-left (Ch5) E to input mixer 1 coefficient (default = 0) | 0000 0000 |
| | | F_to_ipmix[1] | SDIN3-right (Ch6) F to input mixer 1 coefficient (default = 0) | 0000 0000 |
| | | G_to_ipmix[1] | SDIN4-left (Ch7) G to input mixer 1 coefficient (default = 0) | 0000 0000 |
| | | H_to_ipmix[1] | SDIN4-right (Ch8) H to input mixer 1 coefficient (default = 0) | 0000 0000 |
| 0x42 | 32 | A_to_ipmix[2] | SDIN1-left (Ch1) A to input mixer 2 coefficient (default = 0) | 0000 0000 |
| | | **B_to_ipmix[2]** | **SDIN1-right (Ch2) B to input mixer 2 coefficient (default = 1)** | **0080 0000** |
| | | C_to_ipmix[2] | SDIN2-left (Ch3) C to input mixer 2 coefficient (default = 0) | 0000 0000 |
| | | D_to_ipmix[2] | SDIN2-right (Ch4) D to input mixer 2 coefficient (default = 0) | 0000 0000 |
| | | E_to_ipmix[2] | SDIN3-left (Ch5) E to input mixer 2 coefficient (default = 0) | 0000 0000 |
| | | F_to_ipmix[2] | SDIN3-right (Ch6) F to input mixer 2 coefficient (default = 0) | 0000 0000 |
| | | G_to_ipmix[2] | SDIN4-left (Ch7) G to input mixer 2 coefficient (default = 0) | 0000 0000 |
| | | H_to_ipmix[2] | SDIN4-right (Ch8) H to input mixer 2 coefficient (default = 0) | 0000 0000 |
| 0x43 | 32 | A_to_ipmix[3] | SDIN1-left (Ch1) A to input mixer 3 coefficient (default = 0) | 0000 0000 |
| | | B_to_ipmix[3] | SDIN1-right (Ch2) B to input mixer 3 coefficient (default = 0) | 0000 0000 |
| | | **C_to_ipmix[3]** | **SDIN2-left (Ch3) C to input mixer 3 coefficient (default = 1)** | **0080 0000** |
| | | D_to_ipmix[3] | SDIN2-right (Ch4) D to input mixer 3 coefficient (default = 0) | 0000 0000 |
| | | E_to_ipmix[3] | SDIN3-left (Ch5) E to input mixer 3 coefficient (default = 0) | 0000 0000 |
| | | F_to_ipmix[3] | SDIN3-right (Ch6) F to input mixer 3 coefficient (default = 0) | 0000 0000 |
| | | G_to_ipmix[3] | SDIN4-left (Ch7) G to input mixer 3 coefficient (default = 0) | 0000 0000 |
| | | H_to_ipmix[3] | SDIN4-right (Ch8) H to input mixer 3 coefficient (default = 0) | 0000 0000 |
| 0x44 | 32 | A_to_ipmix[4] | SDIN1-left (Ch1) A to input mixer 4 coefficient (default = 0) | 0000 0000 |
| | | B_to_ipmix[4] | SDIN1-right (Ch2) B to input mixer 4 coefficient (default = 0) | 0000 0000 |
| | | C_to_ipmix[4] | SDIN2-left (Ch3) C to input mixer 4 coefficient (default = 0) | 0000 0000 |
| | | **D_to_ipmix[4]** | **SDIN2-right (Ch4) D to input mixer 4 coefficient (default = 1)** | **0080 0000** |
| | | E_to_ipmix[4] | SDIN3-left (Ch5) E to input mixer 4 coefficient (default = 0) | 0000 0000 |
| | | F_to_ipmix[4] | SDIN3-right (Ch6) F to input mixer 4 coefficient (default = 0) | 0000 0000 |
| | | G_to_ipmix[4] | SDIN4-left (Ch7) G to input mixer 4 coefficient (default = 0) | 0000 0000 |
| | | H_to_ipmix[4] | SDIN4-right (Ch8) H to input mixer 4 coefficient (default = 0) | 0000 0000 |


Copyright © 2012–2015, Texas Instruments Incorporated

**Table 37. Channel 1–8 Input Mixer Register Format (continued)**

| I²C SUBADDRESS | TOTAL BYTES | REGISTER FIELDS | DESCRIPTION OF CONTENTS | DEFAULT STATE |
|---|---|---|---|---|
| 0x45 | 32 | A_to_ipmix[5] | SDIN1-left (Ch1) A to input mixer 5 coefficient (default = 0) | 0000 0000 |
| | | B_to_ipmix[5] | SDIN1-right (Ch2) B to input mixer 5 coefficient (default = 0) | 0000 0000 |
| | | C_to_ipmix[5] | SDIN2-left (Ch3) C to input mixer 5 coefficient (default = 0) | 0000 0000 |
| | | D_to_ipmix[5] | SDIN2-right (Ch4) D to input mixer 5 coefficient (default = 0) | 0000 0000 |
| | | **E_to_ipmix[5]** | **SDIN3-left (Ch5) E to input mixer 5 coefficient (default = 1)** | **0080 0000** |
| | | F_to_ipmix[5] | SDIN3-right (Ch6) F to input mixer 5 coefficient (default = 0) | 0000 0000 |
| | | G_to_ipmix[5] | SDIN4-left (Ch7) G to input mixer 5 coefficient (default = 0) | 0000 0000 |
| | | H_to_ipmix[5] | SDIN4-right (Ch8) H to input mixer 5 coefficient (default = 0) | 0000 0000 |
| 0x46 | 32 | A_to_ipmix[6] | SDIN1-left (Ch1) A to input mixer 6 coefficient (default = 0) | 0000 0000 |
| | | B_to_ipmix[6] | SDIN1-right (Ch2) B to input mixer 6 coefficient (default = 0) | 0000 0000 |
| | | C_to_ipmix[6] | SDIN2-left (Ch3) C to input mixer 6 coefficient (default = 0) | 0000 0000 |
| | | D_to_ipmix[6] | SDIN2-right (Ch4) D to input mixer 6 coefficient (default = 0) | 0000 0000 |
| | | E_to_ipmix[6] | SDIN3-left (Ch5) E to input mixer 6 coefficient (default = 0) | 0000 0000 |
| | | **F_to_ipmix[6]** | **SDIN3-right (Ch6) F to input mixer 6 coefficient (default = 1)** | **0080 0000** |
| | | G_to_ipmix[6] | SDIN4-left (Ch7) G to input mixer 6 coefficient (default = 0) | 0000 0000 |
| | | H_to_ipmix[6] | SDIN4-right (Ch8) H to input mixer 6 coefficient (default = 0) | 0000 0000 |
| 0x47 | 32 | A_to_ipmix[7] | SDIN1-left (Ch1) A to input mixer 7 coefficient (default = 0) | 0000 0000 |
| | | B_to_ipmix[7] | SDIN1-right (Ch2) B to input mixer 7 coefficient (default = 0) | 0000 0000 |
| | | C_to_ipmix[7] | SDIN2-left (Ch3) C to input mixer 7 coefficient (default = 0) | 0000 0000 |
| | | D_to_ipmix[7] | SDIN2-right (Ch4) D to input mixer 7 coefficient (default = 0) | 0000 0000 |
| | | E_to_ipmix[7] | SDIN3-left (Ch5) E to input mixer 7 coefficient (default = 0) | 0000 0000 |
| | | F_to_ipmix[7] | SDIN3-right (Ch6) F to input mixer 7 coefficient (default = 0) | 0000 0000 |
| | | **G_to_ipmix[7]** | **SDIN4-left (Ch7) G to input mixer 7 coefficient (default = 1)** | **0080 0000** |
| | | H_to_ipmix[7] | SDIN4-right (Ch8) H to input mixer 7 coefficient (default = 0) | 0000 0000 |
| 0x48 | 32 | A_to_ipmix[8] | SDIN1-left (Ch1) A to input mixer 8 coefficient (default = 0) | 0000 0000 |
| | | B_to_ipmix[8] | SDIN1-right (Ch2) B to input mixer 8 coefficient (default = 0) | 0000 0000 |
| | | C_to_ipmix[8] | SDIN2-left (Ch3) C to input mixer 8 coefficient (default = 0) | 0000 0000 |
| | | D_to_ipmix[8] | SDIN2-right (Ch4) D to input mixer 8 coefficient (default = 0) | 0000 0000 |
| | | E_to_ipmix[8] | SDIN3-left (Ch5) E to input mixer 8 coefficient (default = 0) | 0000 0000 |
| | | F_to_ipmix[8] | SDIN3-right (Ch6) F to input mixer 8 coefficient (default = 0) | 0000 0000 |
| | | G_to_ipmix[8] | SDIN4-left (Ch7) G to input mixer 8 coefficient (default = 0) | 0000 0000 |
| | | **H_to_ipmix[8]** | **SDIN4-right (Ch8) H to input mixer 8 coefficient (default = 1)** | **0080 0000** |

Copyright © 2012–2015, Texas Instruments Incorporated

#### 7.6.2.21 Bass Mixer Registers (0x49–0x50)

Registers 0x49–0x50 provide configuration control for bass mangement.

Each gain coefficient is in 28-bit (5.23) format, so 0x80 0000 is a gain of 1. Each gain coefficient is written as a 32-bit word with the upper four bits reserved.

There is no negative value available. The mixer cannot phase invert.

**Table 38. Bass Mixer Register Format**

| SUB-ADDRESS | TOTAL BYTES | REGISTER NAME | DESCRIPTION OF CONTENTS | DEFAULT STATE |
|---|---|---|---|---|
| 0x49 | 4 | ipmix_1_to_ch8 | Input mixer 1 to Ch8 mixer coefficient (default = 0)<br>u[31:28], ipmix18[27:24], ipmix18[23:16], ipmix18[15:8], ipmix18[7:0] | **0000 0000** |
| 0x4A | 4 | ipmix_2_to_ch8 | Input mixer 2 to Ch8 mixer coefficient (default = 0)<br>u[31:28], ipmix28[27:24], ipmix28[23:16], ipmix28[15:8], ipmix28[7:0] | **0000 0000** |
| 0x4B | 4 | ipmix_7_to_ch12 | Ch7 biquad-2 output to Ch1 mixer and Ch2 mixer coefficient (default = 0)<br>u[31:28], ipmix72[27:24], ipmix72[23:16], ipmix72[15:8], ipmix72[7:0] | **0000 0000** |
| 0x4C | 4 | Ch7_bp_bq2 | Ch7 biquad-2 bypass coefficient (default = 0)<br>u[31:28], ch7_bp_bq2[27:24], ch7_bp_bq2[23:16], ch7_bp_bq2[15:8], ch7_bp_bq2[7:0] | **0000 0000** |
| 0x4D | 4 | Ch7_bq2 | Ch7 biquad-2 inline coefficient (default = 1)<br>u[31:28], ch6_bq2[27:24], ch6_bq2[23:16], ch6_bq2[15:8], ch6_bq2[7:0] | **0080 0000** |
| 0x4E | 4 | ipmix_8_to_ch12 | Ch8 biquad-2 output to Ch1 mixer and Ch2 mixer coefficient (default = 0)<br>u[31:28], ipmix8_12[27:24], ipmix8_12[23:16], ipmix8_12[15:8], ipmix8_12[7:0] | **0000 0000** |
| 0x4F | 4 | Ch8_bp_bq2 | Ch8 biquad-2 bypass coefficient (default = 0)<br>u[31:28], ch8_bp_bq2[27:24], ch8_bp_bq2[23:16], ch8_bp_bq2[15:8], ch8_bp_bq2[7:0] | **0000 0000** |
| 0x50 | 4 | Ch8_bq2 | Ch8 biquad-2 inline coefficient (default = 1)<br>u[31:28], ch7_bq2[27:24], ch7_bq2[23:16], ch7_bq2[15:8], ch7_bq2[7:0] | **0080 0000** |

#### 7.6.2.22 Biquad Filter Register (0x51–0x88)

**Table 39. Biquad Filter Register Format**

| $I^2C$ SUBADDRESS | TOTAL BYTES | REGISTER NAME | DESCRIPTION OF CONTENTS | DEFAULT STATE |
|---|---|---|---|---|
| 0x51–0x57 | 20/reg. | Ch1_bq[1:7] | Ch1 biquads 1–7. See Table 40 for bit definition. | See Table 40 |
| 0x58–0x5E | 20/reg. | Ch2_bq[1:7] | Ch2 biquads 1–7. See Table 40 for bit definition. | See Table 40 |
| 0x5F–0x65 | 20/reg. | Ch3_bq[1:7] | Ch3 biquads 1–7. See Table 40 for bit definition. | See Table 40 |
| 0x66–0x6C | 20/reg. | Ch4_bq[1:7] | Ch4 biquads 1–7. See Table 40 for bit definition. | See Table 40 |
| 0x6D–0x73 | 20/reg. | Ch5_bq[1:7] | Ch5 biquads 1–7. See Table 40 for bit definition. | See Table 40 |
| 0x74–0x7A | 20/reg. | Ch6_bq[1:7] | Ch6 biquads 1–7. See Table 40 for bit definition. | See Table 40 |
| 0x7B–0x81 | 20/reg. | Ch7_bq[1:7] | Ch7 biquads 1–7. See Table 40 for bit definition. | See Table 40 |
| 0x82–0x88 | 20/reg. | Ch8_bq[1:7] | Ch8 biquads 1–7. See Table 40 for bit definition. | See Table 40 |


Copyright © 2012–2015, Texas Instruments Incorporated

Each gain coefficient is in 28-bit (5.23) format, so 0x80 0000 is a gain of 1. Each gain coefficient is written as a 32-bit word with the upper four bits not used.

**Table 40. Contents of One 20-Byte Biquad Filter Register (Default = All-Pass)**

| DESCRIPTION | REGISTER FIELD CONTENTS | DEFAULT GAIN COEFFICIENT VALUES | |
|---|---|---|---|
| | | DECIMAL | HEX |
| **$b_0$ coefficient** | **u[31:28], b0[27:24], b0[23:16], b0[15:8], b0[7:0]** | **1.0** | **0080 0000** |
| $b_1$ coefficient | u[31:28], b1[27:24], b1[23:16], b1[15:8], b1[7:0] | **0.0** | **0000 0000** |
| $b_2$ coefficient | u[31:28], b2[27:24], b2[23:16], b2[15:8], b2[7:0] | **0.0** | **0000 0000** |
| $a_1$ coefficient | u[31:28], a1[27:24], a1[23:16], a1[15:8], a1[7:0] | **0.0** | **0000 0000** |
| $a_2$ coefficient | u[31:28], a2[27:24], a2[23:16], a2[15:8], a2[7:0] | **0.0** | **0000 0000** |

### *7.6.2.23 Bass and Treble Register, Channels 1–8 (0x89–0x90)*

Channels 1, 2, 3, 4, 5, 6, 7, and 8 are mapped into registers 0x89, 0x8A, 0x8B, 0x8C, 0x8D, 0x8E, 0x8F, and 0x90, respectively. Eight bytes are written for each channel. Each gain coefficient is in 28-bit (5.23) format, so 0x80 0000 is a gain of 1. Each gain coefficient is written as a 32-bit word with the upper four bits reserved.

**Table 41. Channel 1–8 Bass and Treble Bypass Register Format**

| REGISTER NAME | TOTAL BYTES | CONTENTS | DEFAULT VALUE |
|---|---|---|---|
| Channel bass and treble bypass | 8 | Bypass | **0080 0000** |
| Channel bass and treble inline | | Inline | **0000 0000** |

### *7.6.2.24 Loudness Registers (0x91–0x95)*

**Table 42. Loudness Register Format**

| $I^2C$ SUB-ADDRESS | TOTAL BYTES | REGISTER NAME | DESCRIPTION OF CONTENTS | DEFAULT STATE |
|---|---|---|---|---|
| 0x91 | 4 | Loudness Log2 gain (LG) | u[31:28], LG[27:24], LG[23:16], LG[15:8], LG[7:0] | **0FC0 0000** |
| 0x92 | 4 | Loudness Log2 offset (LO) | LO[31:24], LO[23:16], LO[15:8], LO[7:0] | **0000 0000** |
| 0x93 | 4 | Loudness gain (G) | u[31:28], G[27:24], G[23:16], G[15:8], G[7:0] | **0000 0000** |
| 0x94 | 4 | Loudness offset lower 32 bits (O) | O[31:24], O[23:16], O[15:8], O[7:0] | **0000 0000** |
| 0x95 | 20 | Loudness biquad ($b_0$) | u[31:28], b0[27:24], b0[23:16], b0[15:8], b0[7:0] | **00FE 5045** |
| | | Loudness biquad ($b_1$) | u[31:28], b1[27:24], b1[23:16], b1[15:8], b1[7:0] | **0F81 AA27** |
| | | Loudness biquad ($b_2$) | u[31:28], b2[27:24], b2[23:16], b2[15:8], b2[7:0] | **0000 D513** |
| | | Loudness biquad ($a_1$) | u[31:28], a1[27:24], a1[23:16], a1[15:8], a1[7:0] | **0000 0000** |
| | | Loudness biquad ($a_2$) | u[31:28], a2[27:24], a2[23:16], a2[15:8], a2[7:0] | **0FFF 2AED** |

Copyright © 2012–2015, Texas Instruments Incorporated

### 7.6.2.25 DRC1 Control Register CH1-7 (0x96) – Write

DRC Control selects which channels contribute to the expansion/compression evaluation using DRC1. The evaluation is global such that if one signal forces compression all DRC1 signals will be in compression.

**Table 43. Write Register Format**

| D31 | D30 | D29 | D28 | D27 | D26 | D25 | D24 | FUNCTION |
|---|---|---|---|---|---|---|---|---|
| x | x | x | x | x | x | x | x | |
| | | | | | | | | |
| **D23** | **D22** | **D21** | **D20** | **D19** | **D18** | **D17** | **D16** | **FUNCTION** |
| x | x | x | x | x | x | x | x | |
| | | | | | | | | |
| **D15** | **D14** | **D13** | **D12** | **D11** | **D10** | **D9** | **D8** | **FUNCTION** |
| x | x | – | – | – | – | – | – | |
| **–** | **–** | **0** | **0** | – | – | – | – | **Channel 7: Not Included in DRC evaluation** |
| – | – | 0 | 1 | – | – | – | – | Channel 7: Pre-volume DRC evaluation |
| – | – | 1 | 0 | – | – | – | – | Channel 7: Post-volume DRC evaluation |
| – | – | 1 | 1 | – | – | – | – | Channel 7: Not Included in DRC evaluation |
| – | – | – | – | **0** | **0** | – | – | **Channel 6: Not Included in DRC evaluation** |
| – | – | – | – | 0 | 1 | – | – | Channel 6: Pre-volume DRC evaluation |
| – | – | – | – | 1 | 0 | – | – | Channel 6: Post-volume DRC evaluation |
| – | – | – | – | 1 | 1 | – | – | Channel 6: Not Included in DRC evaluation |
| – | – | – | – | – | – | 0 | 0 | Channel 5: Not Included in DRC evaluation |
| – | – | – | – | – | – | 0 | 1 | Channel 5: Pre-volume DRC evaluation |
| – | – | – | – | – | – | 1 | 0 | Channel 5: Post-volume DRC evaluation |
| – | – | – | – | – | – | 1 | 1 | Channel 5: Not Included in DRC evaluation |
| | | | | | | | | |
| **D7** | **D6** | **D5** | **D4** | **D3** | **D2** | **D1** | **D0** | **FUNCTION** |
| **0** | **0** | – | – | – | – | – | – | **Channel 4: Not Included in DRC evaluation** |
| 0 | 1 | – | – | – | – | – | – | Channel 4: Pre-volume DRC evaluation |
| 1 | 0 | – | – | – | – | – | – | Channel 4: Post-volume DRC evaluation |
| 1 | 1 | – | – | – | – | – | – | Channel 4: Not Included in DRC evaluation |
| – | – | **0** | **0** | – | – | – | – | **Channel 3: Not Included in DRC evaluation** |
| – | – | 0 | 1 | – | – | – | – | Channel 3: Pre-volume DRC evaluation |
| – | – | 1 | 0 | – | – | – | – | Channel 3: Post-volume DRC evaluation |
| – | – | 1 | 1 | – | – | – | – | Channel 3: Not Included in DRC evaluation |
| – | – | – | – | **0** | **0** | – | – | **Channel 2 : Not Included in DRC evaluation** |
| – | – | – | – | 0 | 1 | – | – | Channel 2: Pre-volume DRC evaluation |
| – | – | – | – | 1 | 0 | – | – | Channel 2: Post-volume DRC evaluation |
| – | – | – | – | 1 | 1 | – | – | Channel 2: Not Included in DRC evaluation |
| – | – | – | – | – | – | **0** | **0** | **Channel 1: Not Included in DRC evaluation** |
| – | – | – | – | – | – | 0 | 1 | Channel 1: Pre-volume DRC evaluation |
| – | – | – | – | – | – | 1 | 0 | Channel 1: Post-volume DRC evaluation |
| – | – | – | – | – | – | 1 | 1 | Channel 1: Not Included in DRC evaluation |


Copyright © 2012–2015, Texas Instruments Incorporated

### 7.6.2.26 DRC2 Control Register CH8 (0x97) – Write Register

DRC Control selects which channels contribute to the expansion/compression evaluation using DRC2. The evaluation is global such that if one signal forces compression all DRC2 signals will be in compression.

**Table 44. Write Register Format**

| D31 | D30 | D29 | D28 | D27 | D26 | D25 | D24 | FUNCTION |
|---|---|---|---|---|---|---|---|---|
| x | x | x | x | x | x | x | x | |
| **D23** | **D22** | **D21** | **D20** | **D19** | **D18** | **D17** | **D16** | **FUNCTION** |
| x | x | x | x | x | x | x | x | |
| **D15** | **D14** | **D13** | **D12** | **D11** | **D10** | **D9** | **D8** | **FUNCTION** |
| x | x | x | x | x | x | x | x | |
| **D7** | **D6** | **D5** | **D4** | **D3** | **D2** | **D1** | **D0** | **FUNCTION** |
| **x** | **x** | **x** | **x** | **x** | **x** | **0** | **0** | **Channel 8: Not included in DRC evaluation** |
| x | x | x | x | x | x | 0 | 1 | Channel 8: Pre-volume DRC |
| x | x | x | x | x | x | 1 | 0 | Channel 8: Post-volume DRC |
| x | x | x | x | x | x | 1 | 1 | Channel 8: Not included in DRC evaluation |

### 7.6.2.27 DRC1 Data Registers (0x98–0x9C)

DRC1 applies to channels 1, 2, 3, 4, 5, 6, and 7.

**Table 45. DRC1 Data Register Format**

| I²C SUB-ADDRESS | TOTAL BYTES | REGISTER NAME | DESCRIPTION OF CONTENTS | DEFAULT STATE | DATA DECIMAL |
|---|---|---|---|---|---|
| 0x98 | 8 | Channel 1, 2, 3, 4, 5, 6, and 7 DRC1 energy | u[31:28], E[27:24], E[23:16], E[15:8], E[7:0] | **0000 883F** | **mS** |
| | | Channel 1, 2, 3, 4, 5, 6, and 7 DRC1 (1 – energy) | u[31:28], 1–E[27:24], 1–E[23:16], 1–E[15:8], 1–E[7:0] | **007F 77C0** | |
| 0x99 | 8 | Channel 1, 2, 3, 4, 5, 6, and 7 DRC1 threshold lower 32 bits (T1) | T1[31:24], T1[23:16], T1[15:8], T1[7:0] | **0B20 E2B2** | **dB** |
| | | Channel 1, 2, 3, 4, 5, 6, and 7 DRC1 threshold lower 32 bits (T2) | T2[31:24], T2[23:16], T2[15:8], T2[7:0] | **06F9 DE58** | **dB** |
| 0x9A | 12 | Channel 1, 2, 3, 4, 5, 6, and 7 DRC1 slope (k0) | u[31:28], k0[27:24], k0[23:16], k0[15:8], k0[7:0] | **0040 0000** | **ratio** |
| | | Channel 1, 2, 3, 4, 5, 6, and 7 DRC1 slope (k1) | u[31:28], k1[27:24], k1[23:16], k1[15:8], k1[7:0] | **0FC0 0000** | **ratio** |
| | | Channel 1, 2, 3, 4, 5, 6, and 7 DRC1 slope (k2) | u[31:28], k2[27:24], k2[23:16], k2[15:8], k2[7:0] | **0F90 0000** | **ratio** |
| 0x9B | 8 | Channel 1, 2, 3, 4, 5, 6, and 7 DRC1 offset-1 lower 32 bits (O1) | O1[31:24], O1[23:16], O1[15:8], O1[7:0] | **FF82 3098** | **dB** |
| | | Channel 1, 2, 3, 4, 5, 6, and 7 DRC1 offset-2 lower 32 bits (O2) | O2[31:24], O2[23:16], O2[15:8], O2[7:0] | **0195 B2C0** | **dB** |
| 0x9C | 16 | Channel 1, 2, 3, 4, 5, 6, and 7 DRC1 attack | u[31:28], A[27:24], A[23:16], A[15:8], A[7:0] | **0000 883F** | **mS** |
| | | Channel 1, 2, 3, 4, 5, 6, and 7 DRC1 (1 – attack) | u[31:28], 1–A[27:24], 1–A[23:16], 1–A[15:8], 1–A[7:0] | **007F 77C0** | |
| | | Channel 1, 2, 3, 4, 5, 6, and 7 DRC1 decay | u[31:28], D[27:24], D[23:16], D[15:8], D[7:0] | **0000 0056** | **mS** |
| | | Channel 1, 2, 3, 4, 5, 6, and 7 DRC1 (1 – decay) | u[31:28], 1–D[27:24], 1–D[23:16], 1–D[15:8], 1–D[7:0] | **003F FFA8** | |

Copyright © 2012–2015, Texas Instruments Incorporated

### 7.6.2.28 DRC2 Data Registers (0x9D–0xA1)

DRC2 applies to channel 8.

**Table 46. DRC2 Data Register Format**

| I²C SUBADDRESS | TOTAL BYTES | REGISTER NAME | DESCRIPTION OF CONTENTS | DEFAULT STATE | DATA DECIMAL |
|---|---|---|---|---|---|
| 0x9D | 8 | Channel 8 DRC2 energy | u[31:28], E[27:24], E[23:16], E[15:8], E[7:0] | **0000 883F** | **mS** |
| | | Channel 8 DRC2 (1 – energy) | u[31:28], 1–E[27:24], 1–E[23:16], 1–E[15:8], 1–E[7:0] | **007F 77C0** | |
| 0x9E | 8 | Channel 8 DRC2 threshold lower 32 bits (T1) | T1[31:24], T1[23:16], T1[15:8], T1[7:0] | **0B20 E2B2** | **dB** |
| | | Channel 8 DRC2 threshold lower 32 bits (T2) | T2[31:24], T2[23:16], T2[15:8], T2[7:0] | **06F9 DE58** | **dB** |
| 0x9F | 12 | Channel 8 DRC2 slope (k0) | u[31:28], k0[27:24], k0[23:16], k0[15:8], k0[7:0] | **0040 0000** | **ratio** |
| | | Channel 8 DRC2 slope (k1) | u[31:28], k1[27:24], k1[23:16], k1[15:8], k1[7:0] | **0FC0 0000** | **ratio** |
| | | Channel 8 DRC2 slope (k2) | u[31:28], k2[27:24], k2[23:16], k2[15:8], k2[7:0] | **0F90 0000** | **ratio** |
| 0xA0 | 8 | Channel 8 DRC2 offset 1 lower 32 bits (O1) | O1[31:24], O1[23:16], O1[15:8], O1[7:0] | **FF82 3098** | **dB** |
| | | Channel 8 DRC2 offset 2 lower 32 bits (O2) | O2[31:24], O2[23:16], O2[15:8], O2[7:0] | **0195 B2C0** | **dB** |
| 0xA1 | 16 | Channel 8 DRC2 attack | u[31:28], A[27:24], A[23:16], A[15:8], A[7:0] | **0000 883F** | **mS** |
| | | Channel 8 DRC2 (1 – attack) | u[31:28], 1–A[27:24], 1–A[23:16], 1–A[15:8], 1–A[7:0] | **007F 77C0** | |
| | | Channel 8 DRC2 decay | u[31:28], D[27:24], D[23:16], D[15:8], D[7:0] | **0000 0056** | **mS** |
| | | Channel 8 DRC2 (1 – decay) | u[31:28], 1–D[27:24], 1–D[23:16], 1–D[15:8], 1–D[7:0] | **003F FFA8** | |

### 7.6.2.29 DRC Bypass Registers (0xA2–0xA9)

DRC bypass/inline for channels 1, 2, 3, 4, 5, 6, 7, and 8 are mapped into registers 0xA2, 0xA3, 0xA4, 0xA5, 0xA6, 0xA7, 0xA8, and 0xA9, respectively. Eight bytes are written for each channel. Each gain coefficient is in 28-bit (5.23) format, so 0x0080 0000 is a gain of 1. Each gain coefficient is written as a 32-bit word with the upper 4 bits not used.

To enable DRC for a given channel (with unity gain), bypass = 0x0000 0000 and inline = 0x0080 0000.

To disable DRC for a given channel, bypass = 0x0080 0000 and inline = 0x0000 0000.

**Table 47. DRC Bypass Register Format**

| REGISTER NAME | TOTAL BYTES | CONTENTS | DEFAULT VALUE |
|---|---|---|---|
| Channel bass DRC bypass | 8 | u[31:28], bypass[27:24], bypass[23:16], bypass[15:8], bypass[7:0] | **0x00, 0x80, 0x00, 0x00** |
| Channel DRC inline | | u[31:28], inline[27:24], inline[23:16], inline[15:8], inline[7:0] | **0x00, 0x00, 0x00, 0x00** |

### 7.6.2.30 Output Select and Mix Registers 8x2 (0x–0xAF)

The pass-through output mixer setting is:

- DAP channel 1 is mapped though the 8×2 crossbar mixer (0xAA) to PWM channel 1
- DAP channel 2 is mapped though the 8×2 crossbar mixer (0xAB) to PWM channel 2
- DAP channel 3 is mapped though the 8×2 crossbar mixer (0xAC) to PWM channel 3
- DAP channel 4 is mapped though the 8×2 crossbar mixer (0xAD) to PWM channel 4
- DAP channel 5 is mapped though the 8×2 crossbar mixer (0xAE) to PWM channel 5
- DAP channel 6 is mapped though the 8×2 crossbar mixer (0xAF) to PWM channel 6


Copyright © 2012–2015, Texas Instruments Incorporated

Note that the pass-through output mixer configuration (0xD0 bit 30 = 1) is recommended. Using the remapped output mixer configuration (0xD0 bit 30 = 0) increases the complexity of using some features such as volume and mute.

Total data per register is 8 bytes. The default gain for each selected channel is 1 (00 80 00 00) and 0.5 value is (00 40 00 00) value. The format is 5.23

**Table 48. Output Mixer Register Format (Upper 4 Bytes)**

| D63 | D62 | D61 | D60 | D59 | D58 | D57 | D56 | FUNCTION |
|---|---|---|---|---|---|---|---|---|
| 0 | 0 | 0 | 0 | | | | | Select channel 1 to output mixer |
| 0 | 0 | 0 | 1 | | | | | Select channel 2 to output mixer |
| 0 | 0 | 1 | 0 | | | | | Select channel 3 to output mixer |
| 0 | 0 | 1 | 1 | | | | | Select channel 4 to output mixer |
| 0 | 1 | 0 | 0 | | | | | Select channel 5 to output mixer |
| 0 | 1 | 0 | 1 | | | | | Select channel 6 to output mixer |
| 0 | 1 | 1 | 0 | | | | | Select channel 7 to output mixer |
| 0 | 1 | 1 | 1 | | | | | Select channel 8 to output mixer |
| | | | | G27 | G26 | G25 | G24 | Selected channel gain (upper 4 bits) |
| **D55** | **D54** | **D53** | **D52** | **D51** | **D50** | **D49** | **D48** | **FUNCTION** |
| G23 | G22 | G21 | G20 | G19 | G18 | G17 | G16 | Selected channel gain (continued) |
| **D47** | **D46** | **D45** | **D44** | **D43** | **D42** | **D41** | **D40** | **FUNCTION** |
| G15 | G14 | G13 | G12 | G11 | G10 | G9 | G8 | Selected channel gain (continued) |
| **D39** | **D38** | **D37** | **D36** | **D35** | **D34** | **D33** | **D32** | **FUNCTION** |
| G7 | G6 | G5 | G4 | G3 | G2 | G1 | G0 | Selected channel gain (lower 8 bits) |

**Table 49. Output Mixer Register Format (Lower 4 Bytes)**

| D31 | D30 | D29 | D28 | D27 | D26 | D25 | D24 | FUNCTION |
|---|---|---|---|---|---|---|---|---|
| 0 | 0 | 0 | 0 | | | | | Select channel 1 to output mixer |
| 0 | 0 | 0 | 1 | | | | | Select channel 2 to output mixer |
| 0 | 0 | 1 | 0 | | | | | Select channel 3 to output mixer |
| 0 | 0 | 1 | 1 | | | | | Select channel 4 to output mixer |
| 0 | 1 | 0 | 0 | | | | | Select channel 5 to output mixer |
| 0 | 1 | 0 | 1 | | | | | Select channel 6 to output mixer |
| 0 | 1 | 1 | 0 | | | | | Select channel 7 to output mixer |
| 0 | 1 | 1 | 1 | | | | | Select channel 8 to output mixer |
| | | | | G27 | G26 | G25 | G24 | Selected channel gain (upper 4 bits) |
| **D23** | **D22** | **D21** | **D20** | **D19** | **D18** | **D17** | **D16** | **FUNCTION** |
| G23 | G22 | G21 | G20 | G19 | G18 | G17 | G16 | Selected channel gain (continued) |
| **D15** | **D14** | **D13** | **D12** | **D11** | **D10** | **D9** | **D8** | **FUNCTION** |
| G15 | G14 | G13 | G12 | G11 | G10 | G9 | G8 | Selected channel gain (continued) |
| **D7** | **D6** | **D5** | **D4** | **D3** | **D2** | **D1** | **D0** | **FUNCTION** |
| G7 | G6 | G5 | G4 | G3 | G2 | G1 | G0 | Selected channel gain (lower 8 bits) |

Copyright © 2012–2015, Texas Instruments Incorporated

#### *7.6.2.31 8×3 Output Mixer Registers (0xB0–0xB1)*

The pass-through output mixer setting is:

- DAP channel 7 is mapped though the 8×3 crossbar mixer (0xB0) to PWM channel 7
- DAP channel 8 is mapped though the 8×3 crossbar mixer (0xB1) to PWM channel 8

The default gain is 1 (00 80 00 00), 0.5 value is (00 40 00 00). Format is 5.23

Total data per register is 12 bytes. The default gain for each selected channel is 1 (0x0080 0000).

**Table 50. Output Mixer Register Format (Upper 4 Bytes)**

| D95 | D94 | D93 | D92 | D91 | D90 | D89 | D88 | FUNCTION |
|---|---|---|---|---|---|---|---|---|
| 0 | 0 | 0 | 0 | | | | | Select channel 1 to output mixer |
| 0 | 0 | 0 | 1 | | | | | Select channel 2 to output mixer |
| 0 | 0 | 1 | 0 | | | | | Select channel 3 to output mixer |
| 0 | 0 | 1 | 1 | | | | | Select channel 4 to output mixer |
| 0 | 1 | 0 | 0 | | | | | Select channel 5 to output mixer |
| 0 | 1 | 0 | 1 | | | | | Select channel 6 to output mixer |
| 0 | 1 | 1 | 0 | | | | | Select channel 7 to output mixer |
| 0 | 1 | 1 | 1 | | | | | Select channel 8 to output mixer |
| | | | | G27 | G26 | G25 | G24 | Selected channel gain (upper 4 bits) |
| **D87** | **D86** | **D85** | **D84** | **D83** | **D82** | **D81** | **D80** | **FUNCTION** |
| G23 | G22 | G21 | G20 | G19 | G18 | G17 | G16 | Selected channel gain (continued) |
| **D79** | **D78** | **D77** | **D76** | **D75** | **D74** | **D73** | **D72** | **FUNCTION** |
| G15 | G14 | G13 | G12 | G11 | G10 | G9 | G8 | Selected channel gain (continued) |
| **D71** | **D70** | **D69** | **D68** | **D67** | **D66** | **D65** | **D64** | **FUNCTION** |
| G7 | G6 | G5 | G4 | G3 | G2 | G1 | G0 | Selected channel gain (lower 8 bits) |


Copyright © 2012–2015, Texas Instruments Incorporated

### Table 51. Output Mixer Register Format (Middle 4 Bytes)

| D63 | D62 | D61 | D60 | D59 | D58 | D57 | D56 | FUNCTION |
|---|---|---|---|---|---|---|---|---|
| 0 | 0 | 0 | 0 | | | | | Select channel 1 to output mixer |
| 0 | 0 | 0 | 1 | | | | | Select channel 2 to output mixer |
| 0 | 0 | 1 | 0 | | | | | Select channel 3 to output mixer |
| 0 | 0 | 1 | 1 | | | | | Select channel 4 to output mixer |
| 0 | 1 | 0 | 0 | | | | | Select channel 5 to output mixer |
| 0 | 1 | 0 | 1 | | | | | Select channel 6 to output mixer |
| 0 | 1 | 1 | 0 | | | | | Select channel 7 to output mixer |
| 0 | 1 | 1 | 1 | | | | | Select channel 8 to output mixer |
| | | | | G27 | G26 | G25 | G24 | Selected channel gain (upper 4 bits) |
| **D55** | **D54** | **D53** | **D52** | **D51** | **D50** | **D49** | **D48** | **FUNCTION** |
| G23 | G22 | G21 | G20 | G19 | G18 | G17 | G16 | Selected channel gain (continued) |
| **D47** | **D46** | **D45** | **D44** | **D43** | **D42** | **D41** | **D40** | **FUNCTION** |
| G15 | G14 | G13 | G12 | G11 | G10 | G9 | G8 | Selected channel gain (continued) |
| **D39** | **D38** | **D37** | **D36** | **D35** | **D34** | **D33** | **D32** | **FUNCTION** |
| G7 | G6 | G5 | G4 | G3 | G2 | G1 | G0 | Selected channel gain (lower 8 bits) |

### Table 52. Output Mixer Register Format (Lower 4 Bytes)

| D31 | D30 | D29 | D28 | D27 | D26 | D25 | D24 | FUNCTION |
|---|---|---|---|---|---|---|---|---|
| 0 | 0 | 0 | 0 | | | | | Select channel 1 to output mixer |
| 0 | 0 | 0 | 1 | | | | | Select channel 2 to output mixer |
| 0 | 0 | 1 | 0 | | | | | Select channel 3 to output mixer |
| 0 | 0 | 1 | 1 | | | | | Select channel 4 to output mixer |
| 0 | 1 | 0 | 0 | | | | | Select channel 5 to output mixer |
| 0 | 1 | 0 | 1 | | | | | Select channel 6 to output mixer |
| 0 | 1 | 1 | 0 | | | | | Select channel 7 to output mixer |
| 0 | 1 | 1 | 1 | | | | | Select channel 8 to output mixer |
| | | | | G27 | G26 | G25 | G24 | Selected channel gain (upper 4 bits) |
| **D23** | **D22** | **D21** | **D20** | **D19** | **D18** | **D17** | **D16** | **FUNCTION** |
| G23 | G22 | G21 | G20 | G19 | G18 | G17 | G16 | Selected channel gain (continued) |
| **D15** | **D14** | **D13** | **D12** | **D11** | **D10** | **D9** | **D8** | **FUNCTION** |
| G15 | G14 | G13 | G12 | G11 | G10 | G9 | G8 | Selected channel gain (continued) |
| **D7** | **D6** | **D5** | **D4** | **D3** | **D2** | **D1** | **D0** | **FUNCTION** |
| G7 | G6 | G5 | G4 | G3 | G2 | G1 | G0 | Selected channel gain (lower 8 bits) |

Copyright © 2012–2015, Texas Instruments Incorporated

### 7.6.2.32 ASRC Registers (0xC3-C5)

**Table 53. ASRC Status 0xC3 (Read Only)**

| D31 | D30 | D29 | D28 | D27 | D26 | D25 | D24 | FUNCTION |
|---|---|---|---|---|---|---|---|---|
| | | | 0 | | | | | ASRC #1 is down sampling |
| | | | 1 | | | | | ASRC #1 is up sampling |
| | | | | | | | 0 | ASRC #2 is down sampling |
| | | | | | | | 1 | ASRC #2 is up sampling |
| **D23** | **D22** | **D21** | **D20** | **D19** | **D18** | **D17** | **D16** | **FUNCTION** |
| | 0 | | | | | | | ASRC #1 clocks are valid |
| | 1 | | | | | | | Error in ASRC #1 clocks |
| | | | 0 | | | | | ASRC #2 clocks are valid |
| | | | 1 | | | | | Error in ASRC #2 clocks |
| | | | | | 0 | | | ASRC #1 is unlocked |
| | | | | | 1 | | | ASRC #1 is locked |
| | | | | | | | 0 | ASRC #2 is unlocked |
| | | | | | | | 1 | ASRC #1 is locked |
| **D15** | **D14** | **D13** | **D12** | **D11** | **D10** | **D9** | **D8** | **FUNCTION** |
| | | | 0 | | | | | ASRC #1 is unmuted |
| | | | 1 | | | | | ASRC #1 is muted |
| | | | | | | | 0 | ASRC #2 is unmuted |
| | | | | | | | 1 | ASRC #2 is muted |
| **D7** | **D6** | **D5** | **D4** | **D3** | **D2** | **D1** | **D0** | **FUNCTION** |
| | | | 0 | | | | | **RESERVED** |
| | | | 1 | | | | | **RESERVED** |
| | | | | | | | 0 | **RESERVED** |
| | | | | | | | 1 | **RESERVED** |

**Table 54. ASRC Control (0xC4)**

| D31 | D30 | D29 | D28 | D27 | D26 | D25 | D24 | FUNCTION |
|---|---|---|---|---|---|---|---|---|
| | | | **0** | | | | | **ASRCs in independent mode (clock error on one will not affect the other)** |
| | | | 1 | | | | | ASRCs in coupled mode (clock error on one will trigger muting of both ASRCs) |
| | | | | | | | **0** | **ASRC2 uses LRCK and SCK** |
| | | | | | | | 1 | ASRC2 uses LRCK2 and SCK2 |
| **D23** | **D22** | **D21** | **D20** | **D19** | **D18** | **D17** | **D16** | **FUNCTION** |
| | **0** | | | | | | | **Normal (32-sample) FIFO latency for ASRC1** |
| | 1 | | | | | | | Low (16-sample) FIFO latency for ASRC1 |
| | | | **0** | | | | | **Normal (32-sample) FIFO latency for ASRC2** |
| | | | 1 | | | | | Low (16-sample) FIFO latency for ASRC2 |
| | | | | | **0** | | | **Do not dither ASRC output** |
| | | | | | 1 | | | Dither ASRC output before truncation back to 24-bit |
| | | | | | | | 0 | ASRC unlock will not cause ASRC clock error |
| | | | | | | | **1** | **ASRC unlock will cause ASRC clock error** |
| **D15** | **D14** | **D13** | **D12** | **D11** | **D10** | **D9** | **D8** | **FUNCTION** |
| | **0** | | | | | | | **ASRC1 is enabled** |
| | 1 | | | | | | | ASRC1 is bypassed |
| | | | **0** | | | | | **ASRC2 is enabled** |


Copyright © 2012–2015, Texas Instruments Incorporated

**Table 54. ASRC Control (0xC4) (continued)**

| | | | | | | | | |
|---|---|---|---|---|---|---|---|---|
| | | | 1 | | | | | ASRC2 is bypassed |
| | | | | | **0** | | | **RESERVED** |
| | | | | | 1 | | | RESERVED |
| | | | | | | | **0** | **RESERVED** |
| | | | | | | | 1 | RESERVED |
| **D7** | **D6** | **D5** | **D4** | **D3** | **D2** | **D1** | **D0** | **FUNCTION** |
| 0 | 0 | 0 | 0 | | | | | ASRC #1 Right Justified 16bit |
| 0 | 0 | 0 | 1 | | | | | ASRC #1 Right Justified 20bit |
| 0 | 0 | 1 | 0 | | | | | ASRC #1 Right Justified 24bit |
| 0 | 0 | 1 | 1 | | | | | ASRC #1 I2S 16bit |
| 0 | 1 | 0 | 0 | | | | | ASRC #1 I2S 20bit |
| **0** | **1** | **0** | **1** | | | | | **ASRC #1 I2S 24bit** |
| 0 | 1 | 1 | 0 | | | | | ASRC #1 Left Justified 16bit |
| 0 | 1 | 1 | 1 | | | | | ASRC #1 Left Justified 20bit |
| 1 | 0 | 0 | 0 | | | | | ASRC #1 Left Justified 24bit |
| | | | | 0 | 0 | 0 | 0 | ASRC #2 Right Justified 16bit |
| | | | | 0 | 0 | 0 | 1 | ASRC #2 Right Justified 20bit |
| | | | | 0 | 0 | 1 | 0 | ASRC #2 Right Justified 24bit |
| | | | | 0 | 0 | 1 | 1 | ASRC #2 I2S 16bit |
| | | | | 0 | 1 | 0 | 0 | ASRC #2 I2S 20bit |
| | | | | **0** | **1** | **0** | **1** | **ASRC #2 I2S 24bit** |
| | | | | 0 | 1 | 1 | 0 | ASRC #2 Left Justified 16bit |
| | | | | 0 | 1 | 1 | 1 | ASRC #2 Left Justified 20bit |
| | | | | 1 | 0 | 0 | 0 | ASRC #2 Left Justified 24bit |

Bit D28: Having ASRC's act independently allows two sources, such as S/PDIF receiver and a bluetooth module to be mixed comfortably, without issue if one of the sources fails/stops. Usage example: mixing audio from games console with bluetooth audio input. If bluetooth connection is dropped, the audio from console will not mute.

Bit D18: Select truncation of the data on the output of the SRC, with or without applied Dither. This is based on user preference. TI suggests dithering before truncation.

**Table 55. ASRC Mode Control 0xC5**

| D31 | D30 | D29 | D28 | D27 | D26 | D25 | D24 | FUNCTION |
|---|---|---|---|---|---|---|---|---|
| | | | | | **0** | | | **Disable MCLKO (PSVC output is available, Default)** |
| | | | | | 1 | | | Enable MCLKO (PSVC output is not available) |
| | | | | | | **0** | | **Disable SCLKO (SCLK2 input is available, Default)** |
| | | | | | | 1 | | Enable SCLKO (SCLK2 input is not available) |
| | | | | | | | **0** | **Disable LRCLKO (LRCLK2 input is available, Default)** |
| | | | | | | | 1 | Enable LRCLKO (LRCLK2 input is not available) |
| **D23** | **D22** | **D21** | **D20** | **D19** | **D18** | **D17** | **D16** | **FUNCTION** |
| | | | **0** | | | | | **Serial clock output sampling rate is 44.1/48 kHz** |
| | | | 1 | | | | | Serial clock output sampling rate is the internal sampling rate |
| | | | | | | | 0 | Disable SDIN5 (SDOUT is available) |
| | | | | | | | **1** | **Enable SDIN5 (SDOUT is not available)** |
| **D15** | **D14** | **D13** | **D12** | **D11** | **D10** | **D9** | **D8** | **FUNCTION** |
| | | | | | | **0** | **0** | Serial output muted |
| | | | | | | 0 | 1 | Select ASRC channel 1+2 (from SDIN1) outputs for serial out |

**Table 55. ASRC Mode Control 0xC5 (continued)**

| D31 | D30 | D29 | D28 | D27 | D26 | D25 | D24 | FUNCTION |
|---|---|---|---|---|---|---|---|---|
| | | | | | | 1 | 0 | Select ASRC channel 3+4 (from SDIN2) outputs for serial out |
| | | | | | | 1 | 1 | Select DAP output for serial out |
| **D7** | **D6** | **D5** | **D4** | **D3** | **D2** | **D1** | **D0** | **FUNCTION** |
| | | **0** | **0** | | | | | MDIV0/1 -Division factor for MCLKO<br>Division factor for MCLKO<br>**00 :Divide by 1 (Default)**<br>01 : Divide by 2<br>10 : Divide by 4<br>11 : Divide by 8 |
| | | 0 | 1 | | | | | |
| | | 1 | 0 | | | | | |
| | | 1 | 1 | | | | | |
| | | | | | | **0** | **0** | Sampling Rate<br>**00 : 88.2/96 kHz (Default**)<br>01 : 176.4/192 kHz<br>1x : 44.1/48 kHz |
| | | | | | | 0 | 1 | |
| | | | | | | 1 | 0 | |
| | | | | | | 1 | 1 | |

For 192kHz Native 4ch process flow, ALWAYS set D20 to 1, to ensure correct data output.

### *7.6.2.33 Auto Mute Behavior (0xCC)*

**Table 56. Auto Mute Behavior**

| D31 | D30 | D29 | D28 | D27 | D26 | D25 | D24 | FUNCTION |
|---|---|---|---|---|---|---|---|---|
| | | | | | | | | Reserved |
| **D23** | **D22** | **D21** | **D20** | **D19** | **D18** | **D17** | **D16** | **FUNCTION** |
| | | | | | | | | Reserved |
| **D15** | **D14** | **D13** | **D12** | **D11** | **D10** | **D9** | **D8** | **FUNCTION** |
| | | | | | | | **0** | Disable noise shaper on auto mute |
| | | | | | | | 1 | Do not disable noise shaper on auto mute |
| **D7** | **D6** | **D5** | **D4** | **D3** | **D2** | **D1** | **D0** | **FUNCTION** |
| | | | | | | | **0** | Do not stop PWM on auto mute (Stay at duty 50:50) |
| | | | | | | | 1 | Stop PWM on auto mute |


Copyright © 2012–2015, Texas Instruments Incorporated

#### 7.6.2.34 PSVC Volume Biquad Register (0xCF)

Each gain coefficient is in 28-bit (5.23) format, so 0x80 0000 is a gain of 1. Each gain coefficient is written as a 32-bit word with the upper four bits not used. Note that this register should be used only with the PSVC feature its use is not required. For systems not using this feature, it is recommended that this biquad be set to all-pass (default).

**Table 57. Volume Biquad Register Format (Default = All-Pass)**

| DESCRIPTION | REGISTER FIELD CONTENTS | DEFAULT GAIN COEFFICIENT VALUES | |
|---|---|---|---|
| | | DECIMAL | HEX |
| $b_0$ coefficient | u[31:28], b0[27:24], b0[23:16], b0[15:8], b0[7:0] | **1.0** | **0080 0000** |
| $b_1$ coefficient | u[31:28], b1[27:24], b1[23:16], b1[15:8], b1[7:0] | **0.0** | **0000 0000** |
| $b_2$ coefficient | u[31:28], b2[27:24], b2[23:16], b2[15:8], b2[7:0] | **0.0** | **0000 0000** |
| $a_1$ coefficient | u[31:28], a1[27:24], a1[23:16], a1[15:8], a1[7:0] | **0.0** | **0000 0000** |
| $a_2$ coefficient | u[31:28], a2[27:24], a2[23:16], a2[15:8], a2[7:0] | **0.0** | **0000 0000** |

#### 7.6.2.35 Volume, Treble, and Bass Slew Rates Register (0xD0)

**Volume Gain Update Rate (Slew Rate)**

| D31 | D30 | D29–D11 | D10 | D9 | D8 | FUNCTION |
|---|---|---|---|---|---|---|
| - | - | - | 0 | 0 | 0 | 512 step update at 4 Fs, 21.3 ms at 96 kHz |
| - | - | - | 0 | 0 | **1** | **1024 step update at 4 Fs, 42.65 ms at 96 kHz** |
| - | - | - | 0 | 1 | 0 | 2048 step update at 4 Fs, 85 ms at 96 kHz |
| - | - | - | 0 | 1 | 1 | 2048 step update at 4 Fs, 85 ms at 96 kHz |
| - | - | - | 1 | 0 | 0 | 256 step update at 4 Fs, 10.65 ms at 96kHz |
| 1 | 0 | 0 | - | - | - | Abort volume ramp if there is a change in the volume of any channel |
| 0 | 1 | 0 | - | - | - | Enable PWM shutdown on headphone change |

**Table 58. Treble and Bass Gain Step Size (Slew Rate)**

| D7 | D6 | D5 | D4 | D3 | D2 | D1 | D0 | FUNCTION |
|---|---|---|---|---|---|---|---|---|
| 0 | 0 | 0 | 0 | 0 | 0 | 0 | 0 | No operation |
| 0 | 0 | 0 | 0 | 0 | 1 | 0 | 0 | Minimum rate – Updates every 0.083 ms (every LRCLK at 48 kHz) |
| 0 | 0 | 1 | 0 | 0 | 0 | 0 | 0 | Updates every 0.67 ms (32 LRCLKs at 48 kHz) |
| **0** | **0** | **1** | **1** | **1** | **1** | **1** | **1** | **Default rate - Updates every 1.31 ms (63 LRCLKs at 48 kHz). This is the maximum constant time that can be set for all sample rates.** |
| 1 | 1 | 1 | 1 | 1 | 1 | 1 | 1 | Maximum rate – Updates every 5.08 ms (every 255 LRCLKs at 48 kHz) |

**Note:** Once the volume command is given, no I2C commands should be issued until volume ramp has finished. The lock out time is 1.5 × slew rate or defined in 0xD0

#### 7.6.2.36 Volume Registers (0xD1–0xD9)

Channels 1, 2, 3, 4, 5, 6, 7, and 8 are mapped into registers 0xD1, 0xD2, 0xD3, 0xD4, 0xD5, 0xD6, 0xD7, and 0xD8, respectively. The default volume for all channels is 0 dB.

Master volume is mapped into register 0xD9. The default for the master volume is mute.

Bits D31–D12 are reserved. D9-D0 are the volume index, their values can be calculated from Table 60.

**Table 59. Volume Register Format**

| D31 | D30 | D29 | D28 | D27 | D26 | D25 | D24 | FUNCTION |
|---|---|---|---|---|---|---|---|---|
| RESERVED | RESERVED | RESERVED | RESERVED | RESERVED | RESERVED | RESERVED | RESERVED | RESERVED |
| **D23** | **D22** | **D21** | **D20** | **D19** | **D18** | **D17** | **D16** | **FUNCTION** |
| RESERVED | RESERVED | RESERVED | RESERVED | RESERVED | RESERVED | RESERVED | RESERVED | RESERVED |
| **D15** | **D14** | **D13** | **D12** | **D11** | **D10** | **D9** | **D8** | **FUNCTION** |
| RESERVED | RESERVED | RESERVED | RESERVED | RESERVED | RESERVED | V9 | V8 | Volume |
| **D7** | **D6** | **D5** | **D4** | **D3** | **D2** | **D1** | **D0** | **FUNCTION** |
| V7 | V6 | V5 | V4 | V3 | V2 | V1 | V0 | Volume |


Copyright © 2012–2015, Texas Instruments Incorporated

**Table 60. Master and Individual Volume Controls**

| VOLUME INDEX (H) | GAIN/INDEX(dB) |
|---|---|
| 001 | 17.75 |
| 002 | 17.5 |
| 003 | 17.25 |
| 004 | 17 |
| 005 | 16.75 |
| 006 | 16.5 |
| 007 | 16.25 |
| 008 | 16 |
| 009 | 15.75 |
| 00A | 15.5 |
| 00B | 15.25 |
| 00C | 15 |
| 00D | 14.75 |
| 00E | 14.5 |
| 00F | 14.25 |
| 010 | 14 |
| . . . | . . . |
| 044 | 1 |
| 045 | 0.75 |
| 046 | 0.5 |
| 047 | 0.25 |
| 048 | 0 |
| 049 | –0.25 |
| 04A | –0.5 |
| 04B | –0.75 |
| 04C | –1 |
| . . . | . . . |
| 240 | –126 |
| 241 | –126.25 |
| 242 | –126.5 |
| 243 | –126.75 |
| 244 | –127 |
| 245 | **Mute** |
| **TO** | |
| **3FF** | **RESERVED** |

#### 7.6.2.37 Bass Filter Set Register (0xDA)

To use the bass and treble function, the bass and treble bypass registers (0x89–0x90) must be configured as inline (default is bypass).

See Table 41 to configure the Bass Filter mode as inline or bypass.

**Table 61. Channel 8 (Subwoofer)**

| D31 | D30 | D29 | D28 | D27 | D26 | D25 | D24 | FUNCTION |
|---|---|---|---|---|---|---|---|---|
| 0 | 0 | 0 | 0 | 0 | 0 | 0 | 0 | No change |
| 0 | 0 | 0 | 0 | 0 | 0 | 0 | 1 | Bass filter set 1 |
| 0 | 0 | 0 | 0 | 0 | 0 | 1 | 0 | Bass filter set 2 |
| 0 | **0** | **0** | **0** | **0** | **0** | **1** | **1** | **Bass filter set 3** |
| 0 | 0 | 0 | 0 | 0 | 1 | 0 | 0 | Bass filter set 4 |
| 0 | 0 | 0 | 0 | 0 | 1 | 0 | 1 | Bass filter set 5 |
| 0 | 0 | 0 | 0 | 0 | 1 | 1 | 0 | Reserved |
| 0 | 0 | 0 | 0 | 0 | 1 | 1 | 1 | Reserved |

**Table 62. Channels 6 and 5 (Right and Left Lineout in 6-Channel Configuration; Right and Left Surround in 8-Channel Configuration)**

| D23 | D22 | D21 | D20 | D19 | D18 | D17 | D16 | FUNCTION |
|---|---|---|---|---|---|---|---|---|
| 0 | 0 | 0 | 0 | 0 | 0 | 0 | 0 | No change |
| 0 | 0 | 0 | 0 | 0 | 0 | 0 | 1 | Bass filter set 1 |
| 0 | 0 | 0 | 0 | 0 | 0 | 1 | 0 | Bass filter set 2 |
| **0** | **0** | **0** | **0** | **0** | **0** | **1** | **1** | **Bass filter set 3** |
| 0 | 0 | 0 | 0 | 0 | 1 | 0 | 0 | Bass filter set 4 |
| 0 | 0 | 0 | 0 | 0 | 1 | 0 | 1 | Bass filter set 5 |
| 0 | 0 | 0 | 0 | 0 | 1 | 1 | 0 | Reserved |
| 0 | 0 | 0 | 0 | 0 | 1 | 1 | 1 | Reserved |

**Table 63. Channels 4 and 3 (Right and Left Rear)**

| D15 | D14 | D13 | D12 | D11 | D10 | D9 | D8 | FUNCTION |
|---|---|---|---|---|---|---|---|---|
| 0 | 0 | 0 | 0 | 0 | 0 | 0 | 0 | No change |
| 0 | 0 | 0 | 0 | 0 | 0 | 0 | 1 | Bass filter set 1 |
| 0 | 0 | 0 | 0 | 0 | 0 | 1 | 0 | Bass filter set 2 |
| **0** | **0** | **0** | **0** | **0** | **0** | **1** | **1** | **Bass filter set 3** |
| 0 | 0 | 0 | 0 | 0 | 1 | 0 | 0 | Bass filter set 4 |
| 0 | 0 | 0 | 0 | 0 | 1 | 0 | 1 | Bass filter set 5 |
| 0 | 0 | 0 | 0 | 0 | 1 | 1 | 0 | Illegal |
| 0 | 0 | 0 | 0 | 0 | 1 | 1 | 1 | Illegal |


Copyright © 2012–2015, Texas Instruments Incorporated

**Table 64. Channels 7, 2, and 1 (Center, Right Front, and Left Front)**

| D7 | D6 | D5 | D4 | D3 | D2 | D1 | D0 | FUNCTION |
|---|---|---|---|---|---|---|---|---|
| 0 | 0 | 0 | 0 | 0 | 0 | 0 | 0 | No change |
| 0 | 0 | 0 | 0 | 0 | 0 | 0 | 1 | Bass filter set 1 |
| 0 | 0 | 0 | 0 | 0 | 0 | 1 | 0 | Bass filter set 2 |
| **0** | **0** | **0** | **0** | **0** | **0** | **1** | **1** | **Bass filter set 3** |
| 0 | 0 | 0 | 0 | 0 | 1 | 0 | 0 | Bass filter set 4 |
| 0 | 0 | 0 | 0 | 0 | 1 | 0 | 1 | Bass filter set 5 |
| 0 | 0 | 0 | 0 | 0 | 1 | 1 | 0 | Illegal |
| 0 | 0 | 0 | 0 | 0 | 1 | 1 | 1 | Illegal |

### *7.6.2.38 Bass Filter Index Register (0xDB)*

Index values above 0x24 are invalid. To use the bass and treble function, the bass and treble bypass registers (0x89–0x90) must be configured as inline (default is bypass).

**Table 65. Bass Filter Index Register Format**

| I²C SUBADDRESS | TOTAL BYTES | REGISTER NAME | DESCRIPTION OF CONTENTS | DEFAULT STATE |
|---|---|---|---|---|
| 0xDB | 4 | Bass filter index (BFI) | Ch8_BFI[31:24], Ch65_BFI[23:16], Ch43_BFI[15:8], Ch721_BFI[7:0] | **1212 1212** |

**Table 66. Bass Filter Indexes**

| BASS INDEX VALUE | ADJUSTMENT (dB) | BASS INDEX VALUE | ADJUSTMENT (dB) |
|---|---|---|---|
| 0x00 | 18 | 0x13 | –1 |
| 0x01 | 17 | 0x14 | –2 |
| 0x02 | 16 | 0x15 | –3 |
| 0x03 | 15 | 0x16 | –4 |
| 0x04 | 14 | 0x17 | –5 |
| 0x05 | 13 | 0x18 | –6 |
| 0x06 | 12 | 0x19 | –7 |
| 0x07 | 11 | 0x1A | –8 |
| 0x08 | 10 | 0x1B | –9 |
| 0x09 | 9 | 0x1C | –10 |
| 0x0A | 8 | 0x1D | –11 |
| 0x0B | 7 | 0x1E | –12 |
| 0x0C | 6 | 0x1F | –13 |
| 0x0D | 5 | 0x20 | –14 |
| 0x0E | 4 | 0x21 | –15 |
| 0x0F | 3 | 0x22 | –16 |
| 0x10 | 2 | 0x23 | –17 |
| 0x11 | 1 | 0x24 | –18 |
| **0x12** | **0** | | |

Copyright © 2012–2015, Texas Instruments Incorporated

#### 7.6.2.39 Treble Filter Set Register (0xDC)

Bits D31–D27 are reserved. To use the bass and treble function, the bass and treble bypass registers (0x89 - 0x90) must be configured as inline (enabled).

See Table 41 to configure the Treble Filter mode as inline or bypass.

**Table 67. Channel 8 (Subwoofer)**

| D31 | D30 | D29 | D28 | D27 | D26 | D25 | D24 | FUNCTION |
|---|---|---|---|---|---|---|---|---|
| 0 | 0 | 0 | 0 | 0 | 0 | 0 | 0 | No change |
| 0 | 0 | 0 | 0 | 0 | 0 | 0 | 1 | Treble filter set 1 |
| 0 | 0 | 0 | 0 | 0 | 0 | 1 | 0 | Treble filter set 2 |
| **0** | **0** | **0** | **0** | **0** | **0** | **1** | **1** | **Treble filter set 3** |
| 0 | 0 | 0 | 0 | 0 | 1 | 0 | 0 | Treble filter set 4 |
| 0 | 0 | 0 | 0 | 0 | 1 | 0 | 1 | Treble filter set 5 |
| 0 | 0 | 0 | 0 | 0 | 1 | 1 | 0 | Illegal |
| 0 | 0 | 0 | 0 | 0 | 1 | 1 | 1 | Illegal |

Bits D23–D19 are reserved.

**Table 68. Channels 6 and 5 (Right and Left Lineout in 6-Channel Configuration; Right and Left Surround in 8-Channel Configuration)**

| D23 | D22 | D21 | D20 | D19 | D18 | D17 | D16 | FUNCTION |
|---|---|---|---|---|---|---|---|---|
| 0 | 0 | 0 | 0 | 0 | 0 | 0 | 0 | No change |
| 0 | 0 | 0 | 0 | 0 | 0 | 0 | 1 | Treble filter set 1 |
| 0 | 0 | 0 | 0 | 0 | 0 | 1 | 0 | Treble filter set 2 |
| **0** | **0** | **0** | **0** | **0** | **0** | **1** | **1** | **Treble filter set 3** |
| 0 | 0 | 0 | 0 | 0 | 1 | 0 | 0 | Treble filter set 4 |
| 0 | 0 | 0 | 0 | 0 | 1 | 0 | 1 | Treble filter set 5 |
| 0 | 0 | 0 | 0 | 0 | 1 | 1 | 0 | Illegal |
| 0 | 0 | 0 | 0 | 0 | 1 | 1 | 1 | Illegal |

Bits D15–D11 are reserved.

**Table 69. Channels 4 and 3 (Right and Left Rear)**

| D15 | D14 | D13 | D12 | D11 | D10 | D9 | D8 | FUNCTION |
|---|---|---|---|---|---|---|---|---|
| 0 | 0 | 0 | 0 | 0 | 0 | 0 | 0 | No change |
| 0 | 0 | 0 | 0 | 0 | 0 | 0 | 1 | Treble filter set 1 |
| 0 | 0 | 0 | 0 | 0 | 0 | 1 | 0 | Treble filter set 2 |
| **0** | **0** | **0** | **0** | **0** | **0** | **1** | **1** | **Treble filter set 3** |
| 0 | 0 | 0 | 0 | 0 | 1 | 0 | 0 | Treble filter set 4 |
| 0 | 0 | 0 | 0 | 0 | 1 | 0 | 1 | Treble filter set 5 |
| 0 | 0 | 0 | 0 | 0 | 1 | 1 | 0 | Illegal |
| 0 | 0 | 0 | 0 | 0 | 1 | 1 | 1 | Illegal |


Copyright © 2012–2015, Texas Instruments Incorporated

Bits D7–D3 are reserved.

**Table 70. Channels 7, 2, and 1 (Center, Right Front, and Left Front)**

| D7 | D6 | D5 | D4 | D3 | D2 | D1 | D0 | FUNCTION |
|---|---|---|---|---|---|---|---|---|
| 0 | 0 | 0 | 0 | 0 | 0 | 0 | 0 | No change |
| 0 | 0 | 0 | 0 | 0 | 0 | 0 | 1 | Treble filter set 1 |
| 0 | 0 | 0 | 0 | 0 | 0 | 1 | 0 | Treble filter set 2 |
| **0** | **0** | **0** | **0** | **0** | **0** | **1** | **1** | **Treble filter set 3** |
| 0 | 0 | 0 | 0 | 0 | 1 | 0 | 0 | Treble filter set 4 |
| 0 | 0 | 0 | 0 | 0 | 1 | 0 | 1 | Treble filter set 5 |
| 0 | 0 | 0 | 0 | 0 | 1 | 1 | 0 | Illegal |
| 0 | 0 | 0 | 0 | 0 | 1 | 1 | 1 | Illegal |

### *7.6.2.40 Treble Filter Index (0xDD)*

Index values above 0x24 are invalid. To use the bass and treble function, the bass and treble bypass registers (0x89 - 0x90) must be configured as inline (enabled).

**Table 71. Treble Filter Index Register Format**

| $I^2C$ SUBADDRESS | TOTAL BYTES | REGISTER NAME | DESCRIPTION OF CONTENTS | DEFAULT STATE |
|---|---|---|---|---|
| 0xDD | 4 | Treble filter index (TFI) | Ch8_TFI[31:24], Ch65_TFI[23:16], Ch43_TFI[15:8], Ch721_TFI[7:0] | **1212 1212** |

**Table 72. Treble Filter Indexes**

| TREBLE INDEX VALUE | ADJUSTMENT (dB) | TREBLE INDEX VALUE | ADJUSTMENT (dB) |
|---|---|---|---|
| 0x00 | 18 | 0x13 | –1 |
| 0x01 | 17 | 0x14 | –2 |
| 0x02 | 16 | 0x15 | –3 |
| 0x03 | 15 | 0x16 | –4 |
| 0x04 | 14 | 0x17 | –5 |
| 0x05 | 13 | 0x18 | –6 |
| 0x\06 | 12 | 0x19 | –7 |
| 0x07 | 11 | 0x1A | –8 |
| 0x08 | 10 | 0x1B | –9 |
| 0x09 | 9 | 0x1C | –10 |
| 0x0A | 8 | 0x1D | –11 |
| 0x0B | 7 | 0x1E | –12 |
| 0x0C | 6 | 0x1F | –13 |
| 0x0D | 5 | 0x20 | –14 |
| 0x0E | 4 | 0x21 | –15 |
| 0x0F | 3 | 0x22 | –16 |
| 0x10 | 2 | 0x23 | –17 |
| 0x11 | 1 | 0x24 | –18 |
| **0x12** | **0** | | |

#### *7.6.2.41 AM Mode Register (0xDE)*

Bits D31–D25 and D23-D21 are reserved.

BCD = Binary Coded Decimal.

**Table 73. AM Mode Register Format**

| D31 | D30 | D29 | D28 | D27 | D26 | D25 | D24 | FUNCTION |
|---|---|---|---|---|---|---|---|---|
| | | | | | | | **0** | **AM Avoidance Mode: Use Frequency Scaling** |
| | | | | | | | 1 | AM Avoidance Mode: Use Sampling Rate Conversion Mode |
| **D23** | **D22** | **D21** | **D20** | **D19** | **D18** | **D17** | **D16** | **FUNCTION** |
| | | | **0** | – | – | – | – | **AM mode disabled** |
| | | | 1 | – | – | – | – | AM mode enabled |
| | | | – | **0** | **0** | – | – | **Select sequence 1** |
| | | | – | 0 | 1 | – | – | Select sequence 2 |
| | | | – | 1 | 0 | – | – | Select sequence 3 |
| | | | – | 1 | 1 | – | – | Select sequence 4 |
| | | | – | – | – | **0** | – | **IF frequency = 455 kHz** |
| | | | – | – | – | 1 | – | IF frequency = 262.5 kHz |
| | | | – | – | – | – | **0** | **Use BCD-tuned frequency** |
| | | | – | – | – | – | 1 | Use binary-tuned frequency |

**Table 74. AM Tuned Frequency Register in BCD Mode (Lower 2 Bytes of 0xDE)**

| D15 | D14 | D13 | D12 | D11 | D10 | D9 | D8 | FUNCTION |
|---|---|---|---|---|---|---|---|---|
| 0 | 0 | 0 | B0 | – | – | – | – | BCD frequency (1000s kHz) |
| – | – | – | – | B3 | B2 | B1 | B0 | BCD frequency (100s kHz) |
| **0** | **0** | **0** | **0** | **0** | **0** | **0** | **0** | **Default value** |
| **D7** | **D6** | **D5** | **D4** | **D3** | **D2** | **D1** | **D0** | **FUNCTION** |
| B3 | B2 | B1 | B0 | – | – | – | – | BCD frequency (10s kHz) |
| – | – | – | – | B3 | B2 | B1 | B0 | BCD frequency (1s kHz) |
| **0** | **0** | **0** | **0** | **0** | **0** | **0** | **0** | **Default value** |

**Table 75. AM Tuned Frequency Register in Binary Mode (Lower 2 Bytes of 0xDE)**

| D15 | D14 | D13 | D12 | D11 | D10 | D9 | D8 | FUNCTION |
|---|---|---|---|---|---|---|---|---|
| 0 | 0 | 0 | 0 | 0 | B10 | B9 | B8 | Binary frequency (upper 3 bits) |
| **0** | **0** | **0** | **0** | **0** | **0** | **0** | **0** | **Default value** |
| **D7** | **D6** | **D5** | **D4** | **D3** | **D2** | **D1** | **D0** | **FUNCTION** |
| B7 | B6 | B5 | B4 | B3 | B2 | B1 | B0 | Binary frequency (lower 8 bits) |
| 0 | 0 | 0 | 0 | 0 | 0 | 0 | 0 | Default value |


Copyright © 2012–2015, Texas Instruments Incorporated

#### 7.6.2.42 PSVC Range Register (0xDF)

Bits D31–D2 are zero.

**Table 76. PSVC Range Register Format**

| D31–D2 | D1 | D0 | FUNCTION |
|---|---|---|---|
| 0 | 0 | 0 | 12.04-dB control range for PSVC |
| 0 | 0 | 1 | 18.06-dB control range for PSVC |
| **0** | **1** | **0** | **24.08-dB control range for PSVC** |
| 0 | 1 | 1 | Ignore – retain last value |

#### 7.6.2.43 General Control Register (0xE0)

Bits D31–D4 are zero. Bit D0 is reserved.

**Table 77. General Control Register Format**

| D31–D4 | D3 | D2 | D1 | D0 | FUNCTION |
|---|---|---|---|---|---|
| | – | – | **0** | – | **Normal** |
| | – | – | 1 | - | Lineout/6 Channel mode (6Channels will be pwm processed) |
| **0** | | **0** | – | – | **Power Supply Volume Control Disable** |
| 0 | | 1 | – | – | Power Supply Volume Control Enable |
| **0** | **0** | – | – | – | **Subwoofer Part of PSVC** |
| 0 | 1 | – | – | – | Subwoofer Separate from PSVC |

#### 7.6.2.44 96kHz Dolby Downmix Coefficients (0xE3 to 0xE8)

Each gain coefficient is in 28-bit (5.23) format, so 0x80 0000 is a gain of 1. Each gain coefficient is written as a 32-bit word with the upper four bits not used. For eight gain coefficients, the total is 32 bytes.

**Table 78. 96kHz Dolby Downmix Coefficients**

| $I^2C$ SUBADDRESS | TOTAL BYTES | REGISTER Fields | DESCRIPTION OF CONTENTS | DEFAULT STATE |
|---|---|---|---|---|
| 0xE3 | 4 | dolby_COEF1L_96k | 96kHz SDIN1-left to SDOUT-left down-mix coefficient (default = 1/3.121) . This is also the coefficient for SDIN1-right to SDOUT-right. | 00 29 03 33 |
| 0xE4 | 4 | dolby_COEF1R_96k | 96kHz SDIN4-left to SDOUT-left down-mix coefficient. This is also the coefficient for SDIN4-left to SDOUT-right. | 00 1C FE EF |
| 0xE5 | 4 | TBD | 96kHz SDIN2-left to SDOUT-right down-mix coefficient. | FF E3 01 11 |
| 0xE6 | 4 | TBD | 96kHz SDIN2-right to SDOUT-right down-mix coefficient. | FF E3 01 11 |
| 0xE7 | 4 | TBD | 96kHz SDIN2-left to SDOUT-left down-mix coefficient. | FF E3 01 11 |
| 0xE8 | 4 | TBD | 96kHz SDIN2-right to SDOUT-left down-mix coefficient. | FF E3 01 11 |

#### 7.6.2.45 THD Manager Configuration (0xE9 and 0xEA)

0xE9 (4B) THD Manager (pre) - provide boost if desired to clip

0xEA (4B) THD Manager (post) - cut clipping signal to final level

Both registers have a 5.23 register format (28bit coefficient)

Valid register values 0000 0000 to 0FFF FFFF

Writes to upper byte is ignored

0dB default value 0080 0000

max positive value 07 FF FFFF = +24dB

negative values 08xx xxxx will invert the signal amplitude

**Table 79. THD Manager Configuration**

| I²C SUBADDRESS | TOTAL BYTES | REGISTER Fields | DESCRIPTION OF CONTENTS | DEFAULT STATE |
|---|---|---|---|---|
| 0xE9 | 4 | prescale | THD Manager (pre) - provide boost if desired to clip | 0080 0000 |
| 0xEA | 4 | postscale | THD Manager (post) - cut clipping signal to final level | 0080 0000 |

### *7.6.2.46 SDIN5 Input Mixer (0xEC–0xF3)*

Each gain coefficient is in 28-bit (5.23) format, so 0x80 0000 is a gain of 1. Each gain coefficient is written as a 32-bit word with the upper four bits not used. For eight gain coefficients, the total is 32 bytes.

**Table 80. SDIN5 Input Mixers**

| I²C SUBADDRESS | TOTAL BYTES | REGISTER Fields | DESCRIPTION OF CONTENTS | DEFAULT STATE |
|---|---|---|---|---|
| 0xEC | 8 | I_to_ipmix[1] | SDIN5-left (Ch9) I to input mixer 1 coefficient (default = 0) u[31:28],L[27:0] | 0000 0000 |
| | | J_to_ipmix[1] | SDIN5-right (Ch10) J to input mixer 1 coefficient (default = 0) u[31:28],R[27:0] | 0000 0000 |
| 0xED | 8 | I_to_ipmix[2] | SDIN5-left (Ch9) I to input mixer 2 coefficient (default = 0) u[31:28],L[27:0] | 0000 0000 |
| | | J_to_ipmix[2] | SDIN5-right (Ch10) J to input mixer 2 coefficient (default = 0) u[31:28],R[27:0] | 0000 0000 |
| 0xEE | 8 | I_to_ipmix[3] | SDIN5-left (Ch9) I to input mixer 3 coefficient (default = 0) u[31:28],L[27:0] | 0000 0000 |
| | | J_to_ipmix[3] | SDIN5-right (Ch10) J to input mixer 3 coefficient (default = 0) u[31:28],R[27:0] | 0000 0000 |
| 0xEF | 8 | I_to_ipmix[4] | SDIN5-left (Ch9) I to input mixer 4 coefficient (default = 0) u[31:28],L[27:0] | 0000 0000 |
| | | J_to_ipmix[4] | SDIN5-right (Ch10) J to input mixer 4 coefficient (default = 0) u[31:28],R[27:0] | 0000 0000 |
| 0xF0 | 8 | I_to_ipmix[5] | SDIN5-left (Ch9) I to input mixer 5 coefficient (default = 0) u[31:28],L[27:0] | 0000 0000 |
| | | J_to_ipmix[5] | SDIN5-right (Ch10) J to input mixer 5 coefficient (default = 0) u[31:28],R[27:0] | 0000 0000 |
| 0xF1 | 8 | I_to_ipmix[6] | SDIN5-left (Ch9) I to input mixer 6 coefficient (default = 0) u[31:28],L[27:0] | 0000 0000 |
| | | J_to_ipmix[6] | SDIN5-right (Ch10) J to input mixer 6 coefficient (default = 0) u[31:28],R[27:0] | 0000 0000 |
| 0xF2 | 8 | I_to_ipmix[7] | SDIN5-left (Ch9) I to input mixer 7 coefficient (default = 0) u[31:28],L[27:0] | 0000 0000 |
| | | J_to_ipmix[7] | SDIN5-right (Ch10) J to input mixer 7 coefficient (default = 0) u[31:28],R[27:0] | 0000 0000 |
| 0xF3 | 8 | I_to_ipmix[8] | SDIN5-left (Ch9) I to input mixer 8 coefficient (default = 0) u[31:28],L[27:0] | 0000 0000 |
| | | J_to_ipmix[8] | SDIN5-right (Ch10) J to input mixer 8 coefficient (default = 0) u[31:28],R[27:0] | 0000 0000 |


Copyright © 2012–2015, Texas Instruments Incorporated

### 7.6.2.47 192kHZ Process Flow Output Mixer (0xF4–0xF7)

Each gain coefficient is in 28-bit (5.23) format, so 0x80 0000 is a gain of 1. Each gain coefficient is written as a 32-bit word with the upper four bits not used. For eight gain coefficients, the total is 32 bytes.

**Table 81. 192kHz Process Flow Output Mixer**

| I²C SUBADDRESS | TOTAL BYTES | REGISTER Fields | DESCRIPTION OF CONTENTS | DEFAULT STATE |
|---|---|---|---|---|
| 0xF4 | 16 | P1_to_opmix[1] | Path 1 processing to output mixer 1 coefficient (default = 1) u[31:28], P1[27:0] | 0080 0000 |
| | | P2_to_opmix[1] | Path 2 processing to output mixer 1 coefficient (default = 0) u[31:28], P2[27:0] | 0000 0000 |
| | | P3_to_opmix[1] | Path 3 processing to output mixer 1 coefficient (default = 0) u[31:28], P3[27:0] | 0000 0000 |
| | | P4_to_opmix[1] | Path 4 processing to output mixer 1 coefficient (default = 0) u[31:28], P4[27:0] | 0000 0000 |
| 0xF5 | 16 | P1_to_opmix[2] | Path 1 processing to output mixer 2 coefficient (default = 0) u[31:28], P1[27:0] | 0000 0000 |
| | | P2_to_opmix[2] | Path 2 processing to output mixer 2 coefficient (default = 1) u[31:28], P2[27:0] | 0080 0000 |
| | | P3_to_opmix[2] | Path 3 processing to output mixer 2 coefficient (default = 0) u[31:28], P3[27:0] | 0000 0000 |
| | | P4_to_opmix[2] | Path 4 processing to output mixer 2 coefficient (default = 0) u[31:28], P4[27:0] | 0000 0000 |
| 0xF6 | 16 | P1_to_opmix[3] | Path 1 processing to output mixer 3 coefficient (default = 0) u[31:28], P1[27:0] | 0000 0000 |
| | | P2_to_opmix[3] | Path 2 processing to output mixer 3 coefficient (default = 0) u[31:28], P2[27:0] | 0000 0000 |
| | | P3_to_opmix[3] | Path 3 processing to output mixer 3 coefficient (default = 1) u[31:28], P3[27:0] | 0080 0000 |
| | | P4_to_opmix[3] | Path 4 processing to output mixer 3 coefficient (default = 0) u[31:28], P4[27:0] | 0000 0000 |
| 0xF7 | 16 | P1_to_opmix[4] | Path 1 processing to output mixer 4 coefficient (default = 0) u[31:28], P1[27:0] | 0000 0000 |
| | | P2_to_opmix[4] | Path 2 processing to output mixer 4 coefficient (default = 0) u[31:28], P2[27:0] | 0000 0000 |
| | | P3_to_opmix[4] | Path 3 processing to output mixer 4 coefficient (default = 0) u[31:28], P3[27:0] | 0000 0000 |
| | | P4_to_opmix[4] | Path 4 processing to output mixer 4 coefficient (default = 1) u[31:28], P4[27:0] | 0080 0000 |

Copyright © 2012–2015, Texas Instruments Incorporated

### 7.6.2.48 192kHz Dolby Downmix Coefficients (0xFB and 0xFC)

Each gain coefficient is in 28-bit (5.23) format, so 0x80 0000 is a gain of 1. Each gain coefficient is written as a 32-bit word with the upper four bits not used. For eight gain coefficients, the total is 32 bytes.

**Table 82. 192kHz Dolby Downmix Coefficients**

| $I^2C$ SUBADDRESS | TOTAL BYTES | REGISTER Fields | DESCRIPTION OF CONTENTS | DEFAULT STATE |
|---|---|---|---|---|
| 0xFB | 16 | dolby_COEF1L (D1_L) | 192kHz SDIN1-left to SDOUT-left down-mix coefficient (default = 1/3.121) | 0029 0333 |
| | | dolby_COEF2L (D2_L) | 192kHz SDIN1-right to SDOUT-left down-mix coefficient (default = 0.707/3.121) | 001C FEEF |
| | | dolby_COEF3L (D3_L) | 192kHz SDIN3-left to SDOUT-left down-mix coefficient (default = -0.707/3.121) | FFE3 0111 |
| | | dolby_COEF4L (D4_L) | 192kHz SDIN3-right to SDOUT-left down-mix coefficient (default = -0.707/3.121) | FFE3 0111 |
| 0xFC | 16 | dolby_COEF1R (D1_R) | 192kHz SDIN1-left to SDOUT-right down-mix coefficient (default = 1/3.121) | 0029 0333 |
| | | dolby_COEF2R (D2_R) | 192kHz SDIN1-right to SDOUT-right down-mix coefficient (default = 0.707/3.121) | 001C FEEF |
| | | dolby_COEF3R (D3_R) | 192kHz SDIN3-left to SDOUT-right down-mix coefficient (default = 0.707/3.121) | 001C FEEF |
| | | dolby_COEF4R (D4_R) | 192kHz SDIN3-right to SDOUT-right down-mix coefficient (default = 0.707/3.121) | 001C FEEF |


Copyright © 2012–2015, Texas Instruments Incorporated

# 8 Application and Implementation

**NOTE**

Information in the following applications sections is not part of the TI component specification, and TI does not warrant its accuracy or completeness. TI's customers are responsible for determining suitability of components for their purposes. Customers should validate and test their design implementation to confirm system functionality.

## 8.1 Application Information

The TAS5548 is a PWM modulator that can take in up to 10 serial audio channels with 8 fully-differential PWM outputs, 2 fully-differential headphone PWM outputs, and up to 1 serial audio output. The eight PWM outputs can support single-ended or bridge-tied load-configured H-bridge power stages with either AD or BD modulation. The 10 inputs can be mixed and mapped internally to different outputs. The TAS5548 is designed to seamlessly interface with most digital decoders, and supports the DTS-HD specification and Blu-ray HTiB applications.

The TAS5548 also contains a DAP that can implement up to 56 biquads across the 8 channels for sampling rates up to 96-kHz, and 22 for sampling rates above 96-kHz. Two 4-channel sample rate converters process the inputs before passing the signals to the DAP. The TAS5548 can be driven by an external crystal or an external MCLK. Two 3.3-V power supplies are required for a digital and analog supply.

## 8.2 Typical Applications

Typical applications for the TAS5548 are 6- to 8-channel audio systems such as DVD or AV receivers. Figure 45 shows the basic system diagram of the DVD receiver.

### 8.2.1 TAS5558 DVD Receiver Application

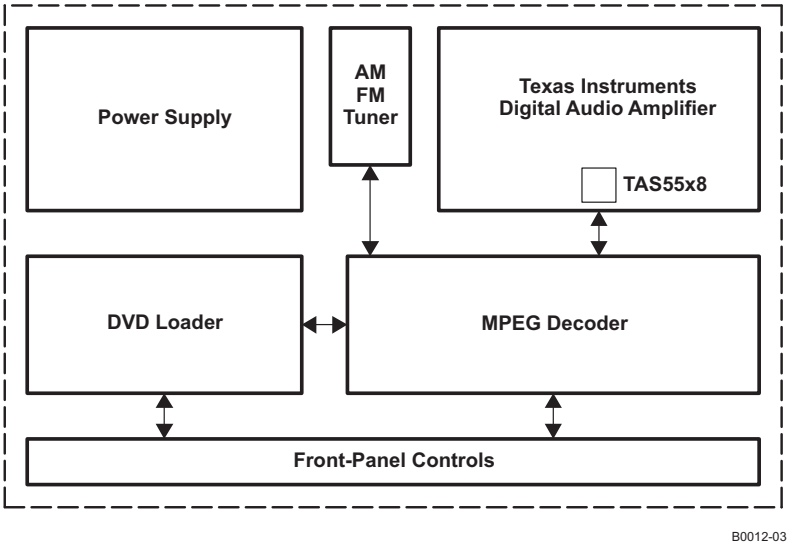


**Figure 45. Typical TAS5548 Application (DVD Receiver)**

#### *8.2.1.1 Design Requirements*

For this design example, use the parameters listed in Table 83 as the input parameters.

**Table 83. Design Parameters**

| PARAMETER | VALUE |
|---|---|
| Device control method | Software control through I2C communication for register settings |
| Digital Audio input | Right-justified, I2S, or left-justified. |
| Power stage | Audio amplifier with PWM input |

#### 8.2.1.2 Detailed Design Procedure

- System software control over I2C for part configuration on power up
- I2S sample rate and number of channels
  - If the sampling rate above 96-kHz, then the number of biquads is limited.
- Tuning of biquad filters to preferred settings
- Possible headphone out that would require an output filter
- Use of the TAS5548 Frequency Scaling AM Avoidance to prevent interference with AM tuner

#### 8.2.1.3 Application Curves

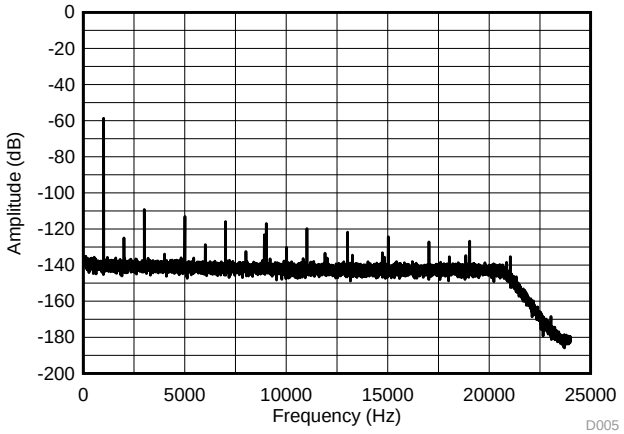


**Figure 46. Frequency Response at 48 kHz Sampling Rate with -60 dB Input at 1 kHz**


Copyright © 2012–2015, Texas Instruments Incorporated

### 8.2.2 Serial Port Master/Slave Configurations

The inputs to the Digital Audio Processor (DAP) come from the Asynchronous Sample Rate Converter block as follows:

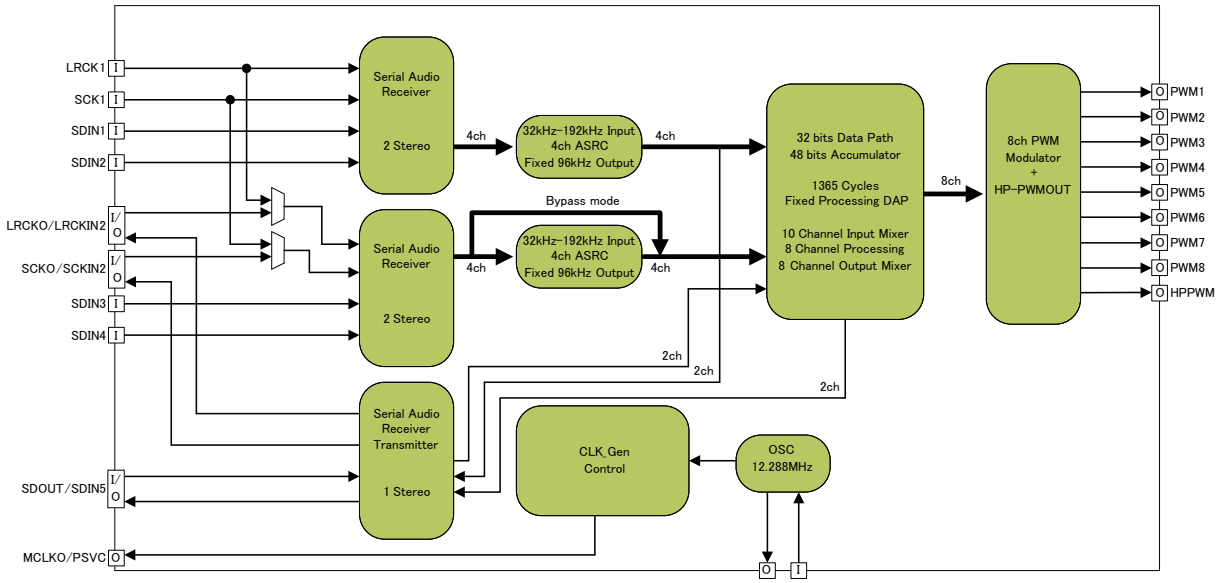


**Figure 47. Digital Audio Signal Flow Block Diagram**

#### *8.2.2.1 Design Requirements*

For this design example, use the parameters listed in Table 84 as the input parameters.

**Table 84. Design Parameters**

| PARAMETER | VALUE |
|---|---|
| Device control method | Software control through I2C communication for register settings |
| Digital Audio input | Right-justified, I2S, or left-justified. |
| Power stage | Audio amplifier with PWM input |

#### *8.2.2.2 Detailed Design Procedure*

The DAP can feed audio data to and from the Serial Audio ports in the following manner. There are 3 main use cases:

1. **Use Case 1: External Karaoke Microphone Input (ADC in on SDIN5) or External I2S Subwoofer**
   (a) SDIN1 through 4 are slave to an external source (such as a media decoder IC).
   (b) A separate DOUT (for Sub) or Microphone Inout (SDIN5) needs to function at the post-ASRC rate.
   (c) Therefore, the device is configured to use MCLKO, SCLKO and LRCLKO.
2. **Use Case 2: Mixing two different data sources (e.g. Stereo Bluetooth I2S and CD/Media Decoder**
   (a) In an example where two different data sources need mixing, SDIN1/2 run at a different rate than SDIN3/4
   (b) SCLKIN-2 and LRCLKIN-2 are used to provide an LRCLK and SCLK for the second data synchronous data source.
   (c) DOUT (for a wireless sub) cannot be used in this mode, as no MCLKO, SCLKO or LRCLKO are available.
3. **Use Case 3: Creating an external loop for processing (e.g. using a TAS3108 or TAS3152 I2S processor)**
   (a) SDIN1/2 run with SCLK and LRCLK as a slave.
   (b) SDOUT acts as a "send for external processing", in master mode, synchronized to MLCKO, SCLKO, LRCLKO

(c) SDIN3/4 Act as a "return from external processing", in master mode, synchronized to MLCKO, SCLKO, LRCLKO

**Table 85. Master/Slave Serial Audio Receiver/Transmitter**

| | Slave Serial Audio port | Master Serial Audio port |
|---|---|---|
| Use case-1 | • To ASRC1 and ASRC2<br>– SCLK LRCLK<br>– Synchronous data<br>– SDIN1<br>– SDIN2<br>– SDIN3<br>– SDIN4 | • MCLKO<br>• SCLKO<br>• LRCLKO<br>• Synchronous data<br>– SDIN5(mic) or SDOUT |
| Use case-2 | • To ASRC1<br>– SCLK<br>– LRCLK<br>– Synchronous data<br>– SDIN1<br>– SDIN2<br>• To ASRC2<br>– SCLKIN-2<br>– LRCLKIN-2<br>– Synchronous data<br>– SDIN2-1<br>– SDIN2-2 | None of Master |
| Use case-3 | • To ASRC1<br>– SCLK<br>– LRCLK<br>– Synchronous data<br>– SDIN1<br>– SDIN2 | • MLCKO<br>• SCLKO<br>• LRCLKO<br>• Synchronous data<br>– SDIN2-1 (ASRC2)<br>– SDIN2-2 (ASRC2)<br>– SDIN5 or SDOUT |

By using use case-3, TAS5548 can connect TAS3108 as external co-processor as follows:

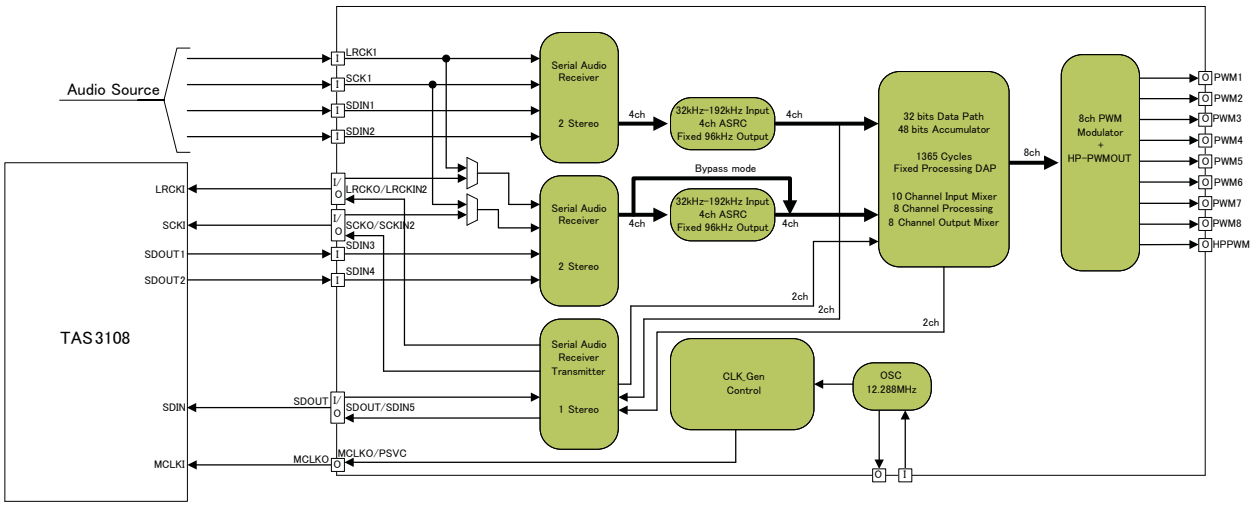


**Figure 48. TAS3108 as External Co-processor**


Copyright © 2012–2015, Texas Instruments Incorporated

#### 8.2.2.3 Application Curves

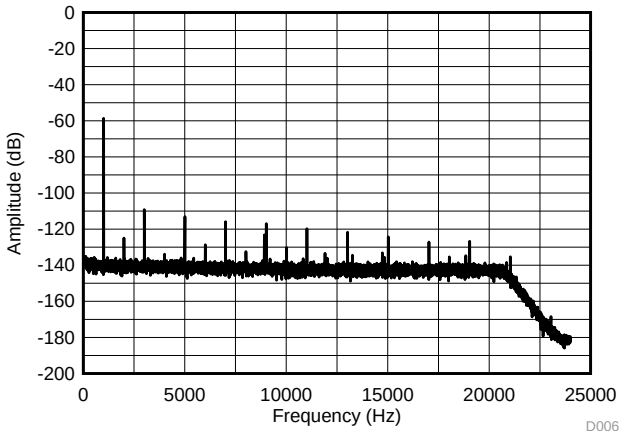


**Figure 49. Frequency Response at 48 kHz Sampling Rate with -60 dB Input at 1 kHz**

### 8.2.3 Device System Diagrams

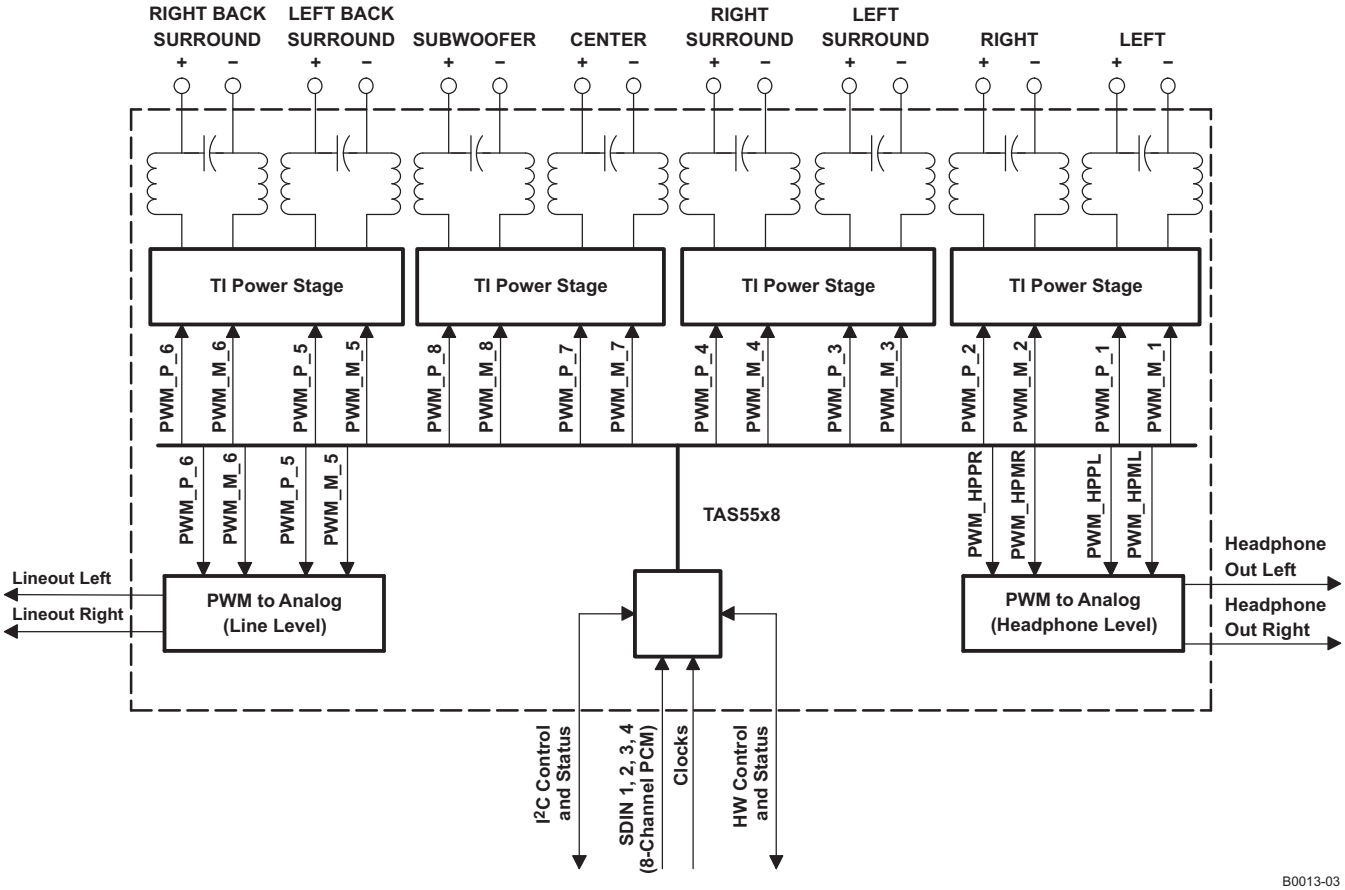


**Figure 50. Pass-Through Output Mixer TAS5548 Channel Configuration**

#### *8.2.3.1 Design Requirements*

- Device control method: Software control through I2C communication for register settings
- Digital Audio input: right-justified, I2S, or left-justified at 96kHz or below to enable use of all 8 channels and related biquads
- Power stage: Audio amplifier with PWM input
- Clock Source: External clocks from I2S master

#### *8.2.3.2 Detailed Design Procedure*

- System software control over I2C for part configuration on power up
- I2S sample rate and number of channels
  - If the sampling rate is above 96-kHz, then the number of biquads is limited.
- Tuning of biquad filters to preferred settings
- Possible headphone out that would require an output filter
- Choose the appropriate LC output filters after power stage for speaker load


Copyright © 2012–2015, Texas Instruments Incorporated

#### 8.2.3.3 Application Curves

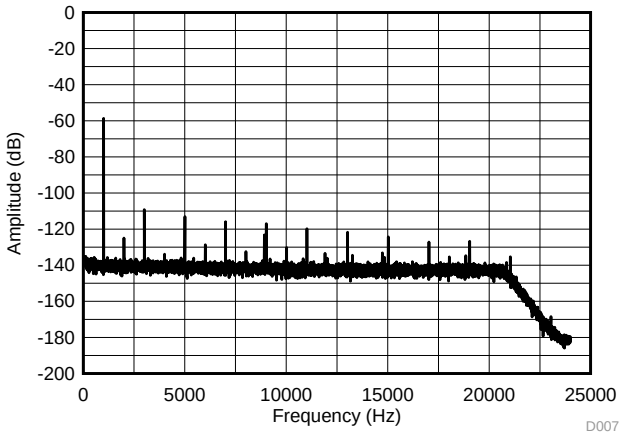


**Figure 51. Frequency Response at 48 kHz Sampling Rate with -60 dB Input at 1 kHz**

## 8.3 Do's and Don'ts

### 8.3.1 Frequency Scaling AM Avoidance

The AM avoidance strategy exploits the presence of the ASRC. The APLL output frequency is directly varied by varying the multiplier ratio in the PLL loop. The dividers to generate clocks from the APLL are fixed at their nominal division factor, so the result is that the internal sampling rate is changing accordingly.

The ASRC will adapt with this changing output rate (the internal sampling rate) and convert the incoming sampling rates to this rate accordingly. The rest of the circuit does not change and operates normally, but since the APLL output frequency is varied while the clock dividers are fixed, the PWM carrier frequency becomes varied also, which is the goal of this AM avoidance strategy.

This shift in processing rate will effect time-domain digital processing, such as the EQ's and DRC's decay values by the value in Freq_Error below.

**Table 86. APLL/DAP/ASRC Clock Frequencies with New AM Avoidance Strategy**

| Mode | Input FS | XTLA | Prescale | Feedback | DCLK | Internal SR | DAP CLK | # cycles per FS | ASRC CLK | PWM rate | Freq_Error |
|---|---|---|---|---|---|---|---|---|---|---|---|
| Normal | 8 - 192k | 12288 | 4 | 64 | 196608 | 96 | 131072 | 1365.33 | 98304 | 384 | 0.00% |
| AM#1 | 8 - 192k | 12288 | 4 | 62 | 190464 | 93 | 126976 | 1365.33 | 95232 | 372 | -3.13% |
| AM#2 | 8 - 192k | 12288 | 4 | 60 | 184320 | 90 | 12288 | 1365.33 | 92160 | 360 | -6.25% |
| AM#3 | 8 - 192k | 12288 | 4 | 58 | 178176 | 87 | 118784 | 1365.33 | 89088 | 348 | -9.38% |
| AM#4 | 8 - 192k | 12288 | 4 | 56 | 172032 | 84 | 114688 | 1365.33 | 86016 | 336 | -12.50% |

## 8.4 Initialization Set Up

### 8.4.1 Startup Register Writes to get Audio Functioning

By default, the device starts up with its outputs muted. The following writes should be used to bring it out of standby:

**TAS5548**

1. Exit Shutdown 0x03 = A0
2. Set Master Volume 0xD9 = 00 00 00 48


Copyright © 2012–2015, Texas Instruments Incorporated

# 9 Power Supply Recommendations

## 9.1 Power Supply

The TAS5548 requires a single 3.3-V nominal supply for pins DVDD1, DVDD2, AVDD, and AVDD_PWM. The decoupling capacitors for the power supplies should be placed close to the device terminals.

## 9.2 Energy Manager

TAS5548 has an Energy Manager that can be used to monitor/control the overall energy in the system. The key features are:

1. There are separate controllers for Satellite (EMO1) and Sub (EMO2) channels. If EMO2 is not enabled, then the EMO1 pin is OR'd with the output of the subwoofer comparator.
2. The satellite channels participating in the energy estimation are selectable. For example, in the 5.1 Mode, the line out channels can be programmed to not participate in the energy estimation.
3. There is a mixer for each channel before mixing. This is for scaling each channel before adding. The energy of all participating satellite channels are added and compared with a programmable threshold. If the value crosses the threshold, the satellite_over_power bit in the status register is set. Similarly, if the overall energy is lower than another programmable register, the satellite_idle bit in the status register is set. Both these bits are “sticky,” meaning once set, the external controller has to write a “0” to clear the bit
4. Similar to the satellite channel, the sub channel energy is also estimated and compared against an upper and lower threshold. If above the upper threshold, the sub_over_power bit is set and if below the threshold, the sub_idle_bit are set. These are also "sticky" bits. Sub channels also have a disable pin that bypass energy comparison.
5. An OR of the 4 status bits are available on EMO pin

External controller on the detection of EMO interrupt (pin going high) can read the status register for more information.

The controller can shutdown the PWM for idle mode and or reduce channel energy to reduce overall power. The Controller discerns more details on the EMO condition by using the status and enable bits. Figure 52 shows the EMO system for satellite channels. A similar EMO system for the subwoofer channel also will be implemented. The EMO pin is shared between satellite and sub channels.

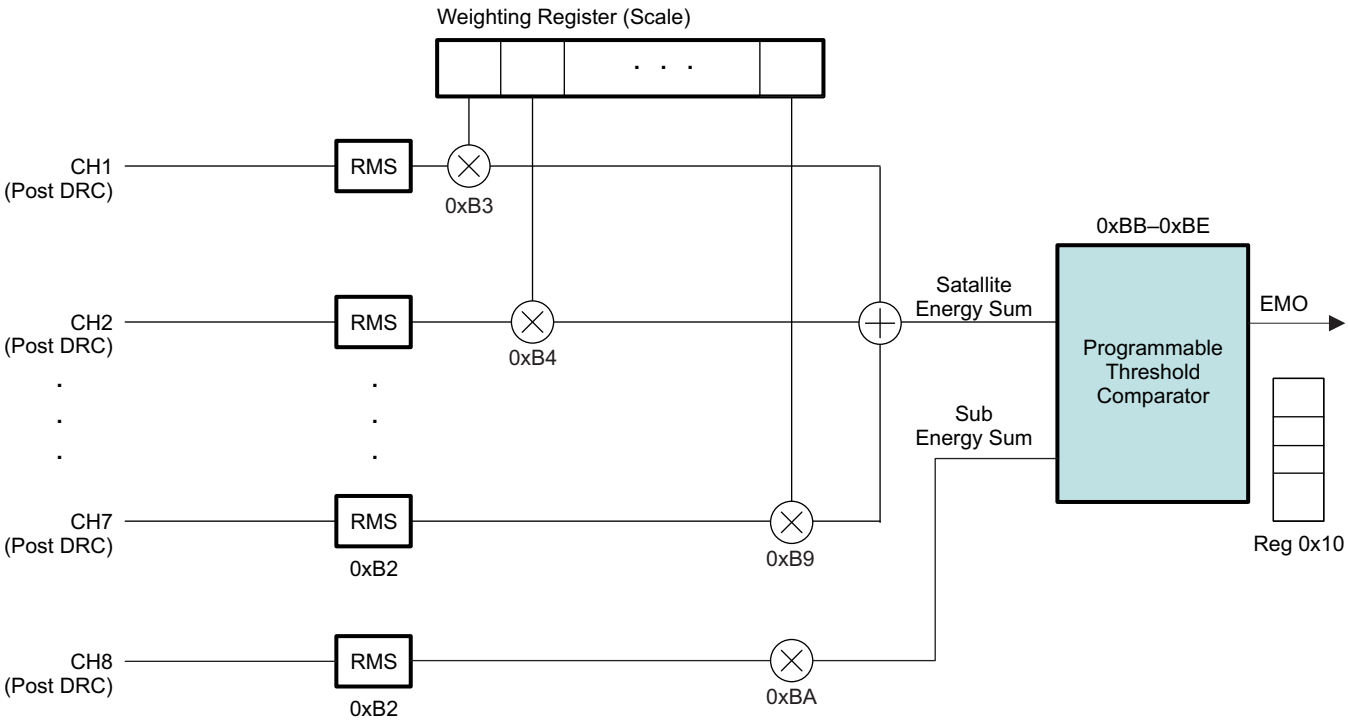


**Figure 52. Energy Manager**

## 9.3 Programming Energy Manager

Energy Manager related registers are 0xBA to 0xBE. 0xB2 is a 16 byte averaging filter (alpha filter) for both satellite and sub channel. The scaling coefficients are 0xB3 to 0xBA that multiplies energy of each channel with a scaling factor. The threshold registers are (0xBB, 0xBC, 0xBD and 0xBE) and 0x10 for the results register.

**Table 87. Energy Manager Status Register (x10)**

| D3 | D2 | D1 | D0 | FUNCTION |
|---|---|---|---|---|
| – | – | – | 0/1 | Energy below the low threshold for satellite channels |
| – | – | 0/1 | – | Energy above the high threshold for satellite channels |
| – | 0/1 | – | – | Energy below the low threshold for sub-woofer channel |
| 0/1 | – | – | – | Energy above the high threshold for sub-woofer channels |

Provision to read the whole byte and a way to clear the 4 LSBs (one by one).


Copyright © 2012–2015, Texas Instruments Incorporated

# 10 Layout

## 10.1 Layout Guidelines

- The TAS5548 uses the PCB as a heat sink; therefore, the PowerPAD must be soldered to the PCB, and adequate copper areas and copper vias connecting the top, bottom, and internal layers should be used.
- Decoupling capacitors should be placed as close to the DVDD1_CORE, DVDD2_CORE, VR_DIG, AVDD_PWM and AVDD as possible. These decoupling capacitors should also have a path through the GND plane back to the power pad, as shown by the blue area in the layout example in Figure 53.
- A single common GND plane between AGND and DGND is recommended to avoid a potential voltage difference between them. Multiple vias from the TAS5548 PowerPAD should be connected to GND with a large copper pad as well as vias to all GND planes.
- Further guidelines can be found on the layout example in Figure 53.
- A more detailed example of the PCB layout can be found in the *TAS5548EVM User's Guide* (SLOU351).

## 10.2 Layout Example

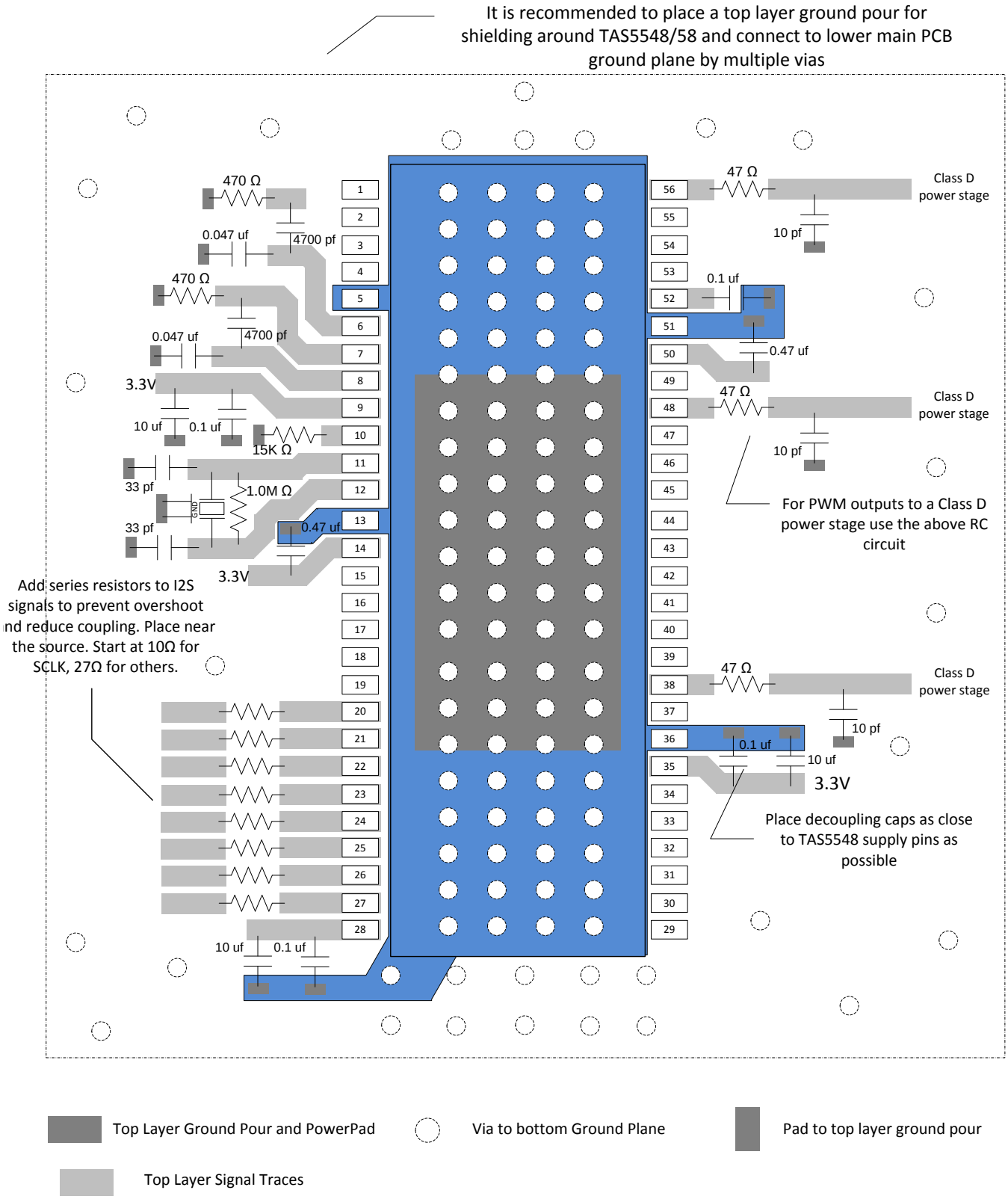


**Figure 53. TAS5548 Layout Example**


Copyright © 2012–2015, Texas Instruments Incorporated

## Layout Example (continued)

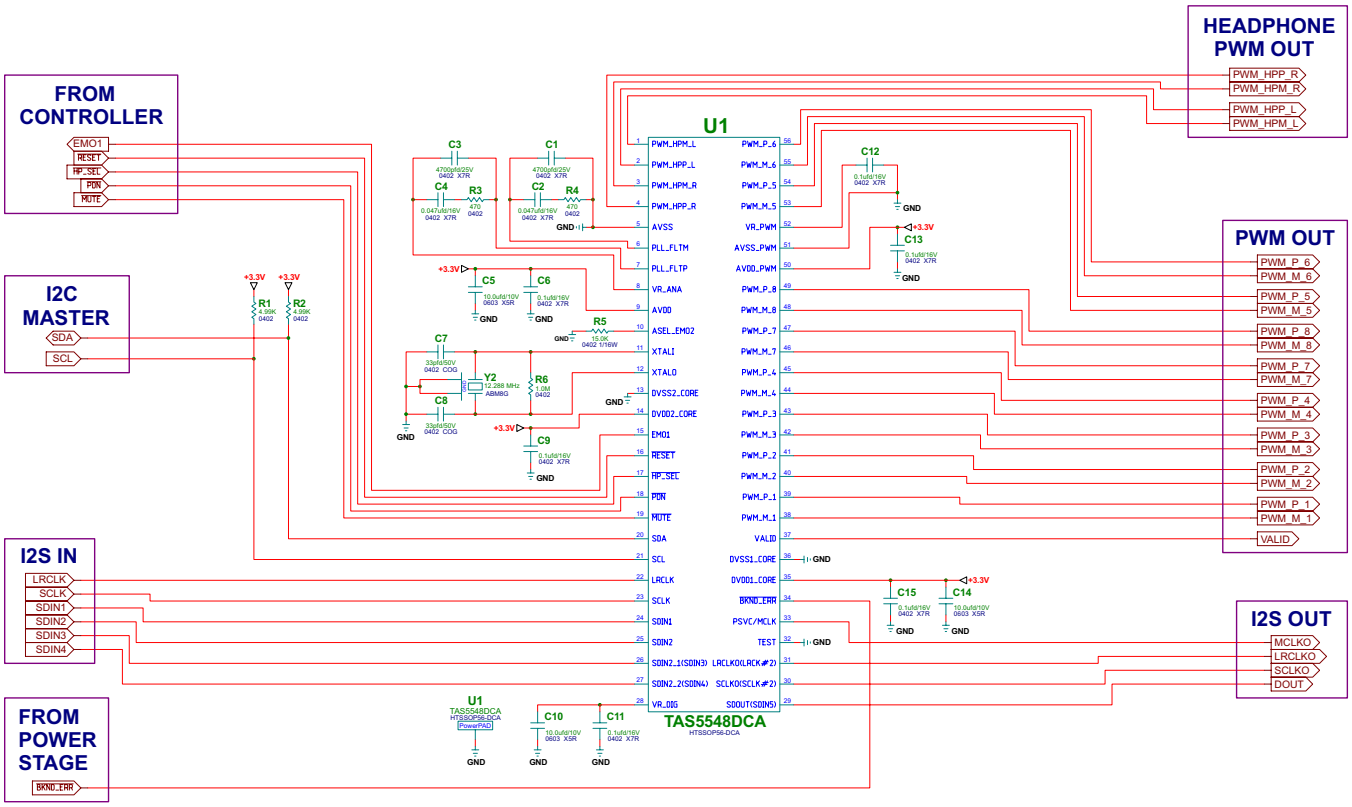


**Figure 54. Recommended External Components**

# 11 Device and Documentation Support

## 11.1 Documentation Support

### 11.1.1 Related Documentation

For related documentation, see the following:

*TAS5548EVM User's Guide* (SLOU351)

## 11.2 Trademarks

Matlab is a trademark of Math Works, Inc.
All other trademarks are the property of their respective owners.

## 11.3 Electrostatic Discharge Caution

These devices have limited built-in ESD protection. The leads should be shorted together or the device placed in conductive foam during storage or handling to prevent electrostatic damage to the MOS gates.

## 11.4 Glossary

SLYZ022 — *TI Glossary*.

This glossary lists and explains terms, acronyms, and definitions.

# 12 Mechanical, Packaging, and Orderable Information

The following pages include mechanical, packaging, and orderable information. This information is the most current data available for the designated devices. This data is subject to change without notice and revision of this document. For browser-based versions of this data sheet, refer to the left-hand navigation.


Copyright © 2012–2015, Texas Instruments Incorporated

## PACKAGING INFORMATION

| Orderable part number | Status (1) | Material type (2) | Package \| Pins | Package qty \| Carrier | RoHS (3) | Lead finish/ Ball material (4) | MSL rating/ Peak reflow (5) | Op temp (°C) | Part marking (6) |
|---|---|---|---|---|---|---|---|---|---|
| TAS5548DCA | Active | Production | HTSSOP (DCA) \| 56 | 35 \| TUBE | Yes | NIPDAU | Level-3-260C-168 HR | -40 to 85 | TAS5548 |
| TAS5548DCA.A | Active | Production | HTSSOP (DCA) \| 56 | 35 \| TUBE | Yes | NIPDAU | Level-3-260C-168 HR | -40 to 85 | TAS5548 |
| TAS5548DCAR | Active | Production | HTSSOP (DCA) \| 56 | 2000 \| LARGE T&R | Yes | NIPDAU | Level-3-260C-168 HR | -40 to 85 | TAS5548 |
| TAS5548DCAR.A | Active | Production | HTSSOP (DCA) \| 56 | 2000 \| LARGE T&R | Yes | NIPDAU | Level-3-260C-168 HR | -40 to 85 | TAS5548 |
| TAS5548DCARG4.A | Active | Production | HTSSOP (DCA) \| 56 | 2000 \| LARGE T&R | Yes | NIPDAU | Level-3-260C-168 HR | -40 to 85 | TAS5548 |

(1) **Status:** For more details on status, see our product life cycle.

(2) **Material type:** When designated, preproduction parts are prototypes/experimental devices, and are not yet approved or released for full production. Testing and final process, including without limitation quality assurance, reliability performance testing, and/or process qualification, may not yet be complete, and this item is subject to further changes or possible discontinuation. If available for ordering, purchases will be subject to an additional waiver at checkout, and are intended for early internal evaluation purposes only. These items are sold without warranties of any kind.

(3) **RoHS values:** Yes, No, RoHS Exempt. See the TI RoHS Statement for additional information and value definition.

(4) **Lead finish/Ball material:** Parts may have multiple material finish options. Finish options are separated by a vertical ruled line. Lead finish/Ball material values may wrap to two lines if the finish value exceeds the maximum column width.

(5) **MSL rating/Peak reflow:** The moisture sensitivity level ratings and peak solder (reflow) temperatures. In the event that a part has multiple moisture sensitivity ratings, only the lowest level per JEDEC standards is shown. Refer to the shipping label for the actual reflow temperature that will be used to mount the part to the printed circuit board.

(6) **Part marking:** There may be an additional marking, which relates to the logo, the lot trace code information, or the environmental category of the part.

Multiple part markings will be inside parentheses. Only one part marking contained in parentheses and separated by a "~" will appear on a part. If a line is indented then it is a continuation of the previous line and the two combined represent the entire part marking for that device.

**Important Information and Disclaimer:**The information provided on this page represents TI's knowledge and belief as of the date that it is provided. TI bases its knowledge and belief on information provided by third parties, and makes no representation or warranty as to the accuracy of such information. Efforts are underway to better integrate information from third parties. TI has taken and continues to take reasonable steps to provide representative and accurate information but may not have conducted destructive testing or chemical analysis on incoming materials and chemicals. TI and TI suppliers consider certain information to be proprietary, and thus CAS numbers and other limited information may not be available for release.

In no event shall TI's liability arising out of such information exceed the total purchase price of the TI part(s) at issue in this document sold by TI to Customer on an annual basis.

## TAPE AND REEL INFORMATION

**REEL DIMENSIONS**

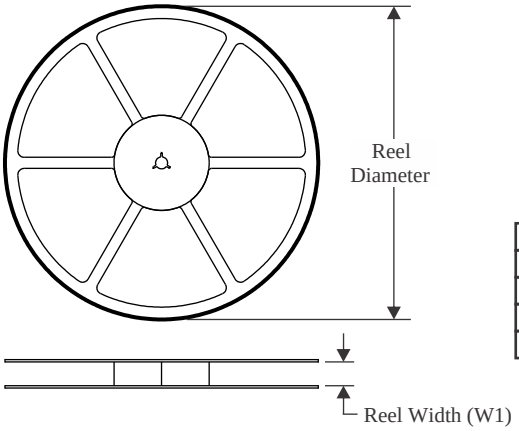


**TAPE DIMENSIONS**

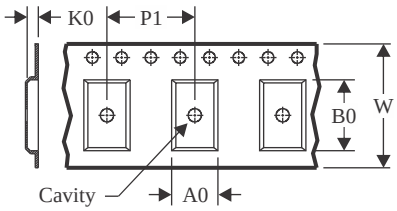


| | |
|---|---|
| A0 | Dimension designed to accommodate the component width |
| B0 | Dimension designed to accommodate the component length |
| K0 | Dimension designed to accommodate the component thickness |
| W | Overall width of the carrier tape |
| P1 | Pitch between successive cavity centers |

**QUADRANT ASSIGNMENTS FOR PIN 1 ORIENTATION IN TAPE**

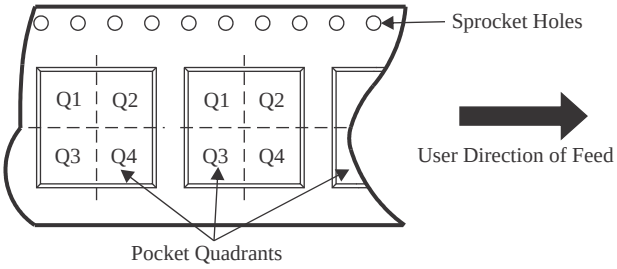


*All dimensions are nominal

| Device | Package Type | Package Drawing | Pins | SPQ | Reel Diameter (mm) | Reel Width W1 (mm) | A0 (mm) | B0 (mm) | K0 (mm) | P1 (mm) | W (mm) | Pin1 Quadrant |
|---|---|---|---|---|---|---|---|---|---|---|---|---|
| TAS5548DCAR | HTSSOP | DCA | 56 | 2000 | 330.0 | 24.4 | 8.6 | 15.6 | 1.8 | 12.0 | 24.0 | Q1 |

TAPE AND REEL BOX DIMENSIONS

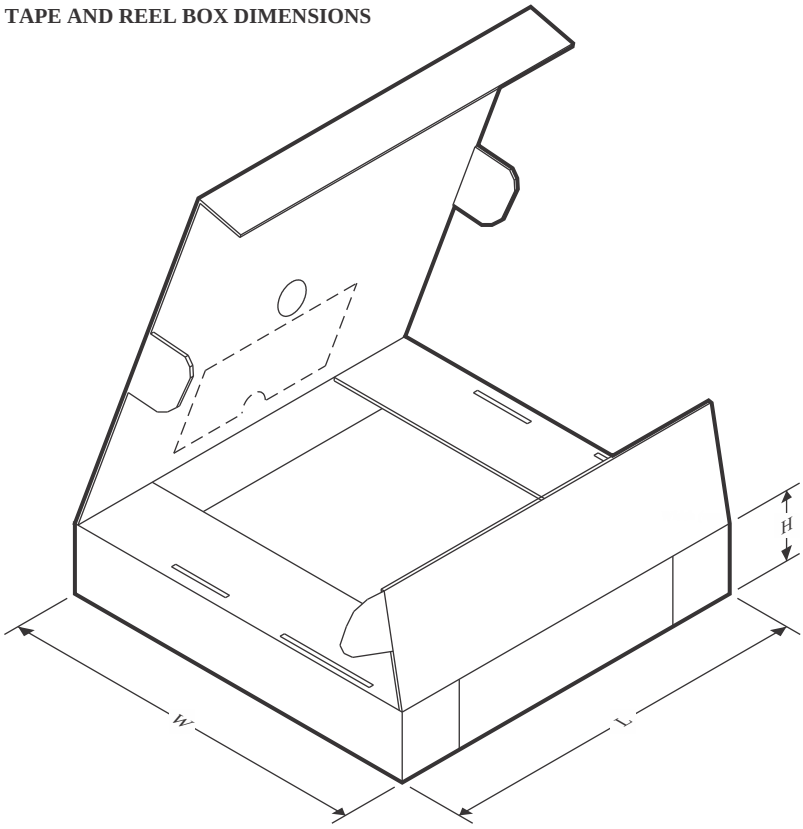


*All dimensions are nominal

| Device | Package Type | Package Drawing | Pins | SPQ | Length (mm) | Width (mm) | Height (mm) |
|---|---|---|---|---|---|---|---|
| TAS5548DCAR | HTSSOP | DCA | 56 | 2000 | 350.0 | 350.0 | 43.0 |

## TUBE

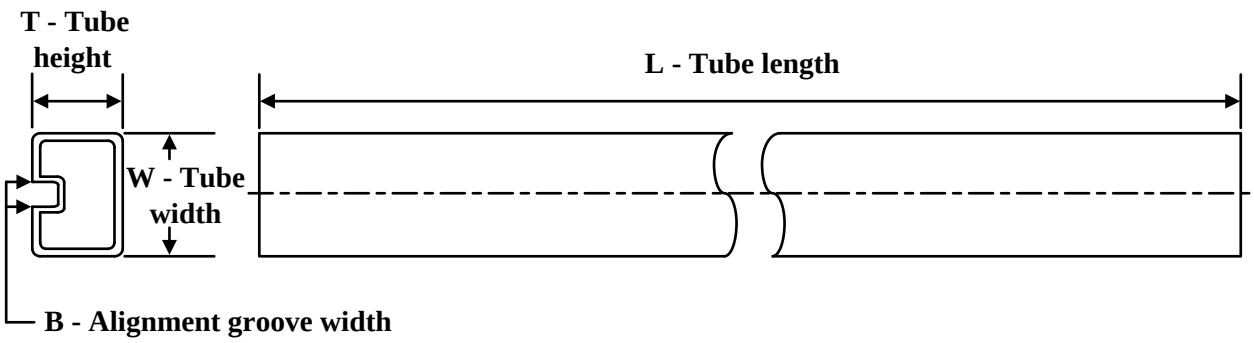


*All dimensions are nominal

| Device | Package Name | Package Type | Pins | SPQ | L (mm) | W (mm) | T (µm) | B (mm) |
|---|---|---|---|---|---|---|---|---|
| TAS5548DCA | DCA | HTSSOP | 56 | 35 | 530 | 11.89 | 3600 | 4.9 |
| TAS5548DCA.A | DCA | HTSSOP | 56 | 35 | 530 | 11.89 | 3600 | 4.9 |

# GENERIC PACKAGE VIEW

## DCA 56

## PowerPAD™ TSSOP - 1.2 mm max height

**8.1 x 14, 0.5 mm pitch**

PLASTIC SMALL OUTLINE

This image is a representation of the package family, actual package may vary.
Refer to the product data sheet for package details.

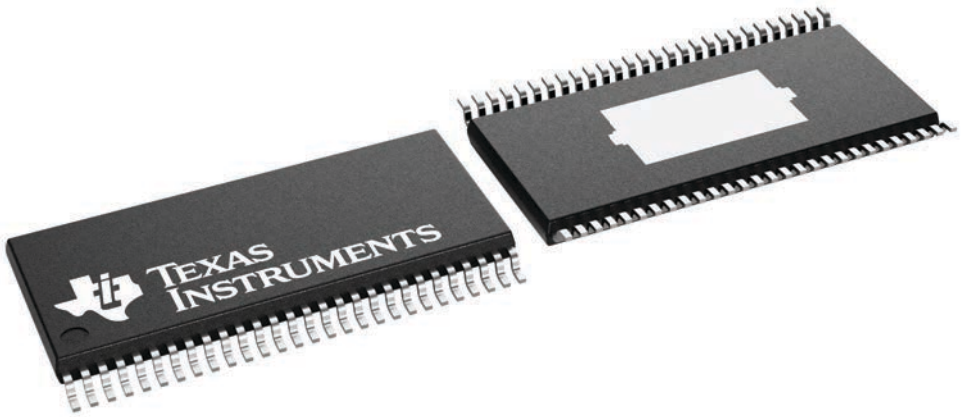


4231600/A

DCA (R-PDSO-G56) PowerPAD™ PLASTIC SMALL-OUTLINE

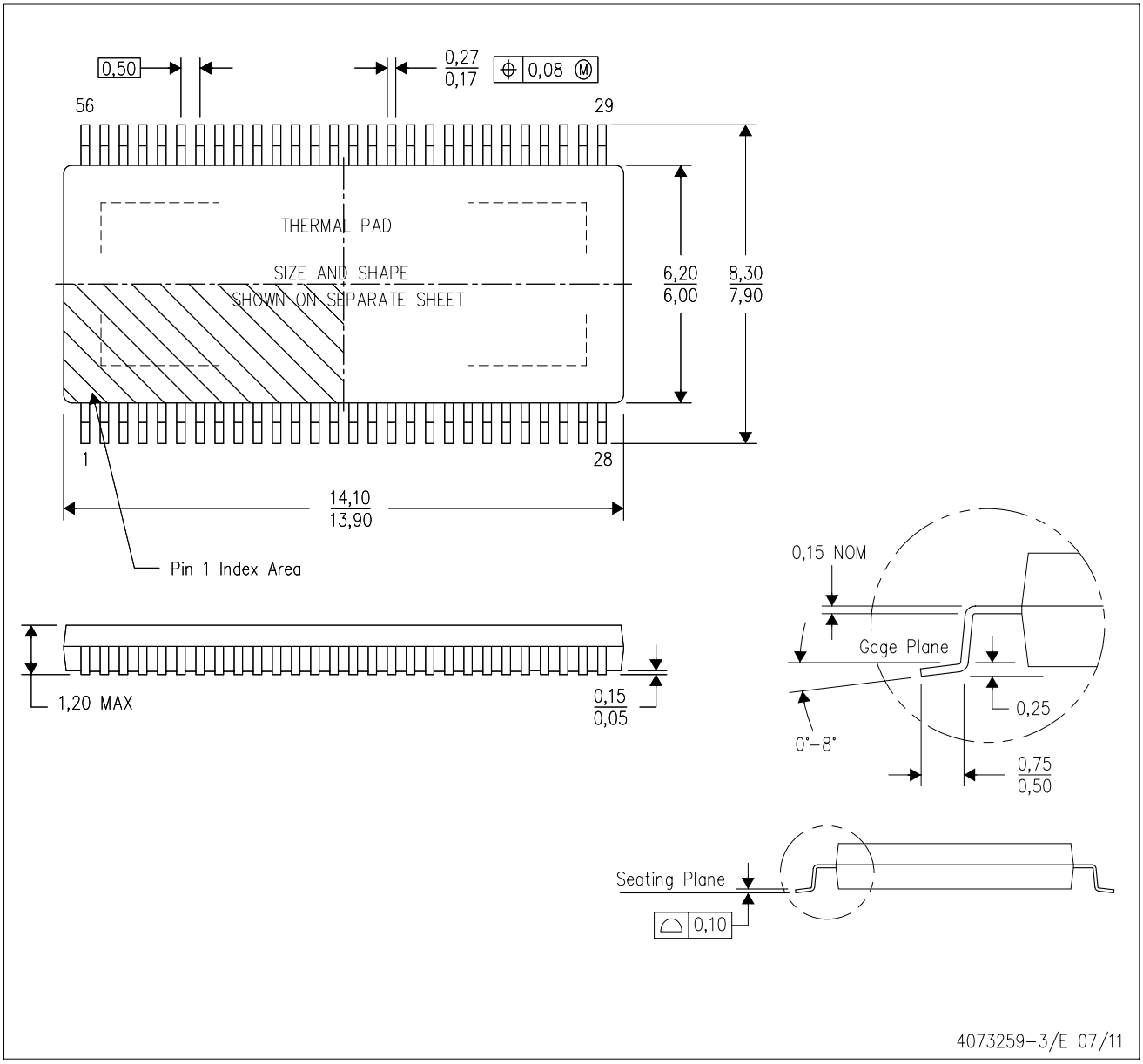


NOTES:
A. All linear dimensions are in millimeters. Dimensioning and tolerancing per ASME Y14.5M–1994.
B. This drawing is subject to change without notice.
C. Body dimensions do not include mold flash or protrusion not to exceed 0,15.
D. This package is designed to be soldered to a thermal pad on the board. Refer to Technical Brief, PowerPad Thermally Enhanced Package, Texas Instruments Literature No. SLMA002 for information regarding recommended board layout. This document is available at www.ti.com <http://www.ti.com>.
E. See the additional figure in the Product Data Sheet for details regarding the exposed thermal pad features and dimensions.
F. Falls within JEDEC MO-153

**PowerPAD is a trademark of Texas Instruments.**

DCA (R-PDSO-G56) PowerPAD™ PLASTIC SMALL OUTLINE

THERMAL INFORMATION

This PowerPAD™ package incorporates an exposed thermal pad that is designed to be attached to a printed circuit board (PCB). The thermal pad must be soldered directly to the PCB. After soldering, the PCB can be used as a heatsink. In addition, through the use of thermal vias, the thermal pad can be attached directly to the appropriate copper plane shown in the electrical schematic for the device, or alternatively, can be attached to a special heatsink structure designed into the PCB. This design optimizes the heat transfer from the integrated circuit (IC).

For additional information on the PowerPAD package and how to take advantage of its heat dissipating abilities, refer to Technical Brief, PowerPAD Thermally Enhanced Package, Texas Instruments Literature No. SLMA002 and Application Brief, PowerPAD Made Easy, Texas Instruments Literature No. SLMA004. Both documents are available at www.ti.com.

The exposed thermal pad dimensions for this package are shown in the following illustration.

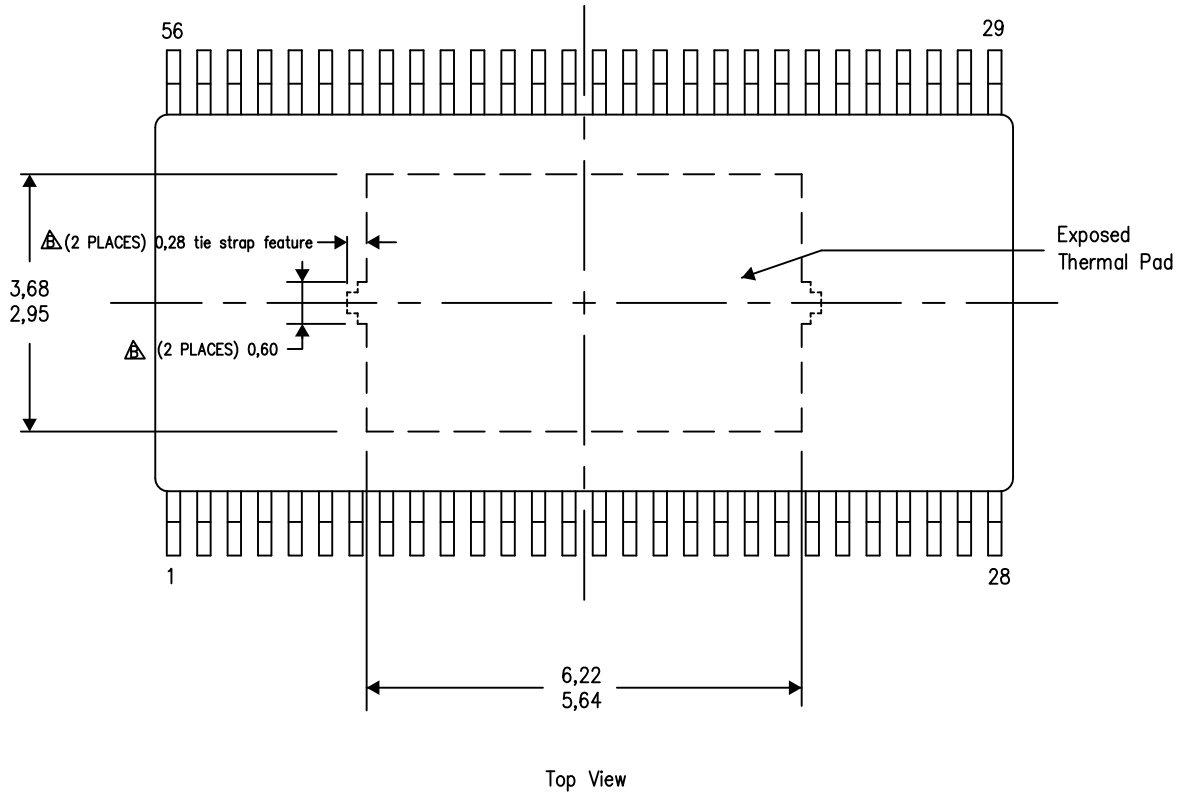


Exposed Thermal Pad Dimensions

4206320-13/S 11/14

NOTES: A. All linear dimensions are in millimeters
B. Keep-out features are identified to prevent board routing interference.
These exposed metal features may vary within the identified area or completely absent on some devices.

PowerPAD is a trademark of Texas Instruments.

DCA (R–PDSO–G56) PowerPAD™ PLASTIC SMALL OUTLINE PACKAGE

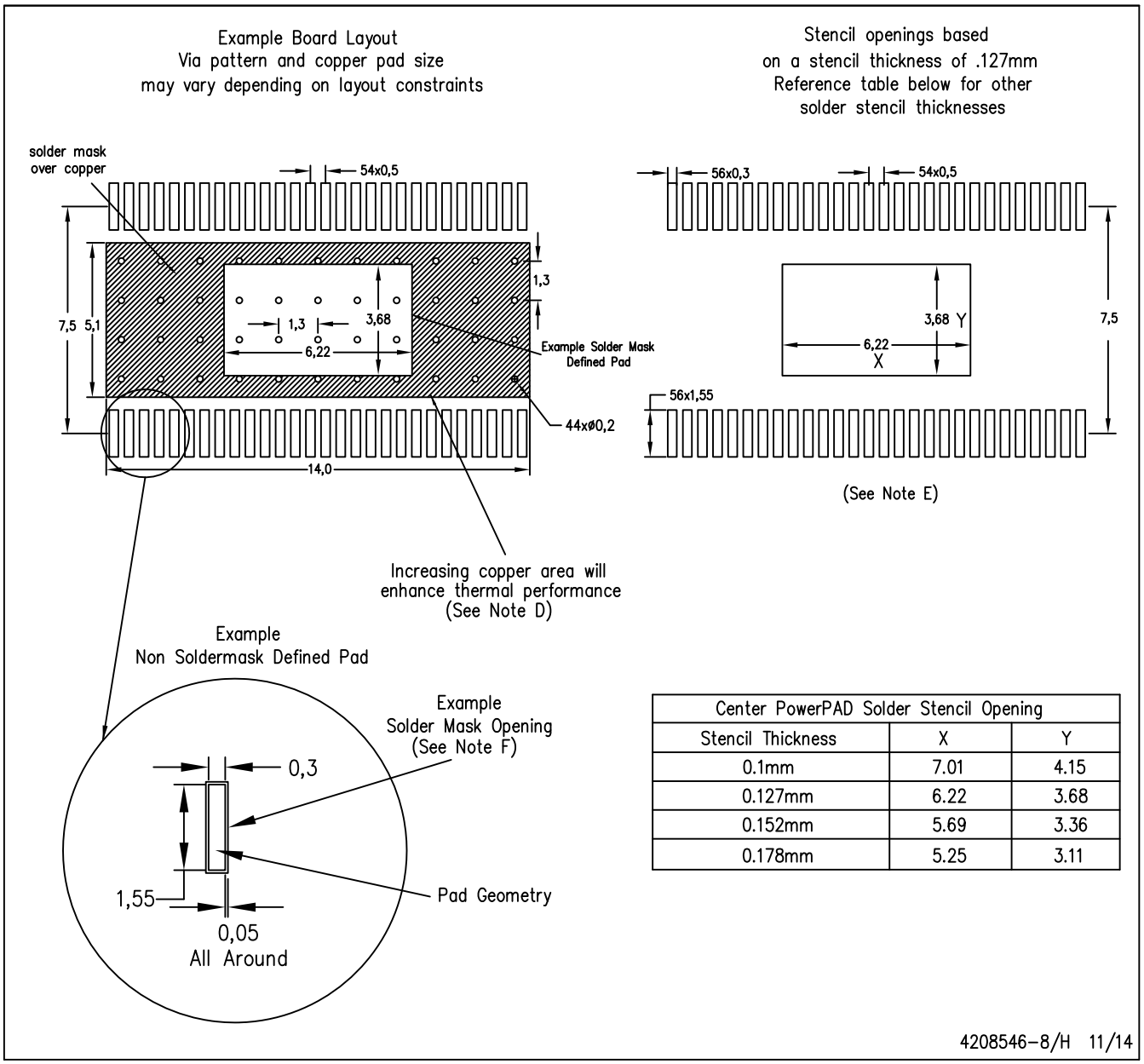


| Center PowerPAD Solder Stencil Opening | | |
|---|---|---|
| Stencil Thickness | X | Y |
| 0.1mm | 7.01 | 4.15 |
| 0.127mm | 6.22 | 3.68 |
| 0.152mm | 5.69 | 3.36 |
| 0.178mm | 5.25 | 3.11 |

NOTES:
A. All linear dimensions are in millimeters.
B. This drawing is subject to change without notice.
C. Customers should place a note on the circuit board fabrication drawing not to alter the center solder mask defined pad.
D. This package is designed to be soldered to a thermal pad on the board. Refer to Technical Brief, PowerPad Thermally Enhanced Package, Texas Instruments Literature No. SLMA002, SLMA004, and also the Product Data Sheets for specific thermal information, via requirements, and recommended board layout. These documents are available at www.ti.com <http://www.ti.com>. Publication IPC–7351 is recommended for alternate designs.
E. Laser cutting apertures with trapezoidal walls and also rounding corners will offer better paste release. Customers should contact their board assembly site for stencil design recommendations. Example stencil design based on a 50% volumetric metal load solder paste. Refer to IPC–7525 for other stencil recommendations.
F. Customers should contact their board fabrication site for solder mask tolerances between and around signal pads.

# IMPORTANT NOTICE AND DISCLAIMER

TI PROVIDES TECHNICAL AND RELIABILITY DATA (INCLUDING DATA SHEETS), DESIGN RESOURCES (INCLUDING REFERENCE DESIGNS), APPLICATION OR OTHER DESIGN ADVICE, WEB TOOLS, SAFETY INFORMATION, AND OTHER RESOURCES “AS IS” AND WITH ALL FAULTS, AND DISCLAIMS ALL WARRANTIES, EXPRESS AND IMPLIED, INCLUDING WITHOUT LIMITATION ANY IMPLIED WARRANTIES OF MERCHANTABILITY, FITNESS FOR A PARTICULAR PURPOSE OR NON-INFRINGEMENT OF THIRD PARTY INTELLECTUAL PROPERTY RIGHTS.

These resources are intended for skilled developers designing with TI products. You are solely responsible for (1) selecting the appropriate TI products for your application, (2) designing, validating and testing your application, and (3) ensuring your application meets applicable standards, and any other safety, security, regulatory or other requirements.

These resources are subject to change without notice. TI grants you permission to use these resources only for development of an application that uses the TI products described in the resource. Other reproduction and display of these resources is prohibited. No license is granted to any other TI intellectual property right or to any third party intellectual property right. TI disclaims responsibility for, and you will fully indemnify TI and its representatives against, any claims, damages, costs, losses, and liabilities arising out of your use of these resources.

TI’s products are provided subject to TI’s Terms of Sale or other applicable terms available either on ti.com or provided in conjunction with such TI products. TI’s provision of these resources does not expand or otherwise alter TI’s applicable warranties or warranty disclaimers for TI products.

TI objects to and rejects any additional or different terms you may have proposed.

Mailing Address: Texas Instruments, Post Office Box 655303, Dallas, Texas 75265
Copyright © 2025, Texas Instruments Incorporated