SNx4HCT574 Octal Edge-Triggered D-Type Flip-Flips With 3-State Outputs

1 Features

- Operating voltage range of 4.5V to 5.5V
- High-current 3-state noninverting outputs drive bus lines directly or up to 15 LSTTL loads
- Low power consumption, 80μA max I_{CC}
- Typical t_{pd} = 22ns
- ±6mA output drive at 5V
- Low input current of 1μA max
- Inputs are TTL-voltage compatible
- Bus-structured pinout

2 Description

These octal edge-triggered D-type flip-flops feature 3-state outputs designed specifically for bus driving. The 'HCT574 devices are particularly suitable for implementing buffer registers, I/O ports, bidirectional bus drivers, and working registers.

Device Information

PART NUMBER	PACKAGE(1)	PACKAGE SIZE(2)	BODY SIZE(3)
SN74HCT574	DGS (VSSOP, 20)	5.1mm × 4.9mm	5.1mm × 3mm
	DW (SOIC, 20)	12.80mm x 10.3mm	12.80mm x 7.50mm
	DB (SSOP, 20)	7.2mm x 7.8mm	7.2mm x 5.30mm
	PDIP (20)	24.33mm × 9.4mm	24.33mm × 6.35mm
	NS (SOP, 20)	12.6mm x 7.8mm	12.6mm x 5.3mm
	PW (TSSOP, 20)	6.50mm x 6.4mm	6.50mm x 4.40mm

(1) For more information, see Section 11.
(2) The package size (length × width) is a nominal value and includes pins, where applicable.
(3) The body size (length × width) is a nominal value and does not include pins.

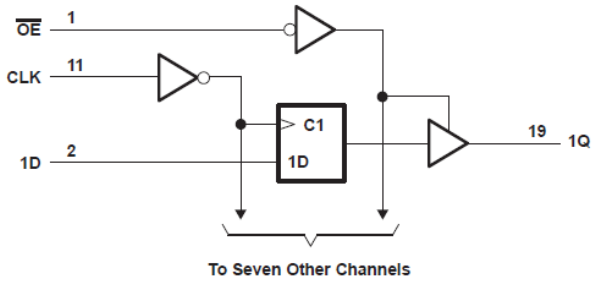

Logic Diagram (Positive Logic)

An IMPORTANT NOTICE at the end of this data sheet addresses availability, warranty, changes, use in safety-critical applications, intellectual property matters and other important disclaimers. PRODUCTION DATA.

Table of Contents

1 Features....1
2 Description....1
3 Pin Configuration and Functions....3
4 Specifications....4
4.1 Absolute Maximum Ratings....4
4.2 Recommended Operating Conditions....4
4.3 Thermal Information....4
4.4 Electrical Characteristics....5
4.5 Timing Requirements....5
4.6 Switching Characteristics, C_L = 50 pF....5
4.7 Switching Characteristics, C_L = 150 pF....6
4.8 Operating Characteristics....6
5 Parameter Measurement Information....7
6 Detailed Description....8
6.1 Overview....8
6.2 Functional Block Diagram....8
6.3 Device Functional Modes....8
7 Application and Implementation....9
7.1 Power Supply Recommendations....9
7.2 Layout....9
8 Device and Documentation Support....10
8.1 Receiving Notification of Documentation Updates....10
8.2 Support Resources....10
8.3 Trademarks....10
8.4 Electrostatic Discharge Caution....10
8.5 Glossary....10
9 Revision History....10
10 Mechanical, Packaging, and Orderable Information....10

Copyright © 2024 Texas Instruments Incorporated

3 Pin Configuration and Functions

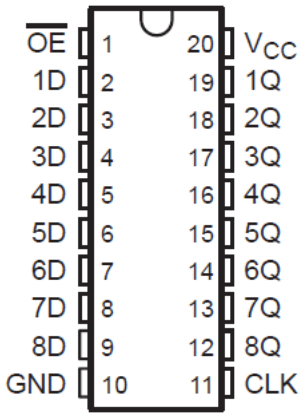

DB, DGS, DW, N, NS, or PW package
20-Pin SSOP, SOIC, PDIP, SO, TSSOP
Top View

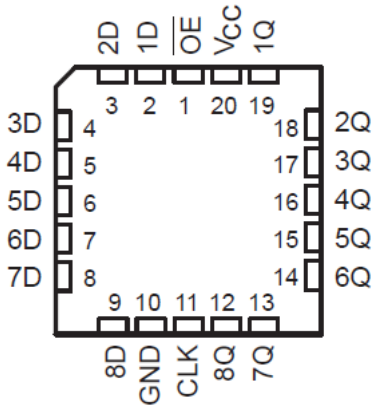

FK Package
20-Pin LCCC
Top View

Table 3-1. Pin Functions

NAME[(1)]	PIN	TYPE	DESCRIPTION
1OE	1	I	Output enable 1
1A1	2	I	1A1 input
2Y4	3	O	2Y4 output
1A2	4	I	1A2 input
2Y3	5	O	2Y3 output
1A3	6	I	1A3 input
2Y2	7	O	2Y2 output
1A4	8	I	1A4 input
2Y1	9	O	2Y1 output
GND	10	—	Ground pin
2A1	11	I	2A1 input
1Y4	12	O	1Y4 output
2A2	13	I	2A2 input
1Y3	14	O	1Y3 output
2A3	15	I	2A3 input
1Y2	16	O	1Y2 output
2A4	17	I	2A4 input
1Y1	18	O	1Y1 output
2OE	19	I	Output enable 2
VCC	20	—	Power pin

(1) I = input, O = output, P = power, FB = feedback, GND = ground, N/A = not applicable

Copyright © 2024 Texas Instruments Incorporated

4 Specifications

4.1 Absolute Maximum Ratings

over operating free-air temperature range (unless otherwise noted)[1]

			MIN	MAX	UNIT
V_{CC}	Supply voltage range		–0.5	7	V
I_{IK}	Input clamp current[2]	$V_I < 0$ or $V_I > V_{CC}$		±20	mA
I_{OK}	Output clamp current[2]	$V_O < 0$ or $V_O > V_{CC}$		±20	mA
I_O	Continuous output current	$V_O = 0$ to V_{CC}		±35	mA
	Continuous current through V_{CC} or GND			±70	mA
T_J	Junction temperature			150	℃
T_{stg}	Storage temperature range		–65	150	℃

(1) Stresses beyond those listed under “absolute maximum ratings” may cause permanent damage to the device. These are stress ratings only, and functional operation of the device at these or any other conditions beyond those indicated under “recommended" operating conditions" is not implied. Exposure to absolute-maximum-rated conditions for extended periods may affect device reliability.
(2) The input and output voltage ratings may be exceeded if the input and output current ratings are observed.

4.2 Recommended Operating Conditions

over operating free-air temperature range (unless otherwise noted)[1]

			SN54HCT574			SN74HCT574			UNIT
			MIN	NOM	MAX	MIN	NOM	MAX	
V_{CC}	Supply voltage		4.5	5	5.5	4.5	5	5.5	V
V_{IH}	High-level input voltage	V_{CC} = 4.5 V to 5.5 V	2			2			V
V_{IL}	Low-level input voltage	V_{CC} = 4.5 V to 5.5 V			0.8			0.8	V
V_I	Input voltage		0		V_{CC}	0		V_{CC}	V
V_O	Output voltage		0		V_{CC}	0		V_{CC}	V
Δt/Δv	Input transition rise/fall time				500			500	ns
T_A	Operating free-air temperature		−55		125	−40		85	°C

(1) All unused inputs of the device must be held at V_{CC} or GND to ensure proper device operation. Refer to the TI application report, *Implications of Slow or Floating CMOS Inputs*, literature number SCBA004.

4.3 Thermal Information

THERMAL METRIC		DGS (VSSOP) 20 PINS	DW (SOIC) 20 PINS	DB (SSOP) 20 PINS	N (PDIP) 20 PINS	NS (SO) 20 PINS	PW (TSSOP) 20 PINS	UNIT
$R_{\theta JA}$	Junction-to-ambient thermal resistance[1]	130.6	109.1	122.7	84.6	113.4	131.8	°C/W
$R_{\theta JC(top)}$	Junction-to-case (top) thermal resistance	68.7	76	81.6	72.5	78.6	72.2	°C/W
$R_{\theta JB}$	Junction-to-board thermal resistance	85.4	77.6	77.5	65.3	78.4	82.8	°C/W
ψ_{JT}	Junction-to-top characterization parameter	10.5	51.5	46.1	55.3	47.1	21.5	°C/W
ψ_{JB}	Junction-to-board characterization parameter	85.0	77.1	77.1	65.2	78.1	82.4	°C/W
$R_{\theta JC(bot)}$	Junction-to-case (bottom) thermal resistance	N/A	N/A	N/A	N/A	N/A	N/A	°C/W

(1) For more information about traditional and new thermal metrics, see the *Semiconductor and IC package thermal metrics* application report.

Copyright © 2024 Texas Instruments Incorporated

4.4 Electrical Characteristics

over recommended operating free-air temperature range (unless otherwise noted)

PARAMETER	TEST CONDITIONS		V_{CC}	T_A = 25°C			SN54HCT574		SN74HCT574		UNIT
				MIN	TYP	MAX	MIN	MAX	MIN	MAX	
V_{OH}	$V_I = V_{IH}$ or V_{IL}	I_{OH} = −20 µA	4.5 V	4.4	4.499		4.4		4.4		V
		I_{OH} = −6 mA		3.98	4.3		3.7		3.84		
V_{OL}	$V_I = V_{IH}$ or V_{IL}	I_{OL} = 20 µA	4.5 V		0.001	0.1		0.1		0.1	V
		I_{OL} = 6 mA			0.17	0.26		0.4		0.33	
I_I	$V_I = V_{CC}$ or 0		5.5 V		±0.1	±100		±1000		±1000	nA
I_{OZ}	$V_O = V_{CC}$ or 0		5.5 V		±0.01	±0.5		±10		±5	µA
I_{CC}	$V_I = V_{CC}$ or 0,	I_O = 0	5.5 V			8		160		80	µA
ΔI_{CC} (1)	One input at 0.5 V or 2.4 V, Other inputs at 0 or V_{CC}		5.5 V		1.4	2.4		3		2.9	mA
C_i			4.5 V to 5.5 V		3	10		10		10	pF

(1) This is the increase in supply current for each input that is at one of the specified TTL voltage levels rather than 0 V or V_{CC}.

4.5 Timing Requirements

over recommended operating free-air temperature range (unless otherwise noted)

		V_{CC}	T_A = 25°C		SN54HCT574		SN74HCT574		UNIT
			MIN	MAX	MIN	MAX	MIN	MAX	
f_{clock}	Clock frequency	4.5 V		30		20		24	MHz
		5.5 V		33		22		27	
t_w	Pulse duration, CLK high or low	4.5 V	16		24		20		ns
		5.5 V	14		22		18		
t_{su}	Setup time, data before CLK↑	4.5 V	20		30		25		ns
		5.5 V	17		27		23		
t_h	Hold time, data after CLK↑	4.5 V	5		5		5		ns
		5.5 V	5		5		5		

4.6 Switching Characteristics, C_L = 50 pF

over recommended operating free-air temperature range, C_L = 50 pF (unless otherwise noted) (see Load Circuit and Voltage Waveforms)

PARAMETER	FROM (INPUT)	TO (OUTPUT)	V_{CC}	T_A = 25°C			SN54HCT574		SN74HCT574		UNIT
				MIN	TYP	MAX	MIN	MAX	MIN	MAX	
f_{max}			4.5 V	30	36		20		24		MHz
			5.5 V	33	40		22		27		
t_{pd}	CLK	Any Q	4.5 V		30	36		54		45	ns
			5.5 V		25	32		48		41	
t_{en}	$\overline{OE}$	Any Q	4.5 V		26	30		45		38	ns
			5.5 V		23	27		41		34	
t_{dis}	$\overline{OE}$	Any Q	4.5 V		23	30		45		38	ns
			5.5 V		22	27		41		34	
t_t		Any Q	4.5 V		10	12		18		15	ns
			5.5 V		9	11		16		14	

Copyright © 2024 Texas Instruments Incorporated

4.7 Switching Characteristics, C_L = 150 pF

over recommended operating free-air temperature range, C_L = 150 pF (unless otherwise noted) (see Load Circuit and Voltage Waveforms)

PARAMETER	FROM (INPUT)	TO (OUTPUT)	V_{CC}	T_A = 25°C			SN54HCT574		SN74HCT574		UNIT
				MIN	TYP	MAX	MIN	MAX	MIN	MAX	
f_{max}			4.5 V	30	36		20		24		MHz
			5.5 V	33	40		22		27		
t_{pd}	CLK	Any Q	4.5 V		40	53		80		66	ns
			5.5 V		35	47		71		60	
t_{en}	$\overline{OE}$	Any Q	4.5 V		34	47		71		59	ns
			5.5 V		29	39		94		78	
t_t		Any Q	4.5 V		18	42		63		53	ns
			5.5 V		16	38		57		48	

4.8 Operating Characteristics

T_A = 25°C

PARAMETER		TEST CONDITIONS	TYP	UNIT
C_{pd}	Power dissipation capacitance per flip-flop	No load	93	pF

Copyright © 2024 Texas Instruments Incorporated

5 Parameter Measurement Information

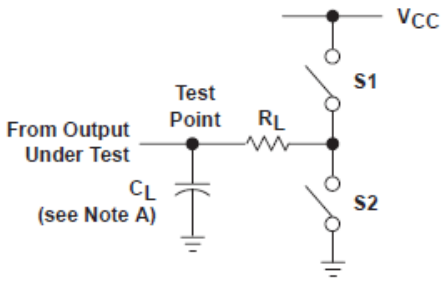

LOAD CIRCUIT

PARAMETER		R_L	C_L	S1	S2
t_{en}	t_{PZH}	1 kΩ	50 pF or 150 pF	Open	Closed
	t_{PZL}			Closed	Open
t_{dis}	t_{PHZ}	1 kΩ	50 pF	Open	Closed
	t_{PLZ}			Closed	Open
t_{pd} or t_t		--	50 pF or 150 pF	Open	Open

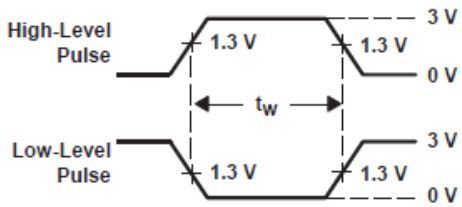

VOLTAGE WAVEFORMS
PULSE DURATIONS

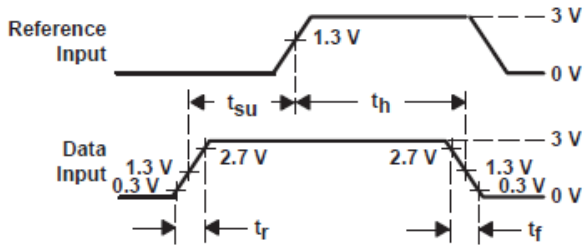

VOLTAGE WAVEFORMS
SETUP AND HOLD AND INPUT RISE AND FALL TIMES

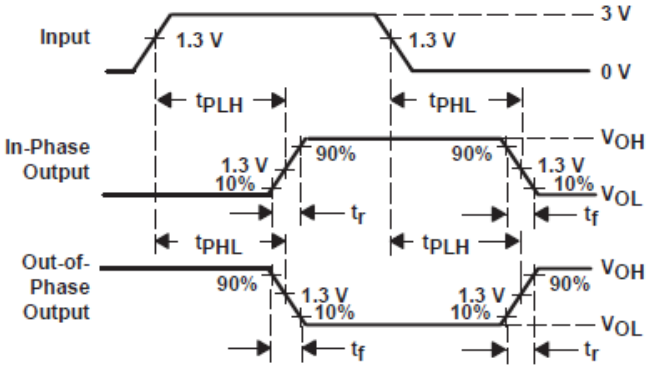

VOLTAGE WAVEFORMS
PROPAGATION DELAY AND OUTPUT RISE AND FALL TIMES

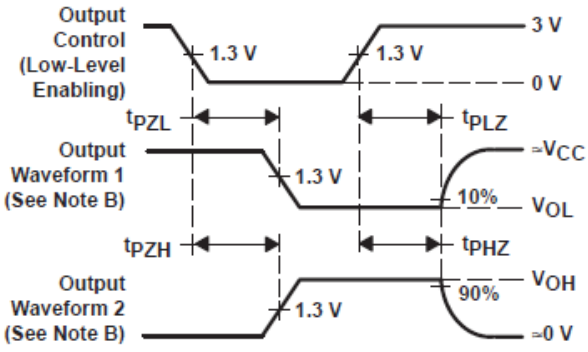

VOLTAGE WAVEFORMS
ENABLE AND DISABLE TIMES FOR 3-STATE OUTPUTS

A. C_L includes probe and test-fixture capacitance.
B. Waveform 1 is for an output with internal conditions such that the output is low except when disabled by the output control. Waveform 2 is for an output with internal conditions such that the output is high except when disabled by the output control.
C. Phase relationships between waveforms were chosen arbitrarily. All input pulses are supplied by generators having the following characteristics: PRR ≤ 1 MHz, Z_O = 50 Ω, t_r = 6 ns, t_f = 6 ns.
D. For clock inputs, fmaxis measured when the input duty cycle is 50%.
E. The outputs are measured one at a time with one input transition per measurement.
F. t_{PLZ} and t_{PHZ} are the same as t_{dis}.
G. t_{PZL} and t_{PZH} are the same as t_{en}.
H. t_{PLH} and t_{PHL} are the same as t_{pd}.

Figure 5-1. Load Circuit and Voltage Waveforms

6 Detailed Description

6.1 Overview

These octal edge-triggered D-type flip-flops feature 3-state outputs designed specifically for bus driving. The ’HCT574 devices are particularly suitable for implementing buffer registers, I/O ports, bidirectional bus drivers, and working registers.

The eight flip-flops enter data on the low-to-high transition of the clock (CLK) input.

A buffered output-enable ($\overline{OE}$) input can be used to place the eight outputs in either a normal logic state (high or low logic levels) or the high-impedance state. In the high-impedance state, the outputs neither load nor drive the bus lines significantly. The high-impedance state and increased drive provide the capability to drive bus lines without interface or pullup components.

$\overline{OE}$ does not affect the internal operations of the flip-flops. Old data can be retained or new data can be entered while the outputs are in the high-impedance state.

6.2 Functional Block Diagram

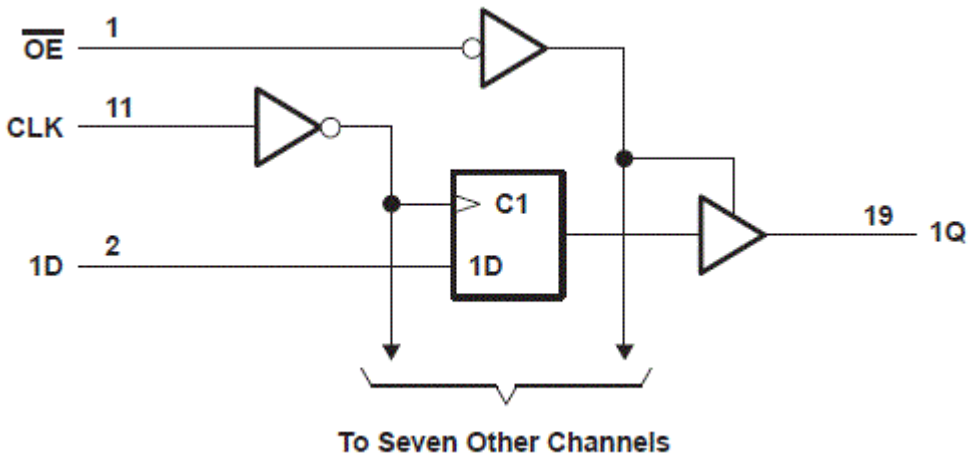

6.3 Device Functional Modes

Table 6-1. Function Table (Each Flip-Flop)

INPUTS			OUTPUT Q
$\overline{OE}$	CLK	D	
L	↑	H	H
L	↑	L	L
L	H or L	X	Q_0
H	X	X	Z

Copyright © 2024 Texas Instruments Incorporated

7 Application and Implementation

Note

Information in the following applications sections is not part of the TI component specification, and TI does not warrant its accuracy or completeness. TI's customers are responsible for determining suitability of components for their purposes, as well as validating and testing their design implementation to confirm system functionality.

7.1 Power Supply Recommendations

The power supply can be any voltage between the minimum and maximum supply voltage rating located in the *Recommended Operating Conditions*. Each V_{CC} terminal should have a good bypass capacitor to prevent power disturbance. A 0.1µF capacitor is recommended for this device. It is acceptable to parallel multiple bypass capacitors to reject different frequencies of noise. The 0.1µF and 1µF capacitors are commonly used in parallel. The bypass capacitor should be installed as close to the power terminal as possible for best results.

7.2 Layout

7.2.1 Layout Guidelines

When using multiple-input and multiple-channel logic devices, inputs must never be left floating. In many cases, functions or parts of functions of digital logic devices are unused; for example, when only two inputs of a triple-input AND gate are used or only 3 of the 4 buffer gates are used. Such unused input pins must not be left unconnected because the undefined voltages at the outside connections result in undefined operational states. All unused inputs of digital logic devices must be connected to a logic high or logic low voltage, as defined by the input voltage specifications, to prevent them from floating. The logic level that must be applied to any particular unused input depends on the function of the device. Generally, the inputs are tied to GND or V_{CC}, whichever makes more sense for the logic function or is more convenient.

Copyright © 2024 Texas Instruments Incorporated

8 Device and Documentation Support

TI offers an extensive line of development tools. Tools and software to evaluate the performance of the device, generate code, and develop solutions are listed below.

8.1 Receiving Notification of Documentation Updates

To receive notification of documentation updates, navigate to the device product folder on ti.com. Click on *Notifications* to register and receive a weekly digest of any product information that has changed. For change details, review the revision history included in any revised document.

8.2 Support Resources

TI E2E™ support forums are an engineer's go-to source for fast, verified answers and design help — straight from the experts. Search existing answers or ask your own question to get the quick design help you need.

Linked content is provided "AS IS" by the respective contributors. They do not constitute TI specifications and do not necessarily reflect TI's views; see TI's Terms of Use.

8.3 Trademarks

TI E2E™ is a trademark of Texas Instruments.
All trademarks are the property of their respective owners.

8.4 Electrostatic Discharge Caution

This integrated circuit can be damaged by ESD. Texas Instruments recommends that all integrated circuits be handled with appropriate precautions. Failure to observe proper handling and installation procedures can cause damage.

ESD damage can range from subtle performance degradation to complete device failure. Precision integrated circuits may be more susceptible to damage because very small parametric changes could cause the device not to meet its published specifications.

8.5 Glossary

TI Glossary	This glossary lists and explains terms, acronyms, and definitions.

9 Revision History

NOTE: Page numbers for previous revisions may differ from page numbers in the current version.

Changes from Revision G (July 2022) to Revision H (August 2024)	Page
• Added DGS package to *Device Information* table, *Pin Configuration and Functions* section, and *Thermal Information* table	1
• Added package size to *Device Information* table	1
• Added *Application and Implementation* section	9

Changes from Revision F (January 2022) to Revision G (July 2022)	Page
• Junction-to-ambient thermal resistance values increased. DW was 58 is now 109.1, DB was 70 is now 122.7, N was 69 is now 84.6, NS was 60 is now 113.4, PW was 83 is now 131.8	4

10 Mechanical, Packaging, and Orderable Information

The following pages include mechanical, packaging, and orderable information. This information is the most current data available for the designated devices. This data is subject to change without notice and revision of this document. For browser-based versions of this data sheet, refer to the left-hand navigation.

Copyright © 2024 Texas Instruments Incorporated

PACKAGING INFORMATION

Orderable part number	Status (1)	Material type (2)	Package | Pins	Package qty | Carrier	RoHS (3)	Lead finish/ Ball material (4)	MSL rating/ Peak reflow (5)	Op temp (°C)	Part marking (6)
SN74HCT574DBR	Active	Production	SSOP (DB) | 20	2000 | LARGE T&R	Yes	NIPDAU	Level-1-260C-UNLIM	-40 to 85	HT574
SN74HCT574DBR.A	Active	Production	SSOP (DB) | 20	2000 | LARGE T&R	Yes	NIPDAU	Level-1-260C-UNLIM	-40 to 85	HT574
SN74HCT574DGSR	Active	Production	VSSOP (DGS) | 20	5000 | LARGE T&R	Yes	NIPDAU	Level-1-260C-UNLIM	-40 to 125	HT574
SN74HCT574DGSR.A	Active	Production	VSSOP (DGS) | 20	5000 | LARGE T&R	Yes	NIPDAU	Level-1-260C-UNLIM	-40 to 125	HT574
SN74HCT574DW	Obsolete	Production	SOIC (DW) | 20	-	-	Call TI	Call TI	-40 to 85	HCT574
SN74HCT574DWR	Active	Production	SOIC (DW) | 20	2000 | LARGE T&R	Yes	NIPDAU	Level-1-260C-UNLIM	-40 to 85	HCT574
SN74HCT574DWR.A	Active	Production	SOIC (DW) | 20	2000 | LARGE T&R	Yes	NIPDAU	Level-1-260C-UNLIM	-40 to 85	HCT574
SN74HCT574DWRG4	Active	Production	SOIC (DW) | 20	2000 | LARGE T&R	Yes	NIPDAU	Level-1-260C-UNLIM	-40 to 85	HCT574
SN74HCT574N	Active	Production	PDIP (N) | 20	20 | TUBE	Yes	NIPDAU	N/A for Pkg Type	-40 to 85	SN74HCT574N
SN74HCT574N.A	Active	Production	PDIP (N) | 20	20 | TUBE	Yes	NIPDAU	N/A for Pkg Type	-40 to 85	SN74HCT574N
SN74HCT574NE4	Active	Production	PDIP (N) | 20	20 | TUBE	Yes	NIPDAU	N/A for Pkg Type	-40 to 85	SN74HCT574N
SN74HCT574NSR	Active	Production	SOP (NS) | 20	2000 | LARGE T&R	Yes	NIPDAU | NIPDAU	Level-1-260C-UNLIM	-40 to 85	HCT574
SN74HCT574NSR.A	Active	Production	SOP (NS) | 20	2000 | LARGE T&R	Yes	NIPDAU	Level-1-260C-UNLIM	-40 to 85	HCT574
SN74HCT574PW	Obsolete	Production	TSSOP (PW) | 20	-	-	Call TI	Call TI	-40 to 85	HT574
SN74HCT574PWR	Active	Production	TSSOP (PW) | 20	2000 | LARGE T&R	Yes	NIPDAU | NIPDAU	Level-1-260C-UNLIM	-40 to 85	HT574
SN74HCT574PWR.A	Active	Production	TSSOP (PW) | 20	2000 | LARGE T&R	Yes	NIPDAU	Level-1-260C-UNLIM	-40 to 85	HT574
SN74HCT574PWT	Obsolete	Production	TSSOP (PW) | 20	-	-	Call TI	Call TI	-40 to 85	HT574

(1) **Status:** For more details on status, see our product life cycle.

(2) **Material type:** When designated, preproduction parts are prototypes/experimental devices, and are not yet approved or released for full production. Testing and final process, including without limitation quality assurance, reliability performance testing, and/or process qualification, may not yet be complete, and this item is subject to further changes or possible discontinuation. If available for ordering, purchases will be subject to an additional waiver at checkout, and are intended for early internal evaluation purposes only. These items are sold without warranties of any kind.

(3) **RoHS values:** Yes, No, RoHS Exempt. See the TI RoHS Statement for additional information and value definition.

(4) **Lead finish/Ball material:** Parts may have multiple material finish options. Finish options are separated by a vertical ruled line. Lead finish/Ball material values may wrap to two lines if the finish value exceeds the maximum column width.

(5) **MSL rating/Peak reflow:** The moisture sensitivity level ratings and peak solder (reflow) temperatures. In the event that a part has multiple moisture sensitivity ratings, only the lowest level per JEDEC standards is shown. Refer to the shipping label for the actual reflow temperature that will be used to mount the part to the printed circuit board.

(6) **Part marking:** There may be an additional marking, which relates to the logo, the lot trace code information, or the environmental category of the part.

Multiple part markings will be inside parentheses. Only one part marking contained in parentheses and separated by a "~" will appear on a part. If a line is indented then it is a continuation of the previous line and the two combined represent the entire part marking for that device.

Important Information and Disclaimer: The information provided on this page represents TI's knowledge and belief as of the date that it is provided. TI bases its knowledge and belief on information provided by third parties, and makes no representation or warranty as to the accuracy of such information. Efforts are underway to better integrate information from third parties. TI has taken and continues to take reasonable steps to provide representative and accurate information but may not have conducted destructive testing or chemical analysis on incoming materials and chemicals. TI and TI suppliers consider certain information to be proprietary, and thus CAS numbers and other limited information may not be available for release.

In no event shall TI's liability arising out of such information exceed the total purchase price of the TI part(s) at issue in this document sold by TI to Customer on an annual basis.

TAPE AND REEL INFORMATION

REEL DIMENSIONS

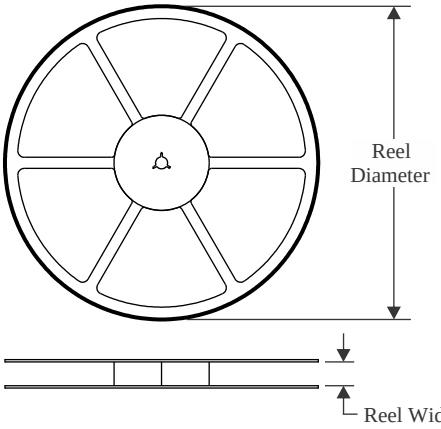

TAPE DIMENSIONS

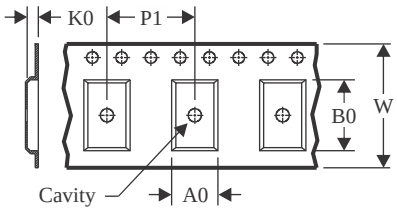

A0	Dimension designed to accommodate the component width
B0	Dimension designed to accommodate the component length
K0	Dimension designed to accommodate the component thickness
W	Overall width of the carrier tape
P1	Pitch between successive cavity centers

QUADRANT ASSIGNMENTS FOR PIN 1 ORIENTATION IN TAPE

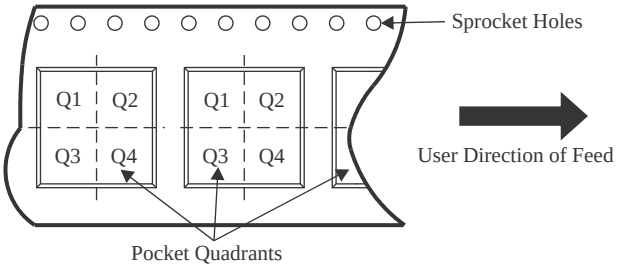

*All dimensions are nominal

Device	Package Type	Package Drawing	Pins	SPQ	Reel Diameter (mm)	Reel Width W1 (mm)	A0 (mm)	B0 (mm)	K0 (mm)	P1 (mm)	W (mm)	Pin1 Quadrant
SN74HCT574DBR	SSOP	DB	20	2000	330.0	16.4	8.2	7.5	2.5	12.0	16.0	Q1
SN74HCT574DGSR	VSSOP	DGS	20	5000	330.0	16.4	5.4	5.4	1.45	8.0	16.0	Q1
SN74HCT574DWR	SOIC	DW	20	2000	330.0	24.4	10.9	13.3	2.7	12.0	24.0	Q1
SN74HCT574DWR	SOIC	DW	20	2000	330.0	24.4	10.9	13.3	2.7	12.0	24.0	Q1
SN74HCT574NSR	SOP	NS	20	2000	330.0	24.4	8.4	13.0	2.5	12.0	24.0	Q1
SN74HCT574PWR	TSSOP	PW	20	2000	330.0	16.4	6.95	7.0	1.4	8.0	16.0	Q1

TAPE AND REEL BOX DIMENSIONS

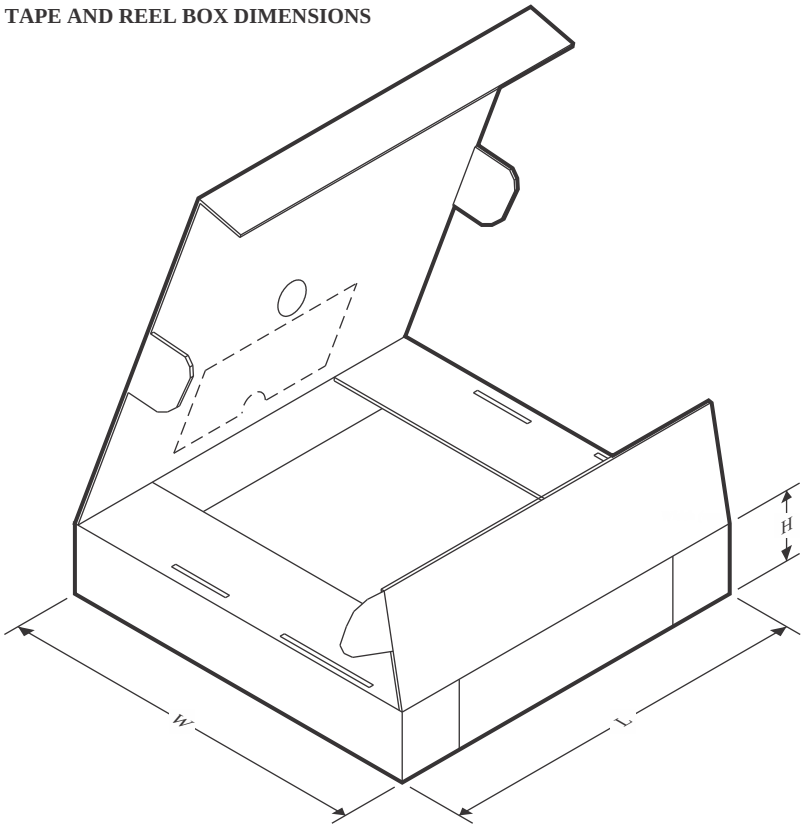

*All dimensions are nominal

Device	Package Type	Package Drawing	Pins	SPQ	Length (mm)	Width (mm)	Height (mm)
SN74HCT574DBR	SSOP	DB	20	2000	356.0	356.0	35.0
SN74HCT574DGSR	VSSOP	DGS	20	5000	353.0	353.0	32.0
SN74HCT574DWR	SOIC	DW	20	2000	367.0	367.0	45.0
SN74HCT574DWR	SOIC	DW	20	2000	356.0	356.0	41.0
SN74HCT574NSR	SOP	NS	20	2000	367.0	367.0	45.0
SN74HCT574PWR	TSSOP	PW	20	2000	356.0	356.0	35.0

TUBE

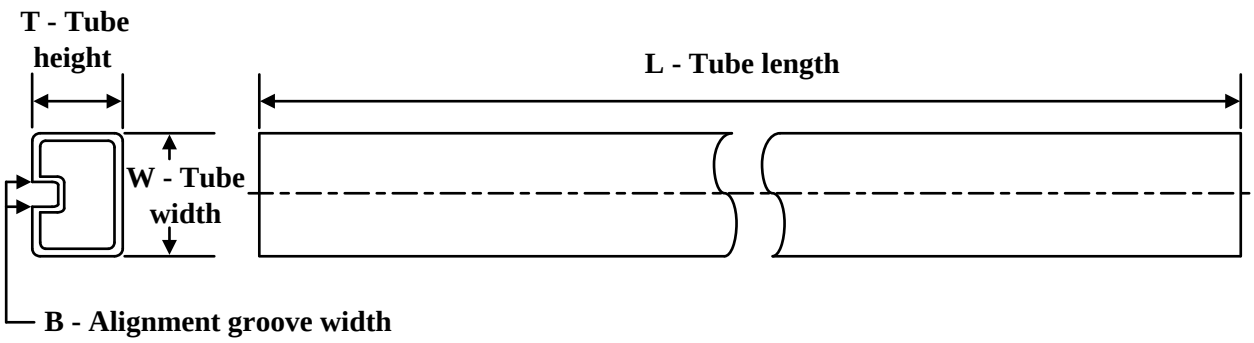

*All dimensions are nominal

Device	Package Name	Package Type	Pins	SPQ	L (mm)	W (mm)	T (µm)	B (mm)
SN74HCT574N	N	PDIP	20	20	506	13.97	11230	4.32
SN74HCT574N.A	N	PDIP	20	20	506	13.97	11230	4.32
SN74HCT574NE4	N	PDIP	20	20	506	13.97	11230	4.32

N (R–PDIP–T**) PLASTIC DUAL–IN–LINE PACKAGE

16 PINS SHOWN

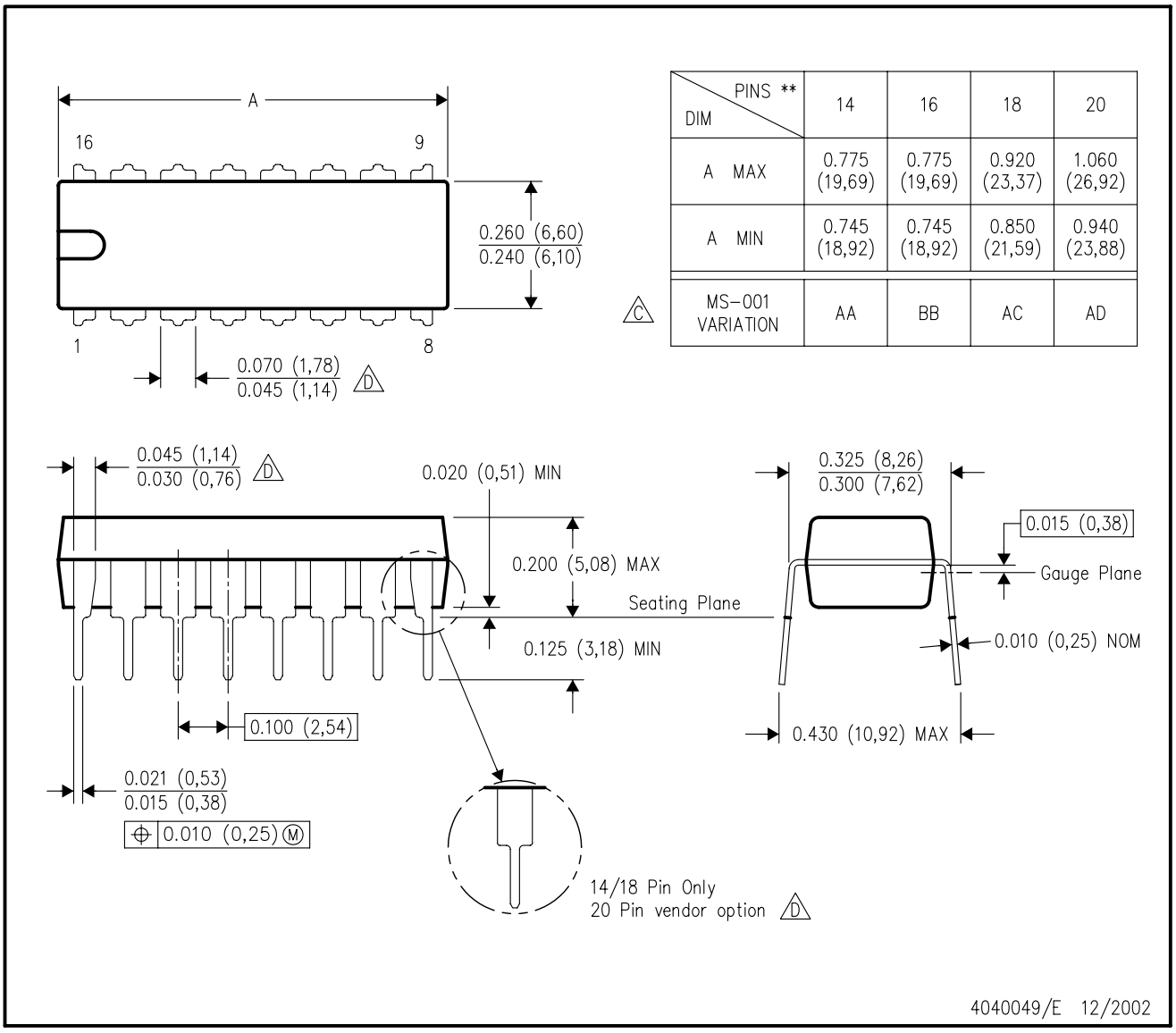

DIM \ PINS **	14	16	18	20
A MAX	0.775 (19,69)	0.775 (19,69)	0.920 (23,37)	1.060 (26,92)
A MIN	0.745 (18,92)	0.745 (18,92)	0.850 (21,59)	0.940 (23,88)
MS–001 VARIATION (C)	AA	BB	AC	AD

NOTES:
A. All linear dimensions are in inches (millimeters).
B. This drawing is subject to change without notice.
C. Falls within JEDEC MS–001, except 18 and 20 pin minimum body length (Dim A).
D. The 20 pin end lead shoulder width is a vendor option, either half or full width.

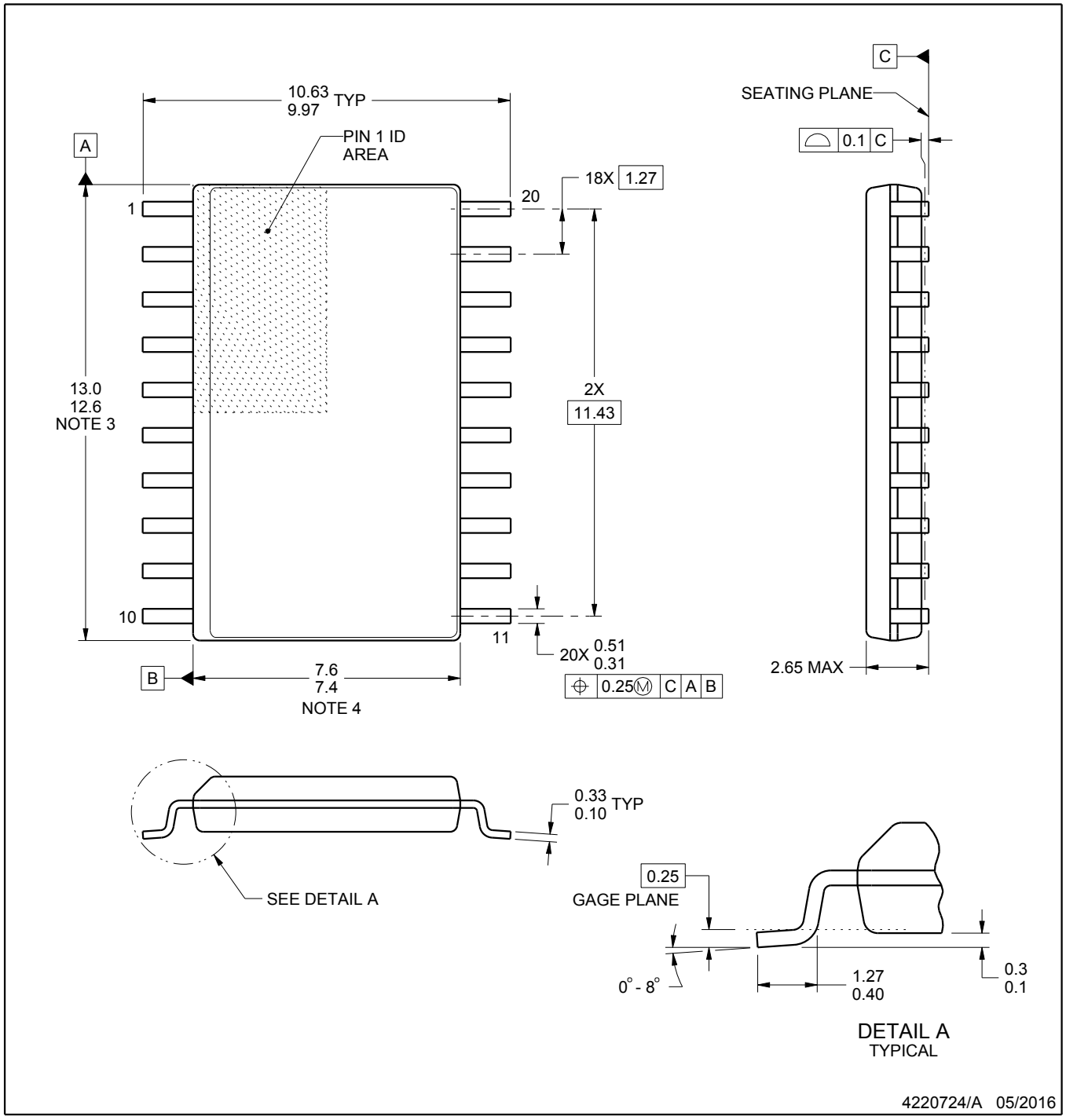

NOTES:

1. All linear dimensions are in millimeters. Dimensions in parenthesis are for reference only. Dimensioning and tolerancing per ASME Y14.5M.
2. This drawing is subject to change without notice.
3. This dimension does not include mold flash, protrusions, or gate burrs. Mold flash, protrusions, or gate burrs shall not exceed 0.15 mm per side.
4. This dimension does not include interlead flash. Interlead flash shall not exceed 0.43 mm per side.
5. Reference JEDEC registration MS-013.

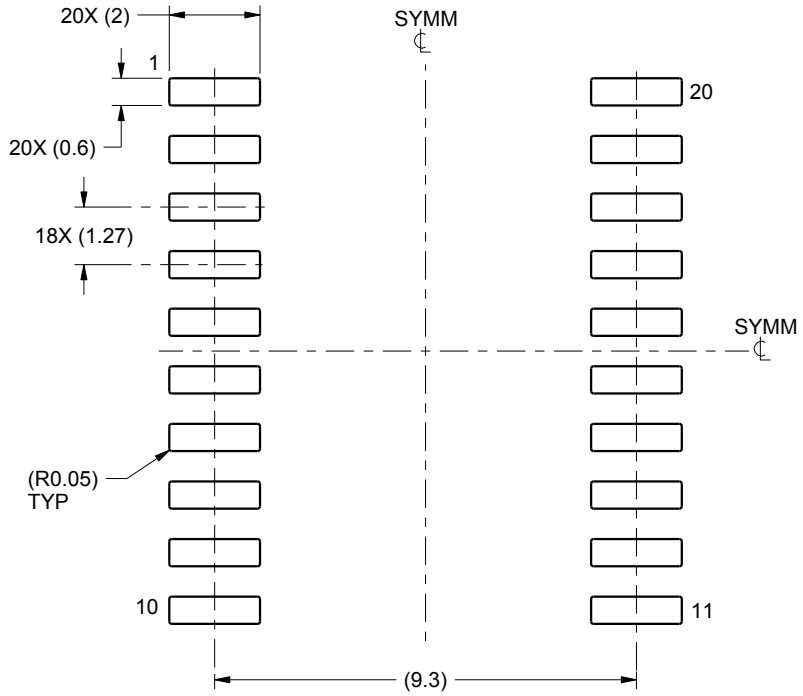

LAND PATTERN EXAMPLE
SCALE:6X

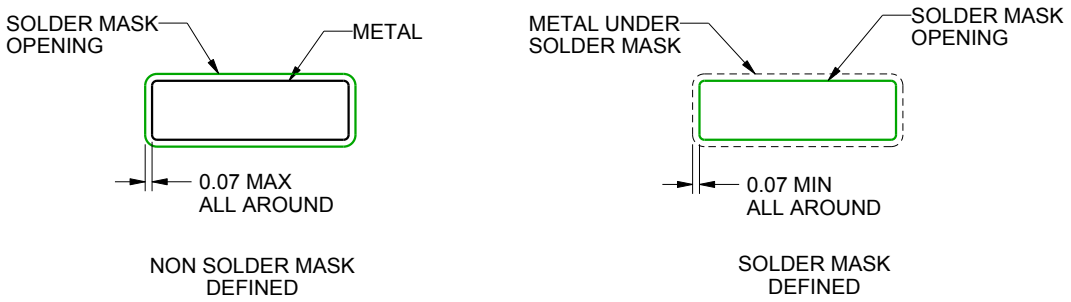

SOLDER MASK DETAILS

4220724/A 05/2016

NOTES: (continued)

6. Publication IPC-7351 may have alternate designs.
7. Solder mask tolerances between and around signal pads can vary based on board fabrication site.

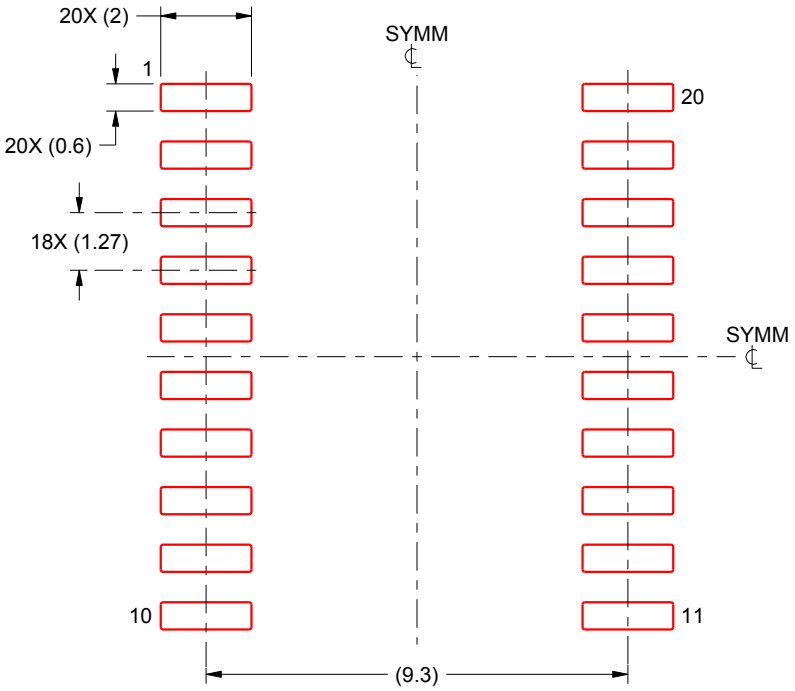

SOLDER PASTE EXAMPLE
BASED ON 0.125 mm THICK STENCIL
SCALE:6X

4220724/A 05/2016

NOTES: (continued)

8. Laser cutting apertures with trapezoidal walls and rounded corners may offer better paste release. IPC-7525 may have alternate design recommendations.
9. Board assembly site may have different recommendations for stencil design.

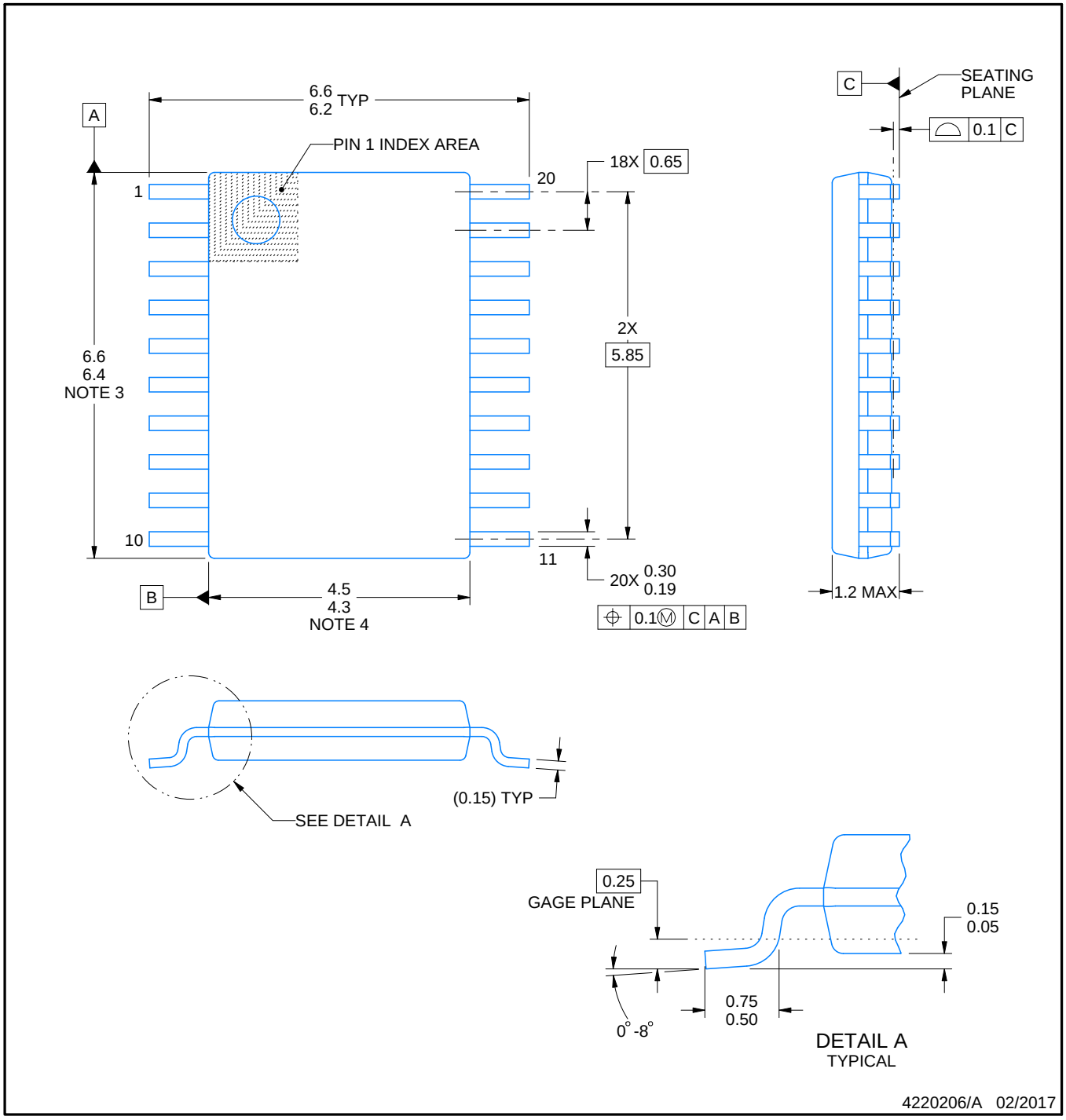

NOTES:

1. All linear dimensions are in millimeters. Any dimensions in parenthesis are for reference only. Dimensioning and tolerancing per ASME Y14.5M.
2. This drawing is subject to change without notice.
3. This dimension does not include mold flash, protrusions, or gate burrs. Mold flash, protrusions, or gate burrs shall not exceed 0.15 mm per side.
4. This dimension does not include interlead flash. Interlead flash shall not exceed 0.25 mm per side.
5. Reference JEDEC registration MO-153.

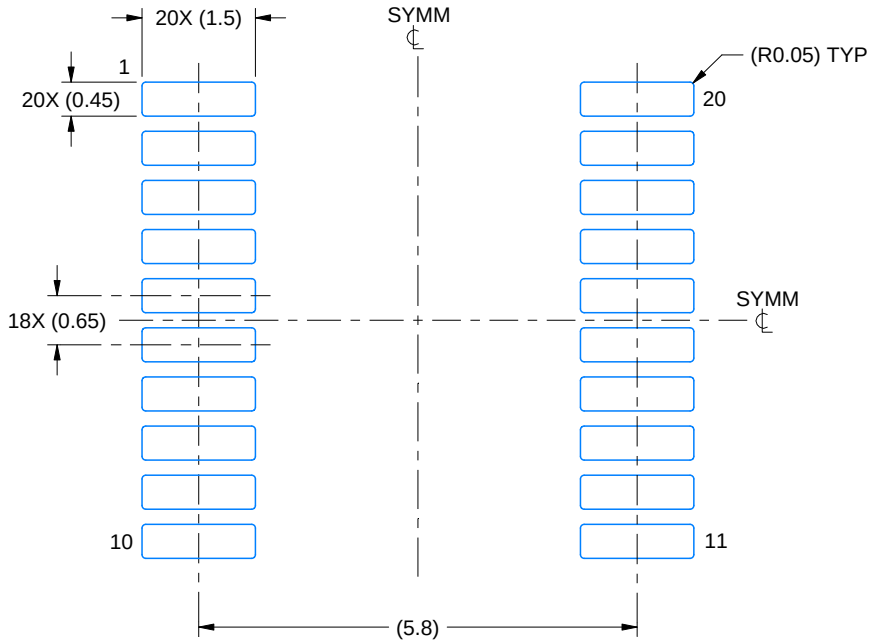

LAND PATTERN EXAMPLE
EXPOSED METAL SHOWN
SCALE: 10X

NON-SOLDER MASK DEFINED (PREFERRED)

SOLDER MASK DEFINED

SOLDER MASK DETAILS

4220206/A 02/2017

NOTES: (continued)

6. Publication IPC-7351 may have alternate designs.
7. Solder mask tolerances between and around signal pads can vary based on board fabrication site.

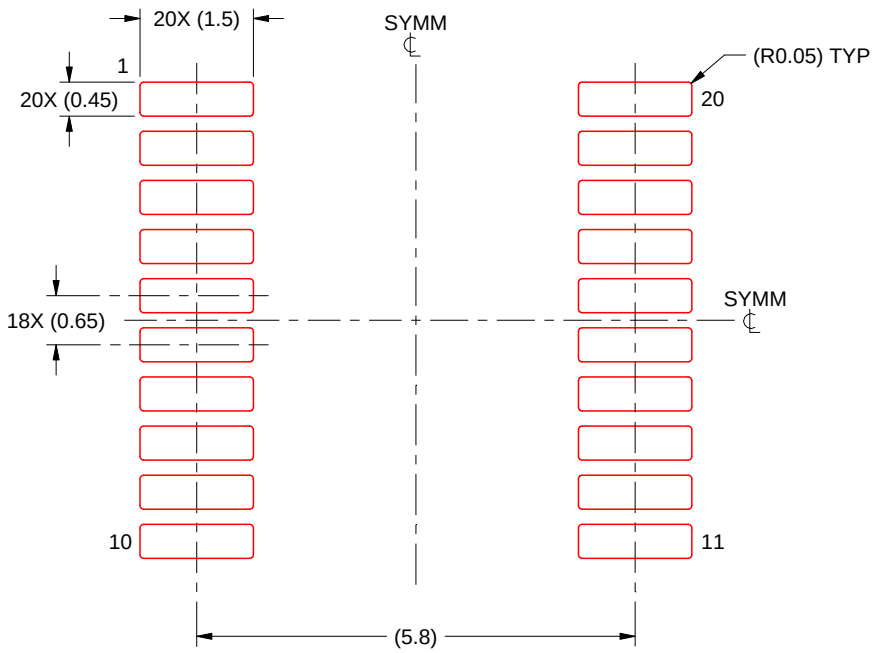

SOLDER PASTE EXAMPLE
BASED ON 0.125 mm THICK STENCIL
SCALE: 10X

4220206/A 02/2017

NOTES: (continued)

8. Laser cutting apertures with trapezoidal walls and rounded corners may offer better paste release. IPC-7525 may have alternate design recommendations.
9. Board assembly site may have different recommendations for stencil design.

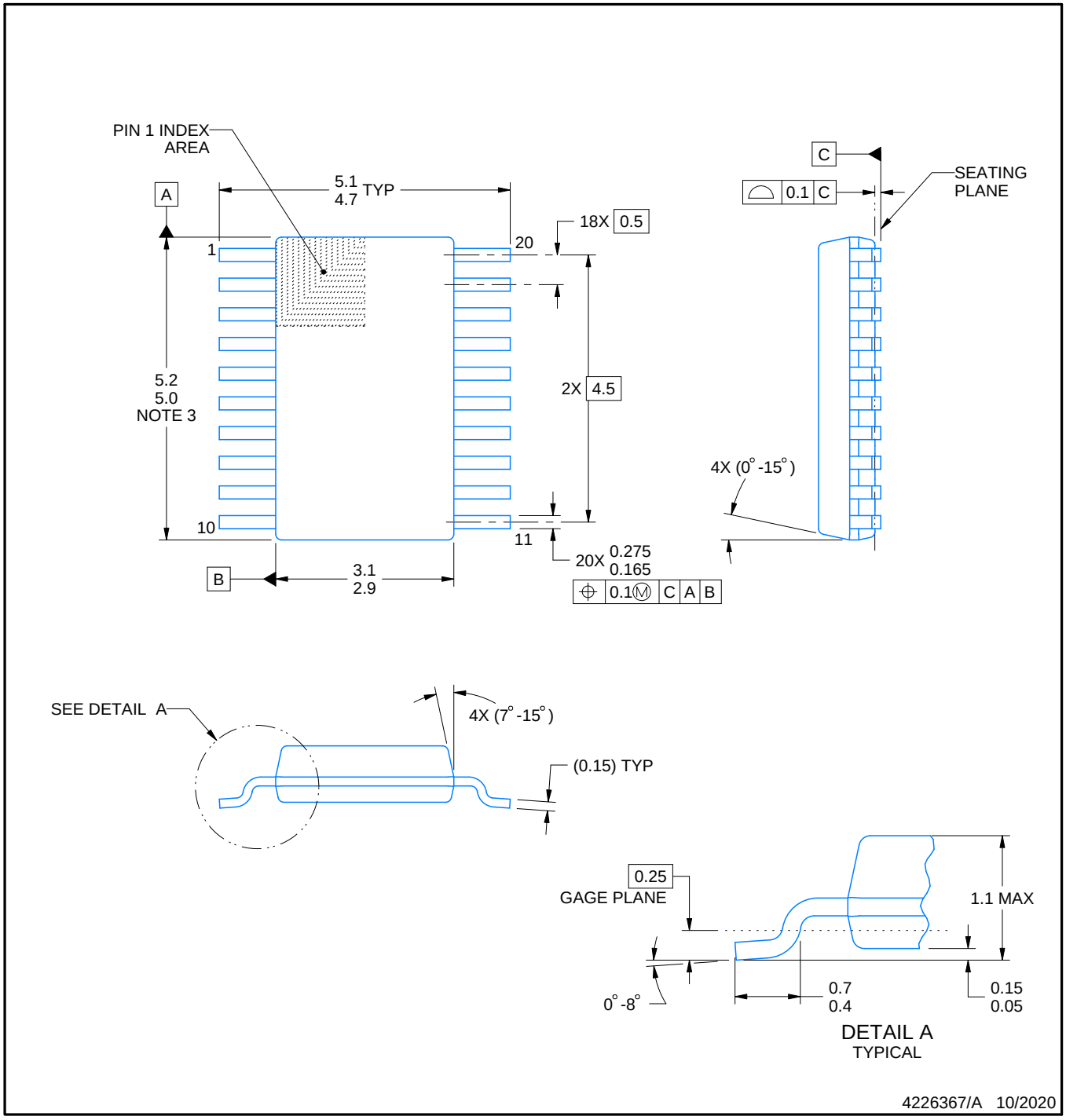

PowerPAD is a trademark of Texas Instruments.

NOTES:

1. All linear dimensions are in millimeters. Any dimensions in parenthesis are for reference only. Dimensioning and tolerancing per ASME Y14.5M.
2. This drawing is subject to change without notice.
3. This dimension does not include mold flash, protrusions, or gate burrs. Mold flash, protrusions, or gate burrs shall not exceed 0.15 mm per side.
4. No JEDEC registration as of September 2020.
5. Features may differ or may not be present.

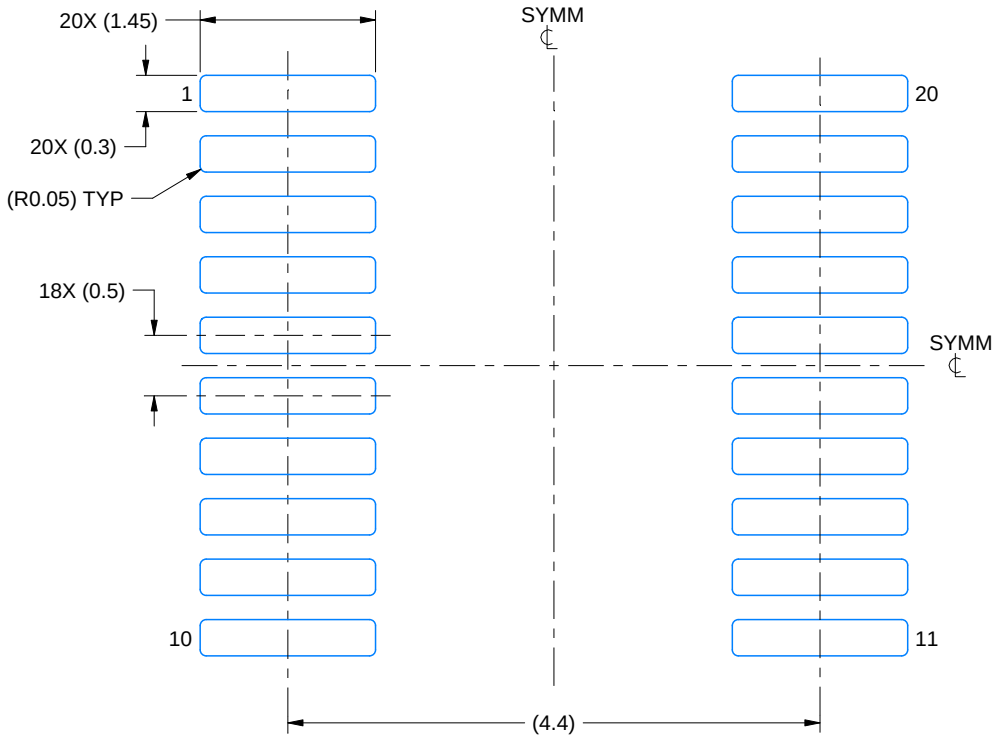

LAND PATTERN EXAMPLE
SCALE: 16X

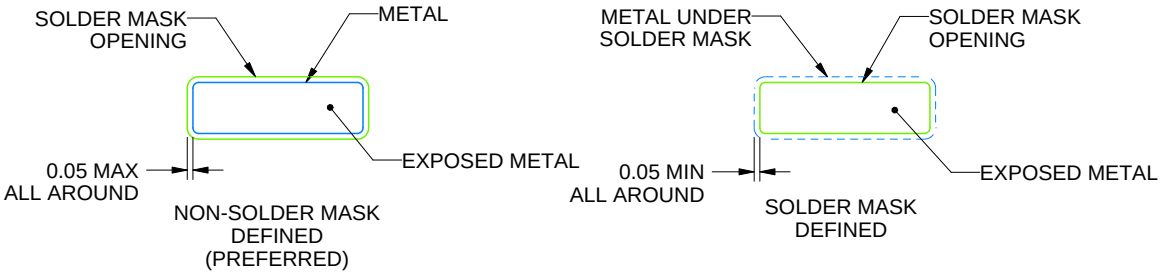

SOLDER MASK DETAILS

4226367/A 10/2020

NOTES: (continued)

6. Publication IPC-7351 may have alternate designs.
7. Solder mask tolerances between and around signal pads can vary based on board fabrication site.
8. This package is designed to be soldered to a thermal pad on the board. For more information, see Texas Instruments literature numbers SLMA002 (www.ti.com/lit/slma002) and SLMA004 (www.ti.com/lit/slma004).
9. Size of metal pad may vary due to creepage requirement.
10. Vias are optional depending on application, refer to device data sheet. It is recommended that vias under paste be filled, plugged or tented.

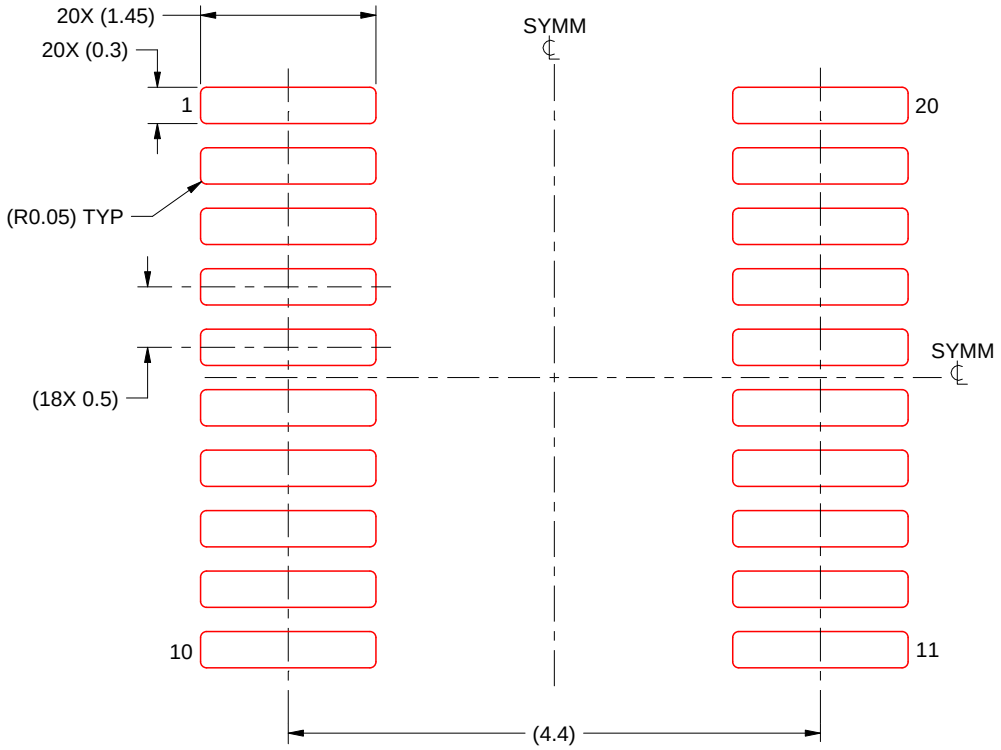

SOLDER PASTE EXAMPLE
BASED ON 0.125 mm THICK STENCIL
SCALE: 16X

4226367/A 10/2020

NOTES: (continued)

11. Laser cutting apertures with trapezoidal walls and rounded corners may offer better paste release. IPC-7525 may have alternate design recommendations.
12. Board assembly site may have different recommendations for stencil design.

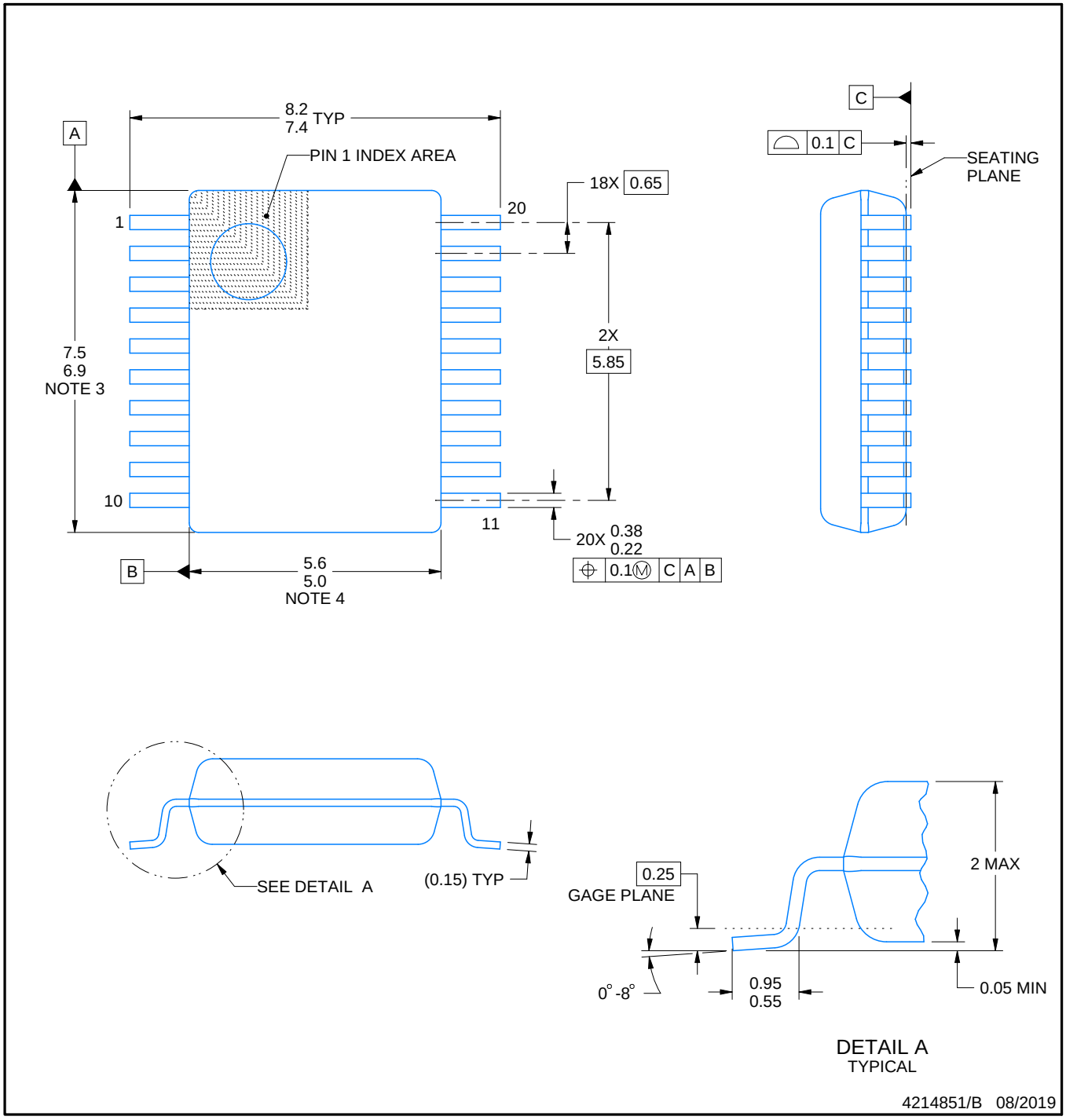

NOTES:

1. All linear dimensions are in millimeters. Any dimensions in parenthesis are for reference only. Dimensioning and tolerancing per ASME Y14.5M.
2. This drawing is subject to change without notice.
3. This dimension does not include mold flash, protrusions, or gate burrs. Mold flash, protrusions, or gate burrs shall not exceed 0.15 mm per side.
4. This dimension does not include interlead flash. Interlead flash shall not exceed 0.25 mm per side.
5. Reference JEDEC registration MO-150.

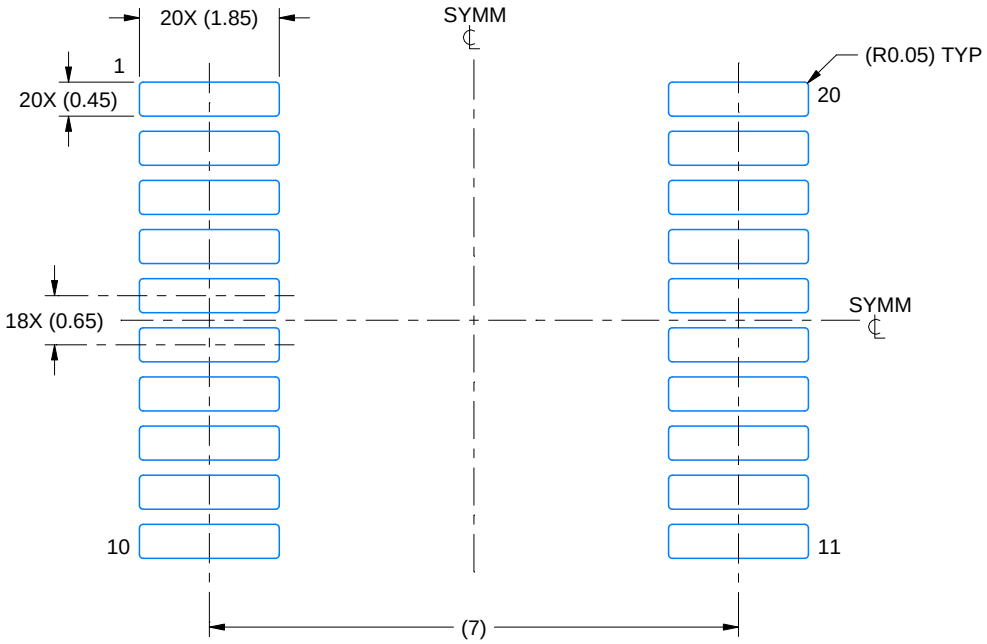

LAND PATTERN EXAMPLE
EXPOSED METAL SHOWN
SCALE: 10X

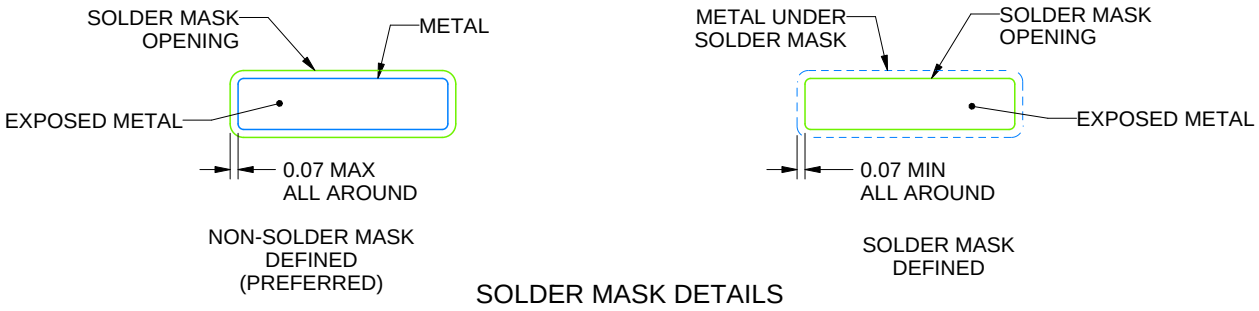

SOLDER MASK DETAILS

4214851/B 08/2019

NOTES: (continued)

6. Publication IPC-7351 may have alternate designs.
7. Solder mask tolerances between and around signal pads can vary based on board fabrication site.

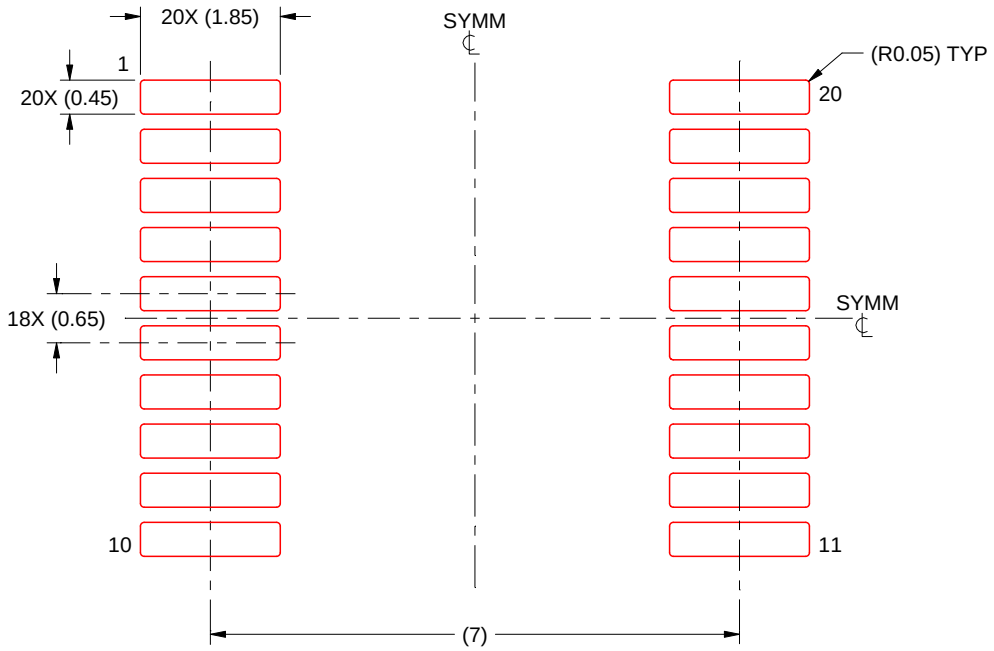

SOLDER PASTE EXAMPLE
BASED ON 0.125 mm THICK STENCIL
SCALE: 10X

4214851/B 08/2019

NOTES: (continued)

8. Laser cutting apertures with trapezoidal walls and rounded corners may offer better paste release. IPC-7525 may have alternate design recommendations.
9. Board assembly site may have different recommendations for stencil design.

MECHANICAL DATA

NS (R-PDSO-G)** **PLASTIC SMALL-OUTLINE PACKAGE**

14-PINS SHOWN

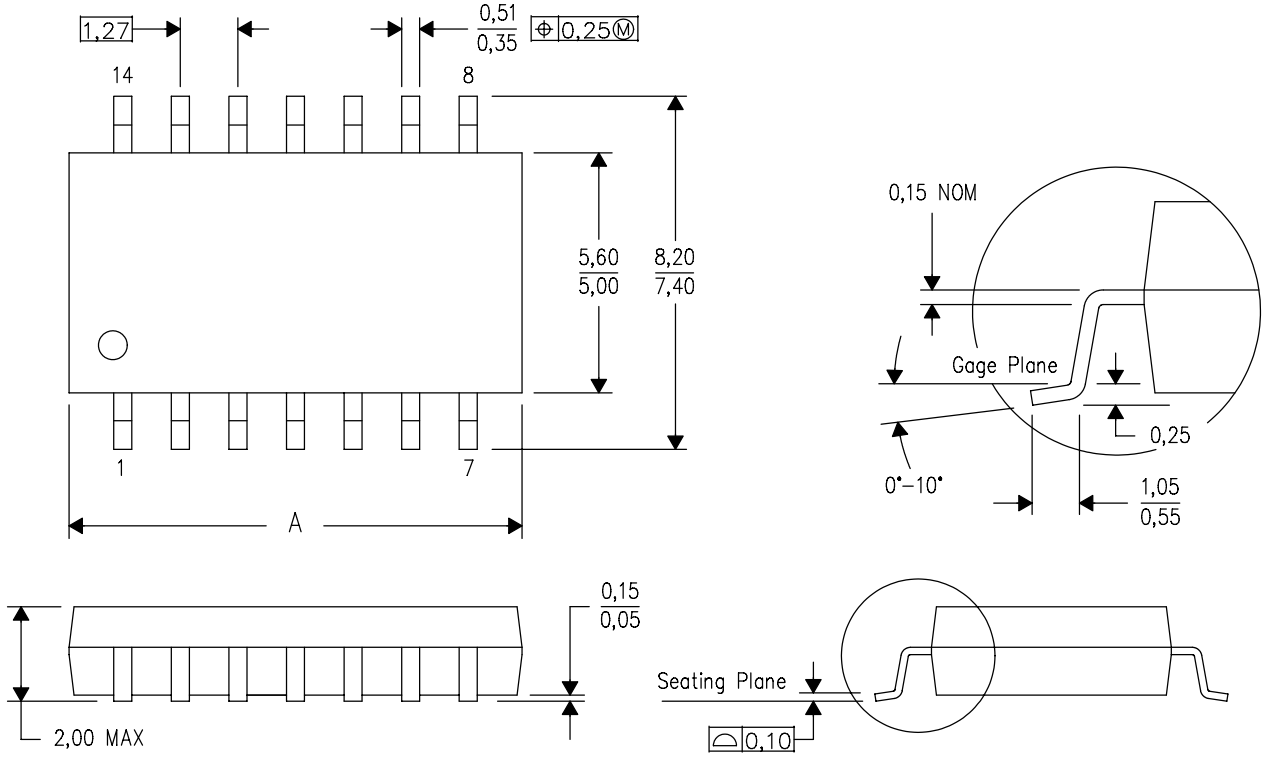

DIM \ PINS **	14	16	20	24
A MAX	10,50	10,50	12,90	15,30
A MIN	9,90	9,90	12,30	14,70

4040062/C 03/03

NOTES:
A. All linear dimensions are in millimeters.
B. This drawing is subject to change without notice.
C. Body dimensions do not include mold flash or protrusion, not to exceed 0,15.

IMPORTANT NOTICE AND DISCLAIMER

TI PROVIDES TECHNICAL AND RELIABILITY DATA (INCLUDING DATA SHEETS), DESIGN RESOURCES (INCLUDING REFERENCE DESIGNS), APPLICATION OR OTHER DESIGN ADVICE, WEB TOOLS, SAFETY INFORMATION, AND OTHER RESOURCES “AS IS” AND WITH ALL FAULTS, AND DISCLAIMS ALL WARRANTIES, EXPRESS AND IMPLIED, INCLUDING WITHOUT LIMITATION ANY IMPLIED WARRANTIES OF MERCHANTABILITY, FITNESS FOR A PARTICULAR PURPOSE OR NON-INFRINGEMENT OF THIRD PARTY INTELLECTUAL PROPERTY RIGHTS.

These resources are intended for skilled developers designing with TI products. You are solely responsible for (1) selecting the appropriate TI products for your application, (2) designing, validating and testing your application, and (3) ensuring your application meets applicable standards, and any other safety, security, regulatory or other requirements.

These resources are subject to change without notice. TI grants you permission to use these resources only for development of an application that uses the TI products described in the resource. Other reproduction and display of these resources is prohibited. No license is granted to any other TI intellectual property right or to any third party intellectual property right. TI disclaims responsibility for, and you will fully indemnify TI and its representatives against, any claims, damages, costs, losses, and liabilities arising out of your use of these resources.

TI’s products are provided subject to TI’s Terms of Sale or other applicable terms available either on ti.com or provided in conjunction with such TI products. TI’s provision of these resources does not expand or otherwise alter TI’s applicable warranties or warranty disclaimers for TI products.

TI objects to and rejects any additional or different terms you may have proposed.

Mailing Address: Texas Instruments, Post Office Box 655303, Dallas, Texas 75265
Copyright © 2025, Texas Instruments Incorporated