TLV840 Nano-Power Ultra-Low Voltage Supervisor with Adjustable Reset Time Delay

1 Features

- Operating voltage range : 0.7 V to 6 V
- Nano supply current : 120 nA (Typical)
- Fixed threshold voltage (V_{IT-}): 0.8 V to 5.4 V
  - Threshold voltages available in 100mV steps
  - High accuracy: ±0.5% (Typical)
  - Built-in hysteresis (V_{HYS}): 5% (Typical)
- Reset time delay (t_D): capacitor-based programmable (TLV840C, TLV840M)
  - Minimum time delay: 40 µs (typical) without capacitor
- Active-low manual reset ($\overline{MR}$) (TLV840M)
- Four output topologies:
  - TLV840xxDL: open-drain, active-low ($\overline{RESET}$)
  - TLV840xxPL: push-pull, active-low ($\overline{RESET}$)
  - TLV840xxDH: open-drain, active-high (RESET)
  - TLV840xxPH: push-pull, active-high (RESET)
- Wide temperature range: –40°C to +125°C
- Package: SOT23-5 (DBV)

2 Applications

- Motor Drives
- Factory Automation and Control
- Home Theater and Entertainment
- Electronic Point of Sale
- Grid Infrastructure
- Data Center and Enterprise Computing
- Multifunction Printer

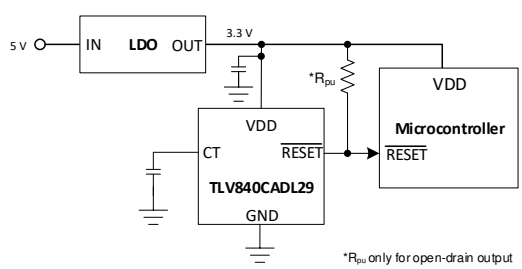

Typical Application Circuit

3 Description

The TLV840 family of voltage supervisors or reset ICs can operate at high voltage levels while maintaining very low quiescent current across the whole VDD and temperature range. TLV840 offers best combination of low power consumption, high accuracy and low propagation delay (t_{p_HL}= 30 µs typical).

Reset output signal is asserted when the voltage at VDD drops below the negative voltage threshold (V_{IT-}). Reset signal is cleared when VDD rise above V_{IT-} plus hysteresis (V_{HYS}) and the reset time delay (t_D) expires. Reset time delay can be programmed by connecting a capacitor between the CT pin and ground for TLV840C and TLV840M. For a minimum reset delay time the CT pin can be left floating. TLV840N does not offer a programmable delay and offers fixed reset delay timing options: 40 µs, 2 ms, 10 ms, 30 ms, 50 ms, 80 ms, 100 ms, 150 ms, 200 ms.

Additional features: Low power-on reset voltage (V_{POR}), built-in glitch immunity protection for VDD, built-in hysteresis, low open-drain output leakage current ($I_{lkg(OD)}$). TLV840 is a perfect voltage monitoring solution for industrial applications and battery-powered / low-power applications.

Device Information

PART NUMBER	PACKAGE(1)	BODY SIZE (NOM)
TLV840	SOT-23 (5) (DBV)	2.90 mm × 1.60 mm

(1) For package details, see the mechanical drawing addendum at the end of the data sheet.

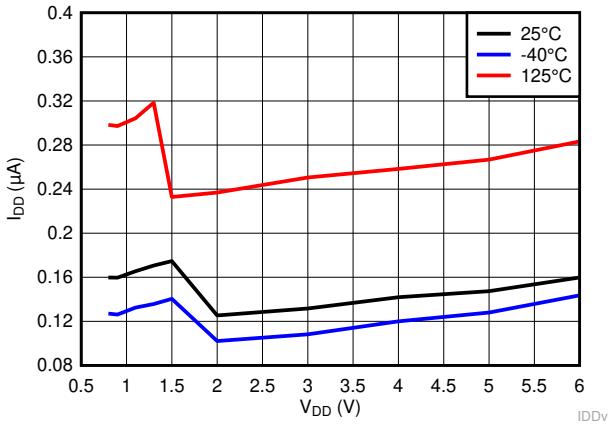

Typical Supply Current

An IMPORTANT NOTICE at the end of this data sheet addresses availability, warranty, changes, use in safety-critical applications, intellectual property matters and other important disclaimers. PRODUCTION DATA.

Table of Contents

1 Features....1
2 Applications....1
3 Description....1
4 Revision History....2
5 Device Comparison....3
6 Pin Configuration and Functions....4
Pin Functions....4
7 Specifications....5
7.1 Absolute Maximum Ratings....5
7.2 ESD Ratings....5
7.3 Recommended Operating Conditions....5
7.4 Thermal Information....5
7.5 Electrical Characteristics....6
7.6 Timing Requirements....7
7.7 Timing Diagrams....8
7.8 Typical Characteristics....9
8 Detailed Description....10
8.1 Overview....10
8.2 Functional Block Diagram....10
8.3 Feature Description....10
8.4 Device Functional Modes....14
9 Application and Implementation....15
9.1 Application Information....15
9.2 Typical Application....15
10 Power Supply Recommendations....18
11 Layout....19
11.1 Layout Guidelines....19
11.2 Layout Example....19
12 Device and Documentation Support....20
12.1 Device Nomenclature....20
12.2 Receiving Notification of Documentation Updates....21
12.3 Support Resources....21
12.4 Trademarks....21
13 Mechanical, Packaging, and Orderable Information....21

4 Revision History

NOTE: Page numbers for previous revisions may differ from page numbers in the current version.

Changes from Revision B (July 2020) to Revision C (September 2020)	Page
• Updated the numbering format for tables, figures, and cross-references throughout the document	1
• Updated Pin Connections	4
• Added Timing Diagram	8
• New Typical Characteristics	9

Changes from Revision A (February 2020) to Revision B (July 2020)	Page
• APL to RTM release	1

Changes from Revision * (December 2019) to Revision A (February 2020)	Page
• Initial APL Release	1

Copyright © 2020 Texas Instruments Incorporated

5 Device Comparison

Figure 5-1 shows the device naming nomenclature to compare the different device variants. See Table 12-1 for a more detailed explanation.

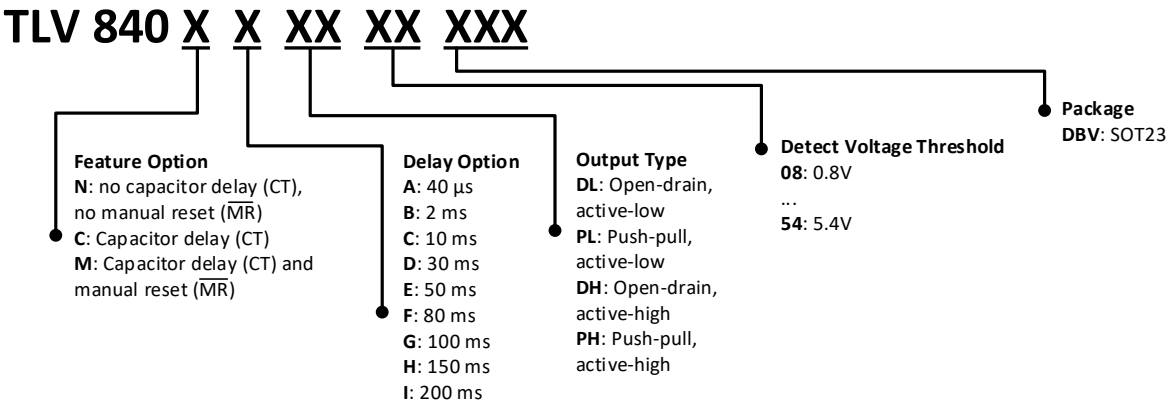

Figure 5-1. Device Naming Nomenclature

Orderable part numbers starting with TLV840C and TLV840M are only available with the delay option A. However, longer delays can be achieved through an external capacitor on the CT pin. Leaving the CT pin floating will result in typical 40us delay for these 2 feature options.

6 Pin Configuration and Functions

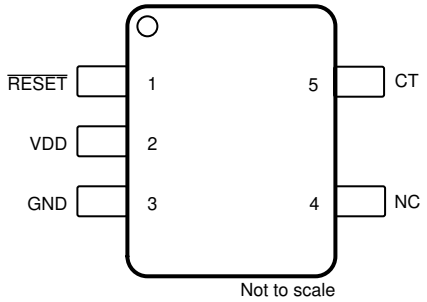

Figure 6-1. Pin Configuration TLV840C, DBV Package, 5-Pin SOT-23, TLV840C Top View

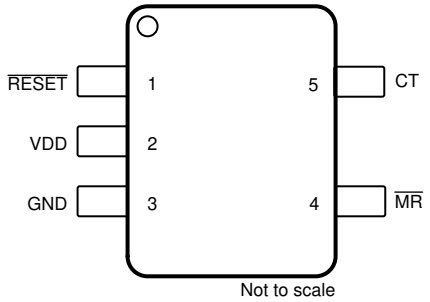

Figure 6-2. Pin Configuration TLV840M, DBV Package, 5-Pin SOT-23, TLV840M Top View

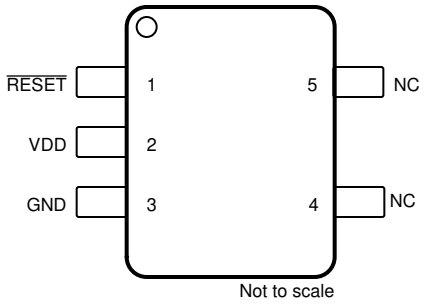

Figure 6-3. Pin Configuration TLV840N, DBV Package, 5-Pin SOT-23, TLV840N Top View

Pin Functions

PIN				I/O	DESCRIPTION
PIN NUMBER	TLV840CxL	TLV840MxL	TLV840NxL		
1	$\overline{\text{RESET}}$	$\overline{\text{RESET}}$	$\overline{\text{RESET}}$	O	**Active-Low Output Reset Signal:** This pin is driven logic low when VDD voltage falls below the negative voltage threshold (V_{IT-}). $\overline{\text{RESET}}$ remains low (asserted) for the delay time period (t_D) after VDD voltage rises above $V_{IT+}=V_{IT-}+V_{HYS}$.
2	VDD	VDD	VDD	I	**Input Supply Voltage** TLV840 monitors VDD voltage
3	GND	GND	GND	_	**Ground**
4	NC	$\overline{\text{MR}}$	NC	I	**Manual Reset** Pull this pin to a logic low to assert a reset signal in the $\overline{\text{RESET}}$output pin. After $\overline{\text{MR}}$pin is left floating or pulls to logic high, the $\overline{\text{RESET}}$output deasserts to the nominal state after the reset delay time (t_D)expires. **NC stands for "No Connect". The pin can be left floating. Recommended connection to GND.**
5	CT	CT	NC	-	**Capacitor Time Delay Pin**. The CT pin offers a user-programmable delay time. Connect an external capacitor on this pin to adjust time delay. When not in use leave pin floating for the smallest fixed time delay. **NC stands for "No Connect". The pin can be left floating. Recommended connection to GND.**

Copyright © 2020 Texas Instruments Incorporated

7 Specifications

7.1 Absolute Maximum Ratings

over operating free-air temperature range, unless otherwise noted[1]

		MIN	MAX	UNIT
Voltage	VDD	–0.3	6.5	V
Voltage	CT, $\overline{MR}$ [2], $\overline{RESET}$ (TLV840xxPL)	–0.3	V_{DD}+0.3 [3]	V
	$\overline{RESET}$ (TLV840xxDL)	–0.3	6.5	
Current	$\overline{RESET}$, RESET pin	–20	20	mA
Temperature [4]	Operating ambient temperature, T_A	–40	125	℃
Temperature [4]	Storage, T_{stg}	–65	150	

(1) Stresses beyond those listed under *Absolute Maximum Rating* may cause permanent damage to the device. These are stress ratings only, which do not imply functional operation of the device at these or any other conditions beyond those indicated under *Recommended Operating Condition*. Exposure to absolute-maximum-rated conditions for extended periods may affect device reliability.
(2) If the logic signal driving $\overline{MR}$is less than V_{DD}, then additional current flows into V_{DD} and out of $\overline{MR}$.
(3) The absolute maximum rating is (VDD + 0.3) V or 6.5 V, whichever is smaller
(4) As a result of the low dissipated power in this device, it is assumed that $T_J = T_A$.

7.2 ESD Ratings

			VALUE	UNIT
$V_{(ESD)}$	Electrostatic discharge	Human body model (HBM), per ANSI/ESDA/JEDEC JS-001[1]	± 2000	V
		Charged device model (CDM), per JEDEC specification JESD22-C101[2]	± 750	

(1) JEDEC document JEP155 states that 500-V HBM allows safe manufacturing with a standard ESD control process.
(2) JEDEC document JEP157 states that 250-V CDM allows safe manufacturing with a standard ESD control process.

7.3 Recommended Operating Conditions

over operating free-air temperature range (unless otherwise noted)

		MIN	NOM	MAX	UNIT
Voltage	VDD (TLV840xxxL)	0.7		6	V
	CT, $\overline{RESET}$ (TLV840xxxL), $\overline{MR}$	0		6	
Current	$\overline{RESET}$ pin current	–5		5	mA
T_A	Operating ambient temperature	–40		125	℃

7.4 Thermal Information

THERMAL METRIC[1]		TLV840 DBV (SOT23-5) 5 PINS	UNIT
$R_{\theta JA}$	Junction-to-ambient thermal resistance	193.5	°C/W
$R_{\theta JC(top)}$	Junction-to-case (top) thermal resistance	117.9	°C/W
$R_{\theta JB}$	Junction-to-board thermal resistance	98.5	°C/W
ψ_{JT}	Junction-to-top characterization parameter	43.4	°C/W
ψ_{JB}	Junction-to-board characterization parameter	97.8	°C/W
$R_{\theta JC(bot)}$	Junction-to-case (bottom) thermal resistance	N/A	°C/W

(1) For more information about traditional and new thermal metrics, see the Semiconductor and IC Package Thermal Metrics application report.

7.5 Electrical Characteristics

At 0.7 V ≤ V_{DD} ≤ 6 V, CT = $\overline{MR}$= Open, $\overline{RESET}$ pull-up resistor ($R_{pull-up}$) = 100 kΩ to VDD, output reset load (C_{LOAD}) = 10 pF and over operating free-air temperature range –40℃ to 125℃, unless otherwise noted. VDD ramp rate ≤ 100 mV/µs. Typical values are at T_A = 25℃

PARAMETER		TEST CONDITIONS		MIN	TYP	MAX	UNIT
COMMON PARAMETERS							
V_{DD}	Input supply voltage	TLV840xxxL		0.7		6	V
V_{IT-}	Negative-going input threshold accuracy (1)	V_{IT-} = 0.8 V to 1.7 V		–2.5	±0.5	2.5	%
		V_{IT-} = 1.8 V to 5.4 V		–2	±0.5	2	
V_{HYS}	Hysteresis on V_{IT-} pin			2.5	5	7	%
I_{DD}	Supply current into VDD pin (2)	V_{DD} = 2 V V_{IT-} = 0.8 V to 1.8 V	T_A = –40℃ to 85℃		0.12	0.3	µA
					0.12	1.0	
		V_{DD} = 6 V V_{IT-} = 0.8 V to 5.5 V	T_A = –40℃ to 85℃		0.15	0.4	
					0.15	1.2	
$V_{\overline{MR}_L}$	Manual reset logic low input (2)					0.3V_{DD}	V
$V_{\overline{MR}_H}$	Manual reset logic high input (2)			0.7V_{DD}			V
$R_{\overline{MR}}$	Manual reset internal pull-up resistance				100		kΩ
R_{CT}	CT pin internal resistance				500		kΩ
TLV840xxDL (Open-drain active-low)							
V_{POR}	Power on Reset Voltage (3)	$V_{OL(max)}$ = 300 mV $I_{OUT(Sink)}$ = 15 µA				700	mV
V_{OL}	Low level output voltage	V_{DD} = 0.7 V, 0.8 V ≤ V_{IT-} ≤ 1.5 V $I_{OUT(Sink)}$ = 15 µA				300	mV
		V_{DD} =1.5 V, 1.6 V ≤ V_{IT-} ≤ 3.3 V $I_{OUT(Sink)}$ = 500 µA				300	
		V_{DD} = 3.3 V, 3.4 V ≤ V_{IT-} ≤ 5.5 V $I_{OUT(Sink)}$ = 2 mA				300	
$I_{lkg(OD)}$	Open-Drain output leakage current	V_{DD} = V_{PULLUP} = 6V T_A = –40℃ to 85℃			10	100	nA
		V_{DD} = V_{PULLUP} = 6V			10	350	nA
TLV840xxPL (Push-pull active-low)							
V_{POR}	Power on Reset Voltage (3)	$V_{OL(max)}$ = 300 mV $I_{OUT(Sink)}$ = 15 µA				700	mV
V_{OL}	Low level output voltage	V_{DD} = 0.7 V, 0.8 V ≤ V_{IT-} ≤ 1.5 V $I_{OUT(Sink)}$ = 15 µA				300	mV
		V_{DD} = 1.5 V, 1.6 V ≤ V_{IT-} ≤ 3.3 V $I_{OUT(Sink)}$ = 500 µA				300	
		V_{DD} = 3.3 V, 3.4 V ≤ V_{IT-} ≤ 5.5 V $I_{OUT(Sink)}$ = 2 mA				300	
V_{OH}	High level output voltage	V_{DD} = 1.8 V, 0.8 V ≤ V_{IT-} ≤ 1.4 V $I_{OUT(Source)}$ = 500 µA		0.8V_{DD}			V
		V_{DD} = 3.3 V, 1.5 V ≤ V_{IT-} ≤ 3.0 V $I_{OUT(Source)}$ = 500 µA		0.8V_{DD}			
		V_{DD} = 6 V, 3.1 V ≤ V_{IT-} ≤ 5.5 V $I_{OUT(Source)}$ = 2 mA		0.8V_{DD}			

(1) V_{IT-} threshold voltage range from 0.8 V to 5.4 V (for DL, PL versions) in 100 mV steps
(2) If the logic signal driving $\overline{MR}$ is less than VDD, then I_{DD} current increases based on voltage differential
(3) V_{POR} is the minimum V_{DD} voltage level for a controlled output state

Copyright © 2020 Texas Instruments Incorporated

7.6 Timing Requirements

At 0.7 V ≤ V_{DD} ≤ 6 V, CT = $\overline{MR}$= Open, $\overline{RESET}$ pull-up resistor ($R_{pull-up}$) = 100 kΩ to VDD, output reset load (C_{LOAD}) = 10 pF and over operating free-air temperature range –40℃ to 125℃, unless otherwise noted. VDD ramp rate ≤ 100 mV/µs. Typical values are at T_A = 25℃

PARAMETER			TEST CONDITIONS	MIN	TYP	MAX	UNIT
t_{P_HL}	Propagation detect delay for VDD falling below V_{IT-}		V_{DD} : (V_{IT+} + 10%) to (V_{IT-} – 10%) (1)		30	50	µs
t_D	Reset time delay	TLV840xA	CT pin = Open or NC (V_{IT-} - 10%) to (V_{IT+} + 10%)		40	80	µs
		TLV840CA, TLV840MA	CT pin = 10 nF		6.2		ms
			CT pin = 1 µF		619		ms
t_{GI_VIT-}	Glitch immunity V_{IT-}		5% V_{IT-} overdrive(2)		10		µs
$t_{\overline{MR}_PW}$	$\overline{MR}$ pin pulse duration to assert reset (3)				500		ns
$t_{\overline{MR}_RES}$	Propagation delay from $\overline{MR}$ low to reset assertion		V_{DD} = 3.3 V, $\overline{MR}$= $V_{\overline{MR}_H}$ to $V_{\overline{MR}_L}$		1		µs
$t_{\overline{MR}_tD}$	Delay from $\overline{MR}$ release to reset deassert		V_{DD} = 3.3 V, $\overline{MR}$= $V_{\overline{MR}_L}$ to $V_{\overline{MR}_H}$		t_D		ms

(1) t_{P_HL} measured from threshold trip point (V_{IT-}) to RESET assert. V_{IT+} = V_{IT-} + V_{HYS}
(2) Overdrive % = [(V_{DD}/ V_{IT-}) – 1] × 100%
(3) Refer section on Manual Reset Input for min pulse width needed on $\overline{MR}$ pin

7.7 Timing Diagrams

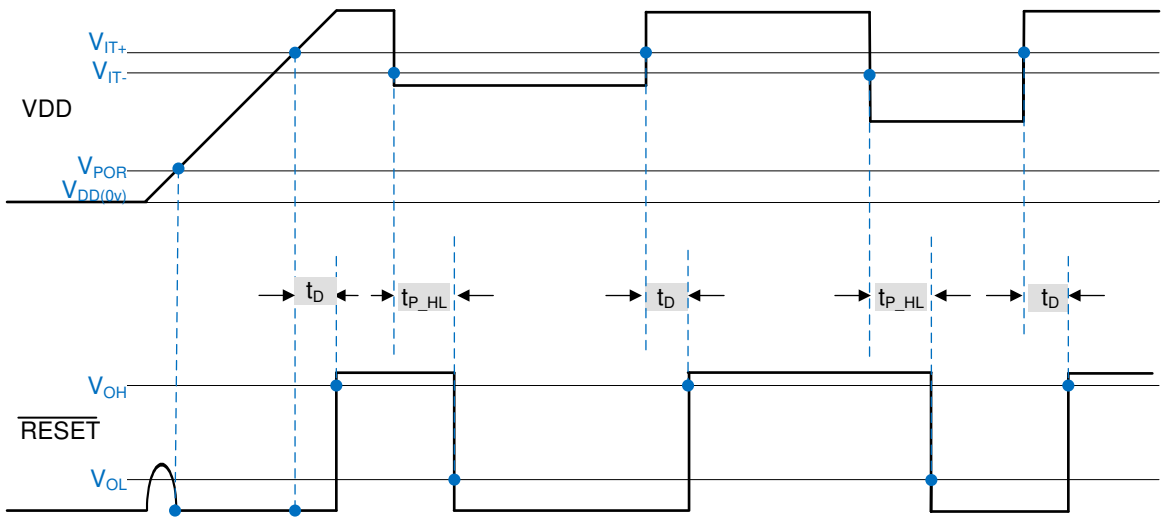

(1) Open-Drain timing diagram where $\overline{RESET}$ is pulled up to VDD via a pull-up resistor

(2) $\overline{RESET}$output is undefined when V_{DD} is < V_{POR}

Figure 7-1. Timing Diagram TLV840DL (Open-Drain Active-Low)

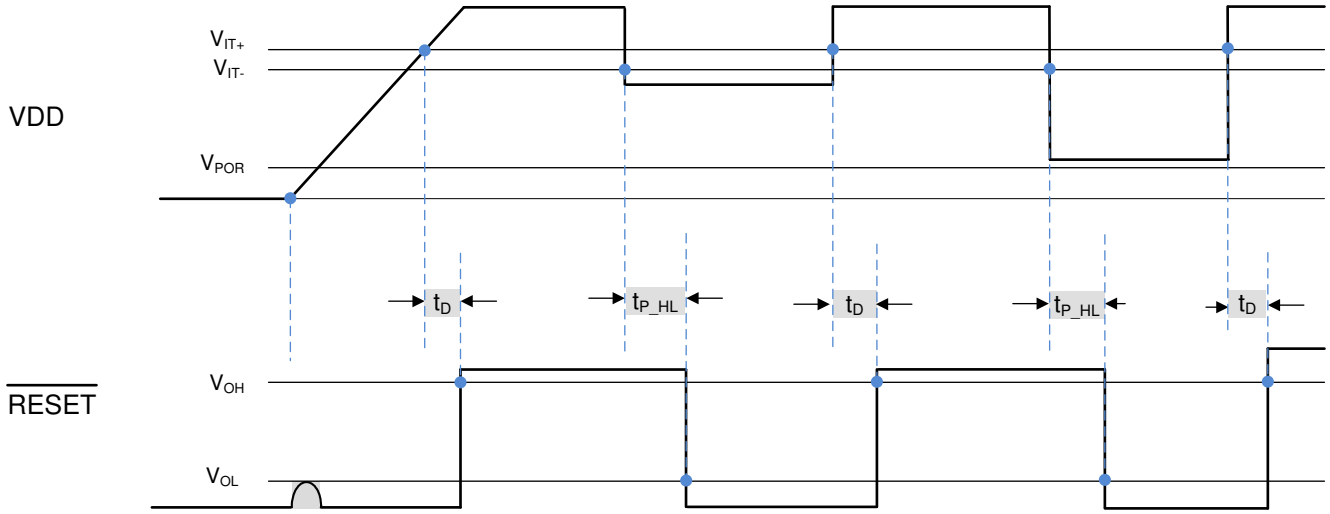

(3) $\overline{RESET}$output is undefined when V_{DD} is < V_{POR} and limited to V_{OL} for V_{DD} slew rate = 100mV / µS

Figure 7-2. Timing Diagram TLV840PL (Push-Pull Active-Low)

Copyright © 2020 Texas Instruments Incorporated

7.8 Typical Characteristics

Typical characteristics show the typical performance of the TLV840 device. Test conditions are T_A = 25°C, VDD = 3.3 V, $R_{Pull\text{-}Up}$ = 100 kΩ, C_{LOAD} = 50 pF, unless otherwise noted.

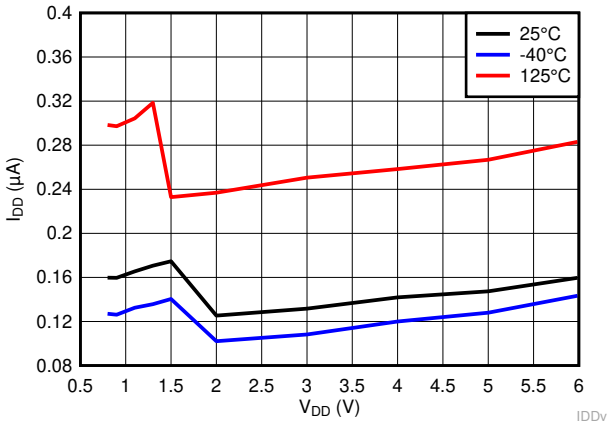

Figure 7-3. Supply Current vs Supply Voltage for TLV840MADL13

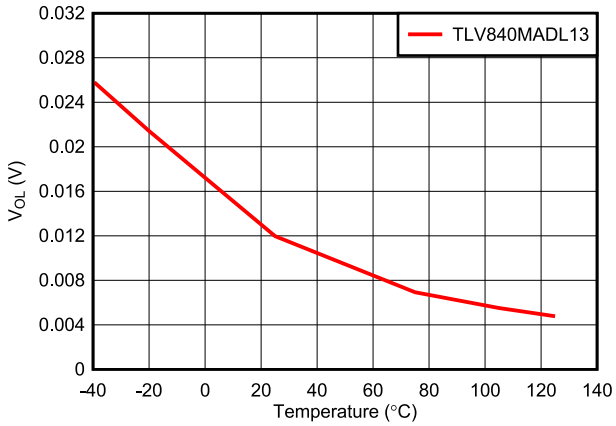

Figure 7-4. Low Output Voltage (V_{OL}) vs Temperature for TLV840MADL13 (V_{DD} = 0.7 V)

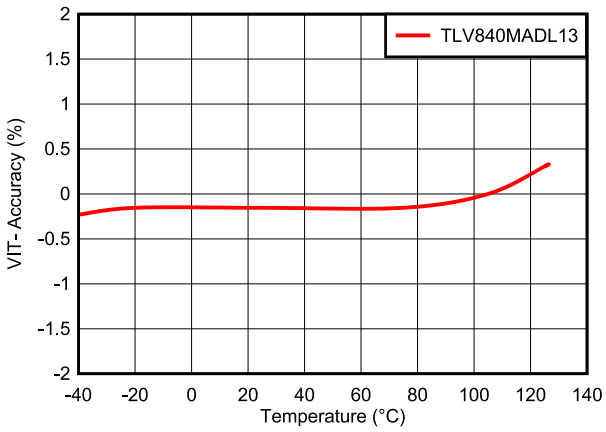

Figure 7-5. Voltage Threshold Accuracy vs Temperature for TLV840MADL13

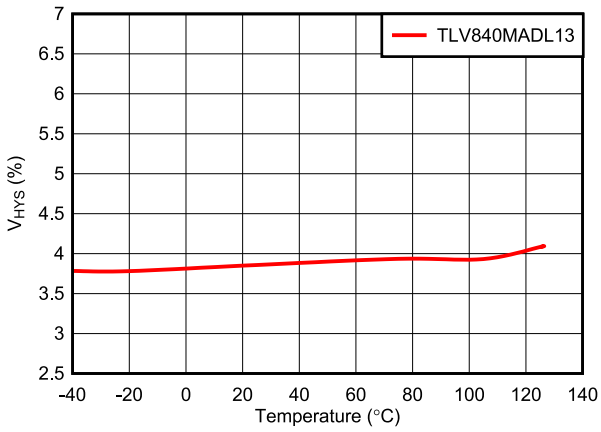

Figure 7-6. Voltage Hysteresis vs Temperature for TLV840MADL13

8 Detailed Description

8.1 Overview

The TLV840 is a family of nano-quiescent current voltage detectors with fixed threshold voltage. TLV840 features include programable reset time delay using external capacitor, active-low manual reset, 0.5% typical monitor threshold accuracy with hysteresis and glitch immunity.

Fixed negative threshold voltages (V_{IT-}) can be factory set from 0.8 V to 5.4 V. TLV840 is available in SOT-23 5-pin industry standard package.

8.2 Functional Block Diagram

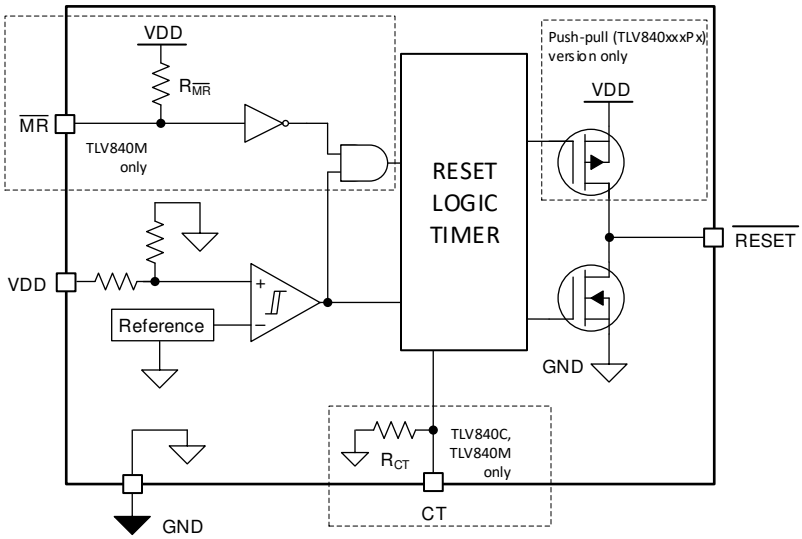

8.3 Feature Description

8.3.1 Input Voltage (VDD)

VDD pin is monitored by the internal comparator to indicate when VDD falls below the fixed threshold voltage. VDD also functions as the supply for the internal bandgap, internal regulator, state machine, buffers and other control logic blocks. Good design practice involve placing a 0.1 µF to 1 µF bypass capacitor at VDD input for noisy applications to ensure enough charge is available for the device to power up correctly.

Copyright © 2020 Texas Instruments Incorporated

8.3.1.1 VDD Hysteresis

The internal comparator has built-in hysteresis to avoid erroneous output reset release. If the voltage at the VDD pin falls below V_{IT-} the output reset is asserted. When the voltage at the VDD pin goes above V_{IT-} plus hysteresis (V_{HYS}) the output reset is deasserted after t_D delay.

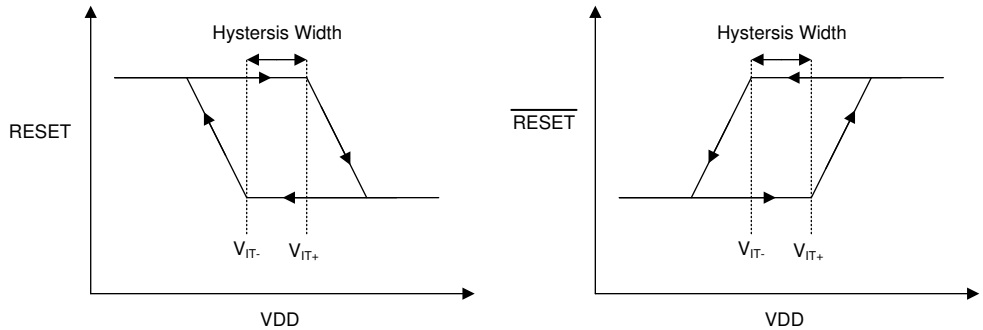

Figure 8-1. Hysteresis Diagram

8.3.1.2 VDD Transient Immunity

The TLV840 is immune to quick voltage transients or excursion on VDD. Sensitivity to transients depends on both pulse duration (t_{GI_VIT-}) found in Section 7.6 and overdrive. Overdrive is defined by how much VDD deviates from the specified threshold. Threshold overdrive is calculated as a percent of the threshold in question, as shown in Equation 1.

$$\text{Overdrive} = \left| \left(V_{DD} / V_{IT-} - 1 \right) \times 100\% \right| \quad (1)$$

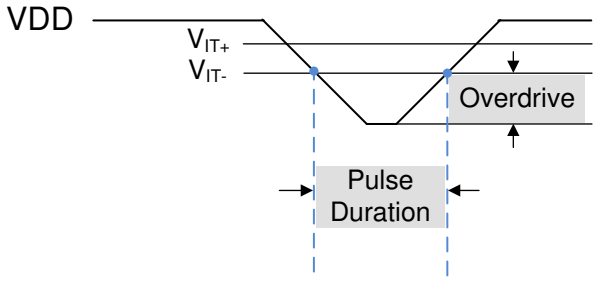

Figure 8-2. Overdrive vs Pulse Duration

8.3.2 User-Programmable Reset Time Delay

The reset time delay can be set to a minimum value of 80 µs by leaving the CT pin floating, or a maximum value of approximately 6.2 seconds by connecting 10 µF delay capacitor. The reset time delay (t_D) can be programmed by connecting a capacitor no larger than 10 µF between CT pin and GND.

The relationship between external capacitor (C_{CT}) in µF at CT pin and the time delay (t_D) in seconds is given by Equation 2.

$$t_D = -\ln(0.29) \times R_{CT} \times C_{CT} + t_D \text{ (CT pin = Open)} \quad (2)$$

Equation 2 is simplified to Equation 3 by plugging R_{CT} and t_D (CT pin = Open) given in *Section 7.5* section:

$$t_D = 618937 \times C_{CT} + 80\mu s \quad (3)$$

Equation 4 solves for external capacitor value (C_{CT}) in units of µF where t_D is in units of seconds

$$C_{CT} = (t_D - 80\mu s) \div 618937 \quad (4)$$

The recommended maximum delay capacitor for the TLV840 is limited to 10 µF as this ensures there is enough time for the capacitor to fully discharge when the reset condition occurs. When a voltage fault occurs, the previously charged up capacitor discharges, and if the monitored voltage returns from the fault condition before the delay capacitor discharges completely, the reset delay will be shorter than expected because the delay capacitor will begin charging from a voltage above zero. Larger delay capacitors can be used so long as the capacitor has enough time to fully discharge during the duration of the voltage fault. The amount of time required to discharge the delay capacitor relative to the reset delay increases as VDD overdrive increases as shown in Figure 8-3.

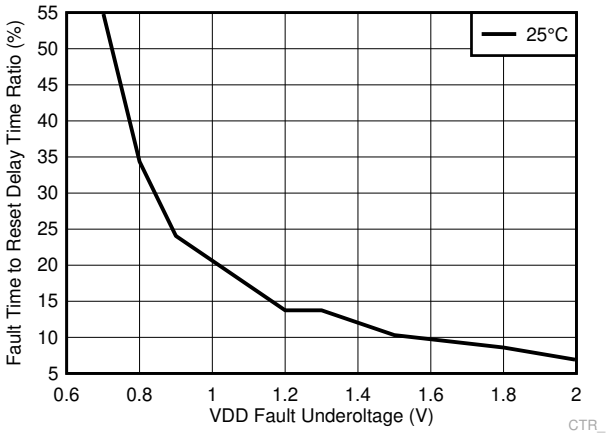

Figure 8-3. C_{CT} Discharge Time During Fault Condition (V_{IT-} = 2.1 V, C_{CT} = 1 µF)

Copyright © 2020 Texas Instruments Incorporated

8.3.3 Manual Reset ($\overline{MR}$) Input for TLV840M Only

The manual reset ($\overline{MR}$) input allows a processor GPIO or other logic circuits to initiate a reset. A logic low on $\overline{MR}$ with pulse duration longer than $t_{\overline{MR}_PW}$ will cause the reset output to assert. After $\overline{MR}$ returns to a logic high ($V_{\overline{MR}_H}$) and VDD is above V_{IT+}, reset is deasserted after the user programmed reset time delay (t_D) expires.

The minimum duration for which $\overline{MR}$ is held under $V_{\overline{MR}_L}$ must be at least 1% of $t_{\overline{MR}_tD}$. Otherwise, the effective reset delay will be shorter roughly by the difference between 1% of $t_{\overline{MR}_tD}$ and the actual $\overline{MR}$ pulse width. For large capacitor based delays this difference could be noticeable unless care is taken to lengthen the $\overline{MR}$ pulse width.

$\overline{MR}$ is internally connected to VDD through a pull-up resistor $R_{\overline{MR}}$ shown in Section 8.2. If the logic signal controlling $\overline{MR}$ is less than VDD, then additional current flows from VDD into $\overline{MR}$ internally. For minimum current consumption, drive $\overline{MR}$ to either VDD or GND. $V_{\overline{MR}}$ should not be higher than VDD voltage.

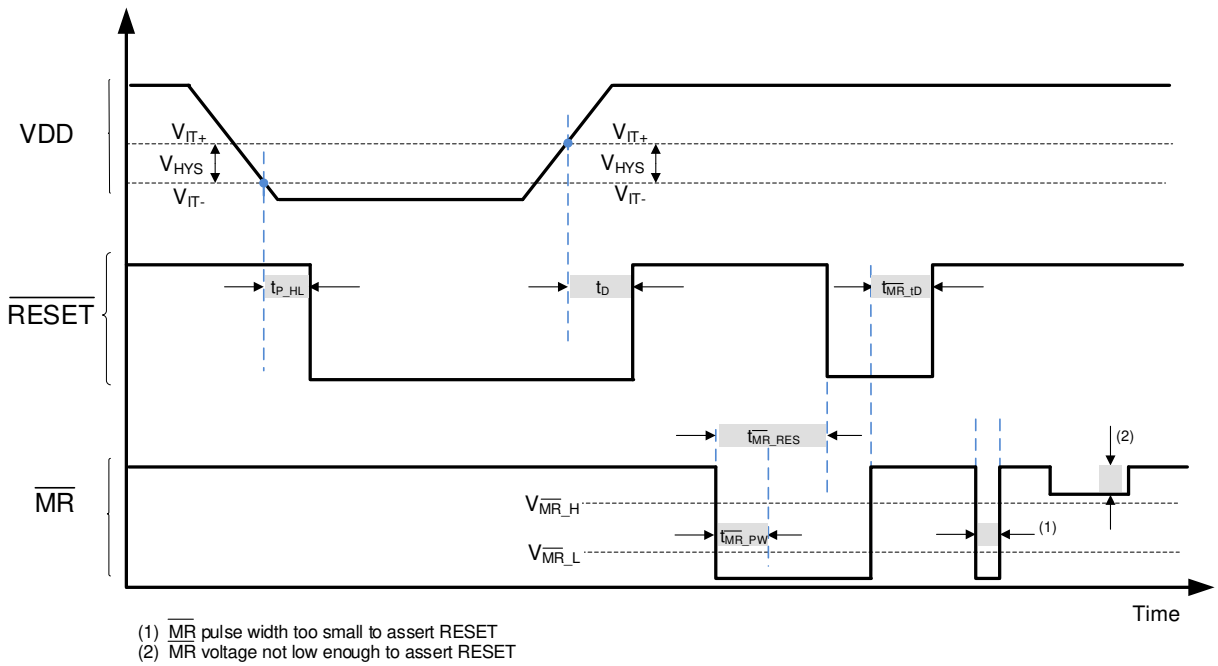

Figure 8-4. Timing Diagram $\overline{MR}$ and $\overline{RESET}$ (TLV840M)

8.3.4 Output Logic

8.3.4.1 $\overline{RESET}$ Output, Active-Low

$\overline{RESET}$ (Active-Low) applies to TLV840D**L** (Open-Drain) and TLV840P**L** (Push-Pull) hence the "**L**" in the device name. $\overline{RESET}$ remains high (deasserted) as long as VDD is above the negative threshold (V_{IT-}) and the $\overline{MR}$ pin is floating or above $V_{\overline{MR}_H}$. If VDD falls below the negative threshold (V_{IT-}) or if $\overline{MR}$ is driven low, then $\overline{RESET}$ is asserted.

When $\overline{MR}$ is again logic high or floating and VDD rise above V_{IT+}, the delay circuit will hold $\overline{RESET}$ low for the specified reset time delay (t_D). When the reset time delay has elapsed, the $\overline{RESET}$ pin goes back to logic high voltage (V_{OH}).

The TLV840DL (Open-Drain) version, denoted with "**D**" in the device name, requires a pull-up resistor to hold $\overline{RESET}$ pin high. Connect the pull-up resistor to the desired pull-up voltage source and $\overline{RESET}$ can be pulled up to any voltage up to 6.5 V independent of the VDD voltage. To ensure proper voltage levels, give some consideration when choosing the pull-up resistor values. The pull-up resistor value determines the actual V_{OL}, the output capacitive loading, and the output leakage current ($I_{lkg(OD)}$).

The Push-Pull variants (TLV840**P**L and TLV840**P**H), denoted with "**P**" in the device name, does not require an external pull-up resistor.

8.4 Device Functional Modes

Table 8-1 summarizes the various functional modes of the device. Logic high is represented by "H" and logic low is represented by "L".

Table 8-1. Truth Table

VDD	$\overline{MR}$	RESET	$\overline{RESET}$
VDD < V_{POR}	Ignored	Undefined	Undefined
V_{POR} < V_{DD} < V_{IT-}	Ignored	H	L
VDD ≥ V_{IT-}	L	H	L
VDD ≥ V_{IT-}	H	L	H
VDD ≥ V_{IT-}	Floating	L	H

8.4.1 Normal Operation (V_{DD} > VPOR)

When VDD is greater than VPOR, the reset signal is determined by the voltage on the VDD pin with respect to the trip point (V_{IT-})

- $\overline{MR}$ high: the reset signal corresponds to VDD with respect to the threshold voltage.
- $\overline{MR}$ low: in this mode, the reset is asserted regardless of the threshold voltage.

8.4.2 Below Power-On-Reset (V_{DD} < V_{POR})

When the voltage on VDD is lower than V_{POR}, the device does not have enough bias voltage to internally pull the asserted output low or high and reset voltage level is undefined.

Copyright © 2020 Texas Instruments Incorporated

9 Application and Implementation

Note

Information in the following applications sections is not part of the TI component specification, and TI does not warrant its accuracy or completeness. TI's customers are responsible for determining suitability of components for their purposes. Customers should validate and test their design implementation to confirm system functionality.

9.1 Application Information

The following sections describe in detail how to properly use this device, depending on the requirements of the final application.

9.2 Typical Application

9.2.1 Design 1: Dual Rail Monitoring with Power-up Sequencing

A typical application for the TLV840 is voltage rail monitoring and power-up sequencing as shown in Figure 9-1. The TLV840 can be used to monitor any rail above 0.9 V. In this design application, two TLV840 devices monitor two separate voltage rails and sequences the rails upon power-up. The TLV840CAPL29 is used to monitor the 3.3-V main power rail and the TLV840CADL09 is used to monitor the 1.2-V rail provided by the LDO for other system peripherals. The $\overline{\text{RESET}}$ output of the TLV840CAPL29 is connected to the ENABLE input of the LDO. A reset event is initiated on either voltage supervisor when the VDD voltage is less than V_{IT-}.

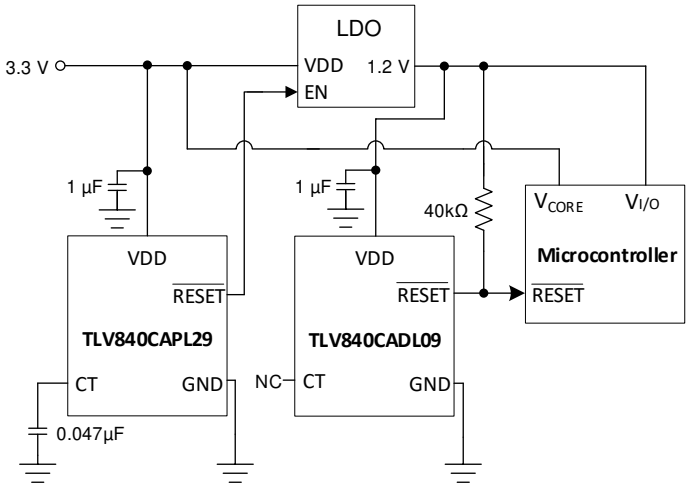

Figure 9-1. TLV840 Voltage Rail Monitor and Power-Up Sequencer Design Block Diagram

9.2.1.1 Design Requirements

This design requires voltage supervision on two separate rails: 3.3-V and 1.2-V rails. The voltage rail needs to sequence upon power up with the 3.3-V rail coming up first followed by the 1.2-V rail at least 25 ms after.

PARAMETER	DESIGN REQUIREMENT	DESIGN RESULT
Two Rail Voltage Supervision	Monitor 3.3-V and 1.2-V rails	Two TLV840 devices provide voltage monitoring with 1% accuracy with device options available in 0.1 V variations
Voltage Rail Sequencing	Power up the 3.3-V rail first followed by 1.2-V rail 25 ms after	The CT capacitor on TLV840CAPL29 is set to 0.047 µF for a reset time delay of 29 ms typical
Maximum device current consumption	1 µA	Each TLV840 requires 350 nA typical

9.2.1.2 Detailed Design Procedure

The primary constraint for this application is choosing the correct device to monitor the supply voltage of the microprocessor. The TLV840 can monitor any voltage between 0.8 V and 5.4 V. Depending on how far away from the nominal voltage rail the user wants the voltage supervisor to trigger determines the correct voltage supervisor variant to choose. In this example, the first TLV840 triggers when the 3.3-V rail falls to 2.9 V. The second TLV840 triggers a reset when the 1.2-V rail falls to 0.9 V. The secondary constraint for this application is the reset time delay that must be at least 25 ms to allow the microprocessor, and all other devices using the 3.3-V rail, enough time to startup correctly before the 1.2-V rail is enabled via the LDO. Because a minimum time is required, the user must account for capacitor tolerance. For applications with ambient temperatures ranging from –40°C to +125°C, C_{CT} can be calculated using R_{CT} and solving for C_{CT} in Equation 2. Solving Equation 2 for 25 ms gives a minimum capacitor value of 0.04 µF which is rounded up to a standard value 0.047 µF to account for capacitor tolerance.

A 1 µF decoupling capacitor is connected to the VDD pin as a good analog design practice. The pull-up resistor is only required for the Open-Drain device variants and is calculated to ensure that V_{OL} does not exceed max limit given the Isink possible at the expected supply voltage. In this design example nominal VDD is 1.2 V but dropping to 0.9 V. The *Recommended Operating Conditions* table provides 15 µA I sink for 0.7 V VDD, which is the closest voltage to this design example. Using 15 µA of Isink and 300 mV max V_{OL}, gives us 40 kΩ for the pull-up resistor. Any value higher than 40 kΩ would ensure that V_{OL} will not exceed 300 mV max specification.

9.2.1.3 Application Curves

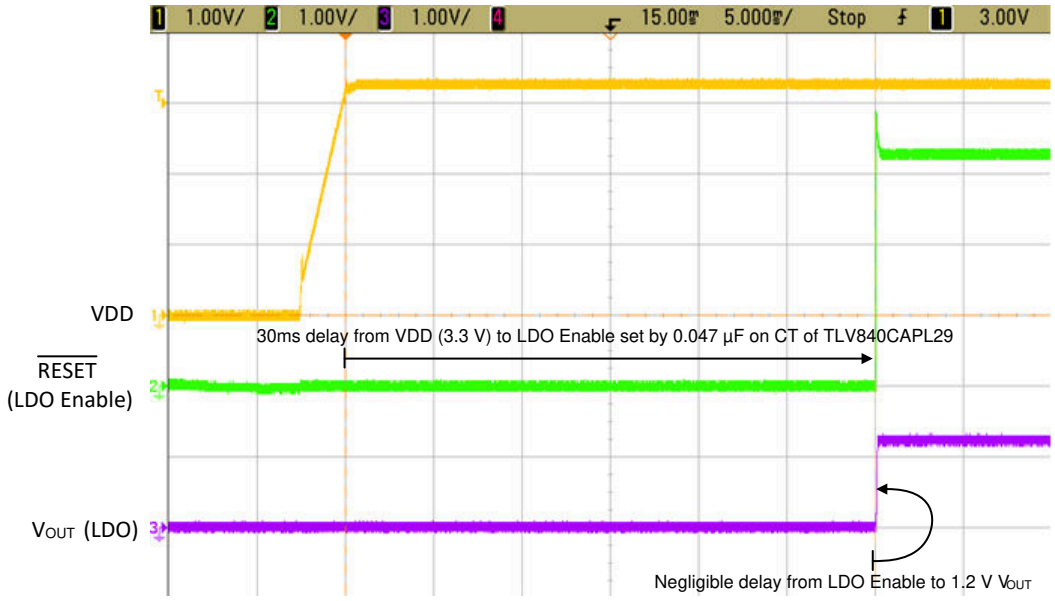

Figure 9-2. Startup Sequence Highlighting the Delay Between 3.3V and 1.2V Rails

Copyright © 2020 Texas Instruments Incorporated

9.2.2 Application Curve: TLV840EVM

These application curves are taken with the TLV840EVM. Please see the *TLV840EVM User Guide* for more information.

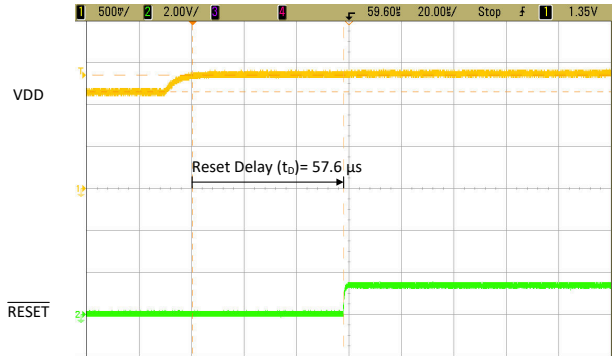

Figure 9-3. TLV840EVM $\overline{\text{RESET}}$ Time Delay (t_D) with No Capacitor

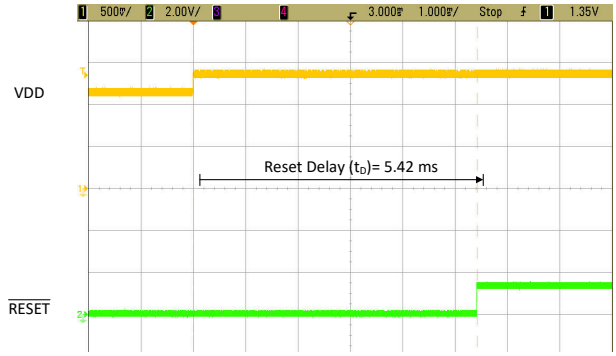

Figure 9-4. TLV840EVM $\overline{\text{RESET}}$ Time Delay (t_D) with 0.01-µF Capacitor

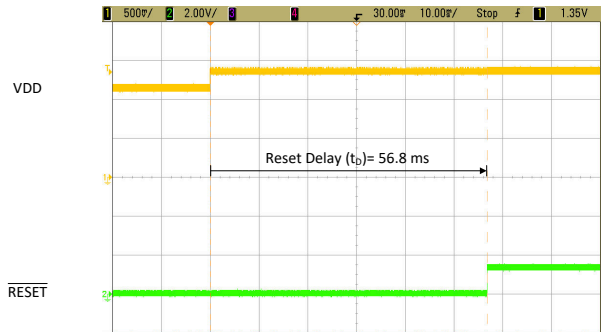

Figure 9-5. TLV840EVM $\overline{\text{RESET}}$ Time Delay (t_D) with 0.1-µF Capacitor

10 Power Supply Recommendations

These devices are designed to operate from an input supply with a voltage range between 0.7 V and 6 V. TI recommends an input supply capacitor between the VDD pin and GND pin. This device has a 6.5 V absolute maximum rating on the VDD pin. If the voltage supply providing power to VDD is susceptible to any large voltage transient that can exceed 6.5 V, additional precautions must be taken.

Copyright © 2020 Texas Instruments Incorporated

11 Layout

11.1 Layout Guidelines

Make sure that the connection to the VDD pin is low impedance. Good analog design practice recommends placing a minimum 0.1 µF ceramic capacitor as near as possible to the VDD pin. If a capacitor is not connected to the CT pin, then minimize parasitic capacitance on this pin so the rest time delay is not adversely affected.

- Make sure that the connection to the VDD pin is low impedance. Good analog design practice is to place a >0.1 µF ceramic capacitor as near as possible to the VDD pin.
- If a C_{CT} capacitor is used, place these components as close as possible to the CT pin. If the CT pin is left unconnected, make sure to minimize the amount of parasitic capacitance on the pin to <5 pF.
- Place the pull-up resistors on $\overline{\text{RESET}}$ pin as close to the pin as possible.

11.2 Layout Example

The layout example in shows how the TLV840 is laid out on a printed circuit board (PCB) with a user-defined delay.

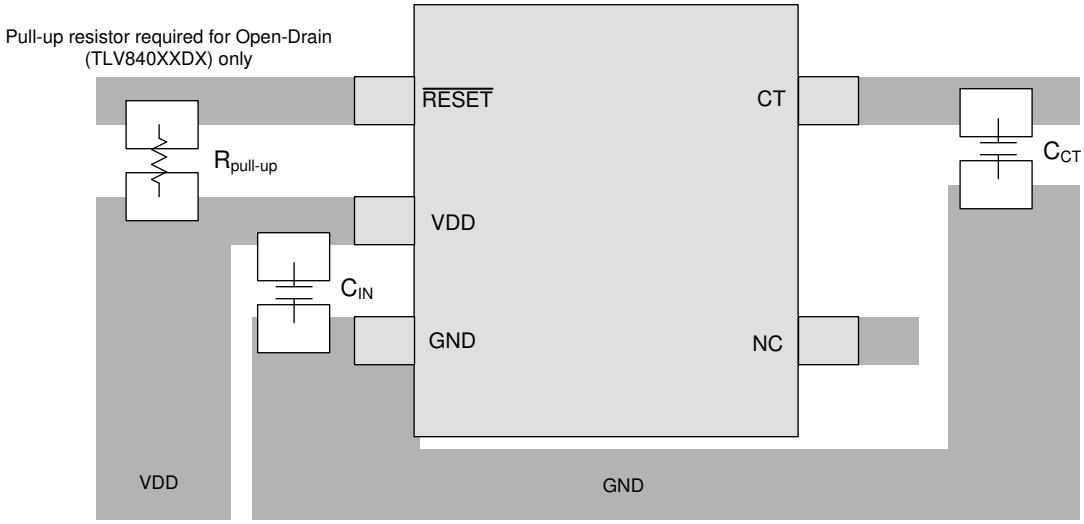

Figure 11-1. TLV840C Recommended Layout

12 Device and Documentation Support

12.1 Device Nomenclature

Table 12-1 shows how to decode the function of the device based on its part number

Table 12-1. Device Naming Convention

DESCRIPTION	NOMENCLATURE	VALUE
Generic Part number	TLV840	TLV840
Feature Option	N	No capacitor adjustable delay or manual reset options
	C [1]	CT pin for programmable delay using external capacitor
	M [1]	Manual Reset option in addition to CT pin
Delay Option	A	40 µs (No internal reset time delay)
	B	2 ms reset time delay
	C	10 ms reset time delay
	D	30 ms reset time delay
	E	50 ms reset time delay
	F	80 ms reset time delay
	G	100 ms reset time delay
	H	150 ms reset time delay
	I	200 ms reset time delay
Variant code (Output Topology)	DL	Open-Drain, Active-Low
	PL	Push-Pull, Active-Low
	DH	Open-Drain, Active-High
	PH	Push-Pull, Active-High
Detect Voltage Option	## (two characters)	Example: 12 stands for 1.2 V threshold
Package	DBV	SOT23-5
Reel	R	Large Reel

1. Orderable part numbers starting with TLV840C and TLV840M are only available with the delay option A. However, longer delays can be achieved through an external capacitor on the CT pin. Leaving the CT pin floating will result in typical 40us delay for these 2 feature options

Copyright © 2020 Texas Instruments Incorporated

12.2 Receiving Notification of Documentation Updates

To receive notification of documentation updates, navigate to the device product folder on ti.com. In the upper right corner, click on *Alert me* to register and receive a weekly digest of any product information that has changed. For change details, review the revision history included in any revised document.

12.3 Support Resources

12.4 Trademarks

All other trademarks are the property of their respective owners.

13 Mechanical, Packaging, and Orderable Information

The following pages include mechanical, packaging, and orderable information. This information is the most current data available for the designated devices. This data is subject to change without notice and revision of this document. For browser-based versions of this data sheet, refer to the left-hand navigation.

Copyright © 2020 Texas Instruments Incorporated

PACKAGING INFORMATION

Orderable part number	Status (1)	Material type (2)	Package | Pins	Package qty | Carrier	RoHS (3)	Lead finish/ Ball material (4)	MSL rating/ Peak reflow (5)	Op temp (°C)	Part marking (6)
TLV840CADL11DBVR	Active	Production	SOT-23 (DBV) | 5	3000 | LARGE T&R	Yes	NIPDAU | SN	Level-1-260C-UNLIM	-40 to 125	2CLF
TLV840CADL11DBVR.A	Active	Production	SOT-23 (DBV) | 5	3000 | LARGE T&R	Yes	NIPDAU	Level-1-260C-UNLIM	-40 to 125	2CLF
TLV840CADL14DBVR	Active	Production	SOT-23 (DBV) | 5	3000 | LARGE T&R	Yes	NIPDAU | SN	Level-1-260C-UNLIM	-40 to 125	2G1F
TLV840CADL14DBVR.A	Active	Production	SOT-23 (DBV) | 5	3000 | LARGE T&R	Yes	NIPDAU	Level-1-260C-UNLIM	-40 to 125	2G1F
TLV840CADL28DBVR	Active	Production	SOT-23 (DBV) | 5	3000 | LARGE T&R	Yes	NIPDAU | SN	Level-1-260C-UNLIM	-40 to 125	2CKF
TLV840CADL28DBVR.A	Active	Production	SOT-23 (DBV) | 5	3000 | LARGE T&R	Yes	NIPDAU	Level-1-260C-UNLIM	-40 to 125	2CKF
TLV840CADL28DBVRG4	Active	Production	SOT-23 (DBV) | 5	3000 | LARGE T&R	Yes	NIPDAU	Level-1-260C-UNLIM	-40 to 125	2CKF
TLV840CADL28DBVRG4.A	Active	Production	SOT-23 (DBV) | 5	3000 | LARGE T&R	Yes	NIPDAU	Level-1-260C-UNLIM	-40 to 125	2CKF
TLV840CADL29DBVR	Active	Production	SOT-23 (DBV) | 5	3000 | LARGE T&R	Yes	NIPDAU | SN	Level-1-260C-UNLIM	-40 to 125	2CNF
TLV840CADL29DBVR.A	Active	Production	SOT-23 (DBV) | 5	3000 | LARGE T&R	Yes	NIPDAU	Level-1-260C-UNLIM	-40 to 125	2CNF
TLV840CADL40DBVR	Active	Production	SOT-23 (DBV) | 5	3000 | LARGE T&R	Yes	NIPDAU | SN	Level-1-260C-UNLIM	-40 to 125	2ILF
TLV840CADL40DBVR.A	Active	Production	SOT-23 (DBV) | 5	3000 | LARGE T&R	Yes	NIPDAU	Level-1-260C-UNLIM	-40 to 125	2ILF
TLV840MADL08DBVR	Active	Production	SOT-23 (DBV) | 5	3000 | LARGE T&R	Yes	NIPDAU | SN	Level-1-260C-UNLIM	-40 to 125	2H6F
TLV840MADL08DBVR.A	Active	Production	SOT-23 (DBV) | 5	3000 | LARGE T&R	Yes	NIPDAU	Level-1-260C-UNLIM	-40 to 125	2H6F
TLV840MADL10DBVR	Active	Production	SOT-23 (DBV) | 5	3000 | LARGE T&R	Yes	NIPDAU | SN	Level-1-260C-UNLIM	-40 to 125	2G2F
TLV840MADL10DBVR.A	Active	Production	SOT-23 (DBV) | 5	3000 | LARGE T&R	Yes	NIPDAU	Level-1-260C-UNLIM	-40 to 125	2G2F
TLV840MADL13DBVR	Active	Production	SOT-23 (DBV) | 5	3000 | LARGE T&R	Yes	NIPDAU | SN	Level-1-260C-UNLIM	-40 to 125	2CMF
TLV840MADL13DBVR.A	Active	Production	SOT-23 (DBV) | 5	3000 | LARGE T&R	Yes	SN	Level-1-260C-UNLIM	-40 to 125	2CMF
TLV840MADL13DBVRG4	Active	Production	SOT-23 (DBV) | 5	3000 | LARGE T&R	Yes	NIPDAU	Level-1-260C-UNLIM	-40 to 125	2CMF
TLV840MADL13DBVRG4.A	Active	Production	SOT-23 (DBV) | 5	3000 | LARGE T&R	Yes	NIPDAU	Level-1-260C-UNLIM	-40 to 125	2CMF
TLV840MADL29DBVR	Active	Production	SOT-23 (DBV) | 5	3000 | LARGE T&R	Yes	NIPDAU | SN	Level-1-260C-UNLIM	-40 to 125	2G3F
TLV840MADL29DBVR.A	Active	Production	SOT-23 (DBV) | 5	3000 | LARGE T&R	Yes	SN	Level-1-260C-UNLIM	-40 to 125	2G3F
TLV840MADL30DBVR	Active	Production	SOT-23 (DBV) | 5	3000 | LARGE T&R	Yes	NIPDAU | SN	Level-1-260C-UNLIM	-40 to 125	2G4F
TLV840MADL30DBVR.A	Active	Production	SOT-23 (DBV) | 5	3000 | LARGE T&R	Yes	SN	Level-1-260C-UNLIM	-40 to 125	2G4F
TLV840MADL52DBVR	Active	Production	SOT-23 (DBV) | 5	3000 | LARGE T&R	Yes	NIPDAU | SN	Level-1-260C-UNLIM	-40 to 125	2G5F
TLV840MADL52DBVR.A	Active	Production	SOT-23 (DBV) | 5	3000 | LARGE T&R	Yes	NIPDAU	Level-1-260C-UNLIM	-40 to 125	2G5F
TLV840NADH29DBVR	Active	Production	SOT-23 (DBV) | 5	3000 | LARGE T&R	Yes	NIPDAU | SN	Level-1-260C-UNLIM	-40 to 125	2H5F
TLV840NADH29DBVR.A	Active	Production	SOT-23 (DBV) | 5	3000 | LARGE T&R	Yes	SN	Level-1-260C-UNLIM	-40 to 125	2H5F
TLV840NADL20DBVR	Active	Production	SOT-23 (DBV) | 5	3000 | LARGE T&R	Yes	NIPDAU | SN	Level-1-260C-UNLIM	-40 to 125	2G6F

Orderable part number	Status (1)	Material type (2)	Package | Pins	Package qty | Carrier	RoHS (3)	Lead finish/ Ball material (4)	MSL rating/ Peak reflow (5)	Op temp (°C)	Part marking (6)
TLV840NADL20DBVR.A	Active	Production	SOT-23 (DBV) | 5	3000 | LARGE T&R	Yes	NIPDAU	Level-1-260C-UNLIM	-40 to 125	2G6F
TLV840NADL33DBVR	Active	Production	SOT-23 (DBV) | 5	3000 | LARGE T&R	Yes	NIPDAU | SN	Level-1-260C-UNLIM	-40 to 125	2CIF
TLV840NADL33DBVR.A	Active	Production	SOT-23 (DBV) | 5	3000 | LARGE T&R	Yes	NIPDAU	Level-1-260C-UNLIM	-40 to 125	2CIF
TLV840NADL35DBVR	Active	Production	SOT-23 (DBV) | 5	3000 | LARGE T&R	Yes	NIPDAU | SN	Level-1-260C-UNLIM	-40 to 125	2CJF
TLV840NADL35DBVR.A	Active	Production	SOT-23 (DBV) | 5	3000 | LARGE T&R	Yes	NIPDAU	Level-1-260C-UNLIM	-40 to 125	2CJF
TLV840NADL46DBVR	Active	Production	SOT-23 (DBV) | 5	3000 | LARGE T&R	Yes	NIPDAU | SN	Level-1-260C-UNLIM	-40 to 125	2G7F
TLV840NADL46DBVR.A	Active	Production	SOT-23 (DBV) | 5	3000 | LARGE T&R	Yes	SN	Level-1-260C-UNLIM	-40 to 125	2G7F
TLV840NADL46DBVRG4	Active	Production	SOT-23 (DBV) | 5	3000 | LARGE T&R	Yes	NIPDAU	Level-1-260C-UNLIM	-40 to 125	2G7F
TLV840NADL46DBVRG4.A	Active	Production	SOT-23 (DBV) | 5	3000 | LARGE T&R	Yes	NIPDAU	Level-1-260C-UNLIM	-40 to 125	2G7F
TLV840NAPL50DBVR	Active	Production	SOT-23 (DBV) | 5	3000 | LARGE T&R	Yes	NIPDAU | SN	Level-1-260C-UNLIM	-40 to 125	2GOF
TLV840NAPL50DBVR.A	Active	Production	SOT-23 (DBV) | 5	3000 | LARGE T&R	Yes	NIPDAU	Level-1-260C-UNLIM	-40 to 125	2GOF

(1) **Status:** For more details on status, see our product life cycle.

(2) **Material type:** When designated, preproduction parts are prototypes/experimental devices, and are not yet approved or released for full production. Testing and final process, including without limitation quality assurance, reliability performance testing, and/or process qualification, may not yet be complete, and this item is subject to further changes or possible discontinuation. If available for ordering, purchases will be subject to an additional waiver at checkout, and are intended for early internal evaluation purposes only. These items are sold without warranties of any kind.

(3) **RoHS values:** Yes, No, RoHS Exempt. See the TI RoHS Statement for additional information and value definition.

(4) **Lead finish/Ball material:** Parts may have multiple material finish options. Finish options are separated by a vertical ruled line. Lead finish/Ball material values may wrap to two lines if the finish value exceeds the maximum column width.

(5) **MSL rating/Peak reflow:** The moisture sensitivity level ratings and peak solder (reflow) temperatures. In the event that a part has multiple moisture sensitivity ratings, only the lowest level per JEDEC standards is shown. Refer to the shipping label for the actual reflow temperature that will be used to mount the part to the printed circuit board.

(6) **Part marking:** There may be an additional marking, which relates to the logo, the lot trace code information, or the environmental category of the part.

Multiple part markings will be inside parentheses. Only one part marking contained in parentheses and separated by a "~" will appear on a part. If a line is indented then it is a continuation of the previous line and the two combined represent the entire part marking for that device.

Important Information and Disclaimer: The information provided on this page represents TI's knowledge and belief as of the date that it is provided. TI bases its knowledge and belief on information provided by third parties, and makes no representation or warranty as to the accuracy of such information. Efforts are underway to better integrate information from third parties. TI has taken and continues to take reasonable steps to provide representative

and accurate information but may not have conducted destructive testing or chemical analysis on incoming materials and chemicals. TI and TI suppliers consider certain information to be proprietary, and thus CAS numbers and other limited information may not be available for release.

In no event shall TI's liability arising out of such information exceed the total purchase price of the TI part(s) at issue in this document sold by TI to Customer on an annual basis.

OTHER QUALIFIED VERSIONS OF TLV840 :

- Automotive : TLV840-Q1

NOTE: Qualified Version Definitions:

- Automotive - Q100 devices qualified for high-reliability automotive applications targeting zero defects

TAPE AND REEL INFORMATION

REEL DIMENSIONS

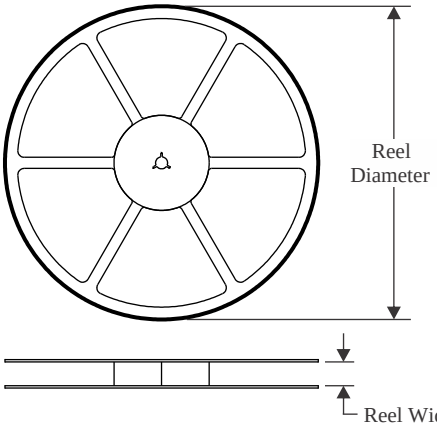

TAPE DIMENSIONS

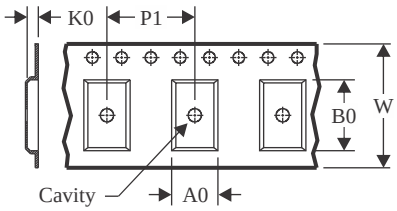

A0	Dimension designed to accommodate the component width
B0	Dimension designed to accommodate the component length
K0	Dimension designed to accommodate the component thickness
W	Overall width of the carrier tape
P1	Pitch between successive cavity centers

QUADRANT ASSIGNMENTS FOR PIN 1 ORIENTATION IN TAPE

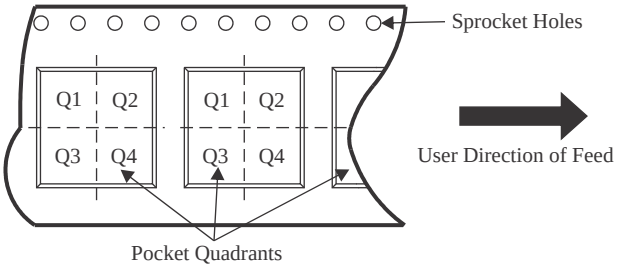

*All dimensions are nominal

Device	Package Type	Package Drawing	Pins	SPQ	Reel Diameter (mm)	Reel Width W1 (mm)	A0 (mm)	B0 (mm)	K0 (mm)	P1 (mm)	W (mm)	Pin1 Quadrant
TLV840CADL11DBVR	SOT-23	DBV	5	3000	180.0	8.4	3.2	3.2	1.4	4.0	8.0	Q3
TLV840CADL11DBVR	SOT-23	DBV	5	3000	180.0	8.4	3.2	3.2	1.4	4.0	8.0	Q3
TLV840CADL14DBVR	SOT-23	DBV	5	3000	180.0	8.4	3.2	3.2	1.4	4.0	8.0	Q3
TLV840CADL14DBVR	SOT-23	DBV	5	3000	180.0	8.4	3.2	3.2	1.4	4.0	8.0	Q3
TLV840CADL28DBVR	SOT-23	DBV	5	3000	180.0	8.4	3.2	3.2	1.4	4.0	8.0	Q3
TLV840CADL28DBVR	SOT-23	DBV	5	3000	180.0	8.4	3.2	3.2	1.4	4.0	8.0	Q3
TLV840CADL28DBVRG4	SOT-23	DBV	5	3000	180.0	8.4	3.2	3.2	1.4	4.0	8.0	Q3
TLV840CADL29DBVR	SOT-23	DBV	5	3000	180.0	8.4	3.2	3.2	1.4	4.0	8.0	Q3
TLV840CADL29DBVR	SOT-23	DBV	5	3000	180.0	8.4	3.2	3.2	1.4	4.0	8.0	Q3
TLV840CADL40DBVR	SOT-23	DBV	5	3000	178.0	8.4	3.2	3.2	1.4	4.0	8.0	Q3
TLV840MADL08DBVR	SOT-23	DBV	5	3000	180.0	8.4	3.2	3.2	1.4	4.0	8.0	Q3
TLV840MADL08DBVR	SOT-23	DBV	5	3000	180.0	8.4	3.2	3.2	1.4	4.0	8.0	Q3
TLV840MADL10DBVR	SOT-23	DBV	5	3000	180.0	8.4	3.2	3.2	1.4	4.0	8.0	Q3
TLV840MADL13DBVR	SOT-23	DBV	5	3000	180.0	8.4	3.2	3.2	1.4	4.0	8.0	Q3
TLV840MADL13DBVR	SOT-23	DBV	5	3000	180.0	8.4	3.2	3.2	1.4	4.0	8.0	Q3
TLV840MADL13DBVRG4	SOT-23	DBV	5	3000	180.0	8.4	3.2	3.2	1.4	4.0	8.0	Q3

Device	Package Type	Package Drawing	Pins	SPQ	Reel Diameter (mm)	Reel Width W1 (mm)	A0 (mm)	B0 (mm)	K0 (mm)	P1 (mm)	W (mm)	Pin1 Quadrant
TLV840MADL29DBVR	SOT-23	DBV	5	3000	180.0	8.4	3.2	3.2	1.4	4.0	8.0	Q3
TLV840MADL29DBVR	SOT-23	DBV	5	3000	180.0	8.4	3.2	3.2	1.4	4.0	8.0	Q3
TLV840MADL30DBVR	SOT-23	DBV	5	3000	180.0	8.4	3.2	3.2	1.4	4.0	8.0	Q3
TLV840MADL52DBVR	SOT-23	DBV	5	3000	180.0	8.4	3.2	3.2	1.4	4.0	8.0	Q3
TLV840MADL52DBVR	SOT-23	DBV	5	3000	180.0	8.4	3.2	3.2	1.4	4.0	8.0	Q3
TLV840NADH29DBVR	SOT-23	DBV	5	3000	180.0	8.4	3.2	3.2	1.4	4.0	8.0	Q3
TLV840NADL20DBVR	SOT-23	DBV	5	3000	178.0	8.4	3.2	3.2	1.4	4.0	8.0	Q3
TLV840NADL33DBVR	SOT-23	DBV	5	3000	178.0	8.4	3.2	3.2	1.4	4.0	8.0	Q3
TLV840NADL35DBVR	SOT-23	DBV	5	3000	180.0	8.4	3.2	3.2	1.4	4.0	8.0	Q3
TLV840NADL46DBVR	SOT-23	DBV	5	3000	180.0	8.4	3.2	3.2	1.4	4.0	8.0	Q3
TLV840NADL46DBVR	SOT-23	DBV	5	3000	180.0	8.4	3.2	3.2	1.4	4.0	8.0	Q3
TLV840NADL46DBVRG4	SOT-23	DBV	5	3000	180.0	8.4	3.2	3.2	1.4	4.0	8.0	Q3
TLV840NAPL50DBVR	SOT-23	DBV	5	3000	180.0	8.4	3.2	3.2	1.4	4.0	8.0	Q3
TLV840NAPL50DBVR	SOT-23	DBV	5	3000	180.0	8.4	3.2	3.2	1.4	4.0	8.0	Q3

TAPE AND REEL BOX DIMENSIONS

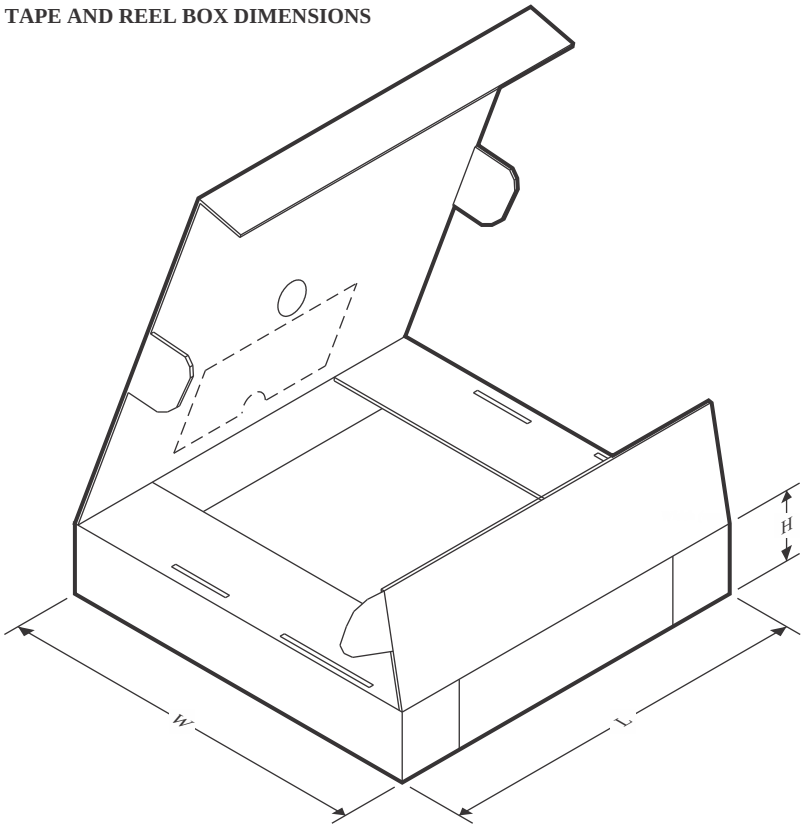

*All dimensions are nominal

Device	Package Type	Package Drawing	Pins	SPQ	Length (mm)	Width (mm)	Height (mm)
TLV840CADL11DBVR	SOT-23	DBV	5	3000	210.0	185.0	35.0
TLV840CADL11DBVR	SOT-23	DBV	5	3000	210.0	185.0	35.0
TLV840CADL14DBVR	SOT-23	DBV	5	3000	210.0	185.0	35.0
TLV840CADL14DBVR	SOT-23	DBV	5	3000	210.0	185.0	35.0
TLV840CADL28DBVR	SOT-23	DBV	5	3000	210.0	185.0	35.0
TLV840CADL28DBVR	SOT-23	DBV	5	3000	210.0	185.0	35.0
TLV840CADL28DBVRG4	SOT-23	DBV	5	3000	210.0	185.0	35.0
TLV840CADL29DBVR	SOT-23	DBV	5	3000	210.0	185.0	35.0
TLV840CADL29DBVR	SOT-23	DBV	5	3000	210.0	185.0	35.0
TLV840CADL40DBVR	SOT-23	DBV	5	3000	208.0	191.0	35.0
TLV840MADL08DBVR	SOT-23	DBV	5	3000	210.0	185.0	35.0
TLV840MADL08DBVR	SOT-23	DBV	5	3000	210.0	185.0	35.0
TLV840MADL10DBVR	SOT-23	DBV	5	3000	210.0	185.0	35.0
TLV840MADL13DBVR	SOT-23	DBV	5	3000	210.0	185.0	35.0
TLV840MADL13DBVR	SOT-23	DBV	5	3000	210.0	185.0	35.0
TLV840MADL13DBVRG4	SOT-23	DBV	5	3000	210.0	185.0	35.0
TLV840MADL29DBVR	SOT-23	DBV	5	3000	210.0	185.0	35.0
TLV840MADL29DBVR	SOT-23	DBV	5	3000	210.0	185.0	35.0

Device	Package Type	Package Drawing	Pins	SPQ	Length (mm)	Width (mm)	Height (mm)
TLV840MADL30DBVR	SOT-23	DBV	5	3000	210.0	185.0	35.0
TLV840MADL52DBVR	SOT-23	DBV	5	3000	210.0	185.0	35.0
TLV840MADL52DBVR	SOT-23	DBV	5	3000	210.0	185.0	35.0
TLV840NADH29DBVR	SOT-23	DBV	5	3000	210.0	185.0	35.0
TLV840NADL20DBVR	SOT-23	DBV	5	3000	208.0	191.0	35.0
TLV840NADL33DBVR	SOT-23	DBV	5	3000	208.0	191.0	35.0
TLV840NADL35DBVR	SOT-23	DBV	5	3000	210.0	185.0	35.0
TLV840NADL46DBVR	SOT-23	DBV	5	3000	210.0	185.0	35.0
TLV840NADL46DBVR	SOT-23	DBV	5	3000	210.0	185.0	35.0
TLV840NADL46DBVRG4	SOT-23	DBV	5	3000	210.0	185.0	35.0
TLV840NAPL50DBVR	SOT-23	DBV	5	3000	210.0	185.0	35.0
TLV840NAPL50DBVR	SOT-23	DBV	5	3000	210.0	185.0	35.0

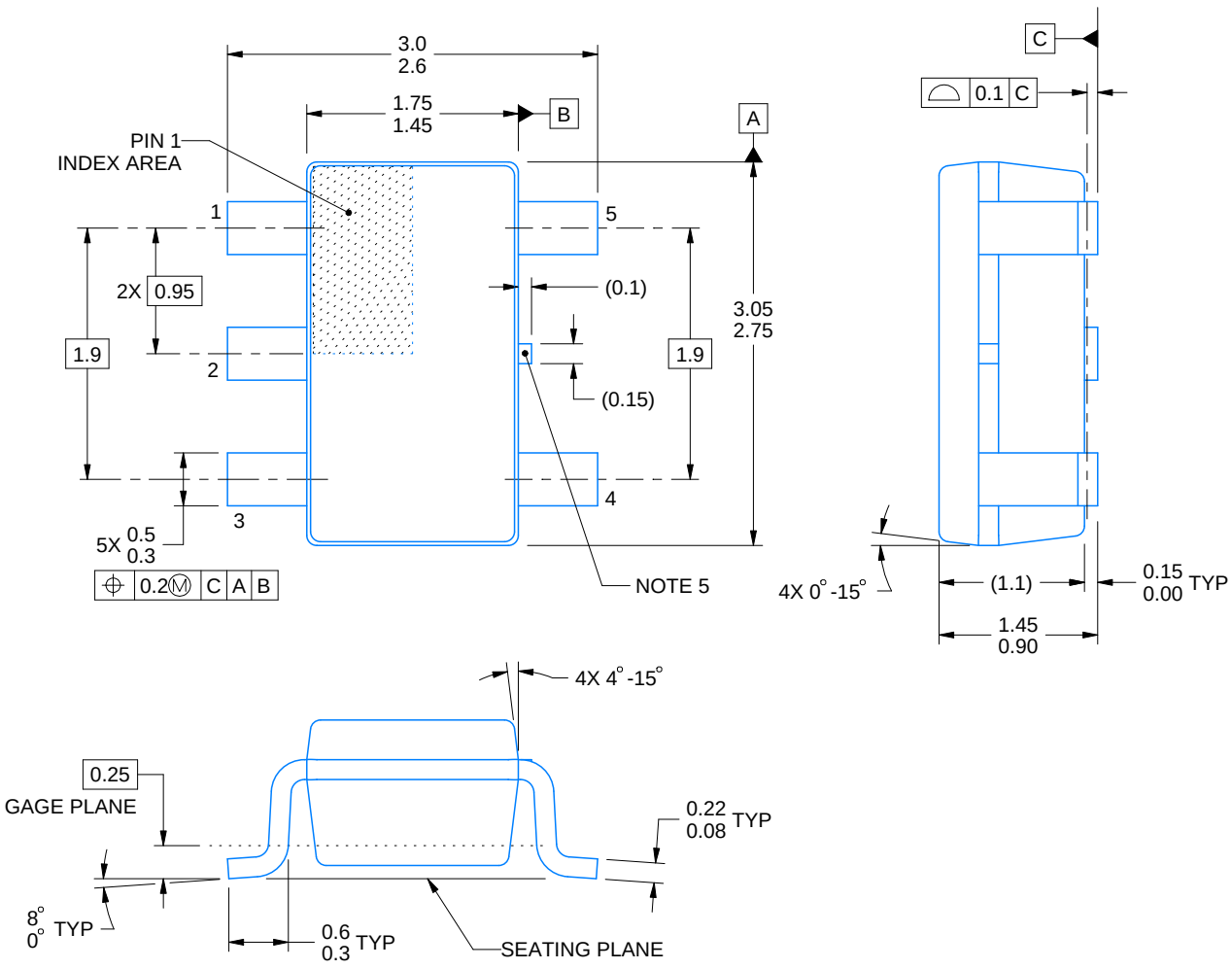

4214839/K 08/2024

NOTES:

1. All linear dimensions are in millimeters. Any dimensions in parenthesis are for reference only. Dimensioning and tolerancing per ASME Y14.5M.
2. This drawing is subject to change without notice.
3. Refernce JEDEC MO-178.
4. Body dimensions do not include mold flash, protrusions, or gate burrs. Mold flash, protrusions, or gate burrs shall not exceed 0.25 mm per side.
5. Support pin may differ or may not be present.

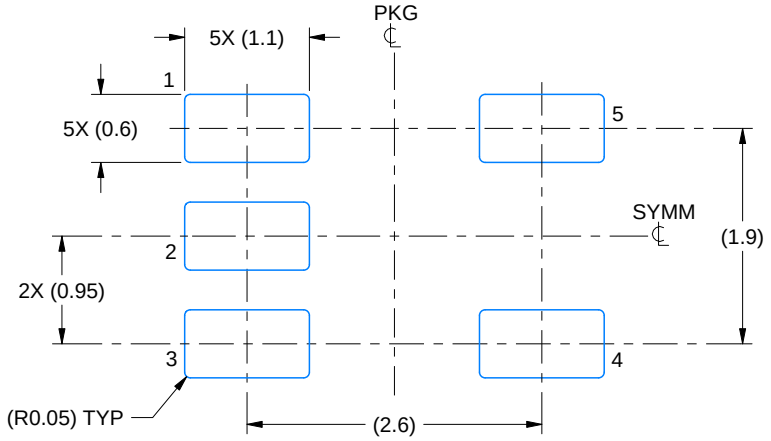

LAND PATTERN EXAMPLE
EXPOSED METAL SHOWN
SCALE:15X

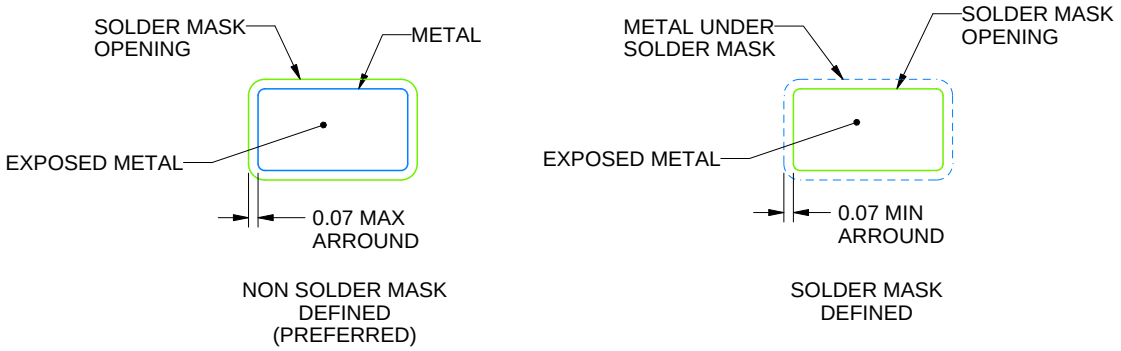

SOLDER MASK DETAILS

4214839/K 08/2024

NOTES: (continued)

6. Publication IPC-7351 may have alternate designs.
7. Solder mask tolerances between and around signal pads can vary based on board fabrication site.

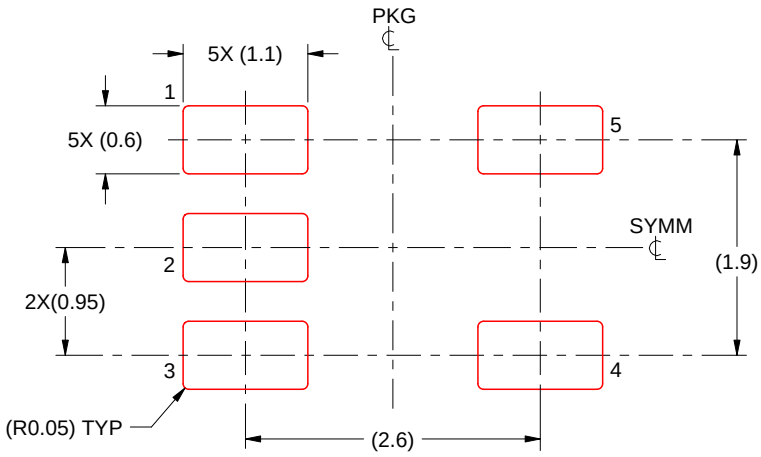

SOLDER PASTE EXAMPLE
BASED ON 0.125 mm THICK STENCIL
SCALE:15X

4214839/K 08/2024

NOTES: (continued)

8. Laser cutting apertures with trapezoidal walls and rounded corners may offer better paste release. IPC-7525 may have alternate design recommendations.
9. Board assembly site may have different recommendations for stencil design.

IMPORTANT NOTICE AND DISCLAIMER

TI PROVIDES TECHNICAL AND RELIABILITY DATA (INCLUDING DATA SHEETS), DESIGN RESOURCES (INCLUDING REFERENCE DESIGNS), APPLICATION OR OTHER DESIGN ADVICE, WEB TOOLS, SAFETY INFORMATION, AND OTHER RESOURCES “AS IS” AND WITH ALL FAULTS, AND DISCLAIMS ALL WARRANTIES, EXPRESS AND IMPLIED, INCLUDING WITHOUT LIMITATION ANY IMPLIED WARRANTIES OF MERCHANTABILITY, FITNESS FOR A PARTICULAR PURPOSE OR NON-INFRINGEMENT OF THIRD PARTY INTELLECTUAL PROPERTY RIGHTS.

These resources are intended for skilled developers designing with TI products. You are solely responsible for (1) selecting the appropriate TI products for your application, (2) designing, validating and testing your application, and (3) ensuring your application meets applicable standards, and any other safety, security, regulatory or other requirements.

These resources are subject to change without notice. TI grants you permission to use these resources only for development of an application that uses the TI products described in the resource. Other reproduction and display of these resources is prohibited. No license is granted to any other TI intellectual property right or to any third party intellectual property right. TI disclaims responsibility for, and you will fully indemnify TI and its representatives against, any claims, damages, costs, losses, and liabilities arising out of your use of these resources.

TI’s products are provided subject to TI’s Terms of Sale or other applicable terms available either on ti.com or provided in conjunction with such TI products. TI’s provision of these resources does not expand or otherwise alter TI’s applicable warranties or warranty disclaimers for TI products.

TI objects to and rejects any additional or different terms you may have proposed.

Mailing Address: Texas Instruments, Post Office Box 655303, Dallas, Texas 75265
Copyright © 2025, Texas Instruments Incorporated