CDx4HC405x, CD4HCT405x High-Speed CMOS Logic Analog Multiplexer and Demultiplexer

1 Features

- Qualified for automotive applications
- Wide analog input voltage range: ±5V maximum
- Low ON-resistance:
  - 70Ω typical ($V_{CC} – V_{EE}$ = 4.5V)
  - 40Ω typical ($V_{CC} – V_{EE}$ = 9V)
- Low crosstalk between switches
- Fast switching and propagation speeds
- Break-before-make switching
- Wide operating temperature range: –40°C to +125°C
- Operation control voltage: 4.5V to 5.5V
- Switch voltage: 0V to 10V
- Direct LSTTL input logic compatibility V_{IL} = 0.8V maximum, V_{IH} = 2V minimum
- CMOS input compatibility I_I ≤ 1μA at V_{OL}, V_{OH}

2 Applications

- Digital radio
- Signal gating
- Factory automation
- Televisions
- Appliances
- Programmable logic circuits
- Sensors

3 Description

The CDx4HC405x and CDx4HCT405x device is a digitally controlled analog switch that uses silicon gate CMOS technology to achieve operating speeds similar to LSTTL with the low-power consumption of standard CMOS integrated circuits.

This analog multiplexer and demultiplexer controls analog voltages that may vary across the voltage supply range (for example, V_{CC} to V_{EE}). It is a bidirectional switch that allows any analog input to be used as an output and vice versa. The switch has low ON resistance and low OFF leakages. In addition, this device has an enable control that, when high, disables all switches to their OFF state.

Device Information

PART NUMBER	T_A	PACKAGE(1)	PACKAGE SIZE(2)
CD54HCx405x	-55°C to 125°C	J (CDIP, 16)	19.56mm × 6.92mm
CD74HCx405x		N (PDIP, 16)	19.30mm × 6.35mm
		D (SOIC, 16)	9.9mm × 3.9mm
		NS (SOP, 16)	10.3mm × 5.3mm
		PW (TSSOP, 16)	5mm × 4.4mm

(1) For more information, see Section 11.
(2) The package size (length × width) is a nominal value and includes pins, where applicable.

An IMPORTANT NOTICE at the end of this data sheet addresses availability, warranty, changes, use in safety-critical applications, intellectual property matters and other important disclaimers. PRODUCTION DATA.

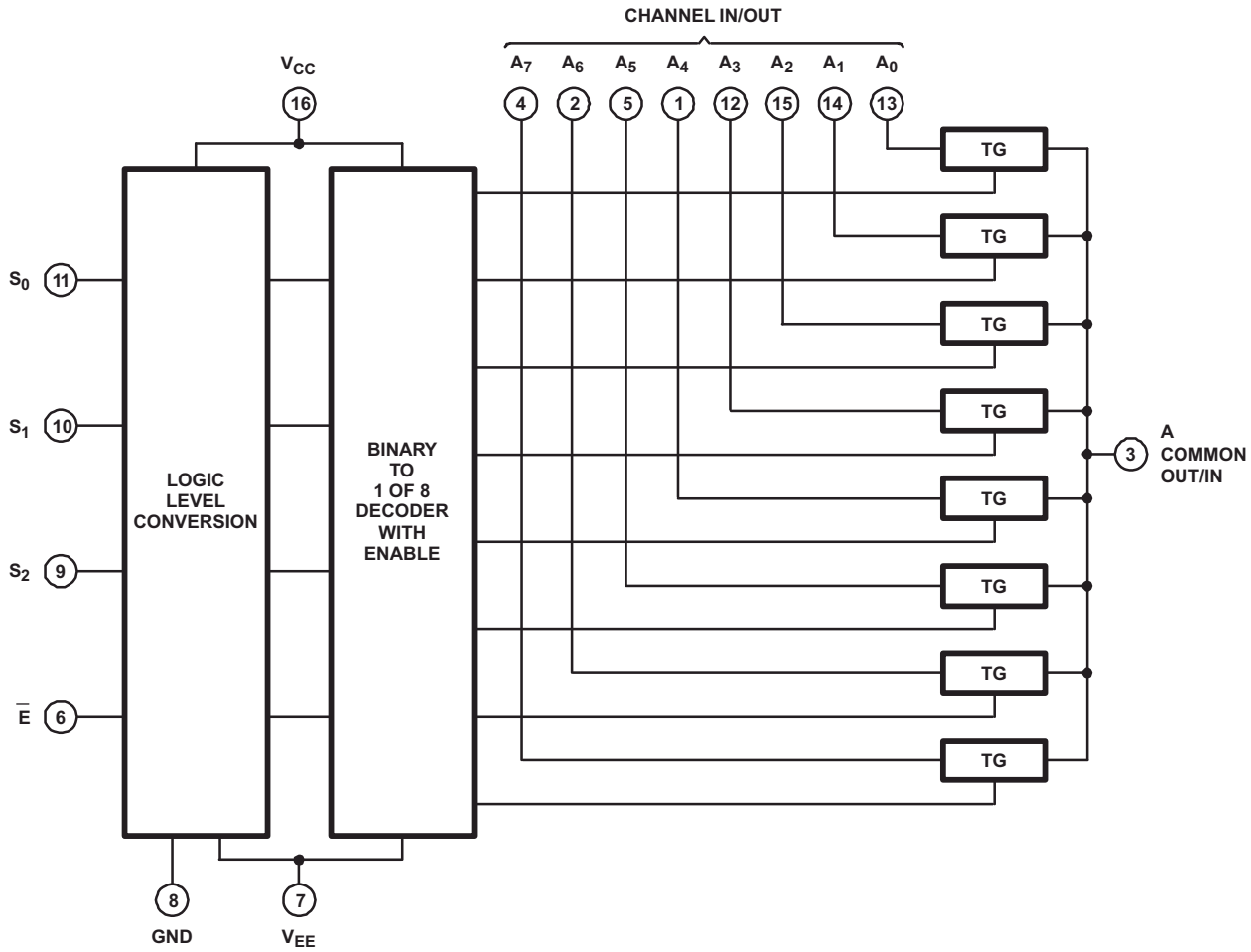

Functional Diagram of HCT4051

Copyright © 2024 Texas Instruments Incorporated

Table of Contents

1 Features....1
2 Applications....1
3 Description....1
4 Pin Configuration and Functions....4
5 Specifications....7
5.1 Absolute Maximum Ratings....7
5.2 ESD Ratings....7
5.3 Thermal Information....8
5.4 Recommended Operating Conditions....8
5.5 Electrical Characteristics: HC Devices....9
5.6 Electrical Characteristics: HCT Devices....12
5.7 Switching Characteristics, VCC = 5V....14
5.8 Switching Characteristics, CL = 50pF....15
5.9 Analog Channel Specifications....18
5.10 Typical Characteristics....20
6 Parameter Measurement Information....21
7 Detailed Description....24
7.1 Overview....24
7.2 Functional Block Diagrams....24
7.3 Feature Description....26
7.4 Device Functional Modes....26
8 Application and Implementation....27
8.1 Application Information....27
8.2 Typical Application....27
8.3 Power Supply Recommendations....28
8.4 Layout....29
9 Device and Documentation Support....30
9.1 Documentation Support....30
9.2 Receiving Notification of Documentation Updates....30
9.3 Support Resources....30
9.4 Trademarks....30
9.5 Electrostatic Discharge Caution....30
9.6 Glossary....30
10 Revision History....30
11 Mechanical, Packaging, and Orderable Information....31

4 Pin Configuration and Functions

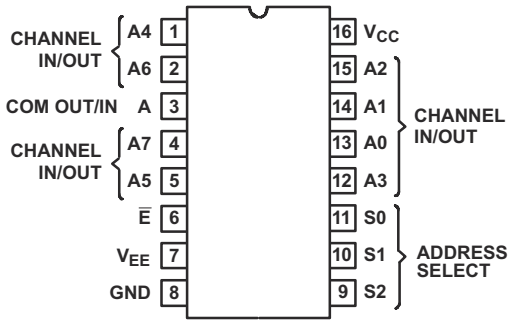

Figure 4-1. CDx4HCx4051 J, N, D, NS, PW Packages 16-Pin CDIP, PDIP, SOIC, SO, TSSOP (Top View)

Table 4-1. Pin Functions for CDxHCx4051B

PIN		TYPE[(1)]	DESCRIPTION
NAME	NO.		
CH A4 IN/OUT	1	I/O	Channel 4 in/out
CH A6 IN/OUT	2	I/O	Channel 6 in/out
COM OUT/IN	3	I/O	Common out/in
CH A7 IN/OUT	4	I/O	Channel 7 in/out
CH A5 IN/OUT	5	I/O	Channel 5 in/out
!E	6	I	Enable Channels (Active Low)
V_{EE}	7	—	Negative power input
GND	8	—	Ground
S2	9	I	Channel select 2
S1	10	I	Channel select 1
S0	11	I	Channel select 0
CH A3 IN/OUT	12	I/O	Channel 3 in/out
CH A0 IN/OUT	13	I/O	Channel 0 in/out
CH A1 IN/OUT	14	I/O	Channel 1 in/out
CH A2 IN/OUT	15	I/O	Channel 2 in/out
V_{CC}	16	—	Positive power input

(1) I = input, O = output

Copyright © 2024 Texas Instruments Incorporated

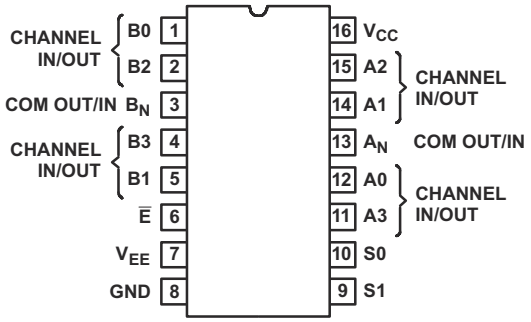

Figure 4-2. CDx4HCx4052 J, N, D, NS, PW Packages 16-Pin CDIP, PDIP, SOIC, SO, TSSOP (Top View)

Table 4-2. Pin Functions for CDx4HCx4052B

PIN		TYPE[(1)]	DESCRIPTION
NAME	NO.		
CH B0 IN/OUT	1	I/O	Channel B0 in/out
CH B2 IN/OUT	2	I/O	Channel B2 in/out
COM B OUT/IN	3	I/O	B common out/in
CH B3 IN/OUT	4	I/O	Channel B3 in/out
CH B1 IN/OUT	5	I/O	Channel B1 in/out
!E	6	I	Enable channels (Active Low)
V_{EE}	7	—	Negative power input
GND	8	—	Ground
S1	9	I	Channel select 1
S0	10	I	Channel select 0
CH A3 IN/OUT	11	I/O	Channel A3 in/out
CH A0 IN/OUT	12	I/O	Channel A0 in/out
COM A IN/OUT	13	I/O	A common out/in
CH A1 IN/OUT	14	I/O	Channel A1 in/out
CH A2 IN/OUT	15	I/O	Channel A2 in/out
V_{CC}	16	—	Positive power input

(1) I = input, O = output

Copyright © 2024 Texas Instruments Incorporated

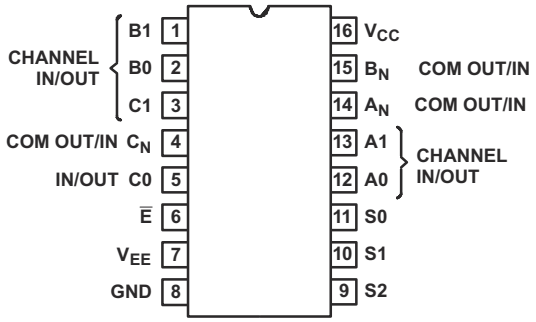

Figure 4-3. CDx4HCx4053 J, N, D, NS, PW Packages 16-Pin CDIP, PDIP, SOIC, SO, TSSOP (Top View)

Table 4-3. Pin Functions CDx4HCx4053B

PIN		TYPE(1)	DESCRIPTION
NAME	NO.		
B1IN/OUT	1	I/O	B channel Y in/out
B0 IN/OUT	2	I/O	B channel X in/out
C1 IN/OUT	3	I/O	C channel Y in/out
COM C OUT/IN	4	I/O	C common out/in
C0 IN/OUT	5	I/O	C channel X in/out
!E	6	I	Enable channels (Active Low)
V_{EE}	7	—	Negative power input
GND	8	—	Ground
S2	9	I	Channel select 2
S1	10	I	Channel select 1
S0	11	I	Channel select 0
A0 IN/OUT	12	I/O	A channel X in/out
A1 IN/OUT	13	I/O	A channel Y in/out
COM A OUT/IN	14	I/O	A common out/in
COM B OUT/IN	15	I/O	B common out/in
V_{CC}	16	—	Positive power input

(1) I = input, O = output

Copyright © 2024 Texas Instruments Incorporated

5 Specifications

5.1 Absolute Maximum Ratings

over operating free-air temperature range (unless otherwise noted)[1]

			MIN	MAX	UNIT
$V_{CC} – V_{EE}$	DC Supply voltage		-0.5	10.5	V
V_{CC}			–0.5	7	V
V_{EE}			0.5	-7	V
I_{IK}	DC input diode current	$V_I < – 0.5V$ or $V_I > V_{CC} + 0.5V$	–20	20	mA
I_{OK}	DC switch diode current	$V_I < V_{EE} – 0.5V$ or $V_I > V_{CC} + 0.5V$	–20	20	mA
	DC switch current[2]	$V_I < V_{EE} – 0.5V$ or $V_I > V_{CC} + 0.5V$	-25	25	mA
I_{CC}	DC V_{CC} or ground current		–50	50	mA
I_{EE}	DC V_{EE} current		–20		mA
V_{SEL} or V_{EN}	Logic control input pin voltage ($\overline{EN}$, Ax, SELx)		–0.5	30	V
T_{JMAX}	Maximum junction temperature			150	°C
T_{LMAX}	Maximum lead temperature	Soldering 10 s		300	°C
T_{stg}	Storage temperature		–65	150	°C

(1) Stresses beyond those listed under *Absolute Maximum Rating* may cause permanent damage to the device. These are stress ratings only, which do not imply functional operation of the device at these or any other conditions beyond those indicated under *Recommended Operating Condition*. Exposure to absolute-maximum-rated conditions for extended periods may affect device reliability.
(2) All voltages are with respect to ground, unless otherwise specified.

5.2 ESD Ratings

			VALUE	UNIT
$V_{(ESD)}$	Electrostatic discharge	Human body model (HBM), per ANSI/ESDA/JEDEC JS-001, all pins[1]	±500	V
		Charged device model (CDM), per JEDEC specification JESD22-C101, all pins[2]	±200	

(1) JEDEC document JEP155 states that 500-V HBM allows safe manufacturing with a standard ESD control process.
(2) JEDEC document JEP157 states that 250-V CDM allows safe manufacturing with a standard ESD control process.

Copyright © 2024 Texas Instruments Incorporated

5.3 Thermal Information

THERMAL METRIC[1]		CD74HC4051			UNIT
		N (PDIP)	NS (SO)	PW (TSSOP)	
		16 PINS	16 PINS	16 PINS	
$R_{\theta JA}$	Junction-to-ambient thermal resistance	77.3	99.3	116.5	°C/W
$R_{\theta JC(top)}$	Junction-to-case (top) thermal resistance	56.2	59.6	51.9	°C/W
$R_{\theta JB}$	Junction-to-board thermal resistance	52.6	65.7	73.9	°C/W
Ψ_{JT}	Junction-to-top characterization parameter	33.7	21.5	4.7	°C/W
Ψ_{JB}	Junction-to-board characterization parameter	52.1	65.1	73.2	°C/W

(1) For more information about traditional and new thermal metrics, see the Semiconductor and IC Package Thermal Metrics application report.

5.4 Recommended Operating Conditions

over operating free-air temperature range (unless otherwise noted)[1]

			MIN	NOM	MAX	UNIT
V_{CC}	Supply voltage range (T_A = full package temperature range)[2]	CD54 and 74HC types	2		6	V
		CD54 and 74HCT types	4.5		5.5	
$V_{CC} – V_{EE}$	Supply voltage range (T_A = full package temperature range)	CD54 and 74HC types, CD54 and 74HCT types	2		10	V
V_{EE}	Supply voltage range (T_A = full package temperature range)[3]	CD54 and 74HC types, CD54 and 74HCT types	0		–6	V
V_I	DC input control voltage		0		V_{CC}	V
V_{IS}	Analog switch I/O voltage		V_{EE}		V_{CC}	V
T_A	Ambient temperature		–55		125	°C
t_r , t_f	Input rise and fall times	2V	0		1000	ns
		4.5V	0		500	
		6V	0		400	

(1) For maximum reliability, nominal operating conditions must be selected so that operation is always within the ranges specified in the *Recommended Operating Conditions* table.
(2) All voltages referenced to GND unless otherwise specified.
(3) In certain applications, the external load resistor current may include both V_{CC} and signal line components. To avoid drawing V_{CC} current when switch current flows into the transmission gate inputs, the voltage drop across the bidirectional switch must not exceed 0.6V (calculated from r_{ON} values shown in *Electrical Characteristics HC* and *Electrical Characteristics HCT* tables). No V_{CC} current will flow through R_L if the switch current flows into terminal 3 on the HC and HCT40511; terminals 3 and 13 on the HC and HCT4052; terminals 4, 14, and 15 on the HC and HCT4053.

Copyright © 2024 Texas Instruments Incorporated

5.5 Electrical Characteristics: HC Devices

Over operating free-air temperature range, V_{SUPPLY} = ±5V, and R_L = 100Ω, (unless otherwise noted)

PARAMETER	TEST CONDITIONS						MIN	TYP	MAX	UNIT
CD74HC405x										
		V_{IS} (V)	V_I (V)	V_{EE} (V)	V_{CC} (V)	T_A				
Input High Voltage, V_{IH}, Min					2	25°C	1.5			V
						–40°C to +85°C	1.5			
						–55°C to +125°C	1.5			
					4.5	25°C	3.15			
						–40°C to +85°C	3.15			
						–55°C to +125°C	3.15			
					6	25°C	4.2			
						–40°C to +85°C	4.2			
						–55°C to +125°C	4.2			
Input Low Voltage, V_{IL}, Max					2	25°C			0.5	V
						–40°C to +85°C			0.5	
						–55°C to +125°C			0.5	
					4.5	25°C			1.35	
						–40°C to +85°C			1.35	
						–55°C to +125°C			1.35	
					6	25°C			1.8	
						–40°C to +85°C			1.8	
						–55°C to +125°C			1.8	

Copyright © 2024 Texas Instruments Incorporated

5.5 Electrical Characteristics: HC Devices (continued)

Over operating free-air temperature range, V_{SUPPLY} = ±5V, and R_L = 100Ω, (unless otherwise noted)

PARAMETER	TEST CONDITIONS						MIN	TYP	MAX	UNIT
r_{ON} ON resistance	I_O = 1mA	V_{CC} or V_{EE}	V_{IL} or V_{IH}	0	4.5	25°C		70	160	Ω
						–40°C to +85°C			200	
						–55°C to +125°C			240	
				0	6	25°C		60	140	
						–40°C to +85°C			175	
						–55°C to +125°C			210	
				-4.5	4.5	25°C		40	120	
						–40°C to +85°C			150	
						–55°C to +125°C			180	
		V_{CC} to V_{EE}		0	4.5	25°C		90	180	Ω
						–40°C to +85°C			225	
						–55°C to +125°C			270	
				0	6	25°C		80	160	
						–40°C to +85°C			200	
						–55°C to +125°C			240	
				-4.5	4.5	25°C		45	130	
						–40°C to +85°C			162	
						–55°C to +125°C			195	
Δr_{ON} Maximum ON resistance between any two channels				0	4.5	25°C		10		Ω
				0	6	25°C		8.5		
				-4.5	4.5	25°C		5		

Copyright © 2024 Texas Instruments Incorporated

5.5 Electrical Characteristics: HC Devices (continued)

Over operating free-air temperature range, V_{SUPPLY} = ±5V, and R_L = 100Ω, (unless otherwise noted)

PARAMETER	TEST CONDITIONS						MIN	TYP	MAX	UNIT
I_{IZ} Switch ON/OFF leakage current	1 and 2 channels	For switch OFF: When $V_{IS} = V_{CC}$, $V_{OS} = V_{EE}$; When $V_{IS} = V_{EE}$, $V_{OS} = V_{CC}$, For switch ON: All applicable combinations of V_{IS} and V_{OS} voltage levels	V_{IL} or V_{IH}	0	6	25°C			±0.1	μA
						–55°C to 85°C			±1	
						–55°C to 125°C			±1	
	4053			-5	5	25°C			±0.1	
						–55°C to 85°C			±1	
						–55°C to 125°C			±1	
	4 channels			0	6	25°C			±0.1	
						–55°C to 85°C			±1	
						–55°C to 125°C			±1	
	4052			-5	5	25°C			±0.2	
						–55°C to 85°C			±2	
						–55°C to 125°C			±2	
	8 channels			0	6	25°C			±0.2	
						–55°C to 85°C			±2	
						–55°C to 125°C			±2	
	4051			-5	5	25°C			±0.4	
						–55°C to 85°C			±4	
						–55°C to 125°C			±4	
I_{IL} Control input leakage current			V_{CC} or GND	0	6	25°C			±0.1	μA
						–55°C to 85°C			±1	
						–55°C to 125°C			±1	
Quiescent Device Current, I_{CC} Max	I_O = 0	When $V_{IS} = V_{EE}$, $V_{OS} = V_{CC}$	V_{CC} or GND	0	6	25°C		12		μA
						–55°C to 85°C		80		
						–55°C to 125°C		160		
		When $V_{IS} = V_{CC}$, $V_{OS} = V_{EE}$		-5	5	25°C		32		
						–55°C to 85°C		160		
						–55°C to 125°C		320		

5.6 Electrical Characteristics: HCT Devices

Over operating free-air temperature range, V_{SUPPLY} = ±5V, and R_L = 100Ω, (unless otherwise noted)[1]

PARAMETER	TEST CONDITIONS						MIN	TYP	MAX	UNIT
CD74HCT405x										
		V_{IS} (V)	**V_I (V)**	**V_{EE} (V)**	**V_{CC} (V)**	**T_A**				
Input High Voltage, V_{IH}, Min					4.5 to 5.5	25°C	2			V
						–40°C to +85°C	2			
						–55°C to +125°C	2			
Input Low Voltage, V_{IL}, Max					4.5 to 5.5	25°C			0.8	V
						–40°C to +85°C			0.8	
						–55°C to +125°C			0.8	
r_{ON} ON resistance	I_O = 1mA	V_{CC} or V_{EE}	V_{IL} or V_{IH}	0	4.5	25°C		70	160	Ω
						–40°C to +85°C			200	
						–55°C to +125°C			240	
				-4.5	4.5	25°C		40	120	
						–40°C to +85°C			150	
						–55°C to +125°C			180	
		V_{CC} to V_{EE}		0	4.5	25°C		90	180	
						–40°C to +85°C			225	
						–55°C to +125°C			270	
				-4.5	4.5	25°C		45	130	Ω
						–40°C to +85°C			162	
						–55°C to +125°C			195	
Δr_{ON} Maximum ON resistance between any two channels				0	4.5	25°C		10		Ω
				-4.5	4.5	25°C		5		

Copyright © 2024 Texas Instruments Incorporated

5.6 Electrical Characteristics: HCT Devices (continued)

Over operating free-air temperature range, V_{SUPPLY} = ±5V, and R_L = 100Ω, (unless otherwise noted)[1]

PARAMETER	TEST CONDITIONS						MIN	TYP	MAX	UNIT
I_{IZ} Switch ON/OFF leakage current	1 and 2 channels	For switch OFF: When V_{IS} = V_{CC}, V_{OS} = V_{EE}; When V_{IS} = V_{EE}, V_{OS} = V_{CC}, For switch ON: All applicable combinations of V_{IS} and V_{OS} voltage levels	V_{IL} or V_{IH}	0	6	25°C			±0.1	μA
						–55°C to 85°C			±1	
						–55°C to 125°C			±1	
	4053			-5	5	25°C			±0.1	
						–55°C to 85°C			±1	
						–55°C to 125°C			±1	
	4 channels			0	6	25°C			±0.1	
						–55°C to 85°C			±1	
						–55°C to 125°C			±1	
	4052			-5	5	25°C			±0.2	
						–55°C to 85°C			±2	
						–55°C to 125°C			±2	
	8 channels			0	6	25°C			±0.2	
						–55°C to 85°C			±2	
						–55°C to 125°C			±2	
	4051			-5	5	25°C			±0.4	
						–55°C to 85°C			±4	
						–55°C to 125°C			±4	
I_{IL} Control input leakage current			See[1]	0	5.5	25°C			±0.1	μA
						–55°C to 85°C			±1	
						–55°C to 125°C			±1	
Quiescent Device Current, I_{CC} Max	I_O = 0	When V_{IS} = V_{EE}, V_{OS} = V_{CC}	V_{CC} or GND	0	5.5	25°C			12	μA
						–55°C to 85°C			80	
						–55°C to 125°C			160	
		When V_{IS} = V_{CC}, V_{OS} = V_{EE}		-4.5	5.5	25°C			32	
						–55°C to 85°C			160	
						–55°C to 125°C			320	
ΔI_{CC} Additional quiescent device current per input pin: 1 unit load[2]		ΔICC	V_{CC} - 2.1		4.5 to 5.5	25°C	100		360	μA
						–55°C to 85°C			450	
						–55°C to 125°C			490	

(1) Any voltage between V_{CC} and GND.
(2) For dual-supply systems, theoretical worse-case (V_I = 2.4V, V_{CC} = 5.5V) specification is 1.8mA.

5.7 Switching Characteristics, VCC = 5V

V_{CC} = 5V, T_A = 25°C, input t_r,t_f = 6 ns

Parameter		Test Conditions		C_L (pF)	MIN	NOM	MAX	UNIT
t_{PHL}, t_{PLH}	Supply voltage range (T_A = full package temperature range)	Switch IN to OUT	CDx4HC4051	15		4		ns
			CDx4HCT4051			4		
			CDx4HC4052			4		
			CDx4HCT4052			4		
			CDx4HC4053			4		
			CDx4HCT4053			4		
t_{PHZ}, t_{PLZ}		Switch turn-off (S or E)	CDx4HC4051	15		27		
			CDx4HCT4051			35		
			CDx4HC4052			33		
			CDx4HCT4052			33		
			CDx4HC4053			30		
			CDx4HCT4053			35		
t_{PZH}, t_{PZL}		Switch turn-on (S or E)	CDx4HC4051	15		19		
			CDx4HCT4051			23		
			CDx4HC4052			27		
			CDx4HCT4052			29		
			CDx4HC4053			18		
			CDx4HCT4053			28		
C_{PD} Power dissipation capacitance(1)			CDx4HC4051			50		pF
			CDx4HCT4051			52		
			CDx4HC4052			74		
			CDx4HCT4052			76		
			CDx4HC4053			38		
			CDx4HCT4053			42		

(1) C_{PD} is used to determine the dynamic power consumption, per package. $P_D = C_{PD} v_{CC}{}^2 f_i + \Sigma (C_L + C_S)\ V_{CC}{}^2 f_O$, f_O= output frequency, f_I = input frequency, C_L = output load capacitance, C_S = switch capacitance, V_{CC} = supply voltage

Copyright © 2024 Texas Instruments Incorporated

5.8 Switching Characteristics, CL = 50pF

C_L = 50pF, input t_r, t_f = 6 ns

Parameter		V_{EE} (V)	V_{CC} (V)	Test Conditions		MIN	NOM	MAX	UNIT
t_{PHL}, t_{PLH} Propagation delay, switch in to out		0	2	T_A = 25°C	HC			60	ns
				T_A = –40°C to +85°C	HC			75	
				T_A = –55°C to +125°C	HC			90	
		0	4.5	T_A = 25°C	HC, HCT			12	
				T_A = –40°C to +85°C	HC, HCT			15	
				T_A = –55°C to +125°C	HC, HCT			18	
		0	6	T_A = 25°C	HC			10	
				T_A = –40°C to +85°C	HC			13	
				T_A = –55°C to +125°C	HC			15	
		-4.5	4.5	T_A = 25°C	HC, HCT			8	
				T_A = –40°C to +85°C	HC, HCT			10	
				T_A = –55°C to +125°C	HC, HCT			12	
t_{PHZ}, t_{PLZ} Maximum switch turn OFF delay from S or E to switch output	4051	0	2	T_A = 25°C	HC			250	ns
				T_A = –40°C to +85°C	HC			340	
				T_A = –55°C to +125°C	HC			400	
		0	4.5	T_A = 25°C	HC, HCT			50	
				T_A = –40°C to +85°C	HC, HCT			56	
				T_A = –55°C to +125°C	HC, HCT			68	
		0	6	T_A = 25°C	HC			44	
				T_A = –40°C to +85°C	HC			50	
				T_A = –55°C to +125°C	HC			57	
		-4.5	4.5	T_A = 25°C	HC, HCT			44	
				T_A = –40°C to +85°C	HC, HCT			50	
				T_A = –55°C to +125°C	HC, HCT			55	

Copyright © 2024 Texas Instruments Incorporated

5.8 Switching Characteristics, CL = 50pF (continued)

C_L = 50pF, input t_r, t_f = 6 ns

Parameter		V_{EE} (V)	V_{CC} (V)	Test Conditions		MIN	NOM	MAX	UNIT
t_{PHZ}, t_{PLZ} Maximum switch turn OFF delay from S or E to switch output	4052	0	2	T_A = 25°C	HC			250	ns
				T_A = –40°C to +85°C	HC			340	
				T_A = –55°C to +125°C	HC			400	
		0	4.5	T_A = 25°C	HC, HCT			50	
				T_A = –40°C to +85°C	HC, HCT			63	
				T_A = –55°C to +125°C	HC, HCT			75	
		0	6	T_A = 25°C	HC			45	
				T_A = –40°C to +85°C	HC			54	
				T_A = –55°C to +125°C	HC			65	
		-4.5	4.5	T_A = 25°C	HC			45	
					HCT			45	
				T_A = –40°C to +85°C	HC			48	
					HCT			50	
				T_A = –55°C to +125°C	HC			57	
					HCT			57	
t_{PHZ}, t_{PLZ} Maximum switch turn OFF delay from S or E to switch output	4053	0	2	T_A = 25°C	HC			250	ns
				T_A = –40°C to +85°C	HC			340	
				T_A = –55°C to +125°C	HC			400	
		0	4.5	T_A = 25°C	HC			45	
					HCT			50	
				T_A = –40°C to +85°C	HC			53	
					HCT			53	
				T_A = –55°C to +125°C	HC			63	
					HCT			66	
		0	6	T_A = 25°C	HC			45	
				T_A = –40°C to +85°C	HC			50	
				T_A = –55°C to +125°C	HC			55	
		-4.5	4.5	T_A = 25°C	HC			45	
					HCT			45	
				T_A = –40°C to +85°C	HC			50	
					HCT			50	
				T_A = –55°C to +125°C	HC			55	
					HCT			55	

Copyright © 2024 Texas Instruments Incorporated

5.8 Switching Characteristics, CL = 50pF (continued)

C_L = 50pF, input t_r, t_f = 6 ns

Parameter		V_{EE} (V)	V_{CC} (V)	Test Conditions		MIN	NOM	MAX	UNIT
t_{PZL}, t_{PZH} Maximum switch turn ON delay from S or E to switch output	4051	0	2	T_A = 25°C	HC			325	ns
				T_A = –40°C to +85°C	HC			405	
				T_A = –55°C to +125°C	HC			490	
		0	4.5	T_A = 25°C	HC			45	
					HCT			55	
				T_A = –40°C to +85°C	HC			56	
					HCT			69	
				T_A = –55°C to +125°C	HC			68	
					HCT			83	
		0	6	T_A = 25°C	HC			38	
				T_A = –40°C to +85°C	HC			48	
				T_A = –55°C to +125°C	HC			57	
		-4.5	4.5	T_A = 25°C	HC			36	
					HCT			48	
				T_A = –40°C to +85°C	HC			40	
					HCT			55	
				T_A = –55°C to +125°C	HC			48	
					HCT			60	
t_{PZL}, t_{PZH} Maximum switch turn ON delay from S or E to switch output	4052	0	2	T_A = 25°C	HC			325	ns
				T_A = –40°C to +85°C	HC			405	
				T_A = –55°C to +125°C	HC			490	
		0	4.5	T_A = 25°C	HC			65	
					HCT			70	
				T_A = –40°C to +85°C	HC			81	
					HCT			68	
				T_A = –55°C to +125°C	HC			98	
					HCT			105	
		0	6	T_A = 25°C	HC			55	
				T_A = –40°C to +85°C	HC			69	
				T_A = –55°C to +125°C	HC			83	
		-4.5	4.5	T_A = 25°C	HC			46	
					HCT			48	
				T_A = –40°C to +85°C	HC			58	
					HCT			60	
				T_A = –55°C to +125°C	HC			69	
					HCT			72	

Copyright © 2024 Texas Instruments Incorporated

5.8 Switching Characteristics, CL = 50pF (continued)

C_L = 50pF, input t_r, t_f = 6 ns

Parameter		V_{EE} (V)	V_{CC} (V)	Test Conditions		MIN	NOM	MAX	UNIT
t_{PZL}, t_{PZH} Maximum switch turn ON delay from S or E to switch output	4053	0	2	T_A = 25°C	HC			325	ns
				T_A = –40°C to +85°C	HC			405	
				T_A = –55°C to +125°C	HC			490	
		0	4.5	T_A = 25°C	HC			44	
					HCT			48	
				T_A = –40°C to +85°C	HC			55	
					HCT			60	
				T_A = –55°C to +125°C	HC			66	
					HCT			72	
		0	6	T_A = 25°C	HC			37	
				T_A = –40°C to +85°C	HC			47	
				T_A = –55°C to +125°C	HC			56	
		-4.5	4.5	T_A = 25°C	HC			40	
					HCT			48	
				T_A = –40°C to +85°C	HC			45	
					HCT			55	
				T_A = –55°C to +125°C	HC			47	
					HCT			60	
C_I Input (control) capacitance				T_A = 25°C	HC, HCT			10	pF
				T_A = –40°C to +85°C	HC, HCT			10	
				T_A = –55°C to +125°C	HC, HCT			10	

5.9 Analog Channel Specifications

Typical values at T_A = 25°C

Parameter	Test Conditions	HC, HCT TYPES	V_{EE} (V)	V_{CC} (V)	MIN	NOM	MAX	UNIT
C_I Switch input capacitance		All				5		pF
C_{COM} Common output capacitance		4051				25		pF
		4052				12		
		4053				8		
f_{MAX} Minimum switch frequency response at –3 dB	See note(1) and (2)	4051	-2.25	2.25		145		MHz
		4052	-2.25	2.25		165		
		4053	-2.25	2.25		200		
		4051	-4.5	4.5		180		
		4052	-4.5	4.5		185		
		4053	-4.5	4.5		200		
THD Sine-wave distortion		All	-2.25	2.25		0.035		%
		All	-4.5	4.5		0.018		

Copyright © 2024 Texas Instruments Incorporated

5.9 Analog Channel Specifications (continued)

Typical values at T_A = 25°C

Parameter	Test Conditions	HC, HCT TYPES	V_{EE} (V)	V_{CC} (V)	MIN	NOM	MAX	UNIT
Switch OFF signal feedthrough	See note(2) and (3)	4051	-2.25	2.25		-73		dB
		4052	-2.25	2.25		-65		
		4053	-2.25	2.25		-64		
		4051	-4.5	4.5		-75		
		4052	-4.5	4.5		-67		
		4053	-4.5	4.5		-66		

(1) Adjust input voltage to obtain 0 dBm at V_{OS} for f_{IN} = 1 MHz.
(2) V_{is} is centered at (V_{CC} - V_{EE}) / 2.
(3) Adjust input for 0 dBm.

5.10 Typical Characteristics

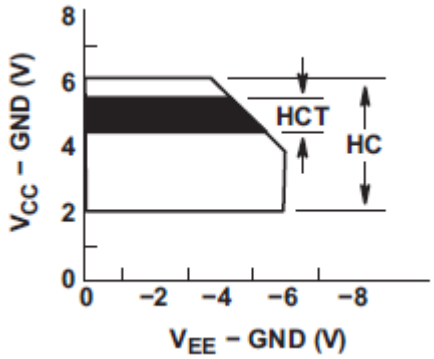

Figure 5-1. Recommended Operating Area as a Function of (V_{CC} - V_{EE})

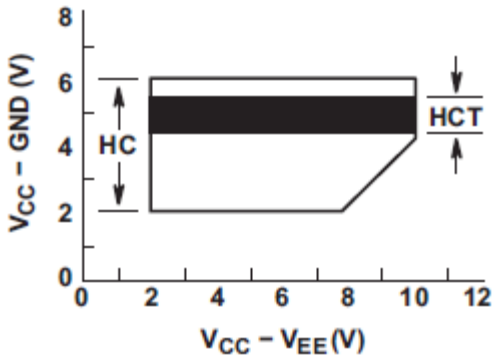

Figure 5-2. Recommended Operating Area as a Function of (V_{CC} - GND)

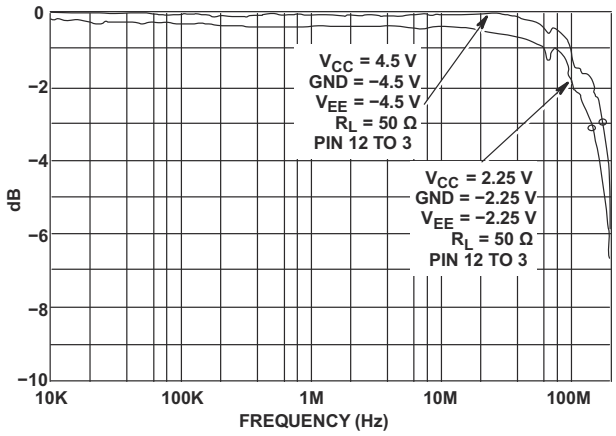

Figure 5-3. Channel ON Bandwidth (HC and HCT4051)

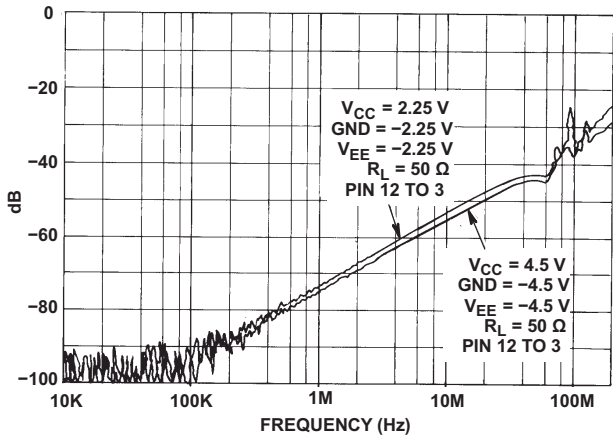

Figure 5-4. Channel OFF Feedthrough (HC and HCT4051)

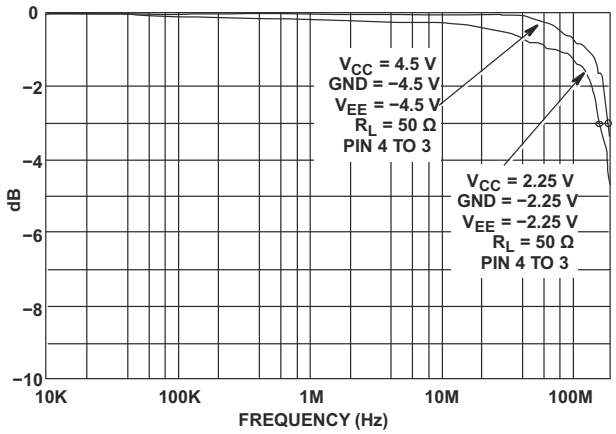

Figure 5-5. Channel ON Bandwidth (HC and HCT4052)

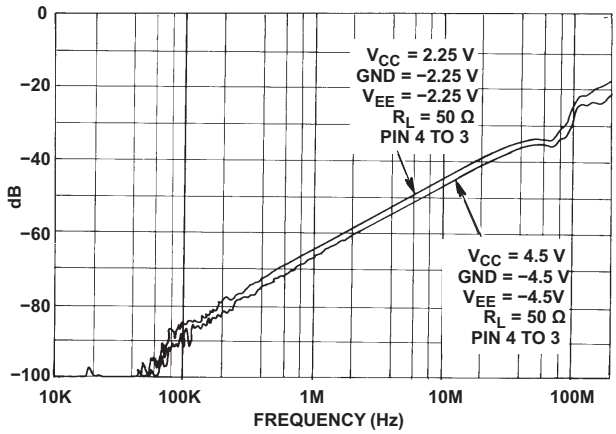

Figure 5-6. Channel OFF Feedthrough (HC and HCT4052)

Copyright © 2024 Texas Instruments Incorporated

5.10 Typical Characteristics (continued)

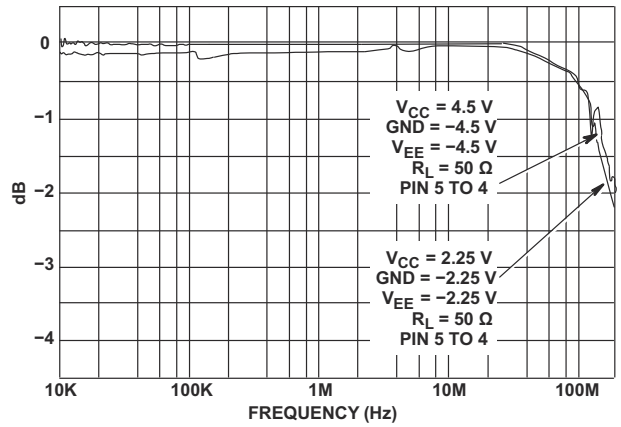

Figure 5-7. Channel ON Bandwidth (HC and HCT4053)

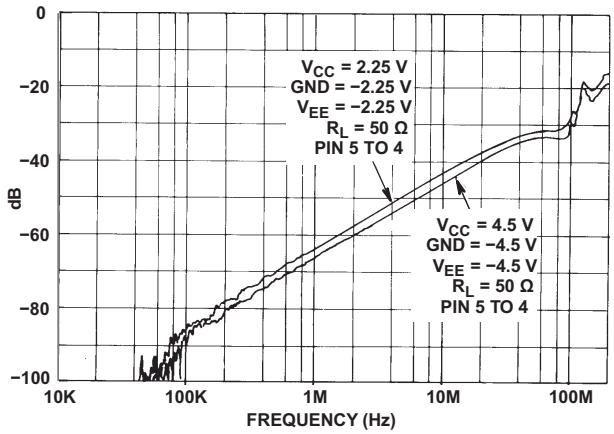

Figure 5-8. Channel OFF Feedthrough (HC and HCT4053)

6 Parameter Measurement Information

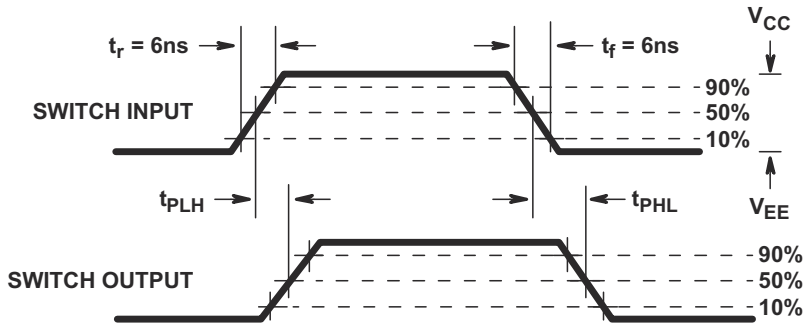

(FIGURE A)

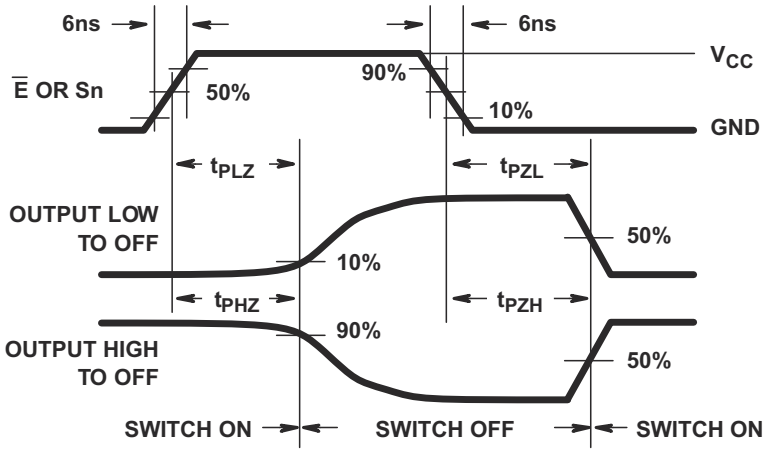

(FIGURE B) HC TYPES

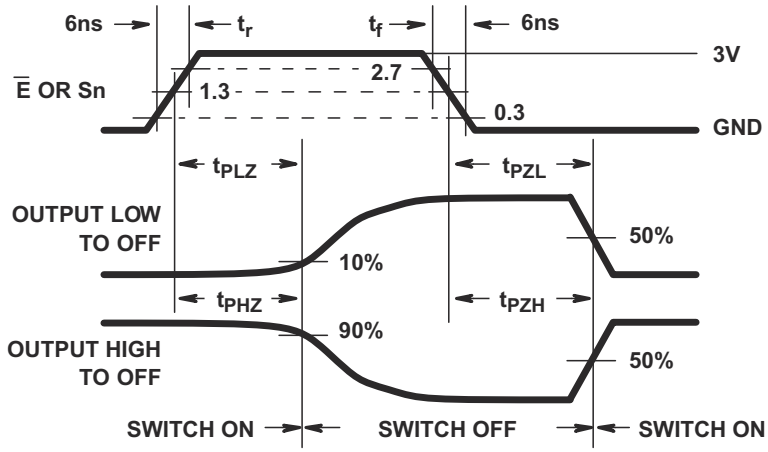

(FIGURE C) HCT TYPES

Figure 6-1. Switch Propagation Delay, Turn-On, Turn-Off Times

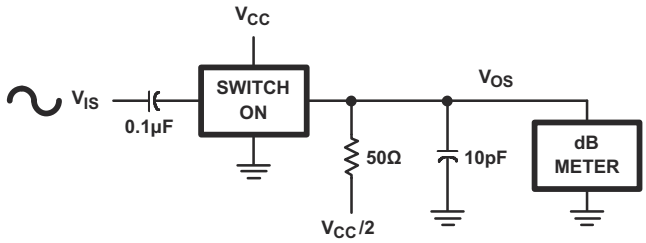

Figure 6-2. Frequency Response Test Circuit

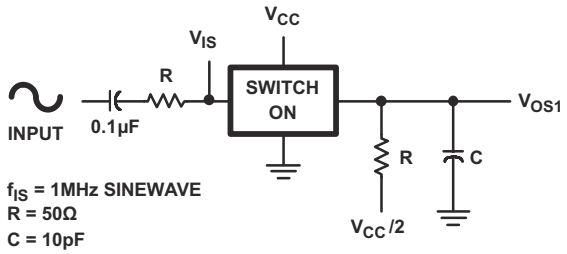

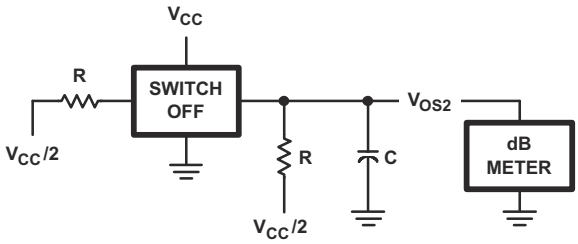

Figure 6-3. Crosstalk Between Two Switches Test Circuit

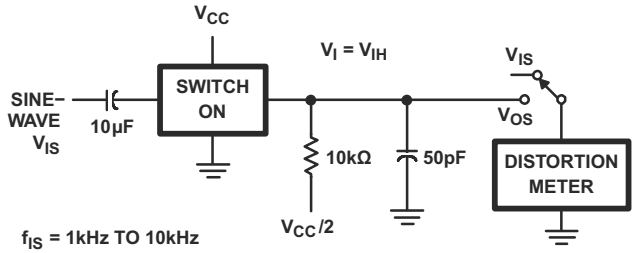

Figure 6-4. ¼Sine-Wave Distortion Test Circuit

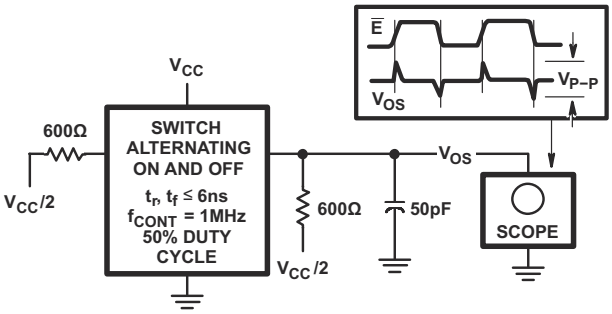

Figure 6-5. Control to Switch Feedthrough Noise Test Circuit

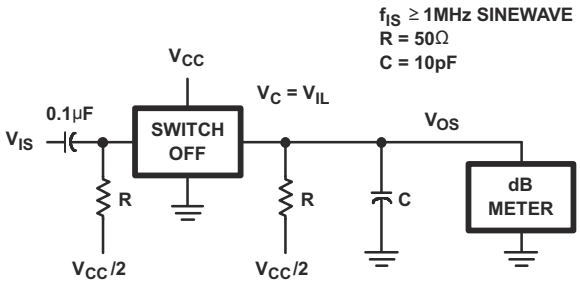

Figure 6-6. Switch OFF Signal Feedthrough

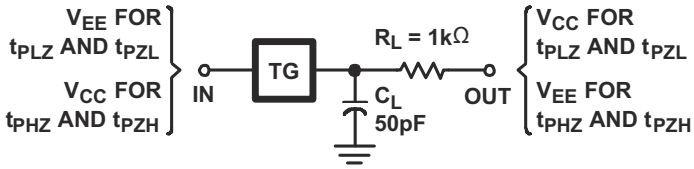

Figure 6-7. Switch ON/OFF Propagation Delay Test Circuit

Copyright © 2024 Texas Instruments Incorporated

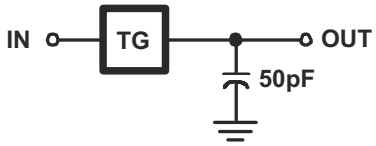

Figure 6-8. Switch In to Switch Out Propagation Delay Test Circuit

7 Detailed Description

7.1 Overview

The CDx4HCx4051 devices are a single 8-channel multiplexer having three binary control inputs, S_0, S_1, and S_2 and an $\overline{ENABLE}$ input. The three binary signals select 1 of 8 channels to be turned on, and connect one of the 8 inputs to the output.

The CDx4HCx4052 devices are a differential 4-channel multiplexer having two binary control inputs, S_0 and S_1, and an $\overline{ENABLE}$ input. The two binary input signals select 1 of 4 pairs of channels to be turned on and connect the analog inputs to the outputs.

The CDx4HCx4053 devices are a triple 2-channel multiplexer having three separate digital control inputs, S_0, S_1, and S_2 and an $\overline{ENABLE}$ input. Each control input selects one of a pair of channels that are connected in a single-pole, double-throw configuration.

When these devices are used as demultiplexers, the CHANNEL IN/OUT terminals are the outputs and the COMMON OUT/IN terminals are the inputs.

7.2 Functional Block Diagrams

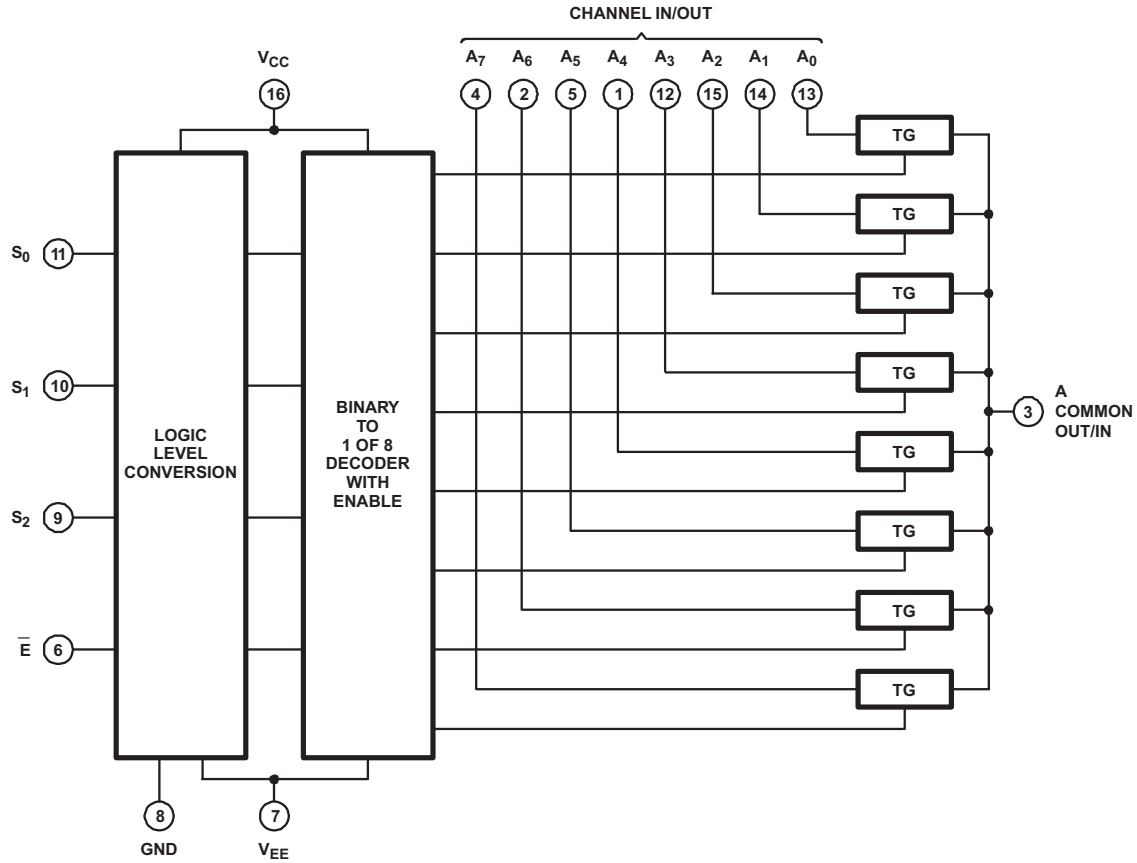

All inputs are protected by standard CMOS protection network.

Figure 7-1. CDx4HCx4051 Functional Block Diagram

Copyright © 2024 Texas Instruments Incorporated

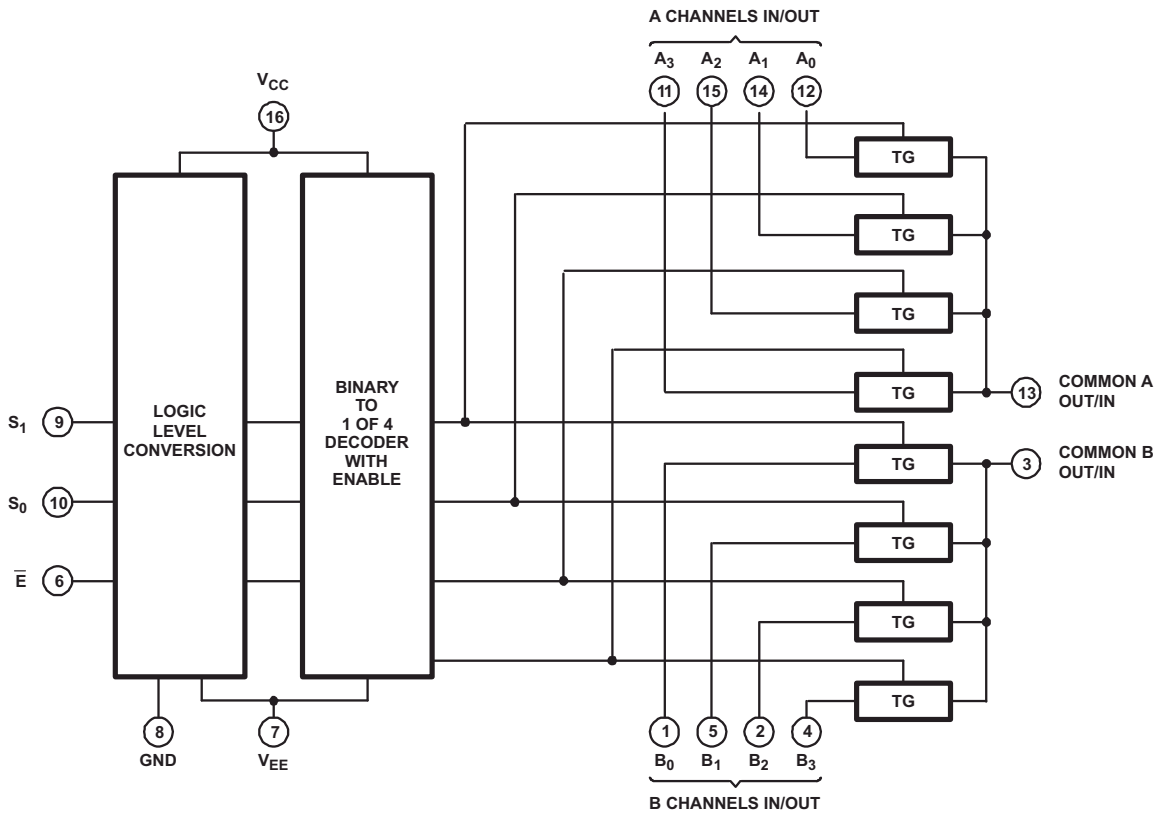

All inputs are protected by standard CMOS protection network.

Figure 7-2. CDx4HCx4052 Functional Block Diagram

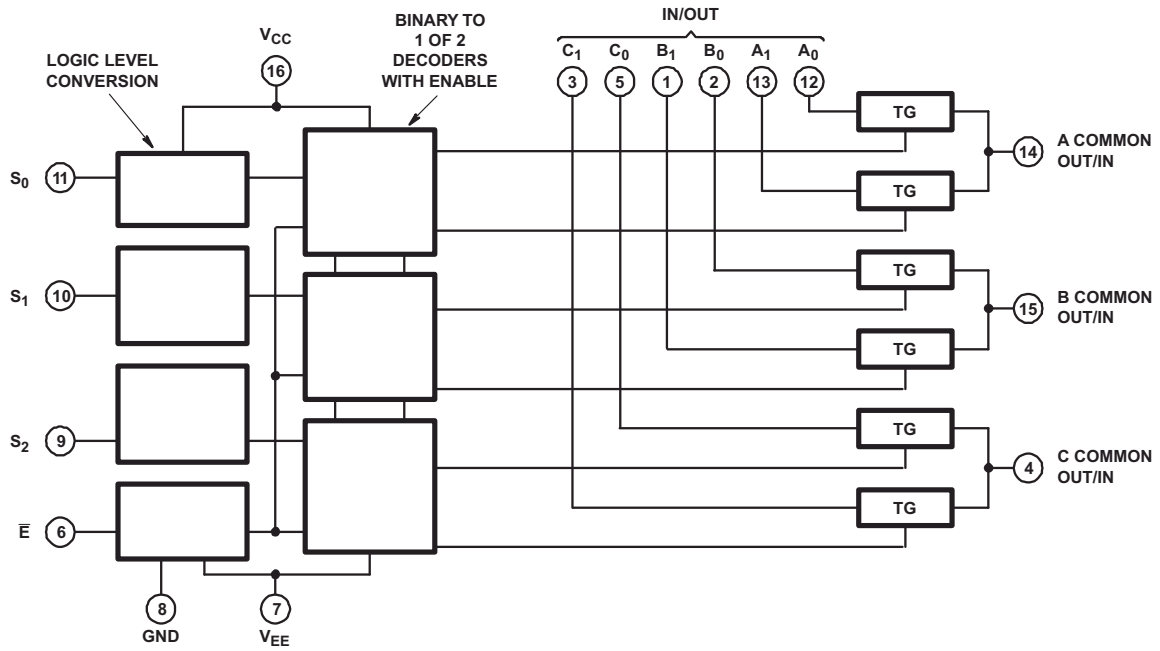

All inputs are protected by standard CMOS protection network.

Figure 7-3. CDx4HCx4053 Functional Block Diagram

7.3 Feature Description

The CDx4HCx405x line of multiplexers and demultiplexers can accept a wide range of analog signal levels from –5 to +5V. They have low ON resistance, typically 70Ω for $V_{CC} – V_{EE}$ = 4.5V and 40Ω for $V_C – V_{EE}$ = 4.5V, which allows for very little signal loss through the switch.

Binary address decoding on chip makes channel selection easy. When channels are changed, a break-before-make system eliminates channel overlap.

7.4 Device Functional Modes

Table 7-1. CD54HC4051, CD74HC4051, CD54HCT4051, CD74HCT4051 Function Table(1)

INPUT STATES				ON CHANNEL
ENABLE	S_2	S_1	S_0	
L	L	L	L	A0
L	L	L	H	A1
L	L	H	L	A2
L	L	H	H	A3
L	H	L	L	A4
L	H	L	H	A5
L	H	H	L	A6
L	H	H	H	A7
H	X	X	X	None

(1) X = Don't care

Table 7-2. CD54HC4052, CD74HC4052, CD54HCT4052, CD74HCT4052 Function Table(1)

INPUT STATES			ON CHANNELS
ENABLE	S_1	S_0	
L	L	L	A0, B0
L	L	H	A1, B1
L	H	L	A2, B2
L	H	H	A3, B3
H	X	X	None

(1) X = Don't care

Table 7-3. CD54HC4053, CD74HC4053, CD54HCT4053, CD74HCT4053 Function Table(1)

INPUT STATES				ON CHANNELS
ENABLE	S_2	S_1	S_0	
L	L	L	L	C0, B0, A0
L	L	L	H	C0, B0, A1
L	L	H	L	C0, B1, A0
L	L	H	H	C0, B1, A1
L	H	L	L	C1, B0, A0
L	H	L	H	C1, B0, A1
L	H	H	L	C1, B1, A0
L	H	H	H	C1, B1, A1
H	X	X	X	None

(1) X = Don't care

Copyright © 2024 Texas Instruments Incorporated

8 Application and Implementation

Note

Information in the following applications sections is not part of the TI component specification, and TI does not warrant its accuracy or completeness. TI's customers are responsible for determining suitability of components for their purposes, as well as validating and testing their design implementation to confirm system functionality.

8.1 Application Information

The CDx4HCx405x line of multiplexers and demultiplexers can be used for a wide variety of applications.

8.2 Typical Application

One application of the CD74HC4051 device is used in conjunction with a microcontroller to poll a keypad. Figure 8-1 shows the basic schematic for such a polling system. The microcontroller uses the channel-select pins to cycle through the different channels while reading the input to see if a user is pressing any of the keys. This is a very robust setup that allows for simultaneous key presses with very little power consumption. It also uses very few pins on the microcontroller. The down side of polling is that the microcontroller must frequently scan the keys for a press.

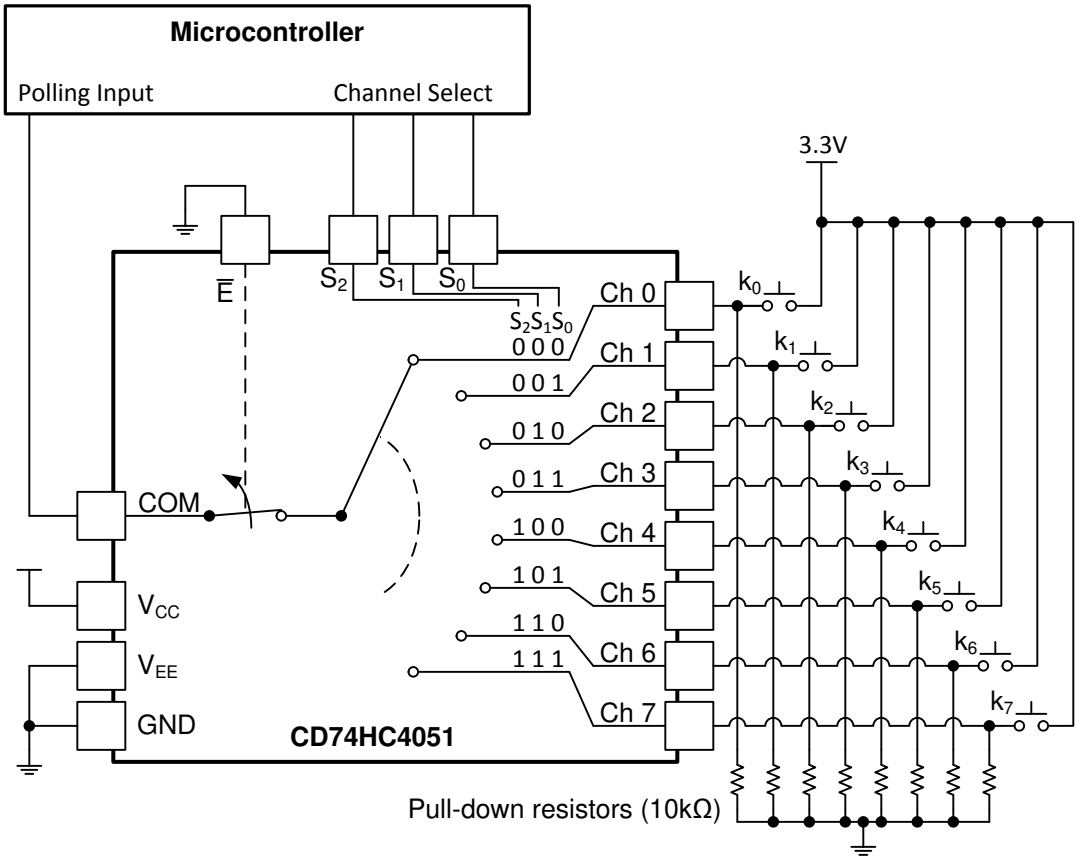

Figure 8-1. CD74HC4051 Being Used to Help Read Button Presses on a Keypad

8.2.1 Design Requirements

These devices use CMOS technology and have balanced output drive. Take care to avoid bus contention because it can drive currents that would exceed maximum limits. The high drive will also create fast edges into light loads, so routing and load conditions must be considered to prevent ringing.

See Table 8-1 for the input loading details.

Table 8-1. HCT Input Loading Table

TYPE	INPUT	UNIT LOADS[(1)]
4051, 4053	All	0.5
4052	All	0.4

(1) Unit load is ΔI_{CC} limit specified in *Section 5*, for example, 360mA MAX at 25°C.

8.2.2 Detailed Design Procedure

1. Recommended input conditions:
   - For switch time specifications, see propagation delay times in *Section 5.5*.
   - Inputs must not be pushed more than 0.5V above V_{DD} or below V_{EE}.
   - For input voltage level specifications for control inputs, see V_{IH} and V_{IL} in *Section 5.5*.
2. Recommended output conditions:
   - Outputs must not be pulled above V_{DD} or below V_{EE}.
3. Input and output current consideration:
   - The CDx4HCx405x series of parts do not have internal current-drive circuitry, and thus cannot sink or source current. Any current will be passed through the device.

8.2.3 Application Curve

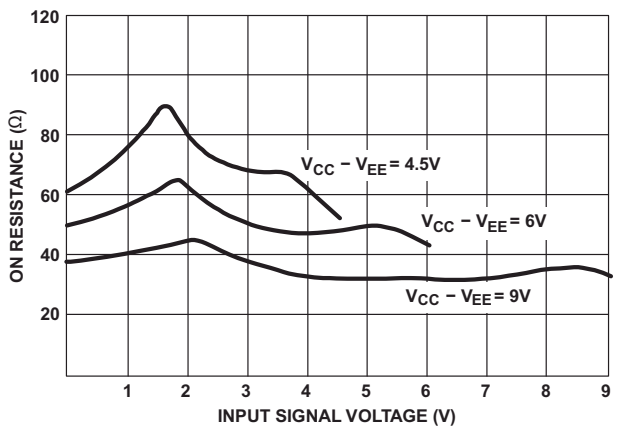

Figure 8-2. Typical ON Resistance vs Input Signal Voltage

8.3 Power Supply Recommendations

The power supply can be any voltage between the minimum and maximum supply voltage rating located in the *Section 5.5*.

Each V_{CC} terminal must have a good bypass capacitor to prevent power disturbance. For devices with a single supply, a 0.1µF bypass capacitor is recommended. If there are multiple pins labeled V_{CC}, then a 0.01µF or 0.022µF capacitor is recommended for each V_{CC} because the V_{CC} pins will be tied together internally. For devices with dual-supply pins operating at different voltages, for example V_{CC} and V_{DD}, a 0.1µF bypass capacitor is recommended for each supply pin. It is acceptable to parallel multiple bypass capacitors to reject different frequencies of noise. A 0.1µF and a 1µF capacitor are commonly used in parallel. For best results, the bypass capacitor or capacitors must be installed as close as possible to the power terminal.

Copyright © 2024 Texas Instruments Incorporated

8.4 Layout

8.4.1 Layout Guidelines

Reflections and matching are closely related to loop antenna theory, but different enough to warrant their own discussion. When a PCB trace turns a corner at a 90° angle, a reflection can occur. This is primarily due to the change in width of the trace. At the apex of the turn, the trace width is increased to 1.414 times its width. This change in width upsets the transmission line characteristics, especially the distributed capacitance and self-inductance of the trace, thus resulting in the reflection. Not all PCB traces can be straight, so they will have to turn corners. Figure 8-3 shows progressively better techniques of rounding corners. Only the last example (BEST) maintains constant trace width and minimizes reflections.

8.4.2 Layout Example

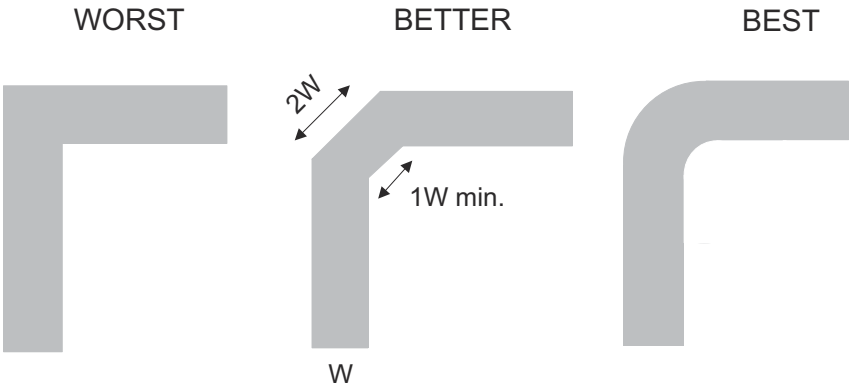

Figure 8-3. Trace Example

9 Device and Documentation Support

9.1 Documentation Support

9.1.1 Related Documentation

For related documentation, see the following:

- Texas Instruments, *Implications of Slow or Floating CMOS Inputs*

9.2 Receiving Notification of Documentation Updates

To receive notification of documentation updates, navigate to the device product folder on ti.com. Click on *Notifications* to register and receive a weekly digest of any product information that has changed. For change details, review the revision history included in any revised document.

9.3 Support Resources

TI E2E™ support forums are an engineer's go-to source for fast, verified answers and design help — straight from the experts. Search existing answers or ask your own question to get the quick design help you need.

Linked content is provided "AS IS" by the respective contributors. They do not constitute TI specifications and do not necessarily reflect TI's views; see TI's Terms of Use.

9.4 Trademarks

TI E2E™ is a trademark of Texas Instruments.
All trademarks are the property of their respective owners.

9.5 Electrostatic Discharge Caution

This integrated circuit can be damaged by ESD. Texas Instruments recommends that all integrated circuits be handled with appropriate precautions. Failure to observe proper handling and installation procedures can cause damage.

ESD damage can range from subtle performance degradation to complete device failure. Precision integrated circuits may be more susceptible to damage because very small parametric changes could cause the device not to meet its published specifications.

9.6 Glossary

TI Glossary	This glossary lists and explains terms, acronyms, and definitions.

10 Revision History

NOTE: Page numbers for previous revisions may differ from page numbers in the current version.

Changes from Revision M (May 2019) to Revision N (April 2024)	Page
• Changed thermal metrics	8
• Changed HC ICC at 25°C single/dual supply	9
• Changed HCT ICC at 25°C single/dual supply	12
• Changed: tPHZ/tPLZ typicals Switch turn-off (S or E)	14
• Changed tPHZ/tPLZ maximum switch turn OFF delay from S or E to switch output for 4051/4052/4053	15
• Changed tPZL/tPZH maximum switch turn ON delay from S or E to switch output for 4051/4053	15

Changes from Revision L (February 2017) to Revision M (May 2019)	Page
• Changed *Feature* From: 7Ω Typical To: 70Ω Typical	1

Changes from Revision K (September 2015) to Revision L (February 2017)	Page
• Changed charged device model (CDM) value from: ±1000V to: ±200V	7
• Added *Receiving Notification of Documentation Updates* section	7

Copyright © 2024 Texas Instruments Incorporated

Changes from Revision J (February 2011) to Revision K (September 2015) **Page**

- *Added Military Disclaimer to Features* list..... 1
- *Removed Ordering Information* table..... 1
- Added *Device Information* table, *Pin Functions* table, *ESD Ratings* table, *Thermal Information* table, *Detailed Description* section, *Applications and Implementation* section, *Power Supply Recommendations* section, *Layout* section, *Device and Documentation Support* section, and *Mechanical, Packaging, and Orderable Information* section..... 1

11 Mechanical, Packaging, and Orderable Information

The following pages include mechanical, packaging, and orderable information. This information is the most current data available for the designated devices. This data is subject to change without notice and revision of this document. For browser-based versions of this data sheet, refer to the left-hand navigation.

PACKAGING INFORMATION

Orderable part number	Status (1)	Material type (2)	Package | Pins	Package qty | Carrier	RoHS (3)	Lead finish/ Ball material (4)	MSL rating/ Peak reflow (5)	Op temp (°C)	Part marking (6)
5962-8775401EA	Active	Production	CDIP (J) | 16	25 | TUBE	No	SNPB	N/A for Pkg Type	-55 to 125	5962-8775401EA CD54HC4053F3A
5962-8855601EA	Active	Production	CDIP (J) | 16	25 | TUBE	No	SNPB	N/A for Pkg Type	-55 to 125	5962-8855601EA CD54HC4052F3A
5962-9065401MEA	Active	Production	CDIP (J) | 16	25 | TUBE	No	SNPB	N/A for Pkg Type	-55 to 125	5962-9065401ME A CD54HCT4051F3A
CD54HC4051F	Active	Production	CDIP (J) | 16	25 | TUBE	No	SNPB	N/A for Pkg Type	-55 to 125	CD54HC4051F
CD54HC4051F.A	Active	Production	CDIP (J) | 16	25 | TUBE	No	SNPB	N/A for Pkg Type	-55 to 125	CD54HC4051F
CD54HC4051F3A	Active	Production	CDIP (J) | 16	25 | TUBE	No	SNPB	N/A for Pkg Type	-55 to 125	CD54HC4051F3A
CD54HC4051F3A.A	Active	Production	CDIP (J) | 16	25 | TUBE	No	SNPB	N/A for Pkg Type	-55 to 125	CD54HC4051F3A
CD54HC4052F	Active	Production	CDIP (J) | 16	25 | TUBE	No	SNPB	N/A for Pkg Type	-55 to 125	CD54HC4052F
CD54HC4052F.A	Active	Production	CDIP (J) | 16	25 | TUBE	No	SNPB	N/A for Pkg Type	-55 to 125	CD54HC4052F
CD54HC4052F3A	Active	Production	CDIP (J) | 16	25 | TUBE	No	SNPB	N/A for Pkg Type	-55 to 125	5962-8855601EA CD54HC4052F3A
CD54HC4052F3A.A	Active	Production	CDIP (J) | 16	25 | TUBE	No	SNPB	N/A for Pkg Type	-55 to 125	5962-8855601EA CD54HC4052F3A
CD54HC4053F	Active	Production	CDIP (J) | 16	25 | TUBE	No	SNPB	N/A for Pkg Type	-55 to 125	CD54HC4053F
CD54HC4053F.A	Active	Production	CDIP (J) | 16	25 | TUBE	No	SNPB	N/A for Pkg Type	-55 to 125	CD54HC4053F
CD54HC4053F3A	Active	Production	CDIP (J) | 16	25 | TUBE	No	SNPB	N/A for Pkg Type	-55 to 125	5962-8775401EA CD54HC4053F3A
CD54HC4053F3A.A	Active	Production	CDIP (J) | 16	25 | TUBE	No	SNPB	N/A for Pkg Type	-55 to 125	5962-8775401EA CD54HC4053F3A
CD54HCT4051F3A	Active	Production	CDIP (J) | 16	25 | TUBE	No	SNPB	N/A for Pkg Type	-55 to 125	5962-9065401ME A CD54HCT4051F3A
CD54HCT4051F3A.A	Active	Production	CDIP (J) | 16	25 | TUBE	No	SNPB	N/A for Pkg Type	-55 to 125	5962-9065401ME A CD54HCT4051F3A
CD74HC4051E	Active	Production	PDIP (N) | 16	25 | TUBE	Yes	NIPDAU	N/A for Pkg Type	-55 to 125	CD74HC4051E
CD74HC4051E.A	Active	Production	PDIP (N) | 16	25 | TUBE	Yes	NIPDAU	N/A for Pkg Type	-55 to 125	CD74HC4051E
CD74HC4051EE4	Active	Production	PDIP (N) | 16	25 | TUBE	Yes	NIPDAU	N/A for Pkg Type	-55 to 125	CD74HC4051E

Orderable part number	Status (1)	Material type (2)	Package | Pins	Package qty | Carrier	RoHS (3)	Lead finish/ Ball material (4)	MSL rating/ Peak reflow (5)	Op temp (°C)	Part marking (6)
CD74HC4051M	Obsolete	Production	SOIC (D) | 16	-	-	Call TI	Call TI	-55 to 125	HC4051M
CD74HC4051M96	Active	Production	SOIC (D) | 16	2500 | LARGE T&R	Yes	NIPDAU	Level-1-260C-UNLIM	-55 to 125	HC4051M
CD74HC4051M96.A	Active	Production	SOIC (D) | 16	2500 | LARGE T&R	Yes	NIPDAU	Level-1-260C-UNLIM	-55 to 125	HC4051M
CD74HC4051M96G3	Obsolete	Production	SOIC (D) | 16	-	-	Call TI	Call TI	-55 to 125	HC4051M
CD74HC4051M96G4	Obsolete	Production	SOIC (D) | 16	-	-	Call TI	Call TI	-55 to 125	HC4051M
CD74HC4051MT	Obsolete	Production	SOIC (D) | 16	-	-	Call TI	Call TI	-55 to 125	HC4051M
CD74HC4051NSR	Active	Production	SOP (NS) | 16	2000 | LARGE T&R	Yes	NIPDAU | NIPDAU	Level-1-260C-UNLIM	-55 to 125	HC4051M
CD74HC4051NSR.A	Active	Production	SOP (NS) | 16	2000 | LARGE T&R	Yes	NIPDAU	Level-1-260C-UNLIM	-55 to 125	HC4051M
CD74HC4051NSRE4	Active	Production	SOP (NS) | 16	2000 | LARGE T&R	Yes	NIPDAU	Level-1-260C-UNLIM	-55 to 125	HC4051M
CD74HC4051PWR	Active	Production	TSSOP (PW) | 16	2000 | LARGE T&R	Yes	NIPDAU	Level-1-260C-UNLIM	-55 to 125	HJ4051
CD74HC4051PWR.A	Active	Production	TSSOP (PW) | 16	2000 | LARGE T&R	Yes	NIPDAU	Level-1-260C-UNLIM	-55 to 125	HJ4051
CD74HC4051PWRG4	Obsolete	Production	TSSOP (PW) | 16	-	-	Call TI	Call TI	-55 to 125	HJ4051
CD74HC4051PWT	Obsolete	Production	TSSOP (PW) | 16	-	-	Call TI	Call TI	-55 to 125	HJ4051
CD74HC4052E	NRND	Production	PDIP (N) | 16	25 | TUBE	Yes	NIPDAU	N/A for Pkg Type	-55 to 125	CD74HC4052E
CD74HC4052E.A	NRND	Production	PDIP (N) | 16	25 | TUBE	Yes	NIPDAU	N/A for Pkg Type	-55 to 125	CD74HC4052E
CD74HC4052M	Obsolete	Production	SOIC (D) | 16	-	-	Call TI	Call TI	-55 to 125	HC4052M
CD74HC4052M96	Active	Production	SOIC (D) | 16	2500 | LARGE T&R	Yes	NIPDAU	Level-1-260C-UNLIM	-55 to 125	HC4052M
CD74HC4052M96.A	Active	Production	SOIC (D) | 16	2500 | LARGE T&R	Yes	NIPDAU	Level-1-260C-UNLIM	-55 to 125	HC4052M
CD74HC4052M96G4	Obsolete	Production	SOIC (D) | 16	-	-	Call TI	Call TI	-55 to 125	HC4052M
CD74HC4052MT	Obsolete	Production	SOIC (D) | 16	-	-	Call TI	Call TI	-55 to 125	HC4052M
CD74HC4052NSR	Active	Production	SOP (NS) | 16	2000 | LARGE T&R	Yes	NIPDAU | NIPDAU	Level-1-260C-UNLIM	-55 to 125	HC4052M
CD74HC4052NSR.A	Active	Production	SOP (NS) | 16	2000 | LARGE T&R	Yes	NIPDAU	Level-1-260C-UNLIM	-55 to 125	HC4052M
CD74HC4052PW	Obsolete	Production	TSSOP (PW) | 16	-	-	Call TI	Call TI	-55 to 125	HJ4052
CD74HC4052PWR	Active	Production	TSSOP (PW) | 16	2000 | LARGE T&R	Yes	NIPDAU | SN	Level-1-260C-UNLIM	-55 to 125	HJ4052
CD74HC4052PWR.A	Active	Production	TSSOP (PW) | 16	2000 | LARGE T&R	Yes	NIPDAU	Level-1-260C-UNLIM	-55 to 125	HJ4052
CD74HC4052PWRG4	Obsolete	Production	TSSOP (PW) | 16	-	-	Call TI	Call TI	-55 to 125	HJ4052
CD74HC4052PWT	Obsolete	Production	TSSOP (PW) | 16	-	-	Call TI	Call TI	-55 to 125	HJ4052
CD74HC4053E	NRND	Production	PDIP (N) | 16	25 | TUBE	Yes	NIPDAU	N/A for Pkg Type	-55 to 125	CD74HC4053E
CD74HC4053E.A	NRND	Production	PDIP (N) | 16	25 | TUBE	Yes	NIPDAU	N/A for Pkg Type	-55 to 125	CD74HC4053E
CD74HC4053M	Obsolete	Production	SOIC (D) | 16	-	-	Call TI	Call TI	-55 to 125	HC4053M
CD74HC4053M96	Active	Production	SOIC (D) | 16	2500 | LARGE T&R	Yes	NIPDAU | SN	Level-1-260C-UNLIM	-55 to 125	HC4053M

Orderable part number	Status (1)	Material type (2)	Package | Pins	Package qty | Carrier	RoHS (3)	Lead finish/ Ball material (4)	MSL rating/ Peak reflow (5)	Op temp (°C)	Part marking (6)
CD74HC4053M96.A	Active	Production	SOIC (D) | 16	2500 | LARGE T&R	Yes	NIPDAU	Level-1-260C-UNLIM	-55 to 125	HC4053M
CD74HC4053M96G3	Obsolete	Production	SOIC (D) | 16	-	-	Call TI	Call TI	-55 to 125	HC4053M
CD74HC4053M96G4	Obsolete	Production	SOIC (D) | 16	-	-	Call TI	Call TI	-55 to 125	HC4053M
CD74HC4053MT	Obsolete	Production	SOIC (D) | 16	-	-	Call TI	Call TI	-55 to 125	HC4053M
CD74HC4053NSR	NRND	Production	SOP (NS) | 16	2000 | LARGE T&R	Yes	NIPDAU	Level-1-260C-UNLIM	-55 to 125	HC4053M
CD74HC4053NSR.A	NRND	Production	SOP (NS) | 16	2000 | LARGE T&R	Yes	NIPDAU	Level-1-260C-UNLIM	-55 to 125	HC4053M
CD74HC4053PW	Obsolete	Production	TSSOP (PW) | 16	-	-	Call TI	Call TI	-55 to 125	HJ4053
CD74HC4053PWR	Active	Production	TSSOP (PW) | 16	2000 | LARGE T&R	Yes	NIPDAU	Level-1-260C-UNLIM	-55 to 125	HJ4053
CD74HC4053PWR.A	Active	Production	TSSOP (PW) | 16	2000 | LARGE T&R	Yes	NIPDAU	Level-1-260C-UNLIM	-55 to 125	HJ4053
CD74HC4053PWRG4	Obsolete	Production	TSSOP (PW) | 16	-	-	Call TI	Call TI	-55 to 125	HJ4053
CD74HC4053PWT	Obsolete	Production	TSSOP (PW) | 16	-	-	Call TI	Call TI	-55 to 125	HJ4053
CD74HCT4051E	NRND	Production	PDIP (N) | 16	25 | TUBE	Yes	NIPDAU	N/A for Pkg Type	-55 to 125	CD74HCT4051E
CD74HCT4051E.A	NRND	Production	PDIP (N) | 16	25 | TUBE	Yes	NIPDAU	N/A for Pkg Type	-55 to 125	CD74HCT4051E
CD74HCT4051M	Obsolete	Production	SOIC (D) | 16	-	-	Call TI	Call TI	-55 to 125	HCT4051M
CD74HCT4051M96	Active	Production	SOIC (D) | 16	2500 | LARGE T&R	Yes	NIPDAU	Level-1-260C-UNLIM	-55 to 125	HCT4051M
CD74HCT4051M96.A	Active	Production	SOIC (D) | 16	2500 | LARGE T&R	Yes	NIPDAU	Level-1-260C-UNLIM	-55 to 125	HCT4051M
CD74HCT4051M96E4	Active	Production	SOIC (D) | 16	2500 | LARGE T&R	Yes	NIPDAU	Level-1-260C-UNLIM	-55 to 125	HCT4051M
CD74HCT4051M96G4	Active	Production	SOIC (D) | 16	2500 | LARGE T&R	Yes	NIPDAU	Level-1-260C-UNLIM	-55 to 125	HCT4051M
CD74HCT4051MT	Obsolete	Production	SOIC (D) | 16	-	-	Call TI	Call TI	-55 to 125	HCT4051M
CD74HCT4052E	NRND	Production	PDIP (N) | 16	25 | TUBE	Yes	NIPDAU	N/A for Pkg Type	-55 to 125	CD74HCT4052E
CD74HCT4052E.A	NRND	Production	PDIP (N) | 16	25 | TUBE	Yes	NIPDAU	N/A for Pkg Type	-55 to 125	CD74HCT4052E
CD74HCT4052EE4	NRND	Production	PDIP (N) | 16	25 | TUBE	Yes	NIPDAU	N/A for Pkg Type	-55 to 125	CD74HCT4052E
CD74HCT4052M	Obsolete	Production	SOIC (D) | 16	-	-	Call TI	Call TI	-55 to 125	HCT4052M
CD74HCT4052M96	Active	Production	SOIC (D) | 16	2500 | LARGE T&R	Yes	NIPDAU	Level-1-260C-UNLIM	-55 to 125	HCT4052M
CD74HCT4052M96.A	Active	Production	SOIC (D) | 16	2500 | LARGE T&R	Yes	NIPDAU	Level-1-260C-UNLIM	-55 to 125	HCT4052M
CD74HCT4052M96G4	Active	Production	SOIC (D) | 16	2500 | LARGE T&R	Yes	NIPDAU	Level-1-260C-UNLIM	-55 to 125	HCT4052M
CD74HCT4052MT	Obsolete	Production	SOIC (D) | 16	-	-	Call TI	Call TI	-55 to 125	HCT4052M
CD74HCT4053E	NRND	Production	PDIP (N) | 16	25 | TUBE	Yes	NIPDAU	N/A for Pkg Type	-55 to 125	CD74HCT4053E
CD74HCT4053E.A	NRND	Production	PDIP (N) | 16	25 | TUBE	Yes	NIPDAU	N/A for Pkg Type	-55 to 125	CD74HCT4053E
CD74HCT4053M	Obsolete	Production	SOIC (D) | 16	-	-	Call TI	Call TI	-55 to 125	HCT4053M
CD74HCT4053M96	Active	Production	SOIC (D) | 16	2500 | LARGE T&R	Yes	NIPDAU	Level-1-260C-UNLIM	-55 to 125	HCT4053M

Orderable part number	Status (1)	Material type (2)	Package | Pins	Package qty | Carrier	RoHS (3)	Lead finish/ Ball material (4)	MSL rating/ Peak reflow (5)	Op temp (°C)	Part marking (6)
CD74HCT4053M96.A	Active	Production	SOIC (D) | 16	2500 | LARGE T&R	Yes	NIPDAU	Level-1-260C-UNLIM	-55 to 125	HCT4053M
CD74HCT4053M96E4	Active	Production	SOIC (D) | 16	2500 | LARGE T&R	Yes	NIPDAU	Level-1-260C-UNLIM	-55 to 125	HCT4053M
CD74HCT4053M96G4	Active	Production	SOIC (D) | 16	2500 | LARGE T&R	Yes	NIPDAU	Level-1-260C-UNLIM	-55 to 125	HCT4053M
CD74HCT4053MT	Obsolete	Production	SOIC (D) | 16	-	-	Call TI	Call TI	-55 to 125	HCT4053M
CD74HCT4053PWR	Active	Production	TSSOP (PW) | 16	2000 | LARGE T&R	Yes	NIPDAU	Level-1-260C-UNLIM	-55 to 125	HK4053
CD74HCT4053PWR.A	Active	Production	TSSOP (PW) | 16	2000 | LARGE T&R	Yes	NIPDAU	Level-1-260C-UNLIM	-55 to 125	HK4053
CD74HCT4053PWT	Obsolete	Production	TSSOP (PW) | 16	-	-	Call TI	Call TI	-55 to 125	HK4053

(1) **Status:** For more details on status, see our product life cycle.

(2) **Material type:** When designated, preproduction parts are prototypes/experimental devices, and are not yet approved or released for full production. Testing and final process, including without limitation quality assurance, reliability performance testing, and/or process qualification, may not yet be complete, and this item is subject to further changes or possible discontinuation. If available for ordering, purchases will be subject to an additional waiver at checkout, and are intended for early internal evaluation purposes only. These items are sold without warranties of any kind.

(3) **RoHS values:** Yes, No, RoHS Exempt. See the TI RoHS Statement for additional information and value definition.

(4) **Lead finish/Ball material:** Parts may have multiple material finish options. Finish options are separated by a vertical ruled line. Lead finish/Ball material values may wrap to two lines if the finish value exceeds the maximum column width.

(5) **MSL rating/Peak reflow:** The moisture sensitivity level ratings and peak solder (reflow) temperatures. In the event that a part has multiple moisture sensitivity ratings, only the lowest level per JEDEC standards is shown. Refer to the shipping label for the actual reflow temperature that will be used to mount the part to the printed circuit board.

(6) **Part marking:** There may be an additional marking, which relates to the logo, the lot trace code information, or the environmental category of the part.

Multiple part markings will be inside parentheses. Only one part marking contained in parentheses and separated by a "~" will appear on a part. If a line is indented then it is a continuation of the previous line and the two combined represent the entire part marking for that device.

Important Information and Disclaimer: The information provided on this page represents TI's knowledge and belief as of the date that it is provided. TI bases its knowledge and belief on information provided by third parties, and makes no representation or warranty as to the accuracy of such information. Efforts are underway to better integrate information from third parties. TI has taken and continues to take reasonable steps to provide representative and accurate information but may not have conducted destructive testing or chemical analysis on incoming materials and chemicals. TI and TI suppliers consider certain information to be proprietary, and thus CAS numbers and other limited information may not be available for release.

In no event shall TI's liability arising out of such information exceed the total purchase price of the TI part(s) at issue in this document sold by TI to Customer on an annual basis.

OTHER QUALIFIED VERSIONS OF CD54HC4051, CD54HC4052, CD54HC4053, CD54HCT4051, CD74HC4051, CD74HC4052, CD74HC4053, CD74HCT4051 :

- Catalog : CD74HC4051, CD74HC4052, CD74HC4053, CD74HCT4051
- Automotive : CD74HC4051-Q1, CD74HCT4051-Q1, CD74HC4051-Q1, CD74HCT4051-Q1
- Enhanced Product : CD74HC4051-EP, CD74HC4051-EP
- Military : CD54HC4051, CD54HC4052, CD54HC4053, CD54HCT4051

NOTE: Qualified Version Definitions:

- Catalog - TI's standard catalog product
- Automotive - Q100 devices qualified for high-reliability automotive applications targeting zero defects
- Enhanced Product - Supports Defense, Aerospace and Medical Applications
- Military - QML certified for Military and Defense Applications

TAPE AND REEL INFORMATION

REEL DIMENSIONS

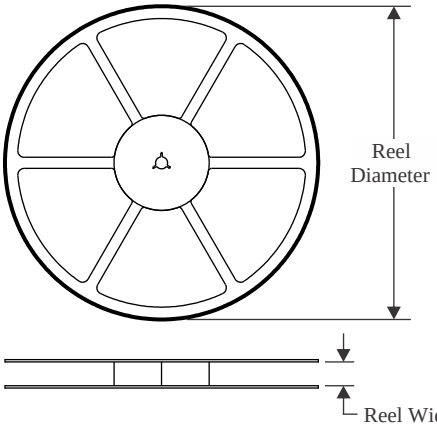

TAPE DIMENSIONS

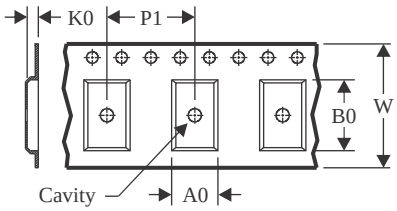

A0	Dimension designed to accommodate the component width
B0	Dimension designed to accommodate the component length
K0	Dimension designed to accommodate the component thickness
W	Overall width of the carrier tape
P1	Pitch between successive cavity centers

QUADRANT ASSIGNMENTS FOR PIN 1 ORIENTATION IN TAPE

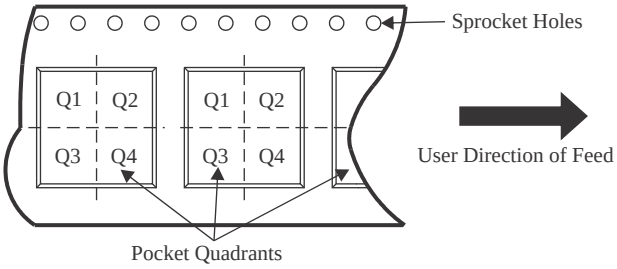

*All dimensions are nominal

Device	Package Type	Package Drawing	Pins	SPQ	Reel Diameter (mm)	Reel Width W1 (mm)	A0 (mm)	B0 (mm)	K0 (mm)	P1 (mm)	W (mm)	Pin1 Quadrant
CD74HC4051M96	SOIC	D	16	2500	330.0	16.4	6.5	10.3	2.1	8.0	16.0	Q1
CD74HC4051M96	SOIC	D	16	2500	330.0	16.4	6.5	10.3	2.1	8.0	16.0	Q1
CD74HC4051NSR	SOP	NS	16	2000	330.0	16.4	8.2	10.5	2.5	12.0	16.0	Q1
CD74HC4051NSR	SOP	NS	16	2000	330.0	16.4	8.1	10.4	2.5	12.0	16.0	Q1
CD74HC4051PWR	TSSOP	PW	16	2000	330.0	12.4	6.9	5.6	1.6	8.0	12.0	Q1
CD74HC4051PWR	TSSOP	PW	16	2000	330.0	12.4	6.9	5.6	1.6	8.0	12.0	Q1
CD74HC4052M96	SOIC	D	16	2500	330.0	16.4	6.5	10.3	2.1	8.0	16.0	Q1
CD74HC4052M96	SOIC	D	16	2500	330.0	16.4	6.5	10.3	2.1	8.0	16.0	Q1
CD74HC4052NSR	SOP	NS	16	2000	330.0	16.4	8.1	10.4	2.5	12.0	16.0	Q1
CD74HC4052NSR	SOP	NS	16	2000	330.0	16.4	8.2	10.5	2.5	12.0	16.0	Q1
CD74HC4052PWR	TSSOP	PW	16	2000	330.0	12.4	6.9	5.6	1.6	8.0	12.0	Q1
CD74HC4052PWR	TSSOP	PW	16	2000	330.0	12.4	6.9	5.6	1.6	8.0	12.0	Q1
CD74HC4053M96	SOIC	D	16	2500	330.0	16.4	6.5	10.3	2.1	8.0	16.0	Q1
CD74HC4053M96	SOIC	D	16	2500	330.0	16.4	6.5	10.3	2.1	8.0	16.0	Q1
CD74HC4053NSR	SOP	NS	16	2000	330.0	16.4	8.2	10.5	2.5	12.0	16.0	Q1
CD74HC4053PWR	TSSOP	PW	16	2000	330.0	12.4	6.9	5.6	1.6	8.0	12.0	Q1

Device	Package Type	Package Drawing	Pins	SPQ	Reel Diameter (mm)	Reel Width W1 (mm)	A0 (mm)	B0 (mm)	K0 (mm)	P1 (mm)	W (mm)	Pin1 Quadrant
CD74HC4053PWR	TSSOP	PW	16	2000	330.0	12.4	6.9	5.6	1.6	8.0	12.0	Q1
CD74HCT4051M96	SOIC	D	16	2500	330.0	16.4	6.5	10.3	2.1	8.0	16.0	Q1
CD74HCT4051M96	SOIC	D	16	2500	330.0	16.4	6.5	10.3	2.1	8.0	16.0	Q1
CD74HCT4052M96	SOIC	D	16	2500	330.0	16.4	6.5	10.3	2.1	8.0	16.0	Q1
CD74HCT4052M96	SOIC	D	16	2500	330.0	16.4	6.5	10.3	2.1	8.0	16.0	Q1
CD74HCT4053M96	SOIC	D	16	2500	330.0	16.4	6.5	10.3	2.1	8.0	16.0	Q1
CD74HCT4053M96	SOIC	D	16	2500	330.0	16.4	6.5	10.3	2.1	8.0	16.0	Q1
CD74HCT4053PWR	TSSOP	PW	16	2000	330.0	12.4	6.9	5.6	1.6	8.0	12.0	Q1
CD74HCT4053PWR	TSSOP	PW	16	2000	330.0	12.4	6.9	5.6	1.6	8.0	12.0	Q1

TAPE AND REEL BOX DIMENSIONS

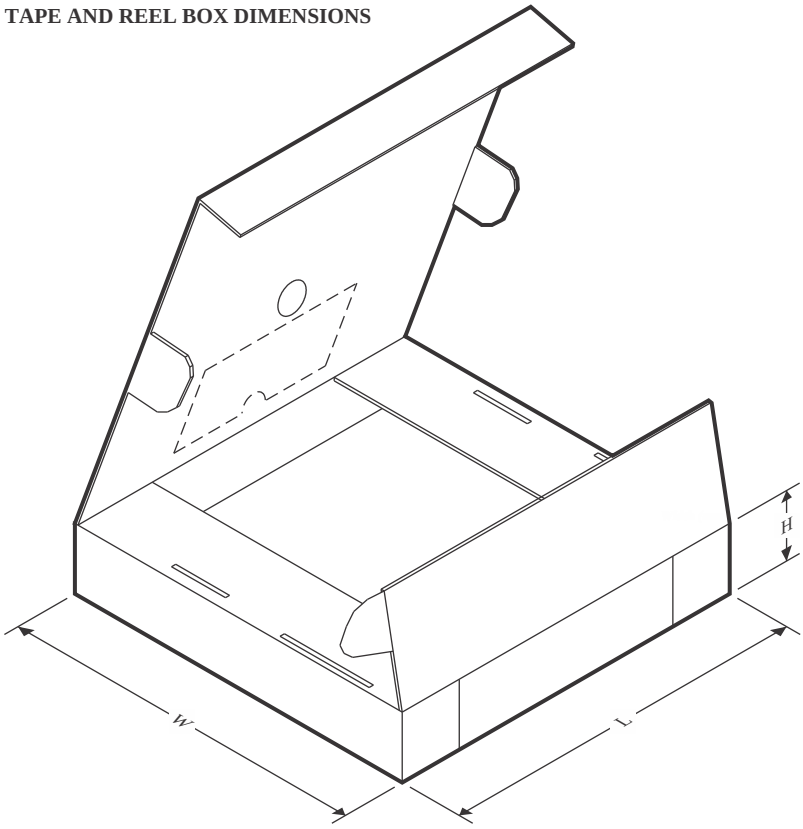

*All dimensions are nominal

Device	Package Type	Package Drawing	Pins	SPQ	Length (mm)	Width (mm)	Height (mm)
CD74HC4051M96	SOIC	D	16	2500	353.0	353.0	32.0
CD74HC4051M96	SOIC	D	16	2500	340.5	336.1	32.0
CD74HC4051NSR	SOP	NS	16	2000	353.0	353.0	32.0
CD74HC4051NSR	SOP	NS	16	2000	367.0	367.0	38.0
CD74HC4051PWR	TSSOP	PW	16	2000	353.0	353.0	32.0
CD74HC4051PWR	TSSOP	PW	16	2000	356.0	356.0	35.0
CD74HC4052M96	SOIC	D	16	2500	340.5	336.1	32.0
CD74HC4052M96	SOIC	D	16	2500	353.0	353.0	32.0
CD74HC4052NSR	SOP	NS	16	2000	356.0	356.0	35.0
CD74HC4052NSR	SOP	NS	16	2000	353.0	353.0	32.0
CD74HC4052PWR	TSSOP	PW	16	2000	353.0	353.0	32.0
CD74HC4052PWR	TSSOP	PW	16	2000	356.0	356.0	35.0
CD74HC4053M96	SOIC	D	16	2500	353.0	353.0	32.0
CD74HC4053M96	SOIC	D	16	2500	340.5	336.1	32.0
CD74HC4053NSR	SOP	NS	16	2000	356.0	356.0	35.0
CD74HC4053PWR	TSSOP	PW	16	2000	356.0	356.0	35.0
CD74HC4053PWR	TSSOP	PW	16	2000	353.0	353.0	32.0
CD74HCT4051M96	SOIC	D	16	2500	340.5	336.1	32.0

Device	Package Type	Package Drawing	Pins	SPQ	Length (mm)	Width (mm)	Height (mm)
CD74HCT4051M96	SOIC	D	16	2500	353.0	353.0	32.0
CD74HCT4052M96	SOIC	D	16	2500	340.5	336.1	32.0
CD74HCT4052M96	SOIC	D	16	2500	353.0	353.0	32.0
CD74HCT4053M96	SOIC	D	16	2500	353.0	353.0	32.0
CD74HCT4053M96	SOIC	D	16	2500	340.5	336.1	32.0
CD74HCT4053PWR	TSSOP	PW	16	2000	353.0	353.0	32.0
CD74HCT4053PWR	TSSOP	PW	16	2000	356.0	356.0	35.0

TUBE

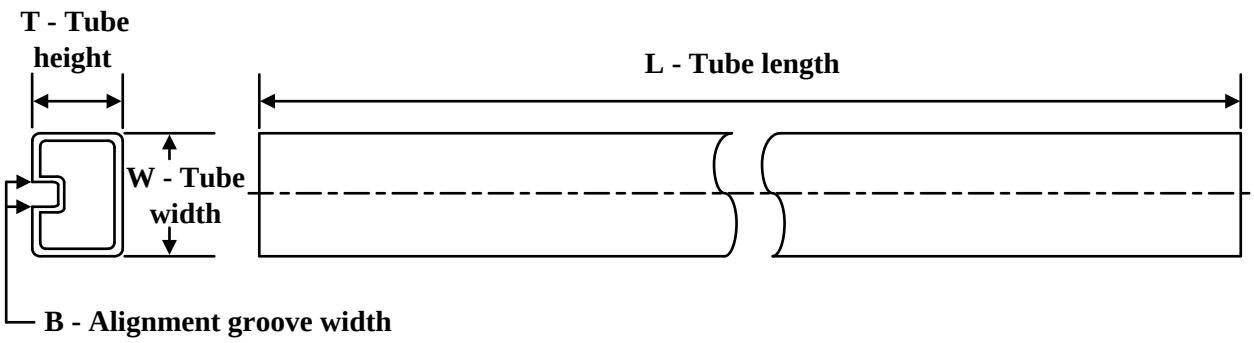

*All dimensions are nominal

Device	Package Name	Package Type	Pins	SPQ	L (mm)	W (mm)	T (µm)	B (mm)
CD74HC4051E	N	PDIP	16	25	506	13.97	11230	4.32
CD74HC4051E.A	N	PDIP	16	25	506	13.97	11230	4.32
CD74HC4051EE4	N	PDIP	16	25	506	13.97	11230	4.32
CD74HC4052E	N	PDIP	16	25	506	13.97	11230	4.32
CD74HC4052E	N	PDIP	16	25	506	13.97	11230	4.32
CD74HC4052E.A	N	PDIP	16	25	506	13.97	11230	4.32
CD74HC4052E.A	N	PDIP	16	25	506	13.97	11230	4.32
CD74HC4053E	N	PDIP	16	25	506	13.97	11230	4.32
CD74HC4053E	N	PDIP	16	25	506	13.97	11230	4.32
CD74HC4053E.A	N	PDIP	16	25	506	13.97	11230	4.32
CD74HC4053E.A	N	PDIP	16	25	506	13.97	11230	4.32
CD74HCT4051E	N	PDIP	16	25	506	13.97	11230	4.32
CD74HCT4051E	N	PDIP	16	25	506	13.97	11230	4.32
CD74HCT4051E.A	N	PDIP	16	25	506	13.97	11230	4.32
CD74HCT4051E.A	N	PDIP	16	25	506	13.97	11230	4.32
CD74HCT4052E	N	PDIP	16	25	506	13.97	11230	4.32
CD74HCT4052E	N	PDIP	16	25	506	13.97	11230	4.32
CD74HCT4052E.A	N	PDIP	16	25	506	13.97	11230	4.32
CD74HCT4052E.A	N	PDIP	16	25	506	13.97	11230	4.32
CD74HCT4052EE4	N	PDIP	16	25	506	13.97	11230	4.32
CD74HCT4052EE4	N	PDIP	16	25	506	13.97	11230	4.32
CD74HCT4053E	N	PDIP	16	25	506	13.97	11230	4.32
CD74HCT4053E	N	PDIP	16	25	506	13.97	11230	4.32
CD74HCT4053E.A	N	PDIP	16	25	506	13.97	11230	4.32
CD74HCT4053E.A	N	PDIP	16	25	506	13.97	11230	4.32

D (R–PDSO–G16) PLASTIC SMALL OUTLINE

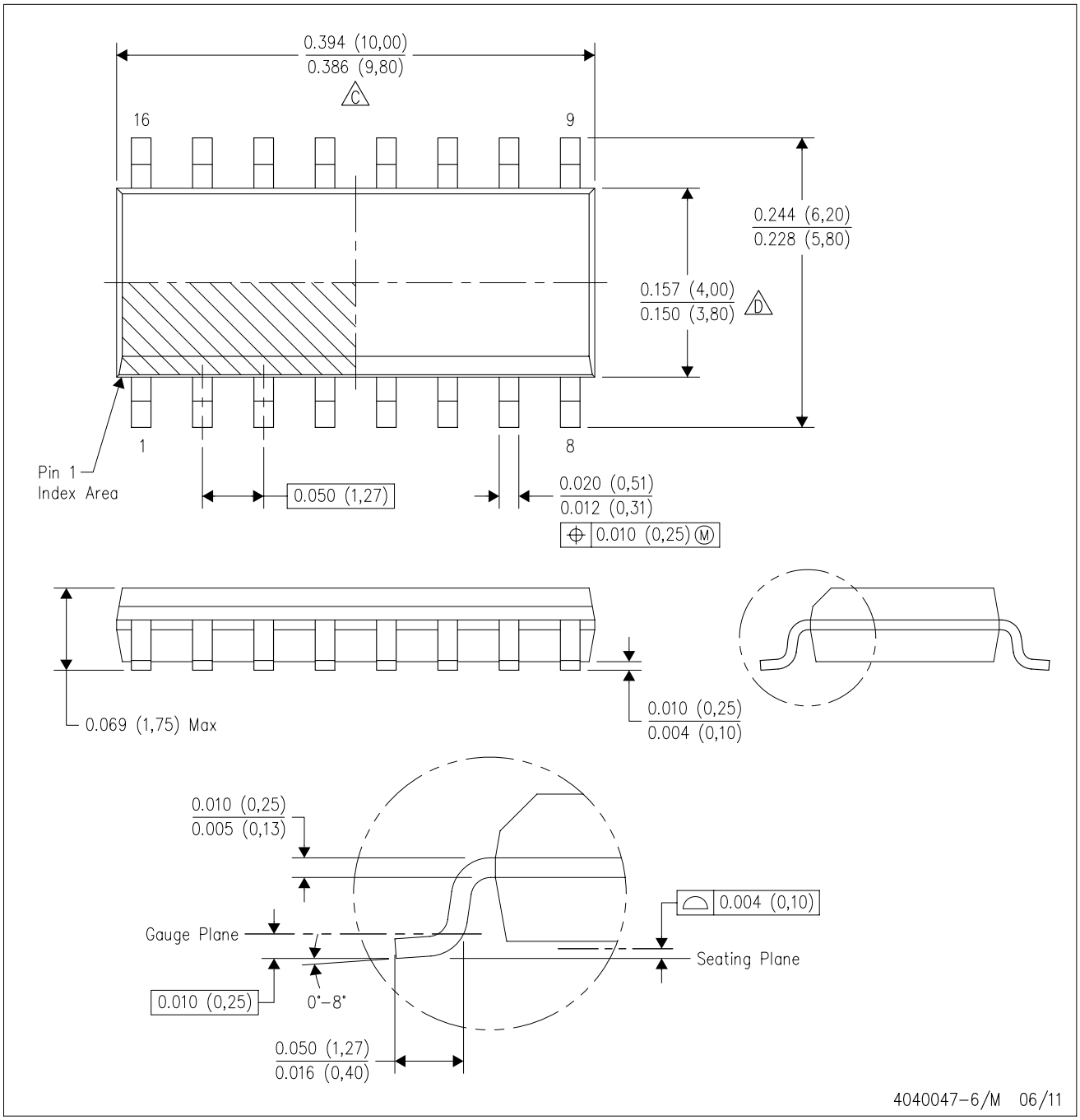

NOTES:
A. All linear dimensions are in inches (millimeters).
B. This drawing is subject to change without notice.
C. Body length does not include mold flash, protrusions, or gate burrs. Mold flash, protrusions, or gate burrs shall not exceed 0.006 (0,15) each side.
D. Body width does not include interlead flash. Interlead flash shall not exceed 0.017 (0,43) each side.
E. Reference JEDEC MS–012 variation AC.

PW0016A

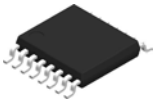

PACKAGE OUTLINE

TSSOP - 1.2 mm max height

SMALL OUTLINE PACKAGE

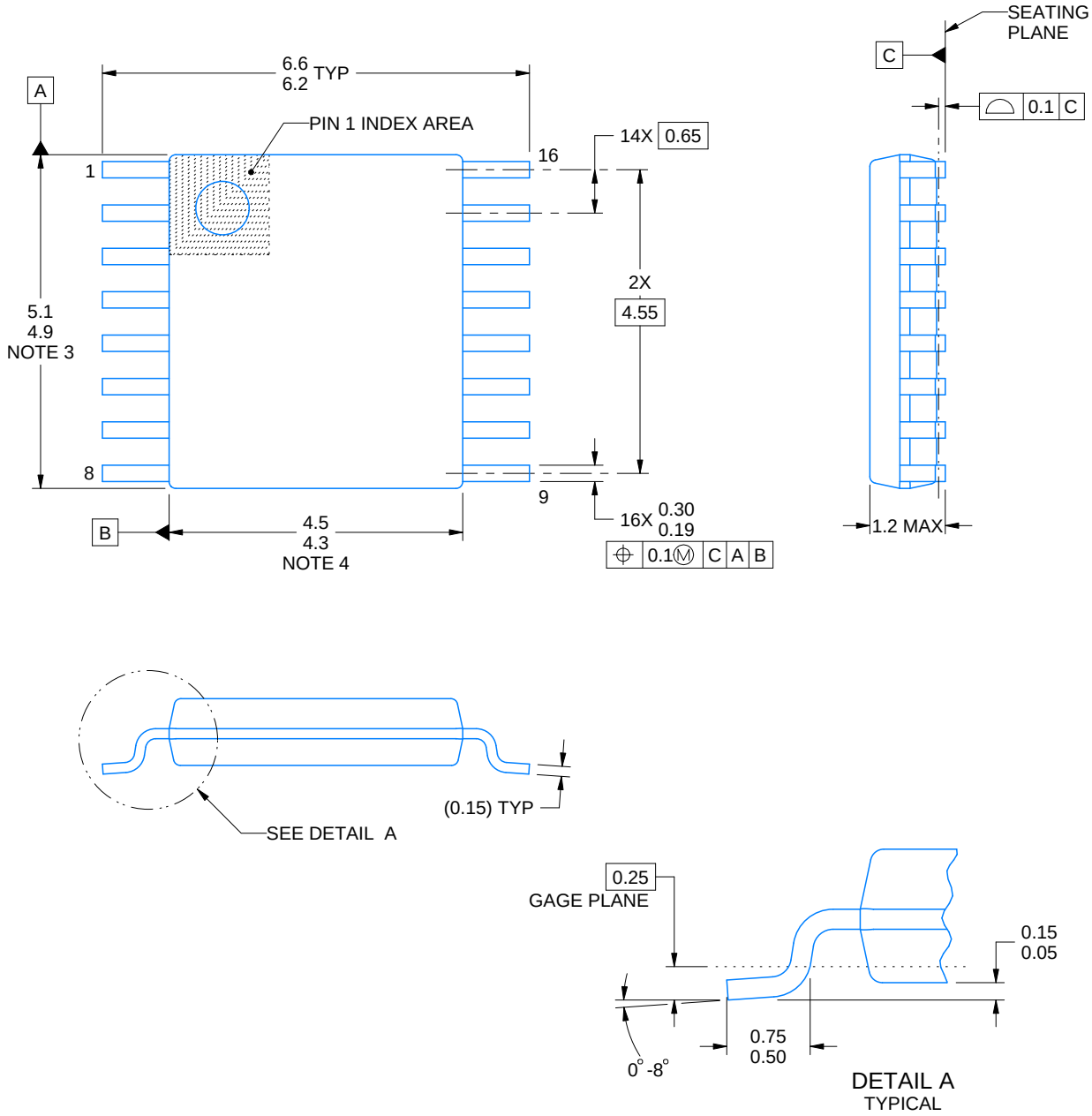

NOTES:

1. All linear dimensions are in millimeters. Any dimensions in parenthesis are for reference only. Dimensioning and tolerancing per ASME Y14.5M.
2. This drawing is subject to change without notice.
3. This dimension does not include mold flash, protrusions, or gate burrs. Mold flash, protrusions, or gate burrs shall not exceed 0.15 mm per side.
4. This dimension does not include interlead flash. Interlead flash shall not exceed 0.25 mm per side.
5. Reference JEDEC registration MO-153.

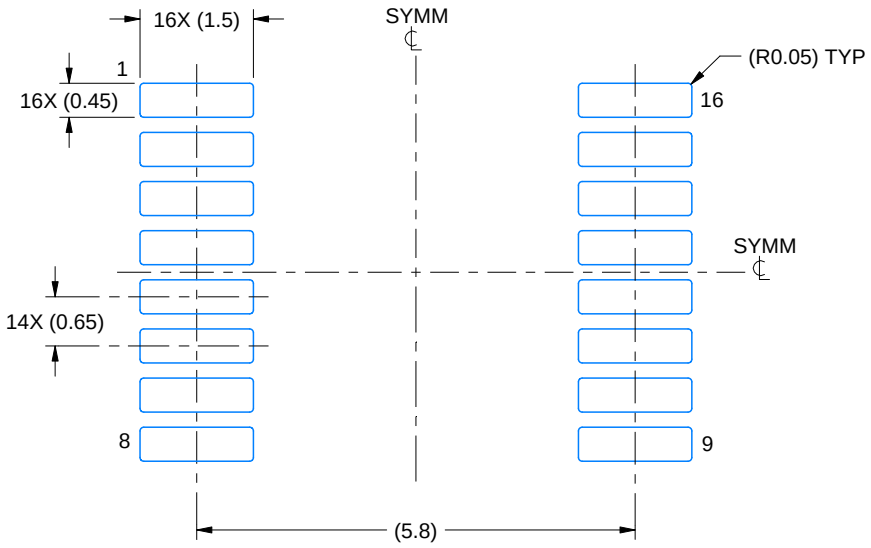

LAND PATTERN EXAMPLE
EXPOSED METAL SHOWN
SCALE: 10X

NON-SOLDER MASK DEFINED (PREFERRED)

SOLDER MASK DEFINED

SOLDER MASK DETAILS

4220204/A 02/2017

NOTES: (continued)

6. Publication IPC-7351 may have alternate designs.
7. Solder mask tolerances between and around signal pads can vary based on board fabrication site.

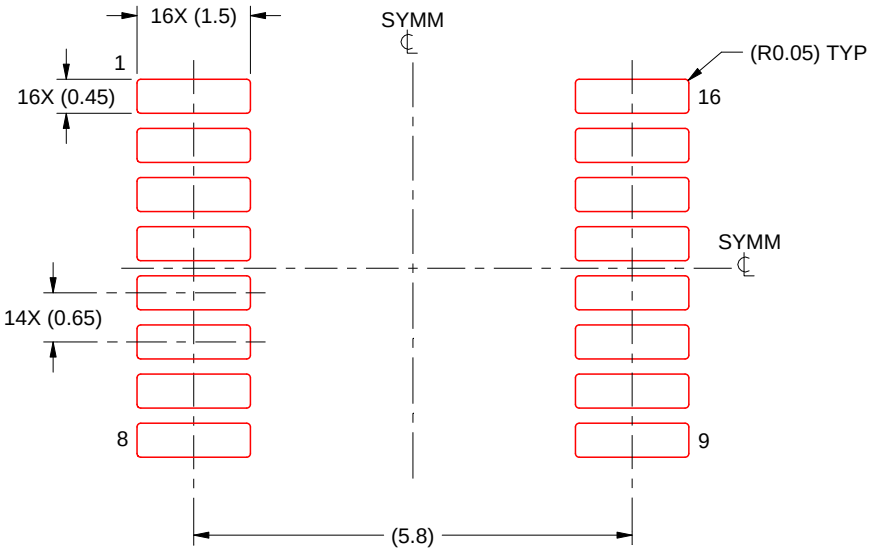

SOLDER PASTE EXAMPLE
BASED ON 0.125 mm THICK STENCIL
SCALE: 10X

4220204/A 02/2017

NOTES: (continued)

8. Laser cutting apertures with trapezoidal walls and rounded corners may offer better paste release. IPC-7525 may have alternate design recommendations.
9. Board assembly site may have different recommendations for stencil design.

MECHANICAL DATA

NS (R-PDSO-G)** **PLASTIC SMALL-OUTLINE PACKAGE**

14-PINS SHOWN

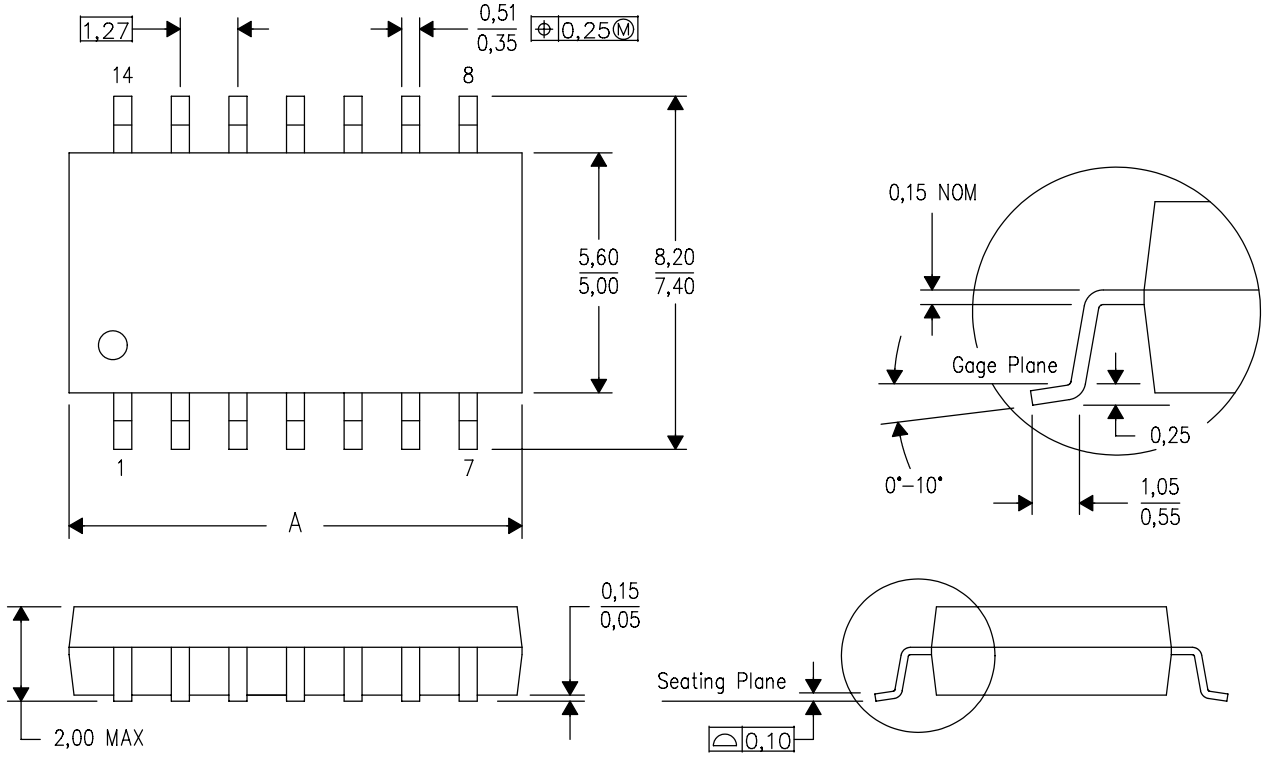

DIM \ PINS **	14	16	20	24
A MAX	10,50	10,50	12,90	15,30
A MIN	9,90	9,90	12,30	14,70

4040062/C 03/03

NOTES:
A. All linear dimensions are in millimeters.
B. This drawing is subject to change without notice.
C. Body dimensions do not include mold flash or protrusion, not to exceed 0,15.

J (R–GDIP–T**) CERAMIC DUAL IN–LINE PACKAGE

14 LEADS SHOWN

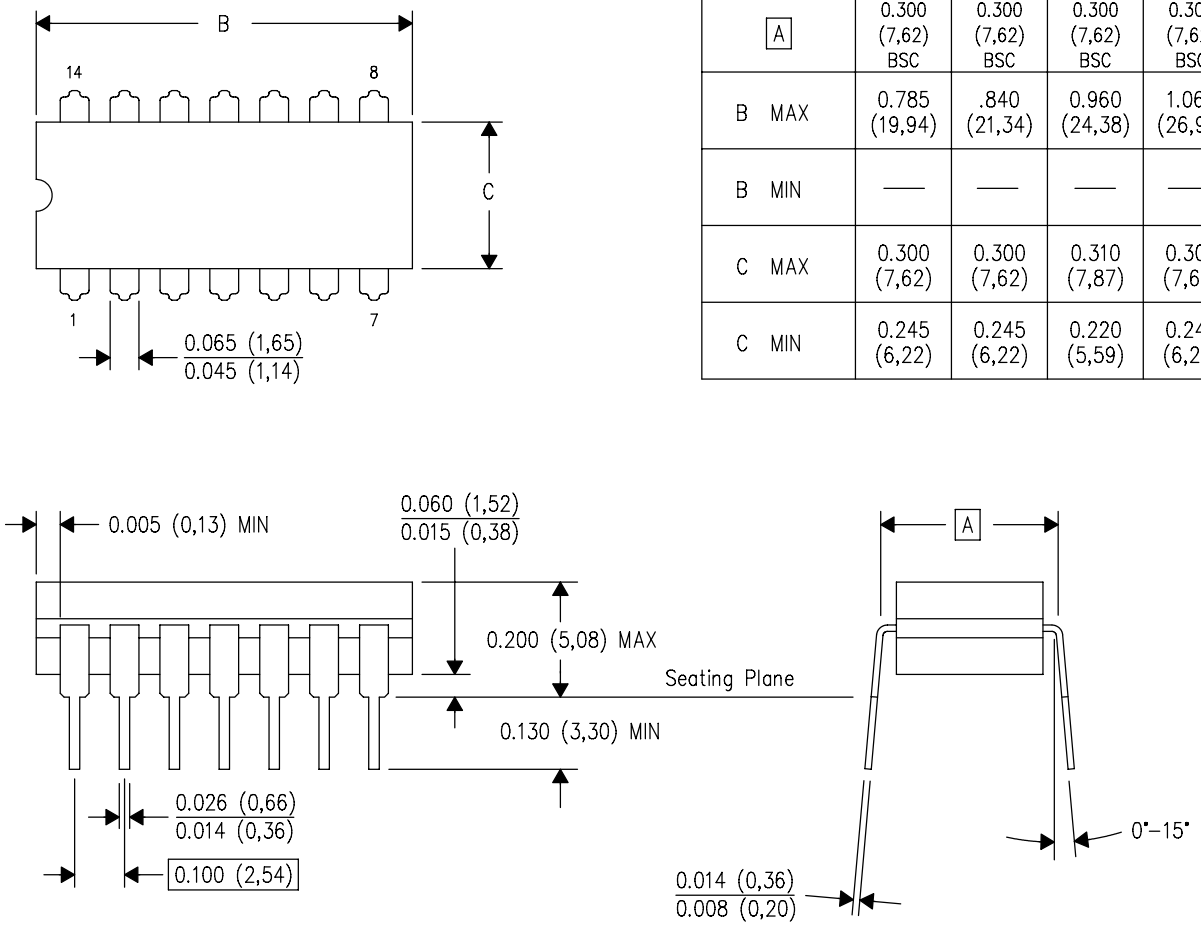

DIM \ PINS **	14	16	18	20
A	0.300 (7,62) BSC	0.300 (7,62) BSC	0.300 (7,62) BSC	0.300 (7,62) BSC
B MAX	0.785 (19,94)	.840 (21,34)	0.960 (24,38)	1.060 (26,92)
B MIN	—	—	—	—
C MAX	0.300 (7,62)	0.300 (7,62)	0.310 (7,87)	0.300 (7,62)
C MIN	0.245 (6,22)	0.245 (6,22)	0.220 (5,59)	0.245 (6,22)

4040083/F 03/03

NOTES:
- A. All linear dimensions are in inches (millimeters).
- B. This drawing is subject to change without notice.
- C. This package is hermetically sealed with a ceramic lid using glass frit.
- D. Index point is provided on cap for terminal identification only on press ceramic glass frit seal only.
- E. Falls within MIL STD 1835 GDIP1–T14, GDIP1–T16, GDIP1–T18 and GDIP1–T20.

N (R–PDIP–T**) PLASTIC DUAL–IN–LINE PACKAGE

16 PINS SHOWN

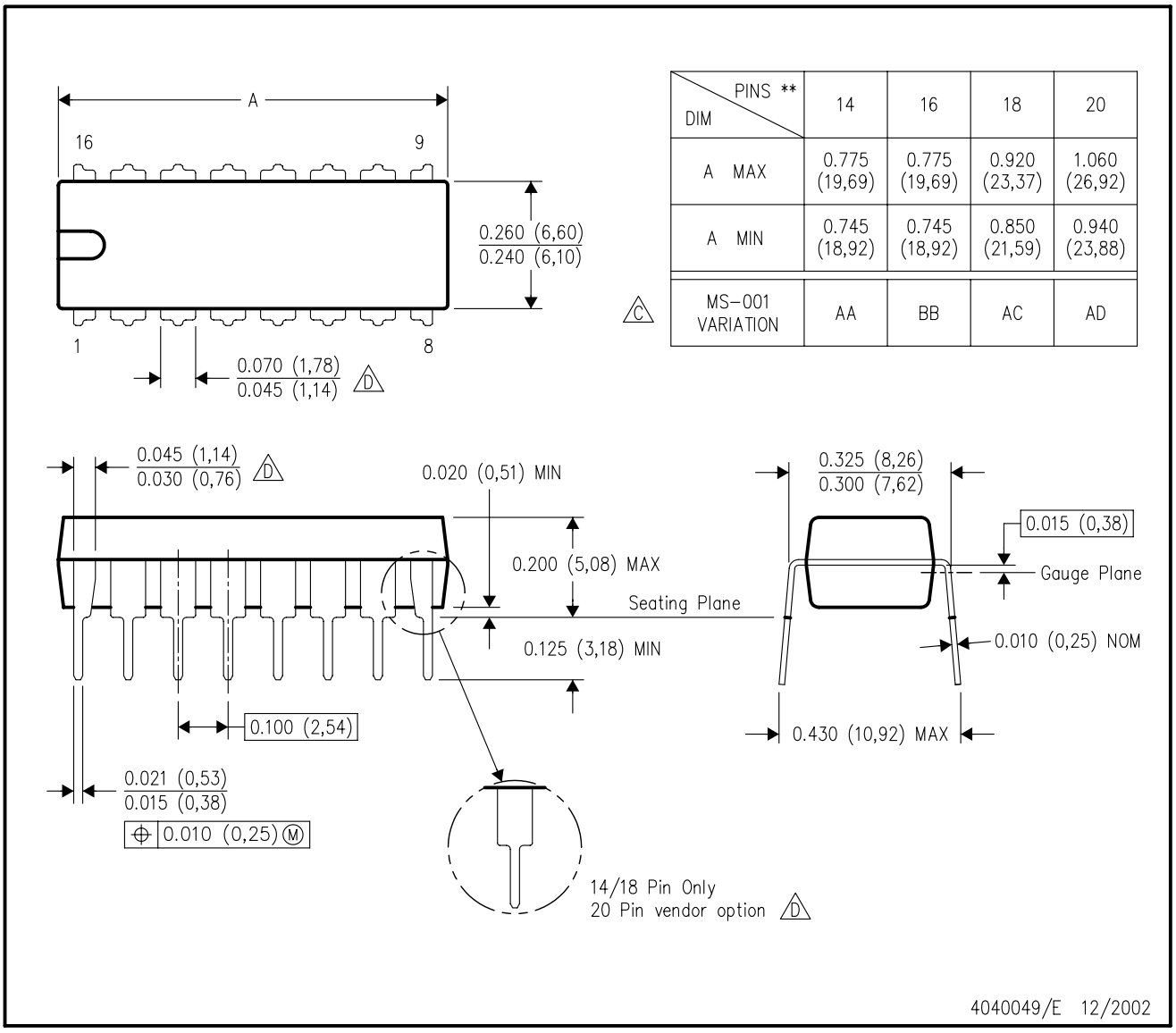

DIM \ PINS **	14	16	18	20
A MAX	0.775 (19,69)	0.775 (19,69)	0.920 (23,37)	1.060 (26,92)
A MIN	0.745 (18,92)	0.745 (18,92)	0.850 (21,59)	0.940 (23,88)
MS–001 VARIATION (C)	AA	BB	AC	AD

NOTES:
A. All linear dimensions are in inches (millimeters).
B. This drawing is subject to change without notice.
C. Falls within JEDEC MS–001, except 18 and 20 pin minimum body length (Dim A).
D. The 20 pin end lead shoulder width is a vendor option, either half or full width.

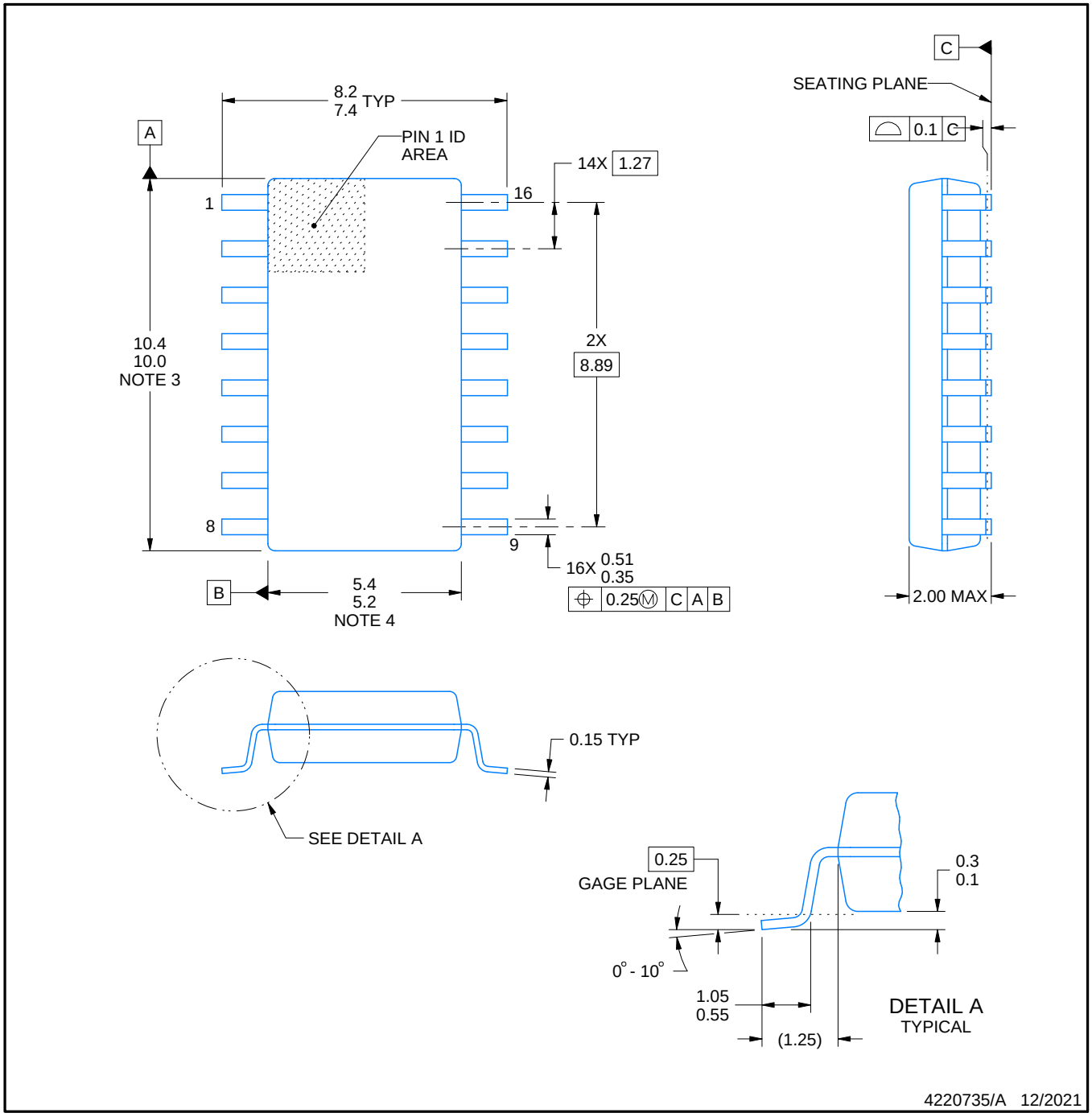

NOTES:

1. All linear dimensions are in millimeters. Dimensions in parenthesis are for reference only. Dimensioning and tolerancing per ASME Y14.5M.
2. This drawing is subject to change without notice.
3. This dimension does not include mold flash, protrusions, or gate burrs. Mold flash, protrusions, or gate burrs shall not exceed 0.15 mm, per side.
4. This dimension does not include interlead flash. Interlead flash shall not exceed 0.25 mm, per side.

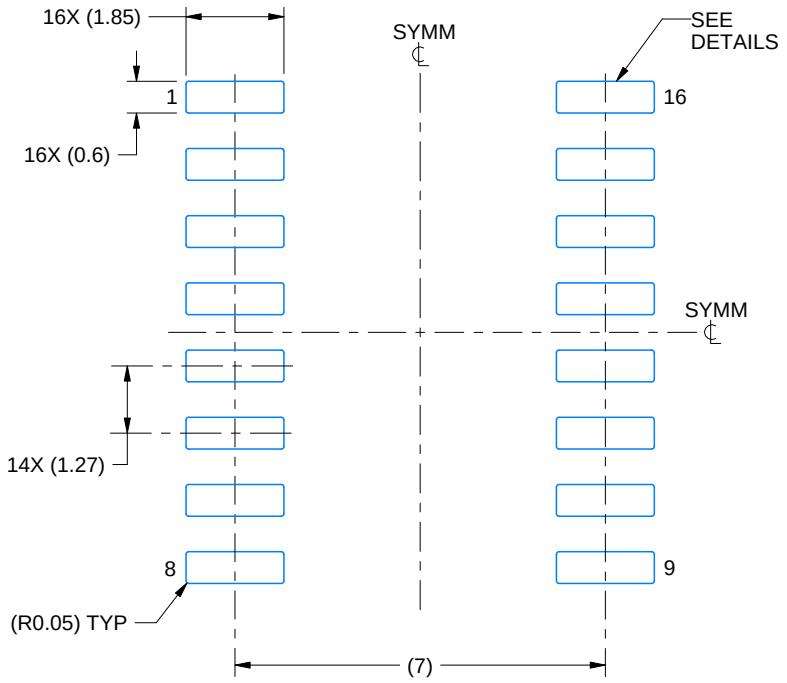

LAND PATTERN EXAMPLE
SCALE:7X

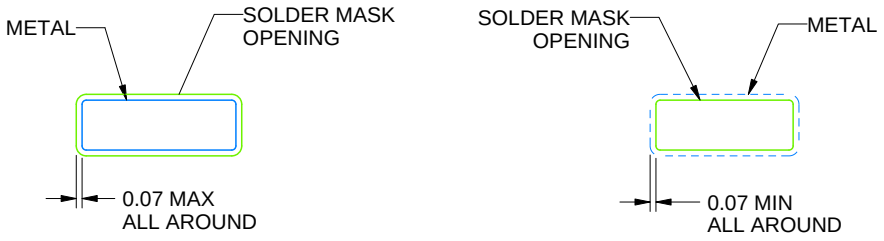

NON SOLDER MASK DEFINED

SOLDER MASK DEFINED

SOLDER MASK DETAILS

4220735/A 12/2021

NOTES: (continued)

5. Publication IPC-7351 may have alternate designs.
6. Solder mask tolerances between and around signal pads can vary based on board fabrication site.

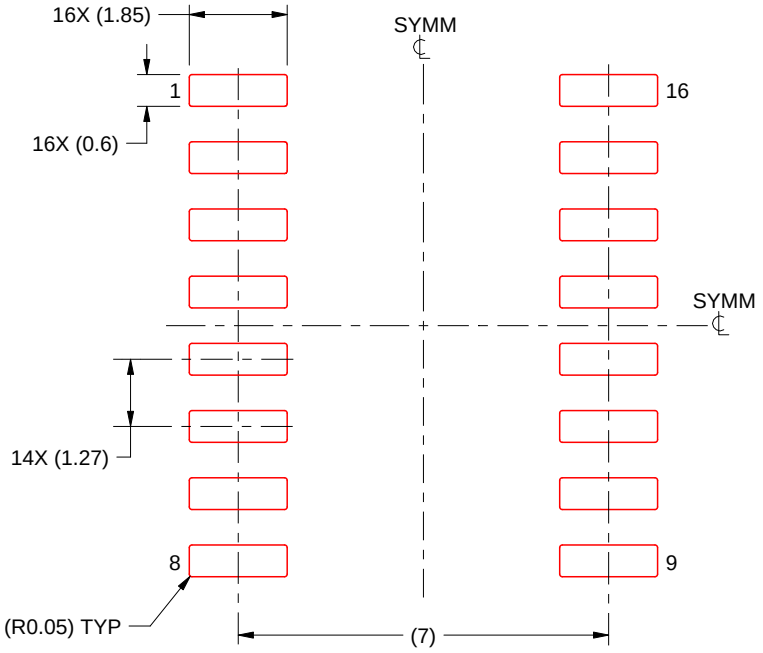

SOLDER PASTE EXAMPLE
BASED ON 0.125 mm THICK STENCIL
SCALE:7X

4220735/A 12/2021

NOTES: (continued)

7. Laser cutting apertures with trapezoidal walls and rounded corners may offer better paste release. IPC-7525 may have alternate design recommendations.
8. Board assembly site may have different recommendations for stencil design.

IMPORTANT NOTICE AND DISCLAIMER

TI PROVIDES TECHNICAL AND RELIABILITY DATA (INCLUDING DATA SHEETS), DESIGN RESOURCES (INCLUDING REFERENCE DESIGNS), APPLICATION OR OTHER DESIGN ADVICE, WEB TOOLS, SAFETY INFORMATION, AND OTHER RESOURCES “AS IS” AND WITH ALL FAULTS, AND DISCLAIMS ALL WARRANTIES, EXPRESS AND IMPLIED, INCLUDING WITHOUT LIMITATION ANY IMPLIED WARRANTIES OF MERCHANTABILITY, FITNESS FOR A PARTICULAR PURPOSE OR NON-INFRINGEMENT OF THIRD PARTY INTELLECTUAL PROPERTY RIGHTS.

These resources are intended for skilled developers designing with TI products. You are solely responsible for (1) selecting the appropriate TI products for your application, (2) designing, validating and testing your application, and (3) ensuring your application meets applicable standards, and any other safety, security, regulatory or other requirements.

These resources are subject to change without notice. TI grants you permission to use these resources only for development of an application that uses the TI products described in the resource. Other reproduction and display of these resources is prohibited. No license is granted to any other TI intellectual property right or to any third party intellectual property right. TI disclaims responsibility for, and you will fully indemnify TI and its representatives against, any claims, damages, costs, losses, and liabilities arising out of your use of these resources.

TI’s products are provided subject to TI’s Terms of Sale or other applicable terms available either on ti.com or provided in conjunction with such TI products. TI’s provision of these resources does not expand or otherwise alter TI’s applicable warranties or warranty disclaimers for TI products.

TI objects to and rejects any additional or different terms you may have proposed.

Mailing Address: Texas Instruments, Post Office Box 655303, Dallas, Texas 75265
Copyright © 2025, Texas Instruments Incorporated