SN74AHC138-Q1 Automotive 3-Line to 8-Line Decoders/Demultiplexers

1 Features

- AEC-Q100 qualified for automotive applications:
  - Device temperature grade 1: -40°C to +125°C
  - Device HBM ESD classification level 2
  - Device CDM ESD classification level C4B
- Available in wettable flank QFN package
- Operating range 2V to 5.5V V_{CC}
- Low delay, 10.5ns (V_{CC} = 5V, C_L = 50pF
- Latch-up performance exceeds 250mA per JESD 17

2 Applications

- Memory device selection with shared data bus
- Reduce required number of outputs for chip select applications
- Route data

3 Description

The SN74AHC138-Q1 is a three to eight decoder with one standard output strobe (G_2) and two active low output strobes ($\overline{G}_1$ and $\overline{G}_0$). When the outputs are gated by any of the strobe inputs, they are all forced into the high state. When the outputs are not disabled by the strobe inputs, only the selected output is low while all others are high.

Package Information

PART NUMBER	PACKAGE(1)	PACKAGE SIZE(2)	BODY SIZE (NOM)(3)
SN74AHC138-Q1	WBQB (WQFN, 16)	3.5mm × 2.5mm	3.5mm × 2.5mm
	PW (TSSOP, 16)	6.4mm × 5mm	5mm × 4.4mm

(1) For more information, see Section 11.
(2) The package size (length × width) is a nominal value and includes pins, where applicable
(3) The body size (length × width) is a nominal value and does not include pins.

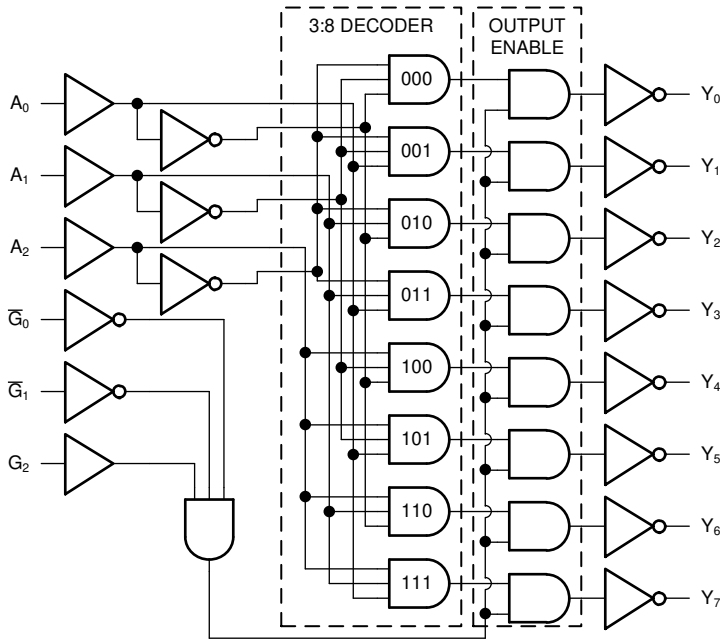

Logic Diagram (Positive Logic)

An IMPORTANT NOTICE at the end of this data sheet addresses availability, warranty, changes, use in safety-critical applications, intellectual property matters and other important disclaimers. PRODUCTION DATA.

Table of Contents

1 Features....1
2 Applications....1
3 Description....1
4 Pin Configuration and Functions....3
5 Specifications....4
5.1 Absolute Maximum Ratings....4
5.2 ESD Ratings....4
5.3 Recommended Operating Conditions....4
5.4 Thermal Information....5
5.5 Electrical Characteristics....5
5.6 Switching Characteristics....5
5.7 Noise Characteristics....6
5.8 Typical Characteristics....7
6 Parameter Measurement Information....9
7 Detailed Description....10
7.1 Overview....10
7.2 Functional Block Diagram....10
7.3 Feature Description....10
7.4 Device Functional Modes....12
8 Application and Implementation....13
8.1 Application Information....13
8.2 Typical Application....13
8.3 Design Requirements....13
8.4 Detailed Design Procedure....15
8.5 Application Curve....15
8.6 Power Supply Recommendations....15
8.7 Layout....16
9 Device and Documentation Support....18
9.1 Receiving Notification of Documentation Updates....18
9.2 Support Resources....18
9.3 Trademarks....18
9.4 Electrostatic Discharge Caution....18
9.5 Glossary....18
10 Revision History....18
11 Mechanical, Packaging, and Orderable Information....18

Copyright © 2024 Texas Instruments Incorporated

4 Pin Configuration and Functions

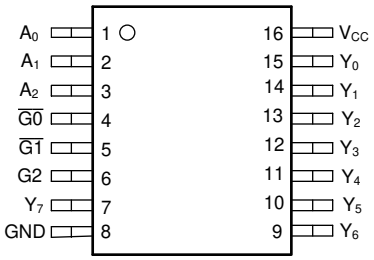

Figure 4-1. PW Package, 16-Pin TSSOP (Top View)

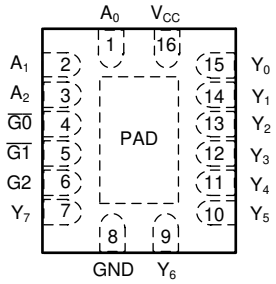

Figure 4-2. WBQB Package, 16-Pin WQFN (Top View)

Table 4-1. Pin Functions

PIN		TYPE[1]	DESCRIPTION
NAME	NO.		
A_0	1	I	Address select 0
A_1	2	I	Address select 1
A_2	3	I	Address select 2
$\overline{G}_0$	4	I	Output strobe 0, active low
$\overline{G}_1$	5	I	Output strobe 1, active low
G_2	6	I	Output strobe 2
Y_7	7	O	Output 7
GND	8	G	Ground
Y_6	9	O	Output 6
Y_5	10	O	Output 5
Y_4	11	O	Output 4
Y_3	12	O	Output 3
Y_2	13	O	Output 2
Y_1	14	O	Output 1
Y_0	15	O	Output 0
V_{CC}	16	P	Positive supply
Thermal pad[2]			The thermal pad can be connected to GND or left floating. Do not connect to any other signal or supply.

(1) Signal Types: I = Input, O = Output, I/O = Input or Output, P = Power, G = Ground.
(2) WBQB package only.

Copyright © 2024 Texas Instruments Incorporated

5 Specifications

5.1 Absolute Maximum Ratings

over operating free-air temperature range (unless otherwise noted)[1]

			MIN	MAX	UNIT
V_{CC}	Supply voltage range		–0.5	7	V
V_I	Input voltage range[2]		–0.5	7	V
V_O	Output voltage range[2]		–0.5	V_{CC} + 0.5	V
I_{IK}	Input clamp current	V_I < -0.5V		-20	mA
I_{OK}	Output clamp current	V_O < -0.5V or V_O > V_{CC} + 0.5V		±20	mA
I_O	Continuous output current	V_O = 0 to V_{CC}		±25	mA
	Continuous output current through V_{CC} or GND			±75	mA
T_J	Junction temperature			150	°C
T_{stg}	Storage temperature		-65	150	°C

(1) Operation outside the *Absolute Maximum Ratings* may cause permanent device damage. Absolute maximum ratings do not imply functional operation of the device at these or any other conditions beyond those listed under *Recommended Operating Conditions*. If briefly operating outside the *Recommended Operating Conditions* but within the *Absolute Maximum Ratings*, the device may not sustain damage, but it may not be fully functional. Operating the device in this manner may affect device reliability, functionality, performance, and shorten the device lifetime.
(2) The input and output voltage ratings may be exceeded if the input and output current ratings are observed.

5.2 ESD Ratings

			VALUE	UNIT
$V_{(ESD)}$	Electrostatic discharge	Human body model (HBM), per AEC Q100-002 HBM ESD Classification Level 2[1]	±2000	V
		Charged device model (CDM), per AEC Q100-011 CDM ESD Classification Level C4B	±1000	

(1) AEC Q100-002 indicate that HBM stressing shall be in accordance with the ANSI/ESDA/JEDEC JS-001 specification.

5.3 Recommended Operating Conditions

over operating free-air temperature range (unless otherwise noted)

Specification	Description	Condition	MIN	MAX	UNIT
V_{CC}	Supply voltage		2	5.5	V
V_{IH}	High-level input voltage	V_{CC} = 2V	1.5		V
		V_{CC} = 3V	2.1		
		V_{CC} = 5.5V	3.85		
V_{IL}	Low-Level input voltage	V_{CC} = 2V		0.5	V
		V_{CC} = 3V		0.9	
		V_{CC} = 5.5V		1.65	
V_I	Input Voltage		0	5.5	V
V_O	Ouptut Voltage		0	V_{CC}	V
I_{OH}	High-level output current	V_{CC} = 2V		-50	µA
		V_{CC} = 3.3V ± 0.3V		-4	mA
		V_{CC} = 5V ± 0.5V		-8	mA
I_{OL}	Low-level output current	V_{CC} = 2V		50	µA
		V_{CC} = 3.3V ± 0.3V		4	mA
		V_{CC} = 5V ± 0.5V		8	mA
Δt/Δv	Input transition rise or fall rate	V_{CC} = 3.3V ± 0.3V		100	ns/V
		V_{CC} = 5V ± 0.5V		20	ns/V

Copyright © 2024 Texas Instruments Incorporated

5.3 Recommended Operating Conditions (continued)

over operating free-air temperature range (unless otherwise noted)

Specification	Description	Condition	MIN	MAX	UNIT
T_A	Operating free-air temperature		–40	125	°C

5.4 Thermal Information

THERMAL METRIC[1]		WBQB (WQFN)	PW (TSSOP)	UNIT
		16 PINS	16 PINS	
$R_{\theta JA}$	Junction-to-ambient thermal resistance	105.6	135.9	°C/W
$R_{\theta JC(top)}$	Junction-to-case (top) thermal resistance	96.6	70.3	°C/W
$R_{\theta JB}$	Junction-to-board thermal resistance	75.4	81.3	°C/W
Ψ_{JT}	Junction-to-top characterization parameter	19.1	22.5	°C/W
Ψ_{JB}	Junction-to-board characterization parameter	75.4	80.8	°C/W
$R_{\theta JC(bot)}$	Junction-to-case (bottom) thermal resistance	56.1	N/A	°C/W

(1) For more information about traditional and new thermal metrics, see the Semiconductor and IC Package Thermal Metrics application report.

5.5 Electrical Characteristics

over operating free-air temperature range (unless otherwise noted)

PARAMETER	TEST CONDITIONS	V_{CC}	T_A = 25°C			-40°C to 125°C			UNIT
			MIN	TYP	MAX	MIN	TYP	MAX	
V_{OH}	I_{OH} = –50µA	2V to 5.5V	V_{CC}-0.1	V_{CC}		V_{CC}-0.1	V_{CC}		V
	I_{OH} = −4mA	3V	2.58			2.48			
	I_{OH} = −8mA	4.5V	3.94			3.8			
V_{OL}	I_{OL} = 50µA	2V to 5.5V			0.1			0.1	V
	I_{OL} = 4mA	3V			0.36			0.44	
	I_{OL} = 8mA	4.5V			0.36			0.44	
I_I	V_I = 5.5V or GND and V_{CC} = 0V to 5.5V	0V to 5.5V			±0.1			±1	µA
I_{CC}	V_I = V_{CC} or GND, I_O = 0, and V_{CC} = 5.5V	5.5V			4			40	µA
C_I	V_I = V_{CC} or GND	5V		2	10			10	pF
C_{PD}	No load, F = 1MHz	5V		87					pF

5.6 Switching Characteristics

over operating free-air temperature range(unless otherwise noted). See *Parameter Measurement Information*

PARAMETER	FROM (INPUT)	TO (OUTPUT)	LOAD CAPACITANCE	V_{CC}	T_A = 25°C			-40°C to 85°C			-40°C to 125°C			UNIT
					MIN	TYP	MAX	MIN	TYP	MAX	MIN	TYP	MAX	
t_{PHL}	A_0, A_1, A_2	Any Y	C_L = 15pF	3.3V ± 0.3V		7.2	11	1		13	1		13	ns
t_{PLH}	A_0, A_1, A_2	Any Y	C_L = 15pF	3.3V ± 0.3V		7.2	11	1		13	1		13	ns
t_{PHL}	G_2	Any Y	C_L = 15pF	3.3V ± 0.3V		8.1	12.8	1		15	1		17	ns
t_{PLH}	G_2	Any Y	C_L = 15pF	3.3V ± 0.3V		8.1	12.8	1		15	1		17	ns
t_{PHL}	$\overline{G}_0$, $\overline{G}_1$	Any Y	C_L = 15pF	3.3V ± 0.3V		8.1	11.4	1		13.5	1		16.5	ns
t_{PLH}	$\overline{G}_0$, $\overline{G}_1$	Any Y	C_L = 15pF	3.3V ± 0.3V		8.1	11.4	1		13.5	1		16.5	ns

Copyright © 2024 Texas Instruments Incorporated

5.6 Switching Characteristics (continued)

over operating free-air temperature range(unless otherwise noted). See *Parameter Measurement Information*

PARAMETER	FROM (INPUT)	TO (OUTPUT)	LOAD CAPACITANCE	V_{CC}	T_A = 25°C			-40°C to 85°C			-40°C to 125°C			UNIT
					MIN	TYP	MAX	MIN	TYP	MAX	MIN	TYP	MAX	
t_{PHL}	A_0, A_1, A_2	Any Y	C_L = 50pF	3.3V ± 0.3V		9.7	14.5	1		16.5	1		16.5	ns
t_{PLH}	A_0, A_1, A_2	Any Y	C_L = 50pF	3.3V ± 0.3V		9.7	14.5	1		16.5	1		16.5	ns
t_{PHL}	G_2	Any Y	C_L = 50pF	3.3V ± 0.3V		10.6	16.3	1		18.5	1		20.5	ns
t_{PLH}	G_2	Any Y	C_L = 50pF	3.3V ± 0.3V		10.6	16.3	1		18.5	1		20.5	ns
t_{PHL}	$\overline{G}_0$, $\overline{G}_1$	Any Y	C_L = 50pF	3.3V ± 0.3V		10.6	14.9	1		17	1		20	ns
t_{PLH}	$\overline{G}_0$, $\overline{G}_1$	Any Y	C_L = 50pF	3.3V ± 0.3V		10.6	14.9	1		17	1		20	ns
t_{PHL}	A_0, A_1, A_2	Any Y	C_L = 15pF	5V ± 0.5V		5	7.2	1		8.5	1		8.5	ns
t_{PLH}	A_0, A_1, A_2	Any Y	C_L = 15pF	5V ± 0.5V		5	7.2	1		8.5	1		8.5	ns
t_{PHL}	G_2	Any Y	C_L = 15pF	5V ± 0.5V		5.4	8.1	1		9.5	1		11	ns
t_{PLH}	G_2	Any Y	C_L = 15pF	5V ± 0.5V		5.4	8.1	1		9.5	1		11	ns
t_{PHL}	$\overline{G}_0$, $\overline{G}_1$	Any Y	C_L = 15pF	5V ± 0.5V		5.7	8.1	1		9.5	1		11	ns
t_{PLH}	$\overline{G}_0$, $\overline{G}_1$	Any Y	C_L = 15pF	5V ± 0.5V		5.7	8.1	1		9.5	1		11	ns
t_{PHL}	A_0, A_1, A_2	Any Y	C_L = 50pF	5V ± 0.5V		6.5	9.5	1		10.5	1		10.5	ns
t_{PLH}	A_0, A_1, A_2	Any Y	C_L = 50pF	5V ± 0.5V		6.5	9.5	1		10.5	1		10.5	ns
t_{PHL}	G_2	Any Y	C_L = 50pF	5V ± 0.5V		6.9	10.1	1		11.5	1		13	ns
t_{PLH}	G_2	Any Y	C_L = 50pF	5V ± 0.5V		6.9	10.1	1		11.5	1		13	ns
t_{PHL}	A_0, A_1, A_2	Any Y	C_L = 50pF	5V ± 0.5V		7.2	10.1	1		11.5	1		13	ns
t_{PLH}	A_0, A_1, A_2	Any Y	C_L = 50pF	5V ± 0.5V		7.2	10.1	1		11.5	1		13	ns

5.7 Noise Characteristics

V_{CC} = 5V, C_L = 50pF, T_A = 25°C

PARAMETER	DESCRIPTION	MIN	TYP	MAX	UNIT
$V_{OL(P)}$	Quiet output, maximum dynamic V_{OL}		0.2	0.8	V
$V_{OL(V)}$	Quiet output, minimum dynamic V_{OL}	-0.9	-0.2		V
$V_{OH(V)}$	Quiet output, minimum dynamic V_{OH}	4.4	4.7		V
$V_{IH(D)}$	High-level dynamic input voltage	3.5			V
$V_{IL(D)}$	Low-level dynamic input voltage			1.5	V

Copyright © 2024 Texas Instruments Incorporated

5.8 Typical Characteristics

T_A = 25°C (unless otherwise noted)

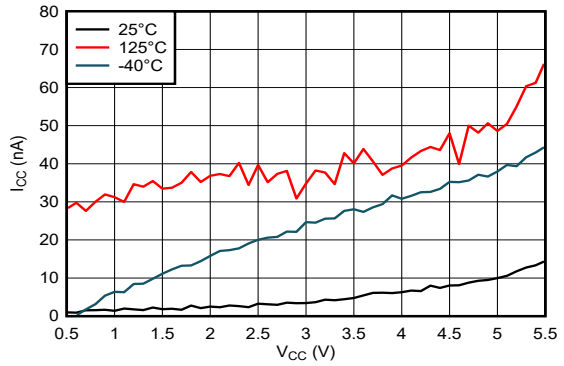

Figure 5-1. Supply Current Across Supply Voltage

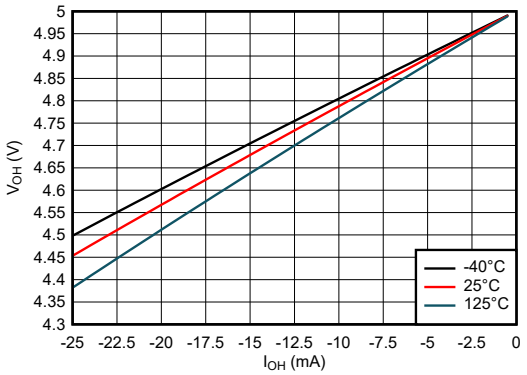

Figure 5-2. Output Voltage vs Current in HIGH State; 5V Supply

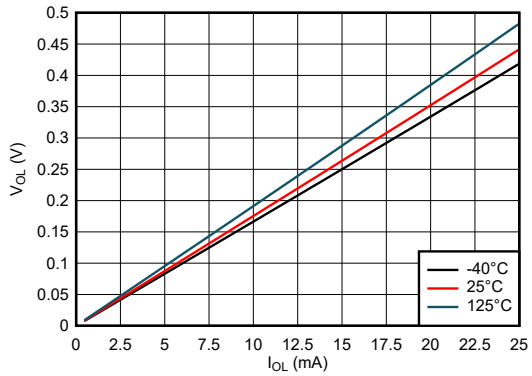

Figure 5-3. Output Voltage vs Current in LOW State; 5V Supply

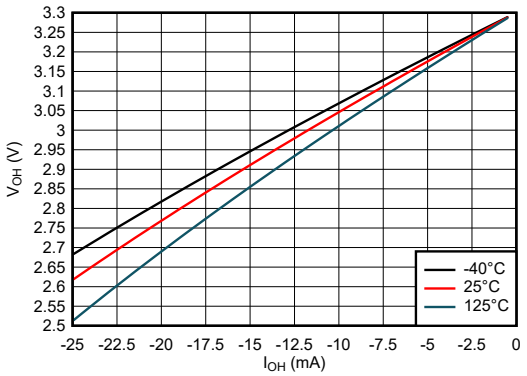

Figure 5-4. Output Voltage vs Current in HIGH State; 3.3V Supply

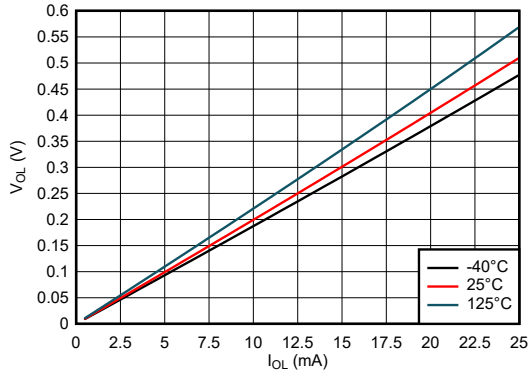

Figure 5-5. Output Voltage vs Current in LOW State; 3.3V Supply

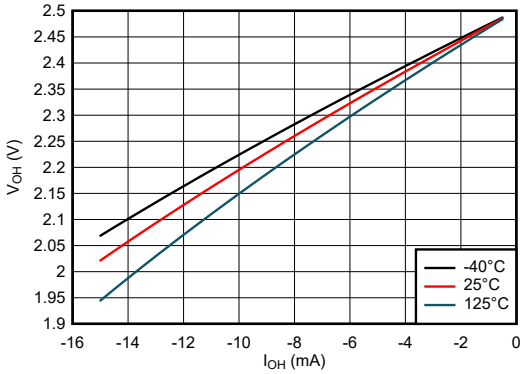

Figure 5-6. Output Voltage vs Current in HIGH State; 2.5V Supply

5.8 Typical Characteristics (continued)

T_A = 25°C (unless otherwise noted)

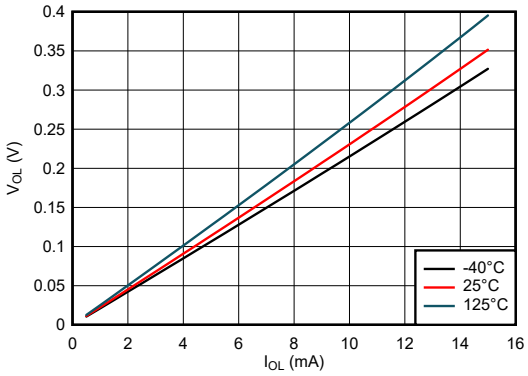

Figure 5-7. Output Voltage vs Current in LOW State; 2.5V Supply

Copyright © 2024 Texas Instruments Incorporated

6 Parameter Measurement Information

Phase relationships between waveforms were chosen arbitrarily for the examples listed in the following table. All input pulses are supplied by generators having the following characteristics: PRR ≤ 1MHz, Z_O = 50Ω, t_t < 2.5ns.

The outputs are measured individually with one input transition per measurement.

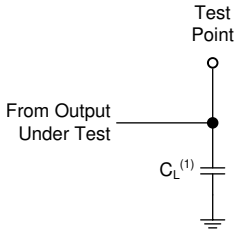

(1) C_L includes probe and test-fixture capacitance.

Figure 6-1. Load Circuit for Push-Pull Outputs

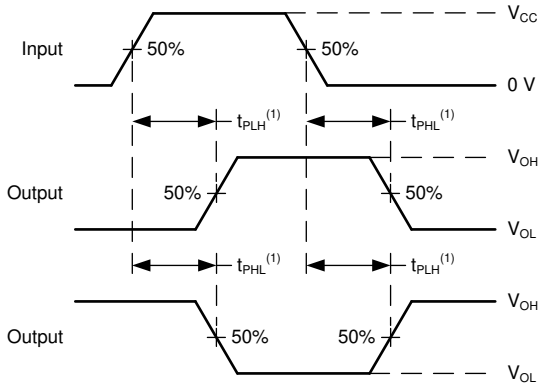

(1) The greater between t_{PLH} and t_{PHL} is the same as t_{pd}.

Figure 6-2. Voltage Waveforms Propagation Delays

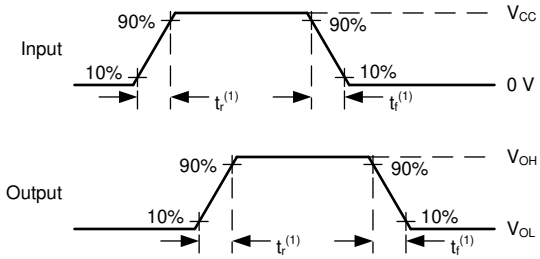

(1) The greater between t_r and t_f is the same as t_t.

Figure 6-3. Voltage Waveforms, Input and Output Transition Times

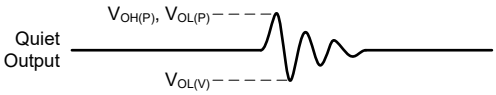

Noise values measured with all other outputs simultaneously switching.

Figure 6-4. Voltage Waveforms, Noise

7 Detailed Description

7.1 Overview

The SN74AHC138-Q1 is a 3-to-8 decoder/demultiplexer. The three input pins (A_0, A_1, and A_2) select which output is active. The selected output is pulled LOW, while the remaining outputs are all HIGH. The conditions at the binary-select inputs at the three enable inputs select one of eight output lines. Two active-low and one active-high enable inputs reduce the requirement for external gates or inverters when expanding. A 24-line decoder can be implemented without external inverters, and a 32-line decoder requires only one inverter. A strobe input (G2, $\overline{G}_1$, or $\overline{G}_0$) can be used as a data input for demultiplexing applications.

7.2 Functional Block Diagram

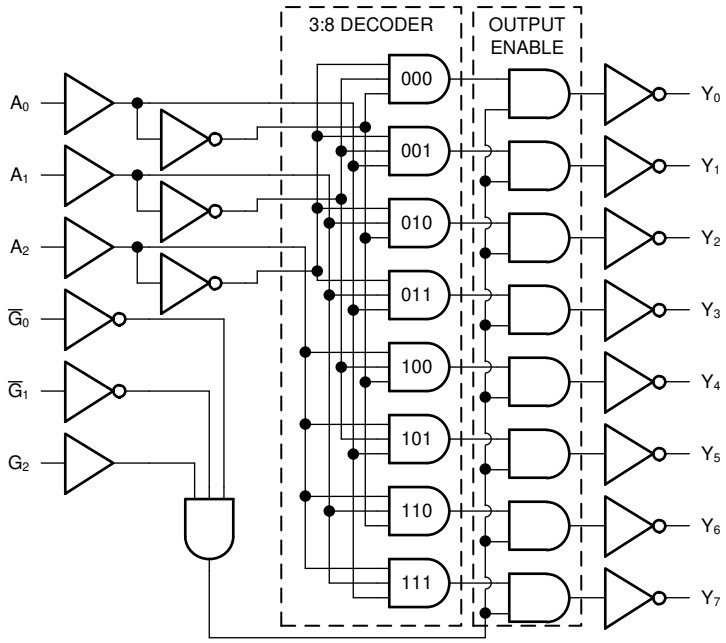

7.3 Feature Description

7.3.1 Balanced CMOS Push-Pull Outputs

This device includes balanced CMOS push-pull outputs. The term *balanced* indicates that the device can sink and source similar currents. The drive capability of this device may create fast edges into light loads, so routing and load conditions should be considered to prevent ringing. Additionally, the outputs of this device are capable of driving larger currents than the device can sustain without being damaged. It is important to limit the output power of the device to avoid damage due to overcurrent. The electrical and thermal limits defined in the *Absolute Maximum Ratings* must be followed at all times.

Unused push-pull CMOS outputs should be left disconnected.

Copyright © 2024 Texas Instruments Incorporated

7.3.2 Standard CMOS Inputs

This device includes standard CMOS inputs. Standard CMOS inputs are high impedance and are typically modeled as a resistor in parallel with the input capacitance given in the *Electrical Characteristics*. The worst case resistance is calculated with the maximum input voltage, given in the *Absolute Maximum Ratings*, and the maximum input leakage current, given in the *Electrical Characteristics*, using Ohm's law (R = V ÷ I).

Standard CMOS inputs require that input signals transition between valid logic states quickly, as defined by the input transition time or rate in the *Recommended Operating Conditions* table. Failing to meet this specification will result in excessive power consumption and could cause oscillations. More details can be found in *Implications of Slow or Floating CMOS Inputs*.

Do not leave standard CMOS inputs floating at any time during operation. Unused inputs must be terminated at V_{CC} or GND. If a system will not be actively driving an input at all times, then a pull-up or pull-down resistor can be added to provide a valid input voltage during these times. The resistor value will depend on multiple factors; a 10kΩ resistor, however, is recommended and will typically meet all requirements.

7.3.3 Wettable Flanks

This device includes wettable flanks for at least one package. See the *Features* section on the front page of the data sheet for which packages include this feature.

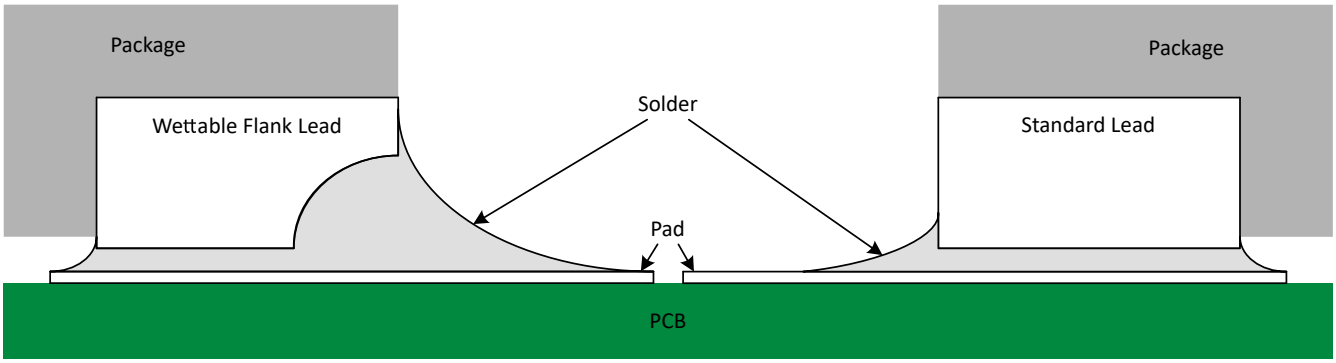

Figure 7-1. Simplified Cutaway View of Wettable-Flank QFN Package and Standard QFN Package After Soldering

Wettable flanks help improve side wetting after soldering, which makes QFN packages easier to inspect with automatic optical inspection (AOI). As shown in Figure 7-1, a wettable flank can be dimpled or step-cut to provide additional surface area for solder adhesion which assists in reliably creating a side fillet. See the mechanical drawing for additional details.

7.3.4 Clamp Diode Structure

As Figure 7-2 shows, the outputs to this device have both positive and negative clamping diodes, and the inputs to this device have negative clamping diodes only.

CAUTION

Voltages beyond the values specified in the *Absolute Maximum Ratings* table can cause damage to the device. The input and output voltage ratings may be exceeded if the input and output clamp-current ratings are observed.

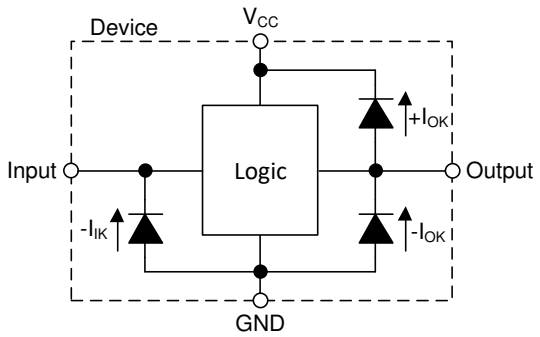

Figure 7-2. Electrical Placement of Clamping Diodes for Each Input and Output

7.4 Device Functional Modes

Table 7-1. Function Table

INPUTS[1]						OUTPUTS[2]							
ENABLE			SELECT										
G_2	$\overline{G}_1$	$\overline{G}_0$	A_2	A_1	A_0	Y_0	Y_1	Y_2	Y_3	Y_4	Y_5	Y_6	Y_7
X	H	X	X	X	X	H	H	H	H	H	H	H	H
X	X	H	X	X	X	H	H	H	H	H	H	H	H
L	X	X	X	X	X	H	H	H	H	H	H	H	H
H	L	L	L	L	L	L	H	H	H	H	H	H	H
H	L	L	L	L	H	H	L	H	H	H	H	H	H
H	L	L	L	H	L	H	H	L	H	H	H	H	H
H	L	L	L	H	H	H	H	H	L	H	H	H	H
H	L	L	H	L	L	H	H	H	H	L	H	H	H
H	L	L	H	L	H	H	H	H	H	H	L	H	H
H	L	L	H	H	L	H	H	H	H	H	H	L	H
H	L	L	H	H	H	H	H	H	H	H	H	H	L

(1) L = Low; H = High, X = Don't care
(2) L = Driving low; H = Driving high

Copyright © 2024 Texas Instruments Incorporated

8 Application and Implementation

Note

Information in the following applications sections is not part of the TI component specification, and TI does not warrant its accuracy or completeness. TI's customers are responsible for determining suitability of components for their purposes, as well as validating and testing their design implementation to confirm system functionality.

8.1 Application Information

In this application, four 3-to-8 decoders are used to select l output from 32 using a 5-bit input as shown in Figure 8-1. The selected output is in the low state, while all other outputs are in the high state. One external inverter is required to complete the circuit.

8.2 Typical Application

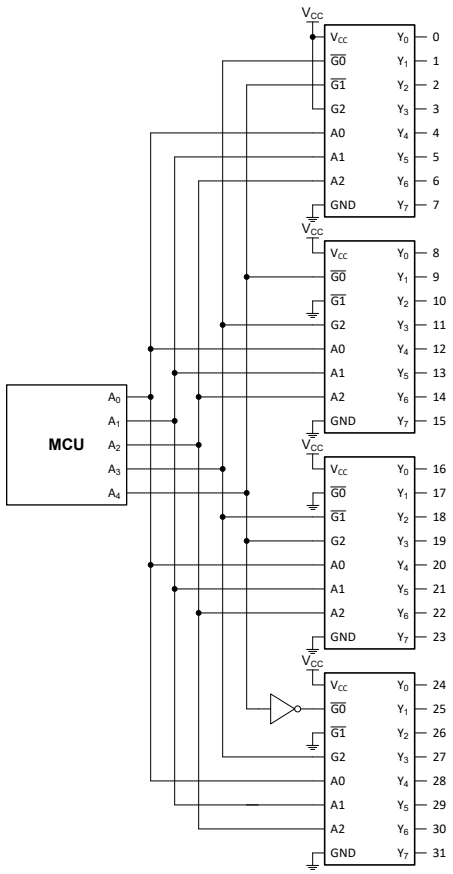

Figure 8-1. Typical Application Block Diagram

8.3 Design Requirements

8.3.1 Power Considerations

Ensure the desired supply voltage is within the range specified in the *Recommended Operating Conditions*. The supply voltage sets the device's electrical characteristics as described in the *Electrical Characteristics* section.

The positive voltage supply must be capable of sourcing current equal to the total current to be sourced by all outputs of the SN74AHC138-Q1 plus the maximum static supply current, I_{CC}, listed in the *Electrical Characteristics*, and any transient current required for switching. The logic device can only source as much

current that is provided by the positive supply source. Ensure the maximum total current through V_{CC} listed in the *Absolute Maximum Ratings* is not exceeded.

The ground must be capable of sinking current equal to the total current to be sunk by all outputs of the SN74AHC138-Q1 plus the maximum supply current, I_{CC}, listed in the *Electrical Characteristics*, and any transient current required for switching. The logic device can only sink as much current that can be sunk into its ground connection. Ensure the maximum total current through GND listed in the *Absolute Maximum Ratings* is not exceeded.

The SN74AHC138-Q1 can drive a load with a total capacitance less than or equal to 50pF while still meeting all of the data sheet specifications. Larger capacitive loads can be applied; however, it is not recommended to exceed 50pF.

The SN74AHC138-Q1 can drive a load with total resistance described by $R_L \geq V_O / I_O$, with the output voltage and current defined in the *Electrical Characteristics* table with V_{OH} and V_{OL}. When outputting in the HIGH state, the output voltage in the equation is defined as the difference between the measured output voltage and the supply voltage at the V_{CC} pin.

Total power consumption can be calculated using the information provided in *CMOS Power Consumption and Cpd Calculation*.

Thermal increase can be calculated using the information provided in *Thermal Characteristics of Standard Linear and Logic (SLL) Packages and Devices*.

CAUTION

The maximum junction temperature, $T_{J(max)}$ listed in the *Absolute Maximum Ratings*, is an additional limitation to prevent damage to the device. Do not violate any values listed in the *Absolute Maximum Ratings*. These limits are provided to prevent damage to the device.

8.3.2 Input Considerations

Input signals must cross $V_{IL(max)}$ to be considered a logic LOW, and $V_{IH(min)}$ to be considered a logic HIGH. Do not exceed the maximum input voltage range found in the *Absolute Maximum Ratings*.

Unused inputs must be terminated to either V_{CC} or ground. The unused inputs can be directly terminated if the input is completely unused, or they can be connected with a pull-up or pull-down resistor if the input will be used sometimes, but not always. A pull-up resistor is used for a default state of HIGH, and a pull-down resistor is used for a default state of LOW. The drive current of the controller, leakage current into the SN74AHC138-Q1 (as specified in the *Electrical Characteristics*), and the desired input transition rate limits the resistor size. A 10kΩ resistor value is often used due to these factors.

The SN74AHC138-Q1 has CMOS inputs and thus requires fast input transitions to operate correctly, as defined in the *Recommended Operating Conditions* table. Slow input transitions can cause oscillations, additional power consumption, and reduction in device reliability.

Refer to the *Feature Description* section for additional information regarding the inputs for this device.

8.3.3 Output Considerations

The positive supply voltage is used to produce the output HIGH voltage. Drawing current from the output will decrease the output voltage as specified by the V_{OH} specification in the *Electrical Characteristics*. The ground voltage is used to produce the output LOW voltage. Sinking current into the output will increase the output voltage as specified by the V_{OL} specification in the *Electrical Characteristics*.

Push-pull outputs that could be in opposite states, even for a very short time period, should never be connected directly together. This can cause excessive current and damage to the device.

Two channels within the same device with the same input signals can be connected in parallel for additional output drive strength.

Unused outputs can be left floating. Do not connect outputs directly to V_{CC} or ground.

Copyright © 2024 Texas Instruments Incorporated

Refer to the *Feature Description* section for additional information regarding the outputs for this device.

8.4 Detailed Design Procedure

1. Add a decoupling capacitor from V_{CC} to GND. The capacitor needs to be placed physically close to the device and electrically close to both the V_{CC} and GND pins. An example layout is shown in the *Layout* section.
2. Ensure the capacitive load at the output is ≤ 50pF. This is not a hard limit; by design, however, it will optimize performance. This can be accomplished by providing short, appropriately sized traces from the SN74AHC138-Q1 to one or more of the receiving devices.
3. Ensure the resistive load at the output is larger than (V_{CC} / $I_{O(max)}$)Ω. Doing this will prevent the maximum output current from the *Absolute Maximum Ratings* from being violated. Most CMOS inputs have a resistive load measured in MΩ; much larger than the minimum calculated previously.
4. Thermal issues are rarely a concern for logic gates; the power consumption and thermal increase, however, can be calculated using the steps provided in the application report, *CMOS Power Consumption and Cpd Calculation*.

8.5 Application Curve

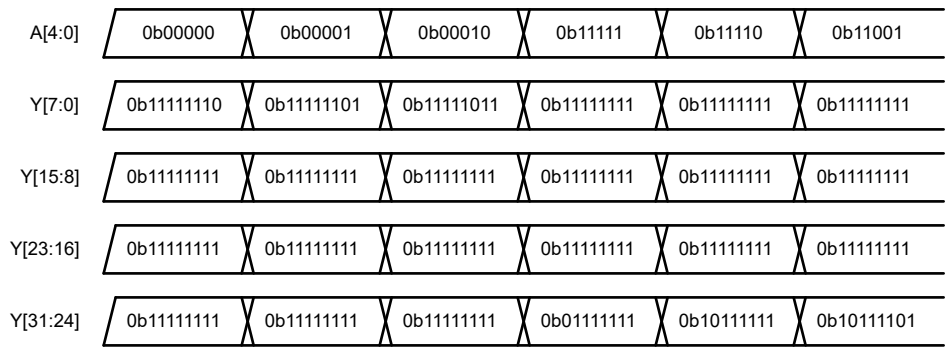

Figure 8-2. Application Timing Diagram

8.6 Power Supply Recommendations

The power supply can be any voltage between the minimum and maximum supply voltage rating located in the *Recommended Operating Conditions*. Each V_{CC} terminal should have a good bypass capacitor to prevent power disturbance. A 0.1µF capacitor is recommended for this device. It is acceptable to parallel multiple bypass capacitors to reject different frequencies of noise. The 0.1µF and 1µF capacitors are commonly used in parallel. The bypass capacitor should be installed as close to the power terminal as possible for best results.

Copyright © 2024 Texas Instruments Incorporated

8.7 Layout

8.7.1 Layout Guidelines

When using multiple-input and multiple-channel logic devices, inputs must never be left floating. In many cases, functions or parts of functions of digital logic devices are unused; for example, when only two inputs of a triple-input AND gate are used or only 3 of the 4 buffer gates are used. Such unused input pins must not be left unconnected because the undefined voltages at the outside connections result in undefined operational states. All unused inputs of digital logic devices must be connected to a logic high or logic low voltage, as defined by the input voltage specifications, to prevent them from floating. The logic level that must be applied to any particular unused input depends on the function of the device. Generally, the inputs are tied to GND or V_{CC}, whichever makes more sense for the logic function or is more convenient.

Copyright © 2024 Texas Instruments Incorporated

8.7.2 Layout Example

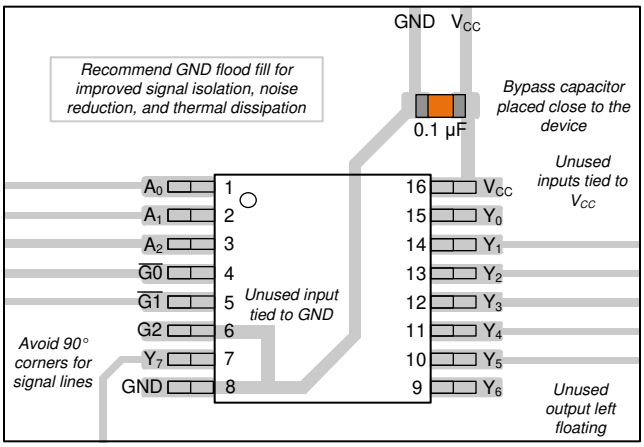

Figure 8-3. Example Layout for the SN74AHC138-Q1

9 Device and Documentation Support

TI offers an extensive line of development tools. Tools and software to evaluate the performance of the device, generate code, and develop solutions are listed below.

9.1 Receiving Notification of Documentation Updates

To receive notification of documentation updates, navigate to the device product folder on ti.com. Click on *Notifications* to register and receive a weekly digest of any product information that has changed. For change details, review the revision history included in any revised document.

9.2 Support Resources

TI E2E™ support forums are an engineer's go-to source for fast, verified answers and design help — straight from the experts. Search existing answers or ask your own question to get the quick design help you need.

Linked content is provided "AS IS" by the respective contributors. They do not constitute TI specifications and do not necessarily reflect TI's views; see TI's Terms of Use.

9.3 Trademarks

TI E2E™ is a trademark of Texas Instruments.
All trademarks are the property of their respective owners.

9.4 Electrostatic Discharge Caution

This integrated circuit can be damaged by ESD. Texas Instruments recommends that all integrated circuits be handled with appropriate precautions. Failure to observe proper handling and installation procedures can cause damage.

ESD damage can range from subtle performance degradation to complete device failure. Precision integrated circuits may be more susceptible to damage because very small parametric changes could cause the device not to meet its published specifications.

9.5 Glossary

TI Glossary This glossary lists and explains terms, acronyms, and definitions.

10 Revision History

DATE	REVISION	NOTES
March 2024	*	Initial Release

11 Mechanical, Packaging, and Orderable Information

The following pages include mechanical, packaging, and orderable information. This information is the most current data available for the designated devices. This data is subject to change without notice and revision of this document. For browser-based versions of this data sheet, refer to the left-hand navigation.

Copyright © 2024 Texas Instruments Incorporated

PACKAGING INFORMATION

Orderable part number	Status (1)	Material type (2)	Package | Pins	Package qty | Carrier	RoHS (3)	Lead finish/ Ball material (4)	MSL rating/ Peak reflow (5)	Op temp (°C)	Part marking (6)
SN74AHC138QPWRQ1	Active	Production	TSSOP (PW) | 16	3000 | LARGE T&R	Yes	NIPDAU	Level-1-260C-UNLIM	-40 to 125	AHC138Q
SN74AHC138QPWRQ1.A	Active	Production	TSSOP (PW) | 16	3000 | LARGE T&R	Yes	NIPDAU	Level-1-260C-UNLIM	-40 to 125	AHC138Q
SN74AHC138QWBQBRQ1	Active	Production	WQFN (BQB) | 16	3000 | LARGE T&R	Yes	NIPDAU	Level-1-260C-UNLIM	-40 to 125	AH138Q
SN74AHC138QWBQBRQ1.A	Active	Production	WQFN (BQB) | 16	3000 | LARGE T&R	Yes	NIPDAU	Level-1-260C-UNLIM	-40 to 125	AH138Q

(1) **Status:** For more details on status, see our product life cycle.

(2) **Material type:** When designated, preproduction parts are prototypes/experimental devices, and are not yet approved or released for full production. Testing and final process, including without limitation quality assurance, reliability performance testing, and/or process qualification, may not yet be complete, and this item is subject to further changes or possible discontinuation. If available for ordering, purchases will be subject to an additional waiver at checkout, and are intended for early internal evaluation purposes only. These items are sold without warranties of any kind.

(3) **RoHS values:** Yes, No, RoHS Exempt. See the TI RoHS Statement for additional information and value definition.

(4) **Lead finish/Ball material:** Parts may have multiple material finish options. Finish options are separated by a vertical ruled line. Lead finish/Ball material values may wrap to two lines if the finish value exceeds the maximum column width.

(5) **MSL rating/Peak reflow:** The moisture sensitivity level ratings and peak solder (reflow) temperatures. In the event that a part has multiple moisture sensitivity ratings, only the lowest level per JEDEC standards is shown. Refer to the shipping label for the actual reflow temperature that will be used to mount the part to the printed circuit board.

(6) **Part marking:** There may be an additional marking, which relates to the logo, the lot trace code information, or the environmental category of the part.

Multiple part markings will be inside parentheses. Only one part marking contained in parentheses and separated by a "~" will appear on a part. If a line is indented then it is a continuation of the previous line and the two combined represent the entire part marking for that device.

Important Information and Disclaimer: The information provided on this page represents TI's knowledge and belief as of the date that it is provided. TI bases its knowledge and belief on information provided by third parties, and makes no representation or warranty as to the accuracy of such information. Efforts are underway to better integrate information from third parties. TI has taken and continues to take reasonable steps to provide representative and accurate information but may not have conducted destructive testing or chemical analysis on incoming materials and chemicals. TI and TI suppliers consider certain information to be proprietary, and thus CAS numbers and other limited information may not be available for release.

In no event shall TI's liability arising out of such information exceed the total purchase price of the TI part(s) at issue in this document sold by TI to Customer on an annual basis.

OTHER QUALIFIED VERSIONS OF SN74AHC138-Q1 :

- Catalog : SN74AHC138
- Military : SN54AHC138

NOTE: Qualified Version Definitions:

- Catalog - TI's standard catalog product
- Military - QML certified for Military and Defense Applications

TAPE AND REEL INFORMATION

REEL DIMENSIONS

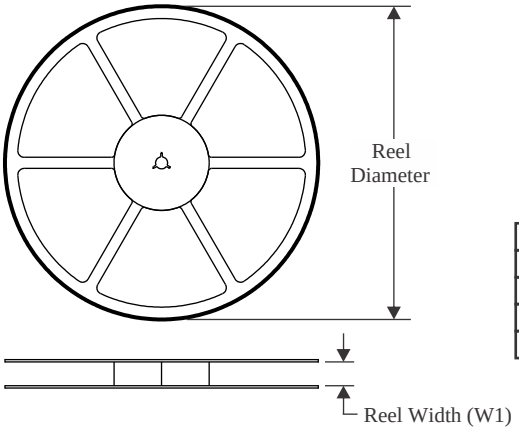

TAPE DIMENSIONS

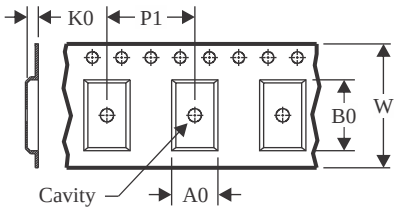

A0	Dimension designed to accommodate the component width
B0	Dimension designed to accommodate the component length
K0	Dimension designed to accommodate the component thickness
W	Overall width of the carrier tape
P1	Pitch between successive cavity centers

QUADRANT ASSIGNMENTS FOR PIN 1 ORIENTATION IN TAPE

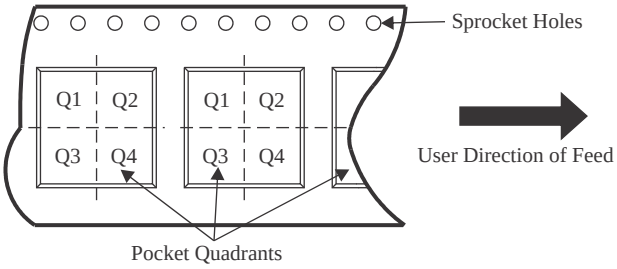

*All dimensions are nominal

Device	Package Type	Package Drawing	Pins	SPQ	Reel Diameter (mm)	Reel Width W1 (mm)	A0 (mm)	B0 (mm)	K0 (mm)	P1 (mm)	W (mm)	Pin1 Quadrant
SN74AHC138QPWRQ1	TSSOP	PW	16	3000	330.0	12.4	6.9	5.6	1.6	8.0	12.0	Q1
SN74AHC138QWBQBRQ1	WQFN	BQB	16	3000	180.0	12.4	2.8	3.8	1.2	4.0	12.0	Q1

TAPE AND REEL BOX DIMENSIONS

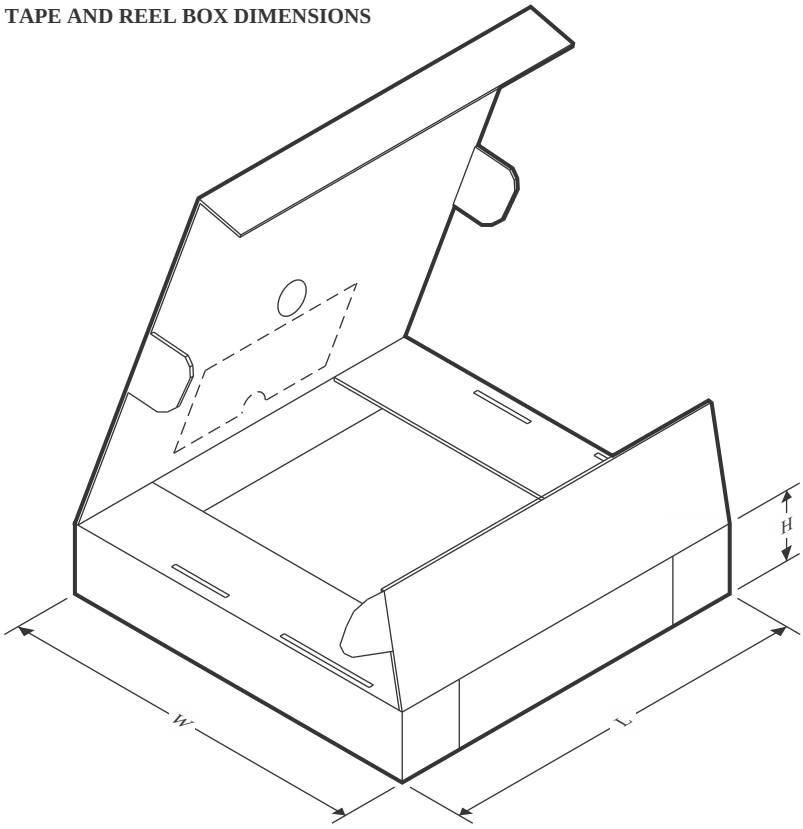

*All dimensions are nominal

Device	Package Type	Package Drawing	Pins	SPQ	Length (mm)	Width (mm)	Height (mm)
SN74AHC138QPWRQ1	TSSOP	PW	16	3000	353.0	353.0	32.0
SN74AHC138QWBQBRQ1	WQFN	BQB	16	3000	210.0	185.0	35.0

PW0016A

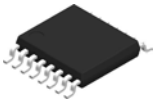

PACKAGE OUTLINE

TSSOP - 1.2 mm max height

SMALL OUTLINE PACKAGE

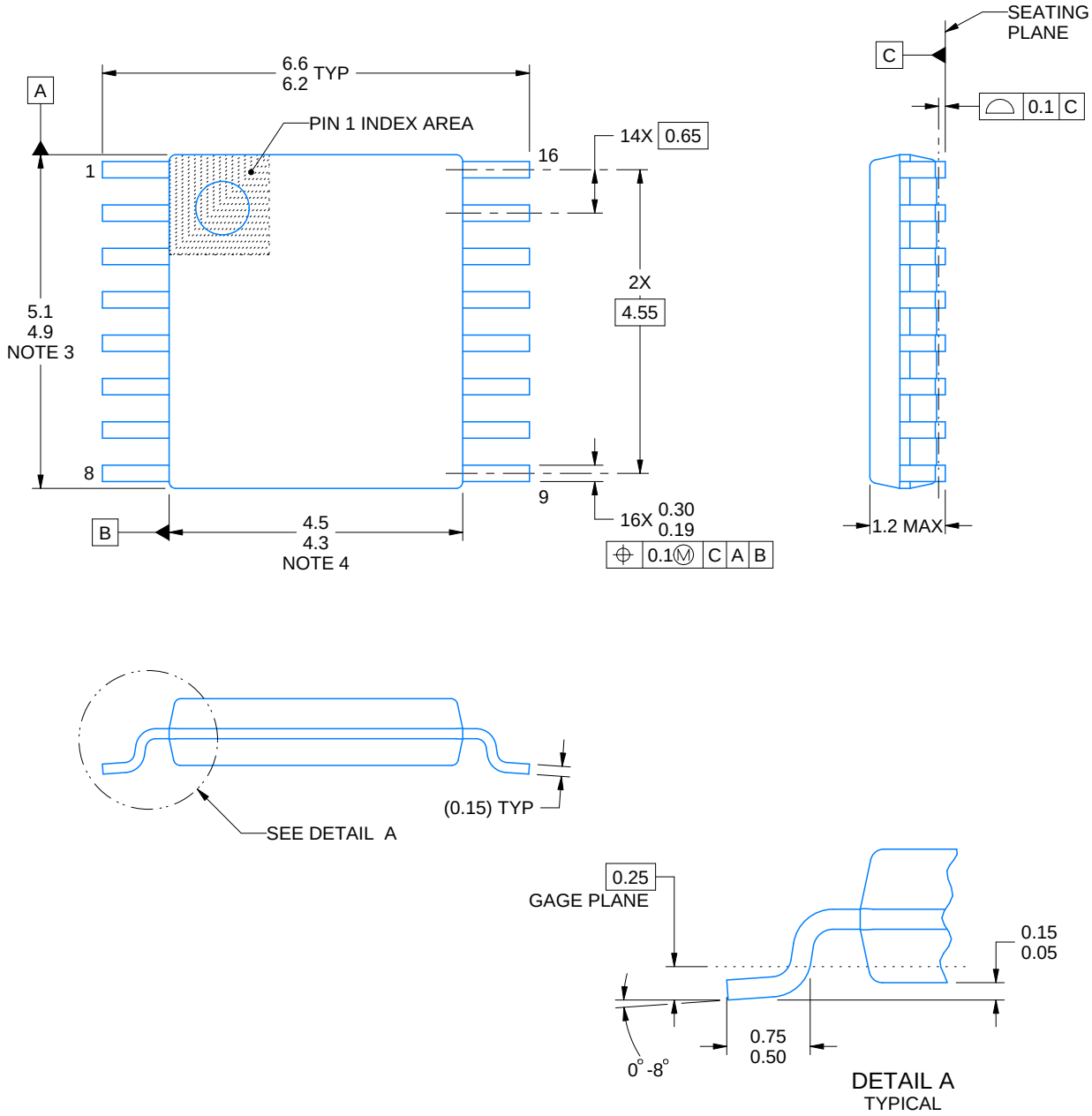

NOTES:

1. All linear dimensions are in millimeters. Any dimensions in parenthesis are for reference only. Dimensioning and tolerancing per ASME Y14.5M.
2. This drawing is subject to change without notice.
3. This dimension does not include mold flash, protrusions, or gate burrs. Mold flash, protrusions, or gate burrs shall not exceed 0.15 mm per side.
4. This dimension does not include interlead flash. Interlead flash shall not exceed 0.25 mm per side.
5. Reference JEDEC registration MO-153.

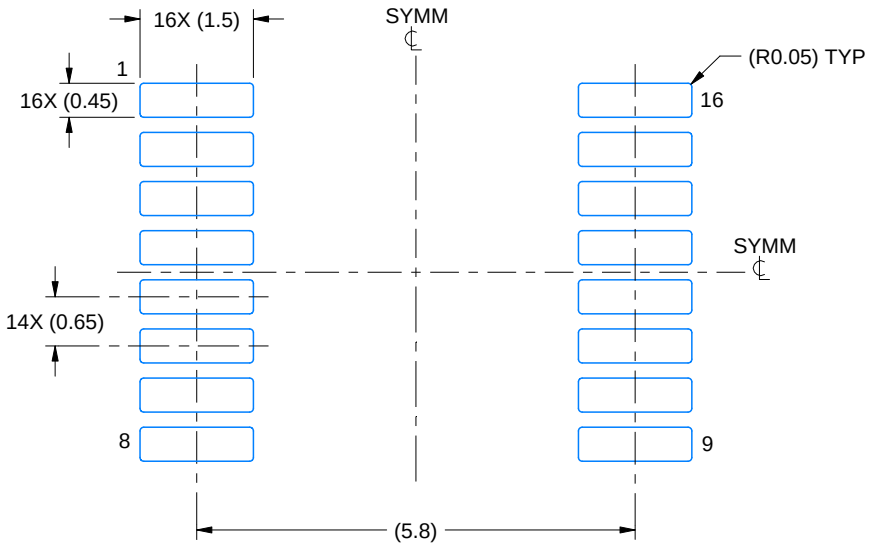

LAND PATTERN EXAMPLE
EXPOSED METAL SHOWN
SCALE: 10X

NON-SOLDER MASK DEFINED (PREFERRED)

SOLDER MASK DEFINED

SOLDER MASK DETAILS

4220204/A 02/2017

NOTES: (continued)

6. Publication IPC-7351 may have alternate designs.
7. Solder mask tolerances between and around signal pads can vary based on board fabrication site.

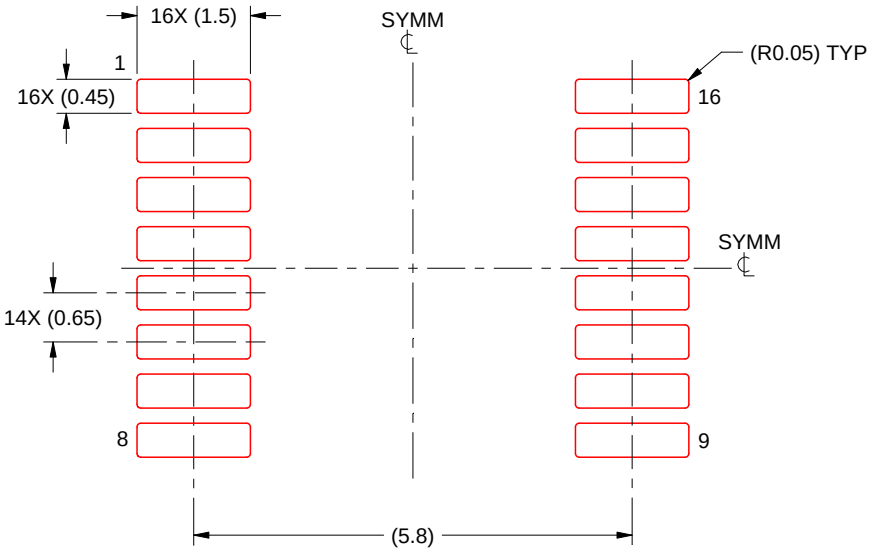

SOLDER PASTE EXAMPLE
BASED ON 0.125 mm THICK STENCIL
SCALE: 10X

4220204/A 02/2017

NOTES: (continued)

8. Laser cutting apertures with trapezoidal walls and rounded corners may offer better paste release. IPC-7525 may have alternate design recommendations.
9. Board assembly site may have different recommendations for stencil design.

GENERIC PACKAGE VIEW

BQB 16

WQFN - 0.8 mm max height

2.5 x 3.5, 0.5 mm pitch

PLASTIC QUAD FLATPACK - NO LEAD

This image is a representation of the package family, actual package may vary.
Refer to the product data sheet for package details.

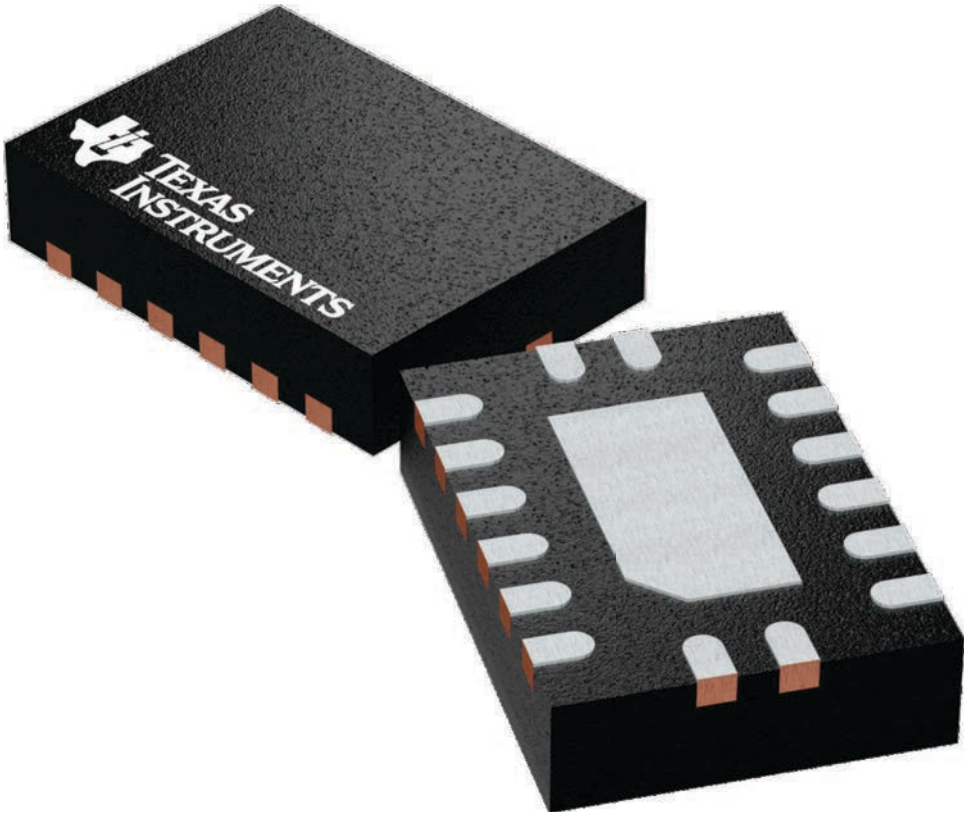

4226161/A

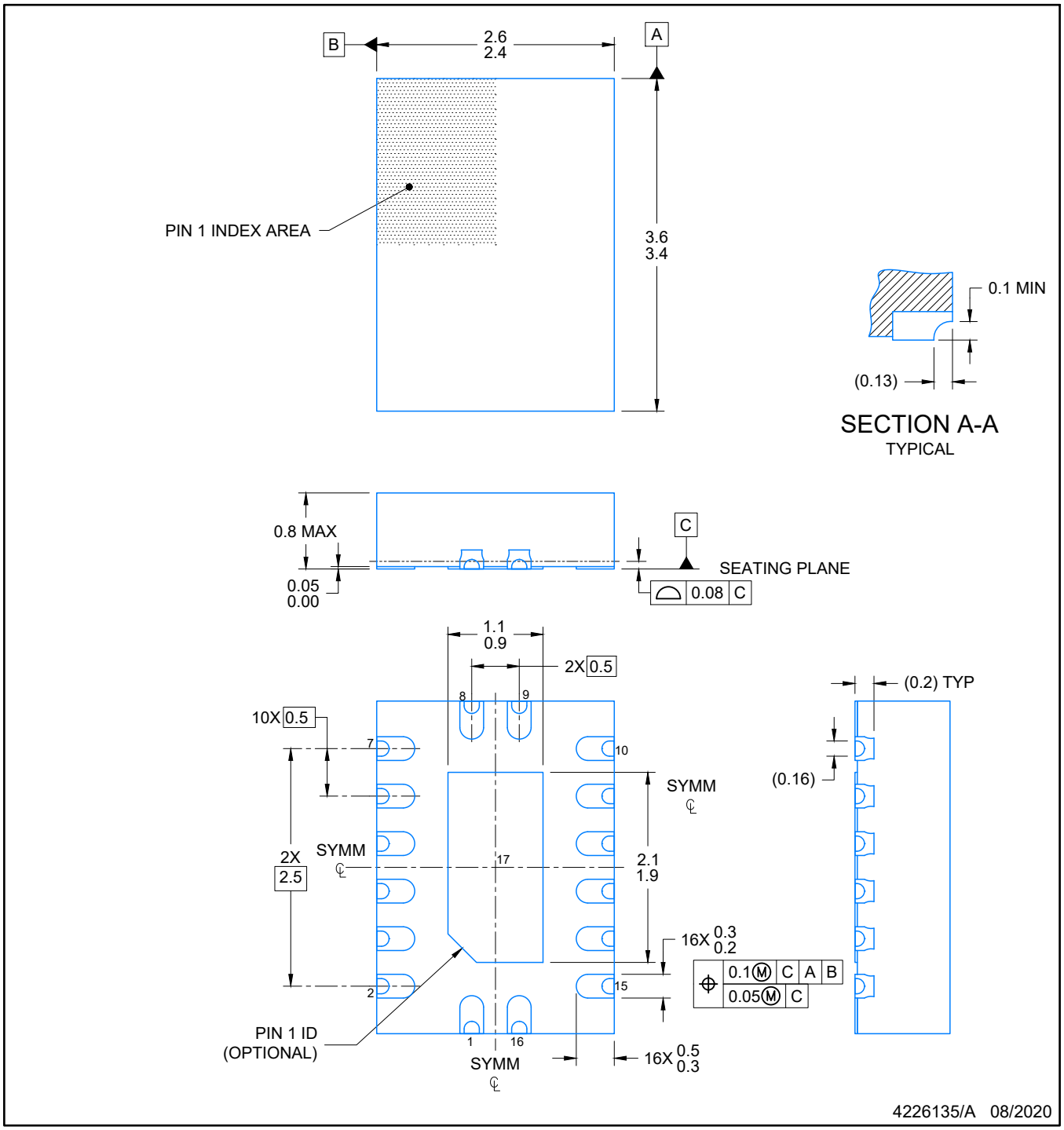

NOTES:

1. All linear dimensions are in millimeters. Any dimensions in parenthesis are for reference only. Dimensioning and tolerancing per ASME Y14.5M.
2. This drawing is subject to change without notice.
3. The package thermal pad must be soldered to the printed circuit board for optimal thermal and mechanical performance.

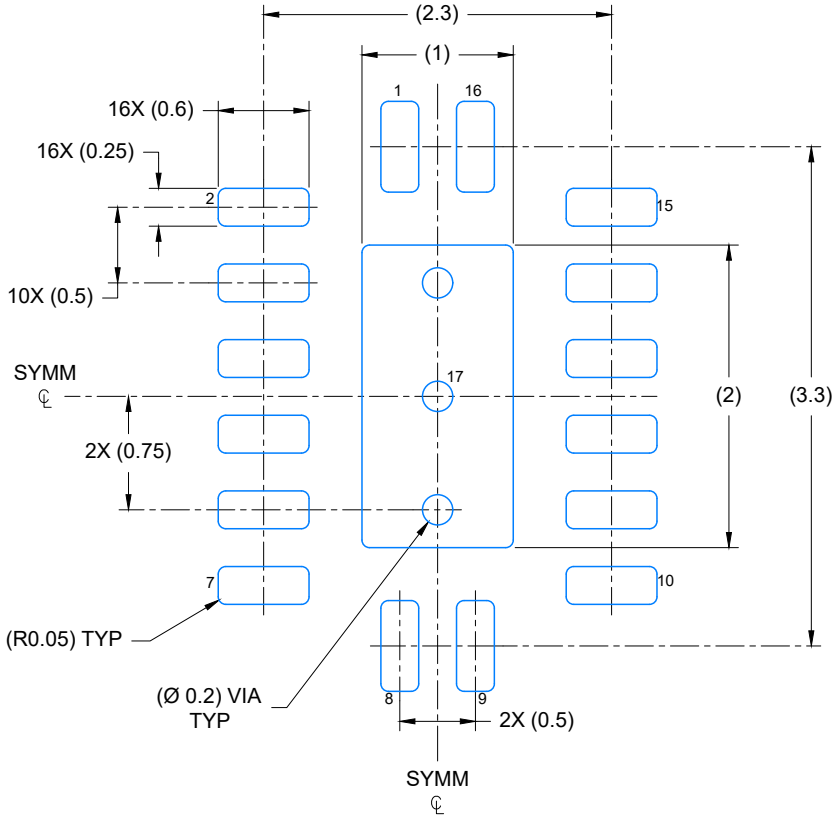

LAND PATTERN EXAMPLE
EXPOSED METAL SHOWN
SCALE: 20X

4226135/A 08/2020

NOTES: (continued)

4. This package is designed to be soldered to a thermal pad on the board. For more information, see Texas Instruments literature number SLUA271 (www.ti.com/lit/slua271).
5. Vias are optional depending on application, refer to device data sheet. If any vias are implemented, refer to their locations shown on this view. It is recommended that vias under paste be filled, plugged or tented.

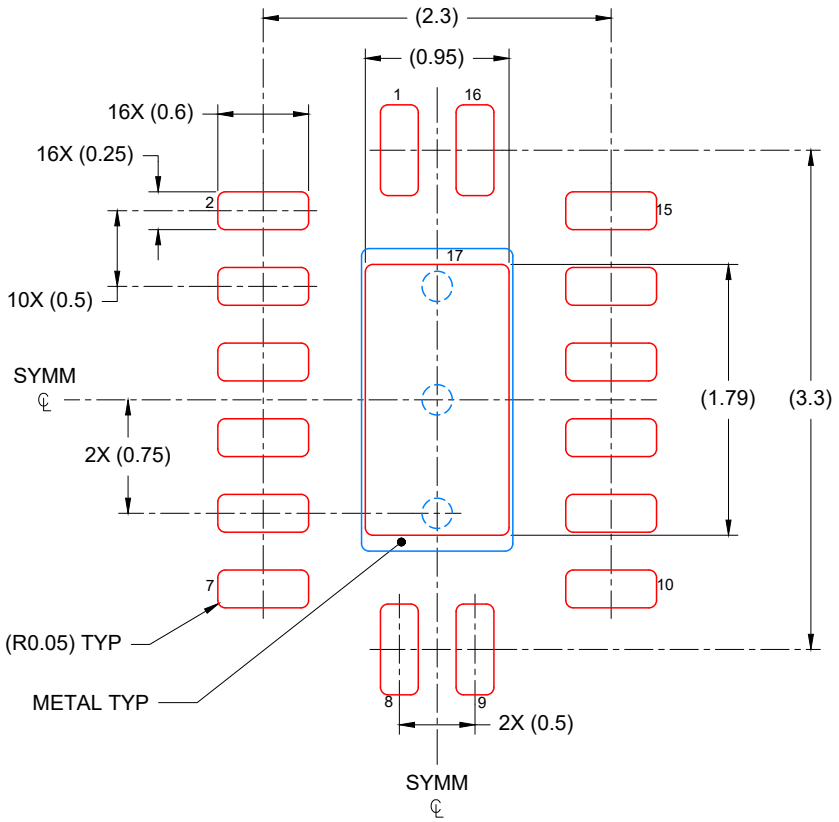

SOLDER PASTE EXAMPLE
BASED ON 0.125 mm THICK STENCIL

EXPOSED PAD
85% PRINTED COVERAGE BY AREA
SCALE: 20X

4226135/A 08/2020

NOTES: (continued)

6. Laser cutting apertures with trapezoidal walls and rounded corners may offer better paste release. IPC-7525 may have alternate design recommendations.

IMPORTANT NOTICE AND DISCLAIMER

TI PROVIDES TECHNICAL AND RELIABILITY DATA (INCLUDING DATA SHEETS), DESIGN RESOURCES (INCLUDING REFERENCE DESIGNS), APPLICATION OR OTHER DESIGN ADVICE, WEB TOOLS, SAFETY INFORMATION, AND OTHER RESOURCES “AS IS” AND WITH ALL FAULTS, AND DISCLAIMS ALL WARRANTIES, EXPRESS AND IMPLIED, INCLUDING WITHOUT LIMITATION ANY IMPLIED WARRANTIES OF MERCHANTABILITY, FITNESS FOR A PARTICULAR PURPOSE OR NON-INFRINGEMENT OF THIRD PARTY INTELLECTUAL PROPERTY RIGHTS.

These resources are intended for skilled developers designing with TI products. You are solely responsible for (1) selecting the appropriate TI products for your application, (2) designing, validating and testing your application, and (3) ensuring your application meets applicable standards, and any other safety, security, regulatory or other requirements.

These resources are subject to change without notice. TI grants you permission to use these resources only for development of an application that uses the TI products described in the resource. Other reproduction and display of these resources is prohibited. No license is granted to any other TI intellectual property right or to any third party intellectual property right. TI disclaims responsibility for, and you will fully indemnify TI and its representatives against, any claims, damages, costs, losses, and liabilities arising out of your use of these resources.

TI’s products are provided subject to TI’s Terms of Sale or other applicable terms available either on ti.com or provided in conjunction with such TI products. TI’s provision of these resources does not expand or otherwise alter TI’s applicable warranties or warranty disclaimers for TI products.

TI objects to and rejects any additional or different terms you may have proposed.

Mailing Address: Texas Instruments, Post Office Box 655303, Dallas, Texas 75265
Copyright © 2025, Texas Instruments Incorporated