SN74CB3T3125 Quadruple FET Bus Switch 2.5-V, 3.3-V Low-Voltage Bus Switch with 5-V-Tolerant Level Shifter

1 Features

- Output Voltage Translation Tracks V_{CC}
- Supports Mixed-Mode Signal Operation On All Data I/O Ports
  - 5-V Input Down to 3.3-V Output-Level Shift With 3.3-V V_{CC}
  - 5-V/3.3-V Input Down to 2.5-V Output-Level Shift With 2.5-V V_{CC}
- 5-V-Tolerant I/Os With Device Powered Up or Powered Down
- Bidirectional Data Flow, With Near-Zero Propagation Delay
- Low ON-State Resistance (r_{on}) Characteristics (r_{on} = 5 Ω Typical)
- Low Input/Output Capacitance Minimizes Loading ($C_{io(OFF)}$ = 4.5 pF Typical)
- Data and Control Inputs Provide Undershoot Clamp Diodes
- Low Power Consumption (I_{CC} = 20 μA Max)
- V_{CC} Operating Range From 2.3 V to 3.6 V
- Data I/Os Support 0- to 5-V Signaling Levels (0.8 V, 1.2 V, 1.5 V, 1.8 V, 2.5 V, 3.3 V, 5 V)
- Control Inputs Can Be Driven by TTL or 5-V/3.3-V CMOS Outputs
- I_{off} Supports Partial-Power-Down Mode Operation
- Latch-Up Performance Exceeds 250 mA Per JESD 17
- ESD Performance Tested Per JESD 22
  - 2000-V Human-Body Model (A114-B, Class II)
  - 1000-V Charged-Device Model (C101)

2 Applications

- Supports Digital Applications: Level Translation, USB Interface, Bus Isolation
- Ideal for Low-Power Portable Equipment

3 Description

The SN74CB3T3125 is a high-speed TTL-compatible FET bus switch with low ON-state resistance (r_{on}), allowing for minimal propagation delay. The device fully supports mixed-mode signal operation on all data I/O ports by providing voltage translation that tracks V_{CC}. The SN74CB3T3125 supports systems using 5-V TTL, 3.3-V LVTTL, and 2.5-V CMOS switching standards, as well as user-defined switching levels (see *Typical DC Voltage-Translation Characteristics*).

The SN74CB3T3125 is organized as four 1-bit bus switches with separate output-enable (1$\overline{OE}$, 2$\overline{OE}$, 3$\overline{OE}$, 4$\overline{OE}$) inputs. It can be used as four 1-bit bus switches or as one 4-bit bus switch. When $\overline{OE}$ is low, the associated 1-bit bus switch is ON, and the A port is connected to the B port, allowing bidirectional data flow between ports. When $\overline{OE}$ is high, the associated 1-bit bus switch is OFF, and the high-impedance state exists between the A and B ports.

This device is fully specified for partial-power-down applications using I_{off}. The I_{off} feature ensures that damaging current will not backflow through the device when it is powered down. The device has isolation during power off.

To ensure the high-impedance state during power up or power down, $\overline{OE}$ should be tied to V_{CC} through a pullup resistor; the minimum value of the resistor is determined by the current-sinking capability of the driver.

Device Information(1)

PART NUMBER	PACKAGE	BODY SIZE (NOM)
SN74CB3T3125	VQFN – RGY (14)	3.50 mm x 3.50 mm
	TSSOP – PW (14)	5.00 mm x 4.40 mm
	TVSOP – DGV (14)	3.60 mm x 4.40 mm

(1) For all available packages, see the orderable addendum at the end of the data sheet.

Typical DC Voltage-Translation Characteristics

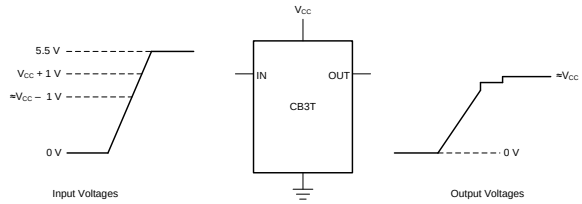

If the input high voltage (V_{IH}) level is greater than or equal to V_{CC} + 1 V, and less than or equal to 5.5 V, the output high voltage (V_{OH}) level will be equal to approximately the V_{CC} voltage level.

An IMPORTANT NOTICE at the end of this data sheet addresses availability, warranty, changes, use in safety-critical applications, intellectual property matters and other important disclaimers. PRODUCTION DATA.

Table of Contents

1 Features ... 1
2 Applications ... 1
3 Description ... 1
4 Revision History ... 2
5 Pin Configuration and Functions ... 3
6 Specifications ... 4
6.1 Absolute Maximum Ratings ... 4
6.2 ESD Ratings ... 4
6.3 Recommended Operating Conditions ... 4
6.4 Thermal Information ... 4
6.5 Electrical Characteristics ... 5
6.6 Switching Characteristics ... 5
6.7 Typical Characteristics ... 6
7 Parameter Measurement Information ... 7
8 Detailed Description ... 8
8.1 Overview ... 8
8.2 Functional Block Diagram ... 8
8.3 Feature Description ... 9
8.4 Device Functional Modes ... 9
9 Application and Implementation ... 10
9.1 Application Information ... 10
9.2 Typical Application ... 10
10 Power Supply Recommendations ... 11
11 Layout ... 12
11.1 Layout Guidelines ... 12
11.2 Layout Example ... 12
12 Device and Documentation Support ... 13
12.1 Device Support ... 13
12.2 Receiving Notification of Documentation Updates 13
12.3 Community Resources ... 13
12.4 Trademarks ... 13
12.5 Electrostatic Discharge Caution ... 13
12.6 Glossary ... 13
13 Mechanical, Packaging, and Orderable Information ... 13

4 Revision History

NOTE: Page numbers for previous revisions may differ from page numbers in the current version.

Changes from Revision B (August 2012) to Revision C	Page
• Added *Application* list, *Device Information* table, *ESD Ratings* table, *Feature Description* section, *Device Functional Modes*, *Application and Implementation* section, *Power Supply Recommendations* section, *Layout section, Device and Documentation Support* section, and *Mechanical, Packaging, and Orderable Information* section	1
• Removed Ordering Information table.	1
• Changed t_{en} V_{CC} = 3.3 V MAX value From: 4.4 ns To: 8 ns in the *Switching Characteristic*	5

Changes from Revision A (April 2009) to Revision B	Page
• Updated *Typical DC Voltage-Translation Characteristics*	1

Copyright © 2003–2018, Texas Instruments Incorporated

5 Pin Configuration and Functions

DGV OR PW PACKAGE
(TOP VIEW)

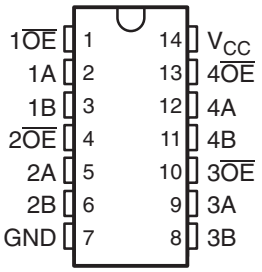

RGY PACKAGE
(TOP VIEW)

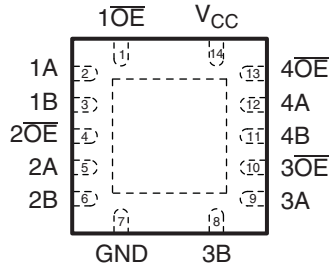

Pin Functions

PIN		I/O	DESCRIPTION
NAME	NO.		
$1\overline{OE}$	1	I	Active-low enable for switch 1
1A	2	I/O	Switch 1 A terminal
1B	3	I/O	Switch 1 B terminal
$2\overline{OE}$	4	I	Active-low enable for switch 2
2A	5	I/O	Switch 2 A terminal
2B	6	I/O	Switch 2 B terminal
GND	7	-	Ground
3A	8	I/O	Switch 3 A terminal
3B	9	I/O	Switch 3 B terminal
$3\overline{OE}$	10	I	Active-low enable for switch 3
4A	11	I/O	Switch 4 A terminal
4B	12	I/O	Switch 4 B terminal
$4\overline{OE}$	13	I	Active-low enable for switch 4
V_{CC}	14	-	Supply voltage pin

Copyright © 2003–2018, Texas Instruments Incorporated

6 Specifications

6.1 Absolute Maximum Ratings[1]

over operating free-air temperature range (unless otherwise noted)

			MIN	MAX	UNIT
V_{CC}	Supply voltage range[2]		–0.5	7	V
V_{IN}	Control input voltage range[2] [3]		–0.5	7	V
$V_{I/O}$	Switch I/O voltage range[2] [3] [4]		–0.5	7	V
I_{IK}	Control input clamp current	$V_{IN} < 0$		–50	mA
$I_{I/OK}$	I/O port clamp current	$V_{I/O} < 0$		–50	mA
$I_{I/O}$	ON-state switch current[5]			±128	mA
	Continuous current through V_{CC} or GND			±100	mA
T_{stg}	Storage temperature range		–65	150	°C

(1) Stresses beyond those listed under *Absolute Maximum Ratings* may cause permanent damage to the device. These are stress ratings only, which do not imply functional operation of the device at these or any other conditions beyond those indicated under *Recommended Operating Conditions*. Exposure to absolute-maximum-rated conditions for extended periods may affect device reliability.
(2) All voltages are with respect to ground unless otherwise specified.
(3) The input and output voltage ratings may be exceeded if the input and output clamp-current ratings are observed.
(4) V_I and V_O are used to denote specific conditions for $V_{I/O}$.
(5) I_I and I_O are used to denote specific conditions for $I_{I/O}$.

6.2 ESD Ratings

			VALUE	UNIT
$V_{(ESD)}$	Electrostatic discharge	Human-body model (HBM), per ANSI/ESDA/JEDEC JS-001[1]	±2000	V
		Charged-device model (CDM), per JEDEC specification JESD22-C101[2]	±1000	

(1) JEDEC document JEP155 states that 500-V HBM allows safe manufacturing with a standard ESD control process..
(2) JEDEC document JEP157 states that 250-V CDM allows safe manufacturing with a standard ESD control process.

6.3 Recommended Operating Conditions[1]

			MIN	MAX	UNIT
V_{CC}	Supply voltage		2.3	3.6	V
V_{IH}	High-level control input voltage	V_{CC} = 2.3 V to 2.7 V	1.7	5.5	V
		V_{CC} = 2.7 V to 3.6 V	2	5.5	
V_{IL}	Low-level control input voltage	V_{CC} = 2.3 V to 2.7 V	0	0.7	V
		V_{CC} = 2.7 V to 3.6 V	0	0.8	
$V_{I/O}$	Data input/output voltage		0	5.5	V
T_A	Operating free-air temperature		–40	85	°C

(1) All unused control inputs of the device must be held at V_{CC} or GND to ensure proper device operation. Refer to the TI application report, *Implications of Slow or Floating CMOS Inputs*, literature number SCBA004.

6.4 Thermal Information

THERMAL METRIC[1]		SN74CB3T3125			UNIT
		VQFN (RGY)	TSSOP (PW)	TVSOP (DGV)	
		14 PINS	14 PINS	14 PINS	
$R_{\theta JA}$	Junction-to-ambient thermal resistance	55.5	123.3	154.8	°C/W
$R_{\theta JC(top)}$	Junction-to-case (top) thermal resistance	56.9	53.0	64.4	°C/W
$R_{\theta JB}$	Junction-to-board thermal resistance	30.9	66.3	88.4	°C/W
ψ_{JT}	Junction-to-top characterization parameter	3.6	9.1	10.8	°C/W
ψ_{JB}	Junction-to-board characterization parameter	30.9	65.7	87.4	°C/W
$R_{\theta JC(bot)}$	Junction-to-case (bottom) thermal resistance	14.6	-	-	°C/W

(1) For more information about traditional and new thermal metrics, see the *Semiconductor and IC Package Thermal Metrics* application report.

Copyright © 2003–2018, Texas Instruments Incorporated

6.5 Electrical Characteristics[1]

over recommended operating free-air temperature range (unless otherwise noted)

PARAMETER		TEST CONDITIONS		MIN	TYP[2]	MAX	UNIT
V_{IK}		V_{CC} = 3 V, I_I = –18 mA				–1.2	V
V_{OH}		See Figure 3 through Figure 5					
I_{IN}	Control inputs	V_{CC} = 3.6 V, V_{IN} = 3.6 V to 5.5 V or GND				±10	µA
I_I		V_{CC} = 3.6 V, Switch ON, V_{IN} = V_{CC} or GND	V_I = V_{CC} – 0.7 V to 5.5 V			±20	µA
			V_I = 0.7 V to V_{CC} – 0.7 V			–40	
			V_I = 0 to 0.7 V			±5	
I_{OZ} [3]		V_{CC} = 3.6 V, V_O = 0 to 5.5 V, V_I = 0, Switch OFF, V_{IN} = V_{CC} or GND				±10	µA
I_{off}		V_{CC} = 0, V_O = 0 to 5.5 V, V_I = 0				10	µA
I_{CC}		V_{CC} = 3.6 V, $I_{I/O}$ = 0, Switch ON or OFF, V_{IN} = V_{CC} or GND	V_I = V_{CC} or GND			20	µA
			V_I = 5.5 V			20	
ΔI_{CC} [4]	Control inputs	V_{CC} = 3 V to 3.6 V, One input at V_{CC} – 0.6 V, Other inputs at V_{CC} or GND				300	µA
C_{in}	Control inputs	V_{CC} = 3.3 V, V_{IN} = V_{CC} or GND			3		pF
$C_{io(OFF)}$		V_{CC} = 3.3 V, $V_{I/O}$ = 5.5 V, 3.3 V, or GND, Switch OFF, V_{IN} = V_{CC} or GND			4.5		pF
$C_{io(ON)}$		V_{CC} = 3.3 V, Switch ON, V_{IN} = V_{CC} or GND	$V_{I/O}$ = 5.5 V or 3.3 V		4		pF
			$V_{I/O}$ = GND		10		
r_{on} [5]		V_{CC} = 2.3 V, TYP at V_{CC} = 2.5 V, V_I = 0	I_O = 24 mA		5	8	Ω
			I_O = 16 mA		5	8	
		V_{CC} = 3 V, V_I = 0	I_O = 64 mA		5	7	
			I_O = 32 mA		5	7	

(1) V_{IN} and I_{IN} refer to control inputs. V_I, V_O, I_I, and I_O refer to data pins.
(2) All typical values are at V_{CC} = 3.3 V (unless otherwise noted), T_A = 25°C.
(3) For I/O ports, the parameter I_{OZ} includes the input leakage current.
(4) This is the increase in supply current for each input that is at the specified TTL voltage level, rather than V_{CC} or GND.
(5) Measured by the voltage drop between A and B terminals at the indicated current through the switch. ON-state resistance is determined by the lower of the voltages of the two (A or B) terminals.

6.6 Switching Characteristics

over recommended operating free-air temperature range (unless otherwise noted) (see Figure 6)

PARAMETER	FROM (INPUT)	TO (OUTPUT)	V_{CC} = 2.5 V ± 0.2 V		V_{CC} = 3.3 V ± 0.3 V		UNIT
			MIN	MAX	MIN	MAX	
t_{pd} [1]	A or B	B or A		0.15		0.25	ns
t_{en}	$\overline{OE}$	A or B	1	8.5	1	8	ns
t_{dis}	$\overline{OE}$	A or B	1	9	1	9	ns

(1) The propagation delay is the calculated RC time constant of the typical ON-state resistance of the switch and the specified load capacitance, when driven by an ideal voltage source (zero output impedance).

Copyright © 2003–2018, Texas Instruments Incorporated

6.7 Typical Characteristics

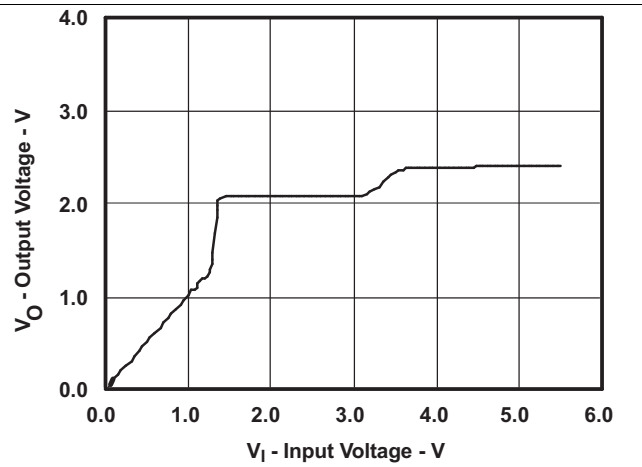

V_{CC} = 2.3 V I_O = 1 µA T_A = 25°C

Figure 1. Data Output Voltage vs Data Input Voltage

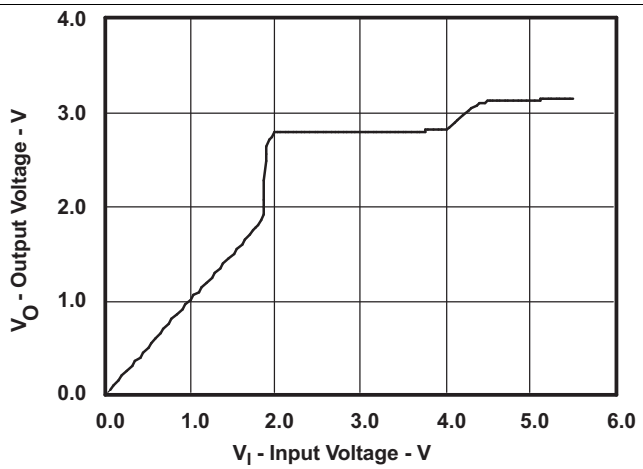

V_{CC} = 3 V I_O = 1 µA T_A = 25°C

Figure 2. Data Output Voltage vs Data Input Voltage

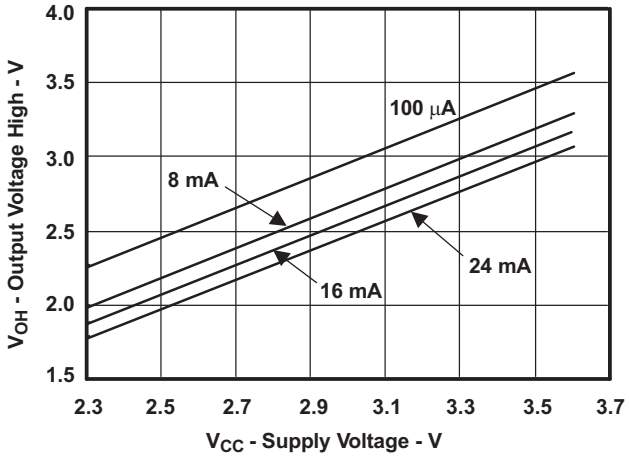

V_{CC} = 2.3 V to 3.6 V V_I = 5.5 V T_A = 85°C

Figure 3. Output Voltage High vs Supply Voltage

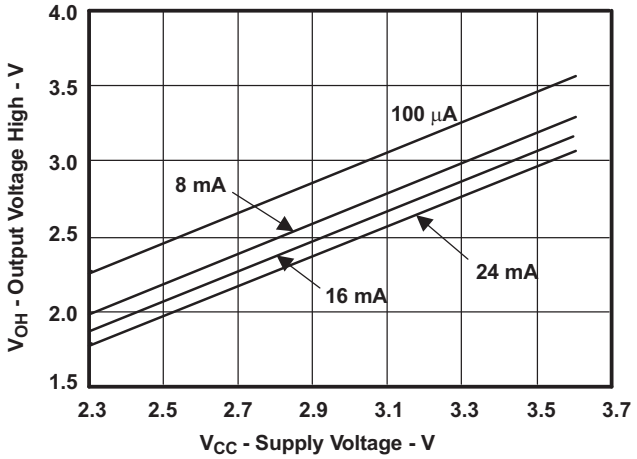

V_{CC} = 2.3 V to 3.6 V V_I = 5.5 V T_A = 25°C

Figure 4. Output Voltage High vs Supply Voltage

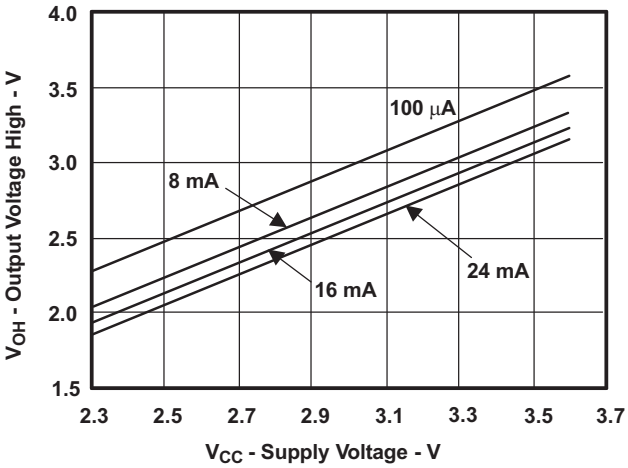

V_{CC} = 2.3 V to 3.6 V V_I = 5.5 V T_A = -40°C

Figure 5. Output Voltage High vs Supply Voltage

Copyright © 2003–2018, Texas Instruments Incorporated

7 Parameter Measurement Information

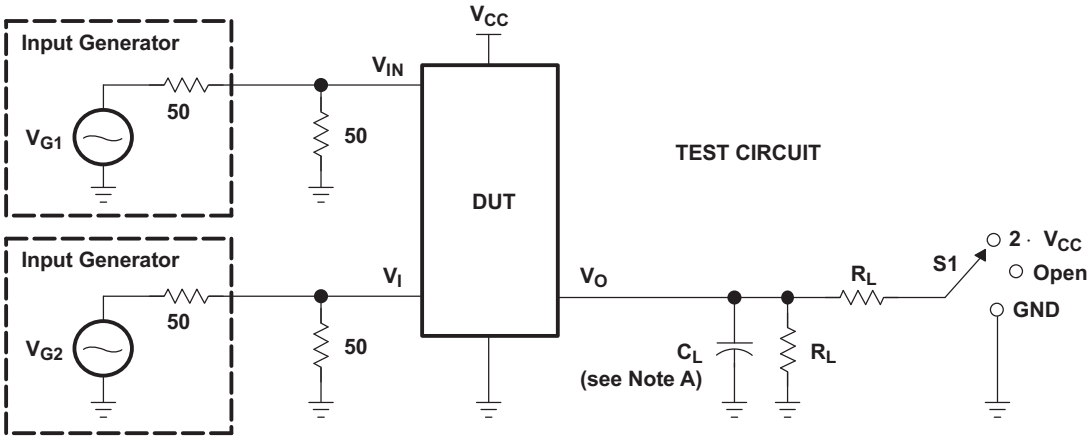

TEST	V_{CC}	S1	R_L	V_I	C_L	V
$t_{pd(s)}$	2.5 V ± 0.2 V 3.3 V ± 0.3 V	Open Open	500 500	3.6 V or GND 5.5 V or GND	30 pF 50 pF	
t_{PLZ}/t_{PZL}	2.5 V ± 0.2 V 3.3 V ± 0.3 V	2 · V_{CC} 2 · V_{CC}	500 500	GND GND	30 pF 50 pF	0.15 V 0.3 V
t_{PHZ}/t_{PZH}	2.5 V ± 0.2 V 3.3 V ± 0.3 V	Open Open	500 500	3.6 V 5.5 V	30 pF 50 pF	0.15 V 0.3 V

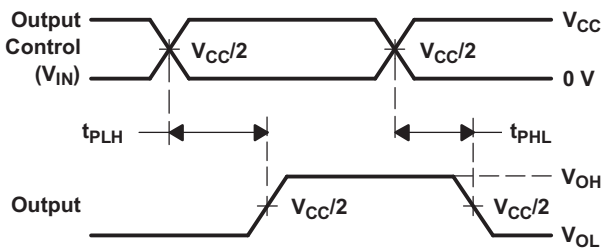

VOLTAGE WAVEFORMS
PROPAGATION DELAY TIMES ($t_{pd(s)}$)

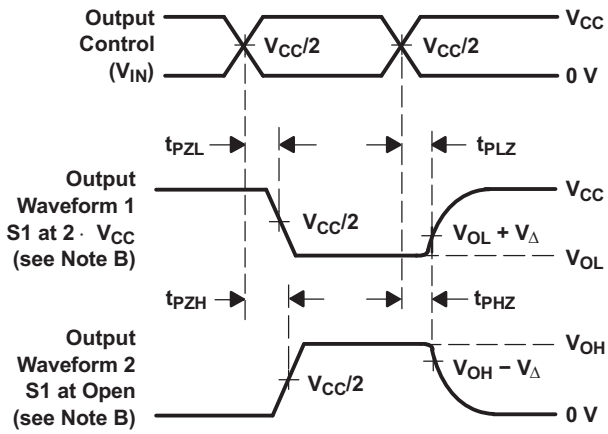

VOLTAGE WAVEFORMS
ENABLE AND DISABLE TIMES

NOTES:
A. C_L includes probe and jig capacitance.
B. Waveform 1 is for an output with internal conditions such that the output is low, except when disabled by the output control. Waveform 2 is for an output with internal conditions such that the output is high, except when disabled by the output control.
C. All input pulses are supplied by generators having the following characteristics: PRR 10 MHz, Z_O = 50 Ω, t_r 2.5 ns, t_f 2.5 ns.
D. The outputs are measured one at a time, with one transition per measurement.
E. t_{PLZ} and t_{PHZ} are the same as t_{dis}.
F. t_{PZL} and t_{PZH} are the same as t_{en}.
G. t_{PLH} and t_{PHL} are the same as $t_{pd(s)}$. The tpd propagation delay is the calculated RC time constant of the typical ON-state resistance of the switch and the specified load capacitance, when driven by an ideal voltage source (zero output impedance).
H. All parameters and waveforms are not applicable to all devices.

Figure 6. Test Circuit and Voltage Waveforms

8 Detailed Description

8.1 Overview

The SN74CB3T3215 device is organized as four 1-bit bus switches with separate ouput-enable (1OE, 2OE, 3OE, and 4 OE) inputs. When OE is low, the associated 1-bit bus switch is ON, and the A port is connected to the B port, allowing bidirectional data flow between ports. When OE is high, the associated 1-bit bus switch is OFF, and a high-impedance state exists between the A and B ports. This device is fully specified for partial-power-down applications using Ioff. The Ioff feature ensures that damaging current will not backflow through the device when it is powered down. The SN74CB3T3125 device has isolation during power off. To ensure the high-impedance state during power up or power down, OE should be tied to VCC through a pullup resistor; the minimum value of the resistor is determined by the current-sinking capability of the driver.

8.2 Functional Block Diagram

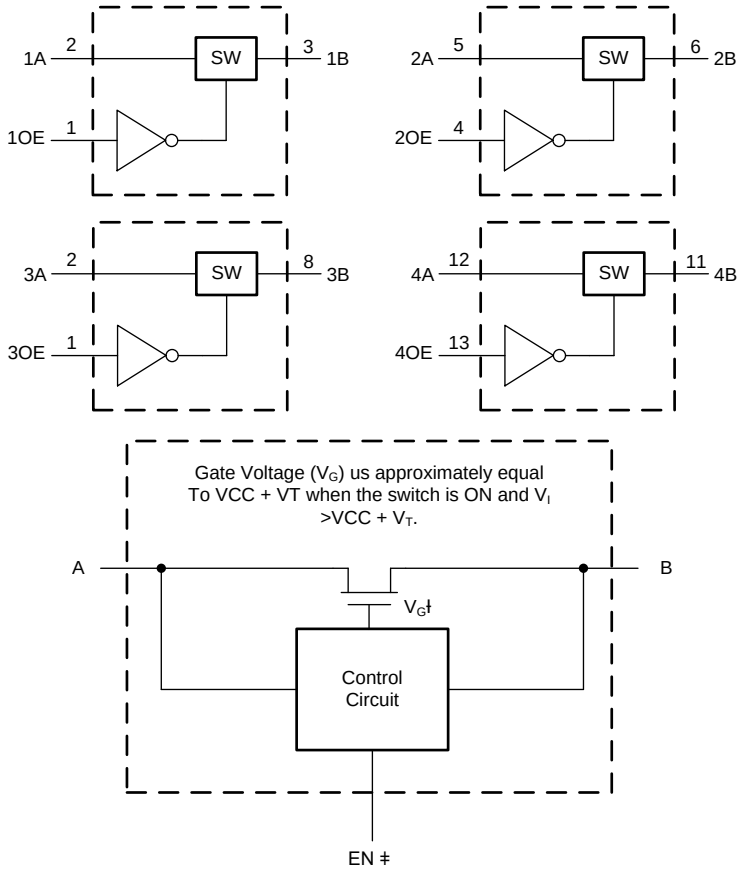

Figure 7. Simplified Schematic, Each FET Switch (SW)

Copyright © 2003–2018, Texas Instruments Incorporated

8.3 Feature Description

The SN74CB3T3125 is ideal for low-power portable equipment. Power consumption is low by design, I_{CC} = 20 μA, On-state resistance is low (r_{on} = 5 Ω) It has bidirectional data flow with near zero propagation delay. The devices minimizes loading due to the low input/output capacitance $C_{io(OFF)}$ = 4.5 pF Typical. Operating VCC range from 2.3 V to 3.6 V. The output tracks VCC. Data and control inputs provide undershoot clamp diodes. Control inputs can be driven by TTL or 5-V/3.3-V CMOS outputs. It supports mixed-mode signal operation on all data I/O ports. Data I/Os support 0- to 5-V signaling levels (0.8 V, 1.2 V, 1.5 V, 1.8 V, 2.5 V, 3.3 V, 5 V). The device is protected from damaging current, Ioff supports partial shutdown which prevents the current from flowing back through the device when it is powered down. In addition, it has 5-V tolerant I/Os with device powered up or powered down. The device is latch-up resistant with 250 mA exceeding the JESD 17 standard, providing protection from destruction due to latch-up. This device is protected against electrostatic discharge. It is tested per JESD 22 using 2000-V Human-Body Model (A114-B, Class II), and 1000-V Charged-Device Model (C101).

8.4 Device Functional Modes

Table 1 lists the functional modes for the SN74CB3T3125.

Table 1. Function Table (Each Bus Switch)

INPUT $\overline{OE}$	INPUT/OUTPUT A	FUNCTION
L	B	A port = B port
H	Z	Disconnect

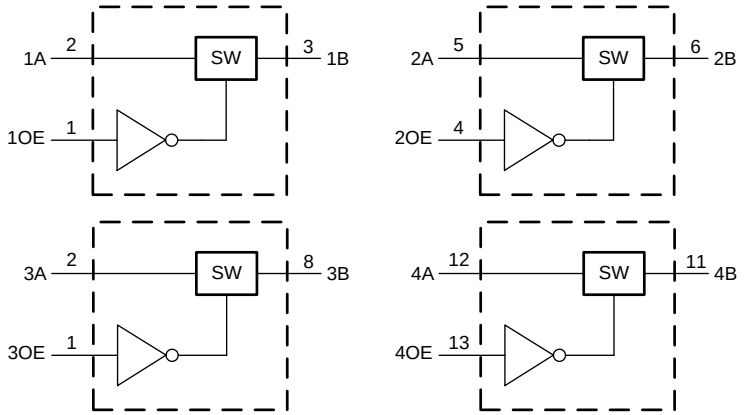

Figure 8. Logic Diagram (Positive Logic)

9 Application and Implementation

NOTE

Information in the following applications sections is not part of the TI component specification, and TI does not warrant its accuracy or completeness. TI's customers are responsible for determining suitability of components for their purposes. Customers should validate and test their design implementation to confirm system functionality.

9.1 Application Information

This application is specifically to connect a 5-V bus to a 3.3 V device. Ideally, set VCC to 3.3 V. It is assumed that communication in this particular application is one-directional, going from the bus controller to the device.

9.2 Typical Application

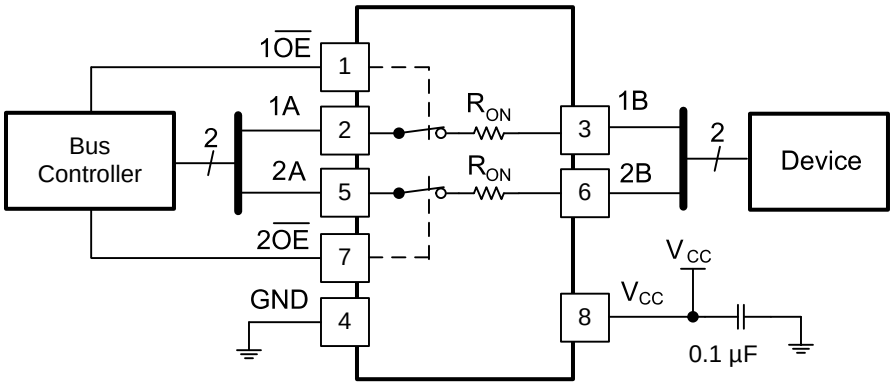

Figure 9. Application Circuit

9.2.1 Design Requirements

This device uses CMOS technology and has balanced output drive. Take care to avoid bus contention because it can drive currents that would exceed maximum limits. Because this design is for down-translating voltage, no pull-up resistors are required.

9.2.2 Detailed Design Procedure

1. Recommended Input conditions – Specified high and low levels. See (V_{IH} and V_{IL}) in *Recommended Operating Conditions* – Inputs are overvoltage tolerant allowing them to go as high as 7 V at any valid VCC.
2. Recommend output conditions – Load currents should not exceed 128 mA on each channel.

Copyright © 2003–2018, Texas Instruments Incorporated

Typical Application (continued)

9.2.3 Application Curves

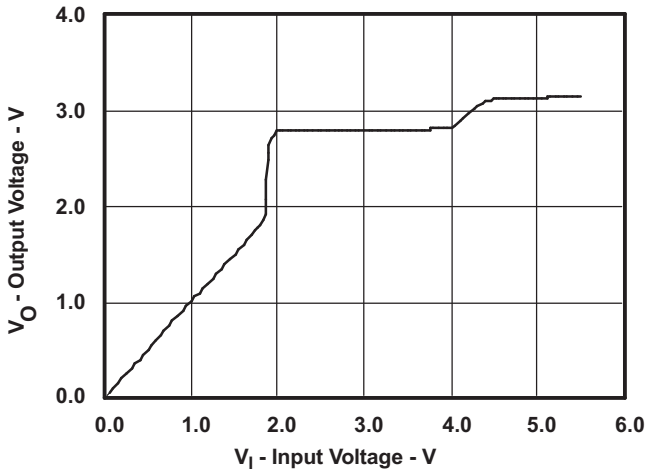

V_{CC} = 3 V I_O = 1 µA T_A = 25°C

Figure 10. Data Output Voltage vs Data Input Voltage

10 Power Supply Recommendations

The power supply can be any voltage between the minimum and maximum supply voltage rating located in the Recommended Operating Conditions.

Each VCC terminal should have a good bypass capacitor to prevent power disturbance. For devices with a single supply, a 0.1-µF bypass capacitor is recommended. If there are multiple pins labeled VCC, then a 0.01-µF or 0.022-µF capacitor is recommended for each VCC because the VCC pins will be tied together internally. For devices with dual supply pins operating at different voltages, for example VCC and VDD, a 0.1-µF bypass capacitor is recommended for each supply pin. It is acceptable to parallel multiple bypass capacitors to reject different frequencies of noise. 0.1-µF and 1-µF capacitors are commonly used in parallel. The bypass capacitor should be installed as close to the power terminal as possible for best results.

Copyright © 2003–2018, Texas Instruments Incorporated

11 Layout

11.1 Layout Guidelines

Reflections and matching are closely related to the loop antenna theory but are different enough to be discussed separately from the theory. When a PCB trace turns a corner at a 90° angle, a reflection can occur. A reflection occurs primarily because of the change of width of the trace. At the apex of the turn, the trace width increases to 1.414 times the width. This increase upsets the transmission-line characteristics, especially the distributed capacitance and self–inductance of the trace which results in the reflection. Not all PCB traces can be straight and therefore some traces must turn corners. Figure 11 shows progressively better techniques of rounding corners. Only the last example (BEST) maintains constant trace width and minimizes reflections.

11.2 Layout Example

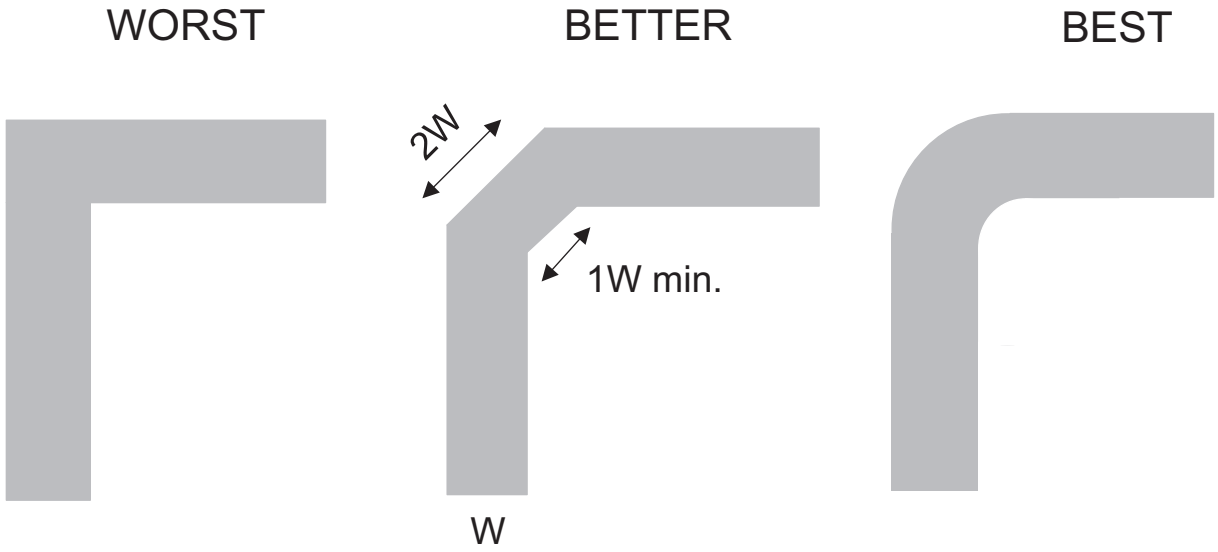

Figure 11. Example Layout

Copyright © 2003–2018, Texas Instruments Incorporated

12 Device and Documentation Support

12.1 Device Support

12.2 Receiving Notification of Documentation Updates

To receive notification of documentation updates, navigate to the device product folder on ti.com. In the upper right corner, click on *Alert me* to register and receive a weekly digest of any product information that has changed. For change details, review the revision history included in any revised document.

12.3 Community Resources

The following links connect to TI community resources. Linked contents are provided "AS IS" by the respective contributors. They do not constitute TI specifications and do not necessarily reflect TI's views; see TI's Terms of Use.

TI E2E™ Online Community ***TI's Engineer-to-Engineer (E2E) Community.*** Created to foster collaboration among engineers. At e2e.ti.com, you can ask questions, share knowledge, explore ideas and help solve problems with fellow engineers.

Design Support ***TI's Design Support*** Quickly find helpful E2E forums along with design support tools and contact information for technical support.

12.4 Trademarks

E2E is a trademark of Texas Instruments.
All other trademarks are the property of their respective owners.

12.5 Electrostatic Discharge Caution

This integrated circuit can be damaged by ESD. Texas Instruments recommends that all integrated circuits be handled with appropriate precautions. Failure to observe proper handling and installation procedures can cause damage.

ESD damage can range from subtle performance degradation to complete device failure. Precision integrated circuits may be more susceptible to damage because very small parametric changes could cause the device not to meet its published specifications.

12.6 Glossary

SLYZ022 — *TI Glossary*.

This glossary lists and explains terms, acronyms, and definitions.

13 Mechanical, Packaging, and Orderable Information

The following pages include mechanical, packaging, and orderable information. This information is the most current data available for the designated devices. This data is subject to change without notice and revision of this document. For browser-based versions of this data sheet, refer to the left-hand navigation.

PACKAGING INFORMATION

Orderable part number	Status (1)	Material type (2)	Package | Pins	Package qty | Carrier	RoHS (3)	Lead finish/ Ball material (4)	MSL rating/ Peak reflow (5)	Op temp (°C)	Part marking (6)
SN74CB3T3125DGVR	Active	Production	TVSOP (DGV) | 14	2000 | LARGE T&R	Yes	NIPDAU	Level-1-260C-UNLIM	-40 to 85	KS125
SN74CB3T3125DGVR.B	Active	Production	TVSOP (DGV) | 14	2000 | LARGE T&R	Yes	NIPDAU	Level-1-260C-UNLIM	-40 to 85	KS125
SN74CB3T3125DGVRG4	Active	Production	TVSOP (DGV) | 14	2000 | LARGE T&R	Yes	NIPDAU	Level-1-260C-UNLIM	-40 to 85	KS125
SN74CB3T3125DGVRG4.B	Active	Production	TVSOP (DGV) | 14	2000 | LARGE T&R	Yes	NIPDAU	Level-1-260C-UNLIM	-40 to 85	KS125
SN74CB3T3125PW	Obsolete	Production	TSSOP (PW) | 14	-	-	Call TI	Call TI	-40 to 85	KS125
SN74CB3T3125PWR	Active	Production	TSSOP (PW) | 14	2000 | LARGE T&R	Yes	NIPDAU	Level-1-260C-UNLIM	-40 to 85	KS125
SN74CB3T3125PWR.B	Active	Production	TSSOP (PW) | 14	2000 | LARGE T&R	Yes	NIPDAU	Level-1-260C-UNLIM	-40 to 85	KS125
SN74CB3T3125RGYR	Active	Production	VQFN (RGY) | 14	3000 | LARGE T&R	Yes	NIPDAU	Level-2-260C-1 YEAR	-40 to 85	KS125
SN74CB3T3125RGYR.B	Active	Production	VQFN (RGY) | 14	3000 | LARGE T&R	Yes	NIPDAU	Level-2-260C-1 YEAR	-40 to 85	KS125

(1) **Status:** For more details on status, see our product life cycle.

(2) **Material type:** When designated, preproduction parts are prototypes/experimental devices, and are not yet approved or released for full production. Testing and final process, including without limitation quality assurance, reliability performance testing, and/or process qualification, may not yet be complete, and this item is subject to further changes or possible discontinuation. If available for ordering, purchases will be subject to an additional waiver at checkout, and are intended for early internal evaluation purposes only. These items are sold without warranties of any kind.

(3) **RoHS values:** Yes, No, RoHS Exempt. See the TI RoHS Statement for additional information and value definition.

(4) **Lead finish/Ball material:** Parts may have multiple material finish options. Finish options are separated by a vertical ruled line. Lead finish/Ball material values may wrap to two lines if the finish value exceeds the maximum column width.

(5) **MSL rating/Peak reflow:** The moisture sensitivity level ratings and peak solder (reflow) temperatures. In the event that a part has multiple moisture sensitivity ratings, only the lowest level per JEDEC standards is shown. Refer to the shipping label for the actual reflow temperature that will be used to mount the part to the printed circuit board.

(6) **Part marking:** There may be an additional marking, which relates to the logo, the lot trace code information, or the environmental category of the part.

Multiple part markings will be inside parentheses. Only one part marking contained in parentheses and separated by a "~" will appear on a part. If a line is indented then it is a continuation of the previous line and the two combined represent the entire part marking for that device.

Important Information and Disclaimer: The information provided on this page represents TI's knowledge and belief as of the date that it is provided. TI bases its knowledge and belief on information provided by third parties, and makes no representation or warranty as to the accuracy of such information. Efforts are underway to better integrate information from third parties. TI has taken and continues to take reasonable steps to provide representative

and accurate information but may not have conducted destructive testing or chemical analysis on incoming materials and chemicals. TI and TI suppliers consider certain information to be proprietary, and thus CAS numbers and other limited information may not be available for release.

In no event shall TI's liability arising out of such information exceed the total purchase price of the TI part(s) at issue in this document sold by TI to Customer on an annual basis.

TAPE AND REEL INFORMATION

REEL DIMENSIONS

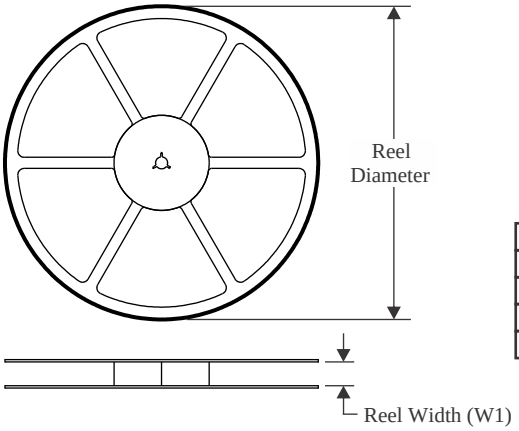

TAPE DIMENSIONS

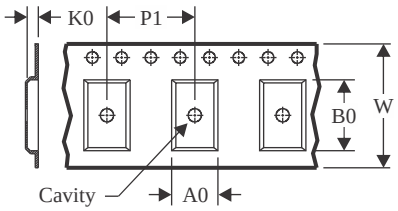

A0	Dimension designed to accommodate the component width
B0	Dimension designed to accommodate the component length
K0	Dimension designed to accommodate the component thickness
W	Overall width of the carrier tape
P1	Pitch between successive cavity centers

QUADRANT ASSIGNMENTS FOR PIN 1 ORIENTATION IN TAPE

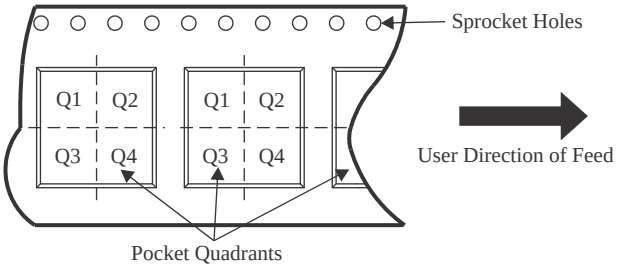

*All dimensions are nominal

Device	Package Type	Package Drawing	Pins	SPQ	Reel Diameter (mm)	Reel Width W1 (mm)	A0 (mm)	B0 (mm)	K0 (mm)	P1 (mm)	W (mm)	Pin1 Quadrant
SN74CB3T3125DGVR	TVSOP	DGV	14	2000	330.0	12.4	6.8	4.0	1.6	8.0	12.0	Q1
SN74CB3T3125DGVRG4	TVSOP	DGV	14	2000	330.0	12.4	6.8	4.0	1.6	8.0	12.0	Q1
SN74CB3T3125PWR	TSSOP	PW	14	2000	330.0	12.4	6.9	5.6	1.6	8.0	12.0	Q1
SN74CB3T3125RGYR	VQFN	RGY	14	3000	330.0	12.4	3.75	3.75	1.15	8.0	12.0	Q1

TAPE AND REEL BOX DIMENSIONS

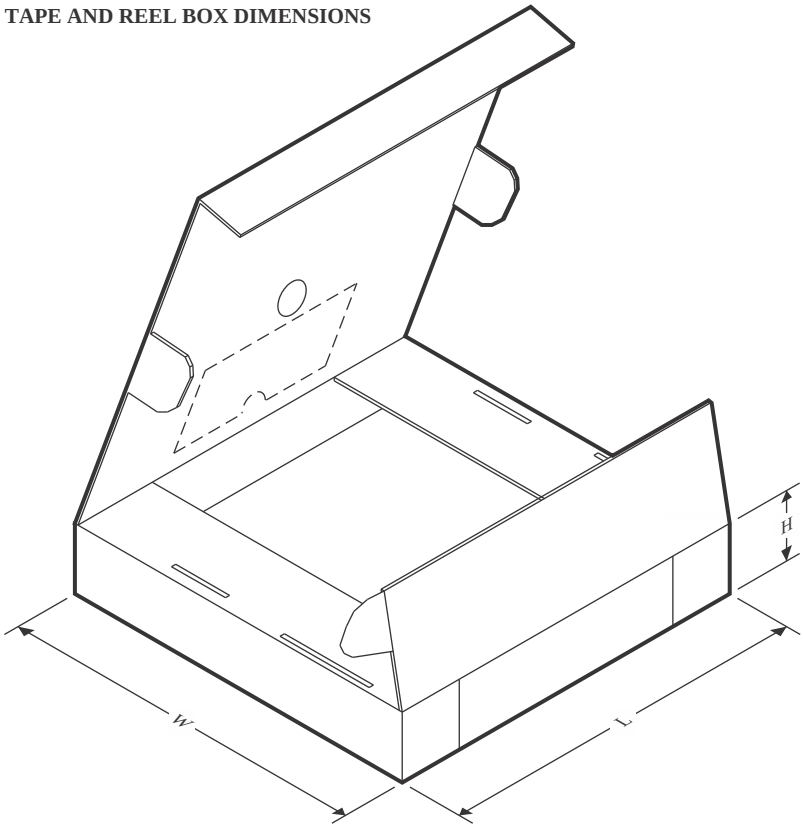

*All dimensions are nominal

Device	Package Type	Package Drawing	Pins	SPQ	Length (mm)	Width (mm)	Height (mm)
SN74CB3T3125DGVR	TVSOP	DGV	14	2000	367.0	367.0	35.0
SN74CB3T3125DGVRG4	TVSOP	DGV	14	2000	367.0	367.0	35.0
SN74CB3T3125PWR	TSSOP	PW	14	2000	367.0	367.0	35.0
SN74CB3T3125RGYR	VQFN	RGY	14	3000	367.0	367.0	35.0

DGV (R-PDSO-G)** **PLASTIC SMALL-OUTLINE**

24 PINS SHOWN

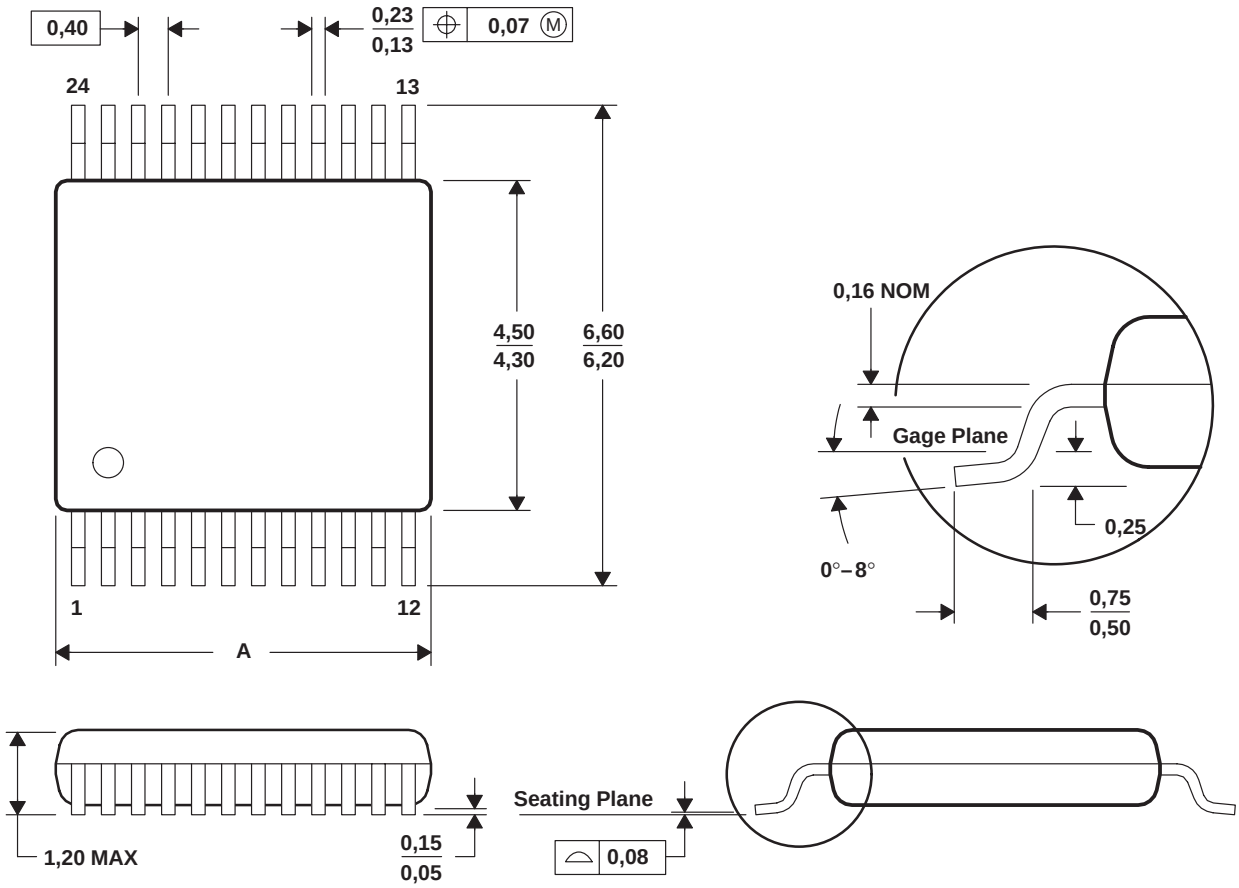

DIM \ PINS **	14	16	20	24	38	48	56
A MAX	3,70	3,70	5,10	5,10	7,90	9,80	11,40
A MIN	3,50	3,50	4,90	4,90	7,70	9,60	11,20

4073251/E 08/00

NOTES: A. All linear dimensions are in millimeters.
B. This drawing is subject to change without notice.
C. Body dimensions do not include mold flash or protrusion, not to exceed 0,15 per side.
D. Falls within JEDEC: 24/48 Pins – MO-153
14/16/20/56 Pins – MO-194

PW0014A

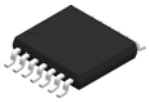

PACKAGE OUTLINE

TSSOP - 1.2 mm max height

SMALL OUTLINE PACKAGE

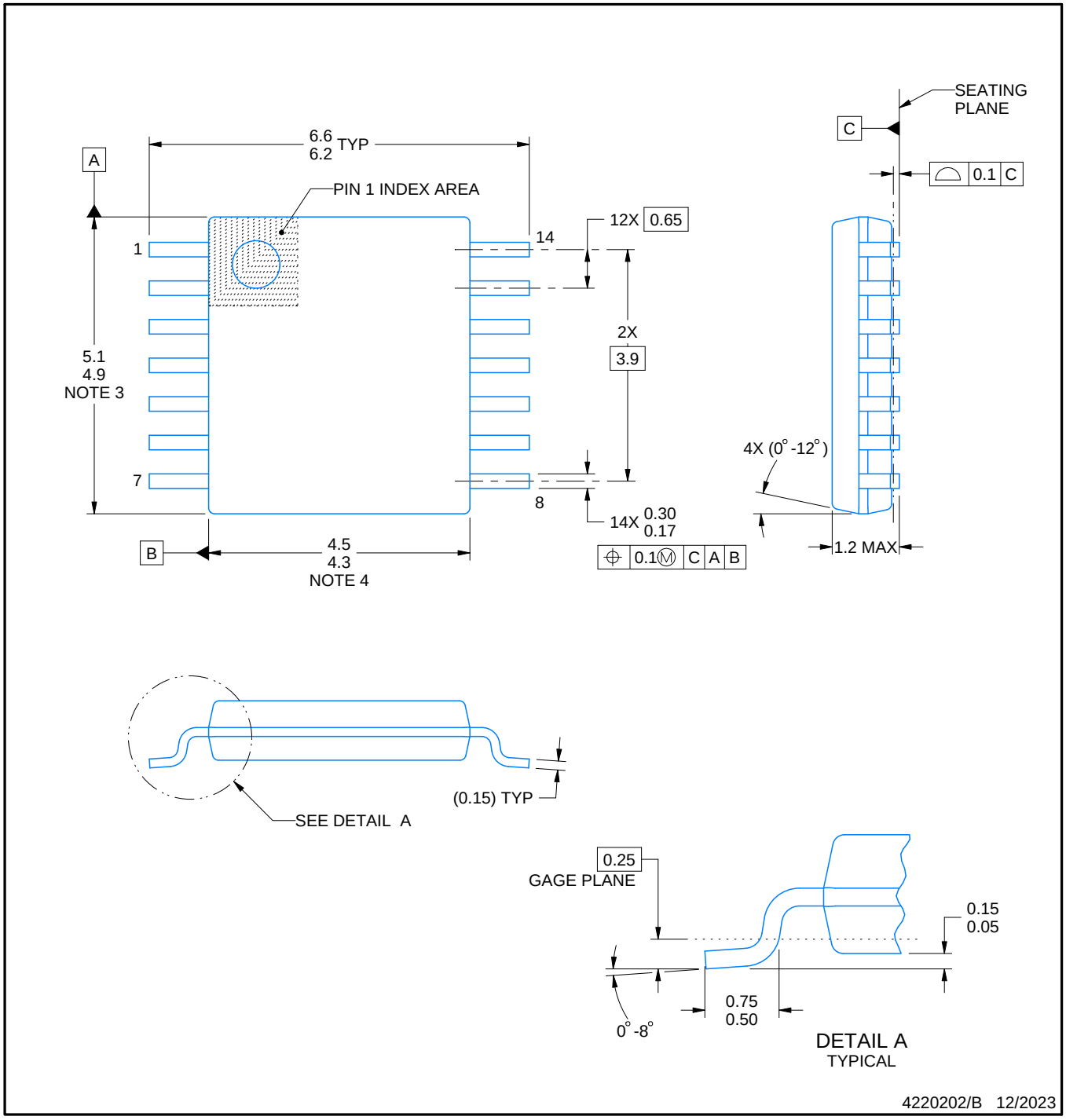

NOTES:

1. All linear dimensions are in millimeters. Any dimensions in parenthesis are for reference only. Dimensioning and tolerancing per ASME Y14.5M.
2. This drawing is subject to change without notice.
3. This dimension does not include mold flash, protrusions, or gate burrs. Mold flash, protrusions, or gate burrs shall not exceed 0.15 mm per side.
4. This dimension does not include interlead flash. Interlead flash shall not exceed 0.25 mm per side.
5. Reference JEDEC registration MO-153.

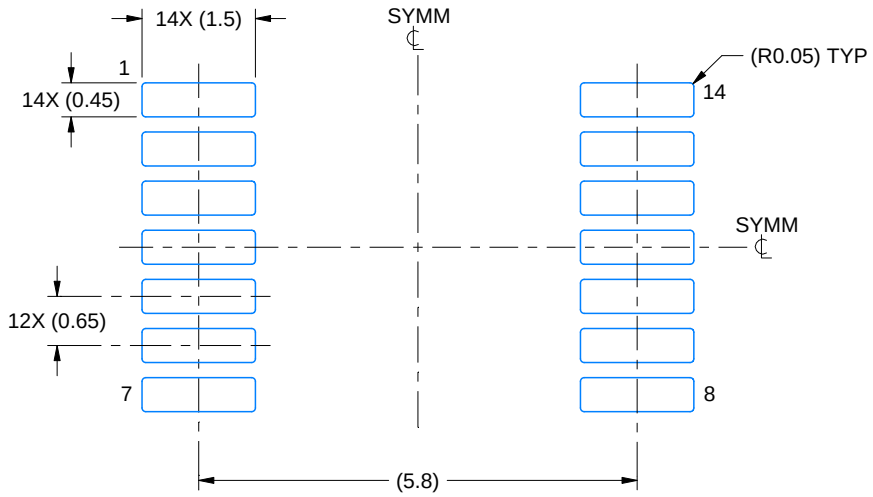

LAND PATTERN EXAMPLE
EXPOSED METAL SHOWN
SCALE: 10X

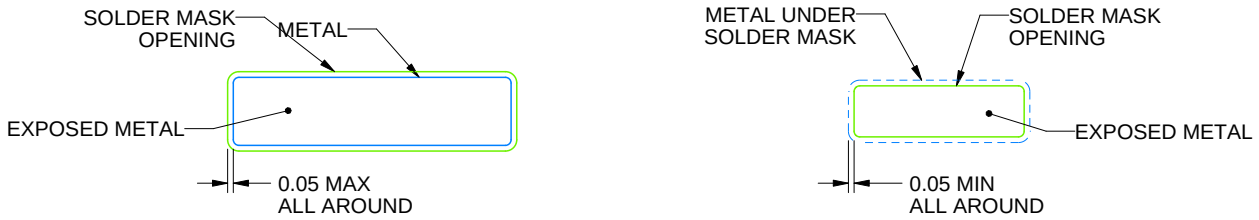

NON-SOLDER MASK DEFINED (PREFERRED)

SOLDER MASK DEFINED

SOLDER MASK DETAILS

4220202/B 12/2023

NOTES: (continued)

6. Publication IPC-7351 may have alternate designs.
7. Solder mask tolerances between and around signal pads can vary based on board fabrication site.

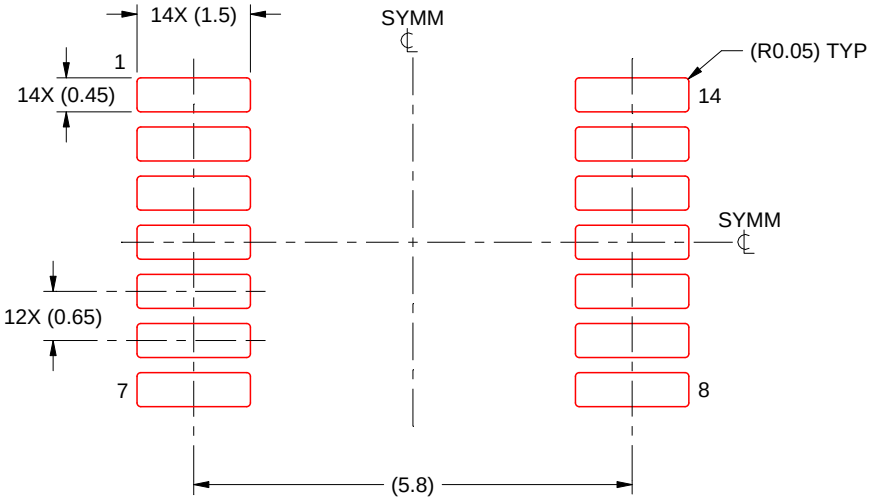

SOLDER PASTE EXAMPLE
BASED ON 0.125 mm THICK STENCIL
SCALE: 10X

4220202/B 12/2023

NOTES: (continued)

8. Laser cutting apertures with trapezoidal walls and rounded corners may offer better paste release. IPC-7525 may have alternate design recommendations.
9. Board assembly site may have different recommendations for stencil design.

GENERIC PACKAGE VIEW

RGY 14

VQFN - 1 mm max height

3.5 x 3.5, 0.5 mm pitch

PLASTIC QUAD FLATPACK - NO LEAD

This image is a representation of the package family, actual package may vary.
Refer to the product data sheet for package details.

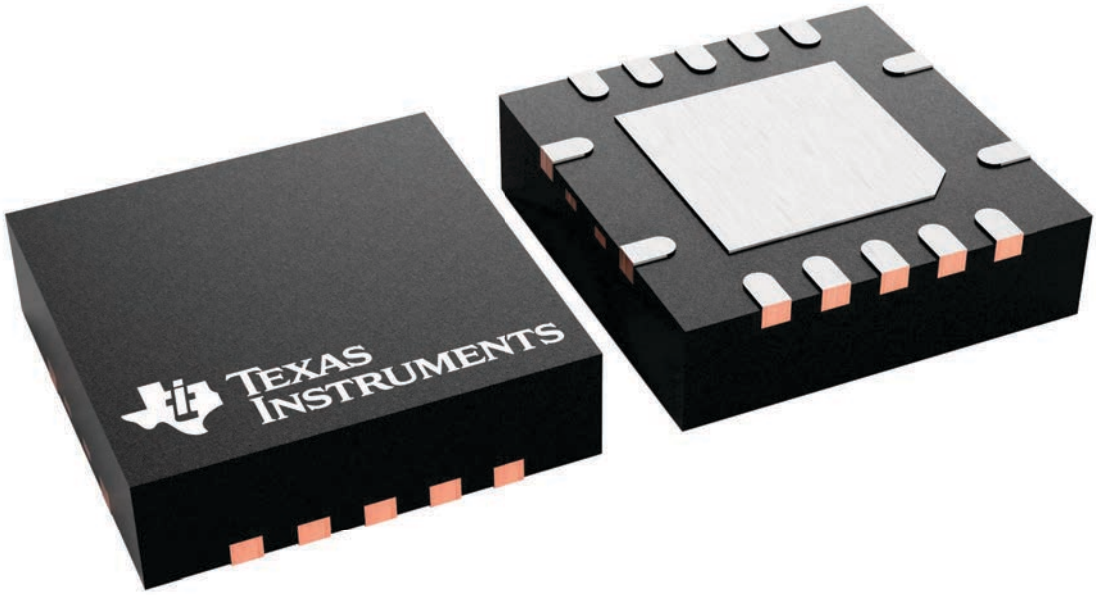

4231541/A

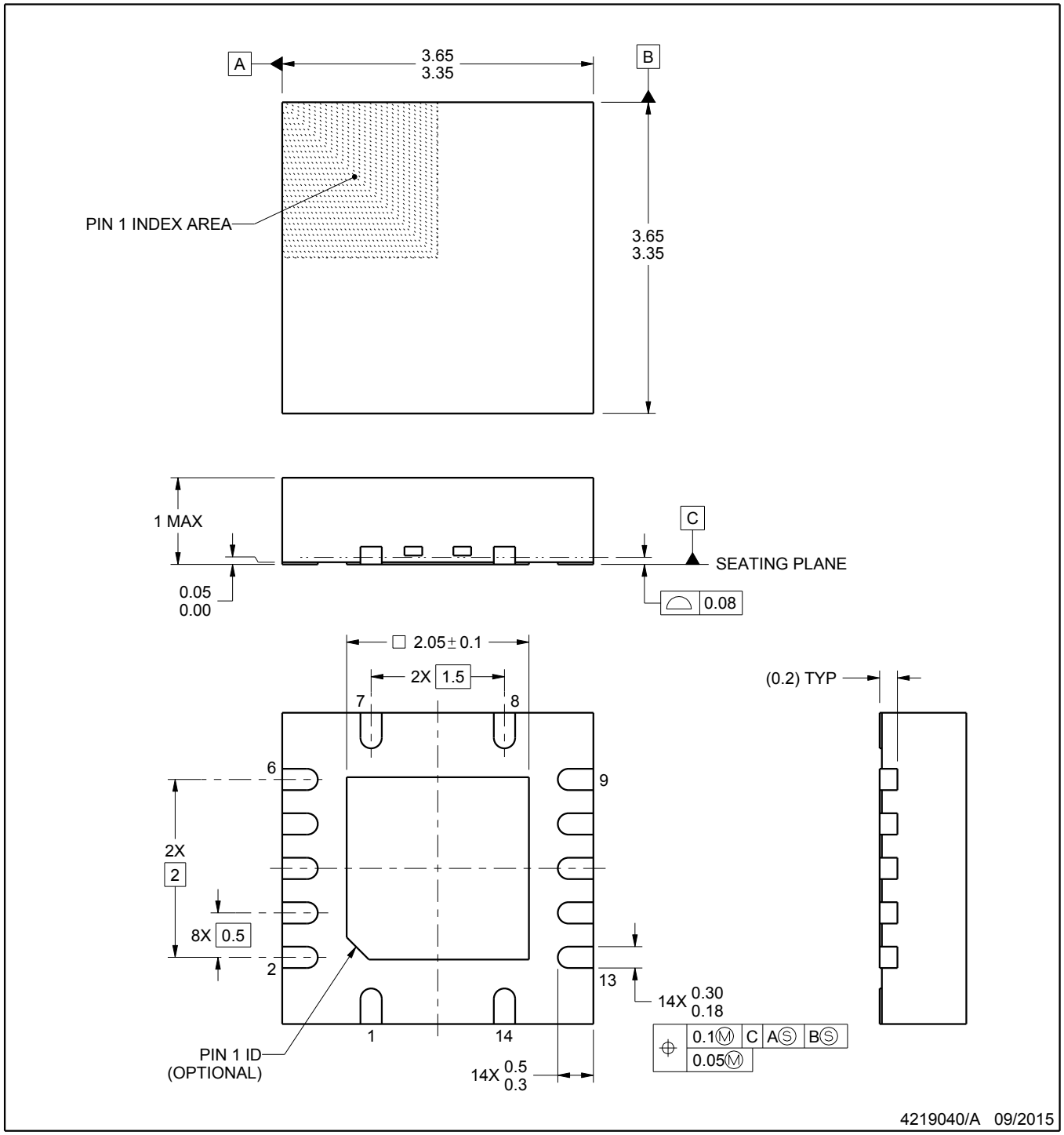

NOTES:

1. All linear dimensions are in millimeters. Any dimensions in parenthesis are for reference only. Dimensioning and tolerancing per ASME Y14.5M.
2. This drawing is subject to change without notice.
3. The package thermal pad must be soldered to the printed circuit board for thermal and mechanical performance.

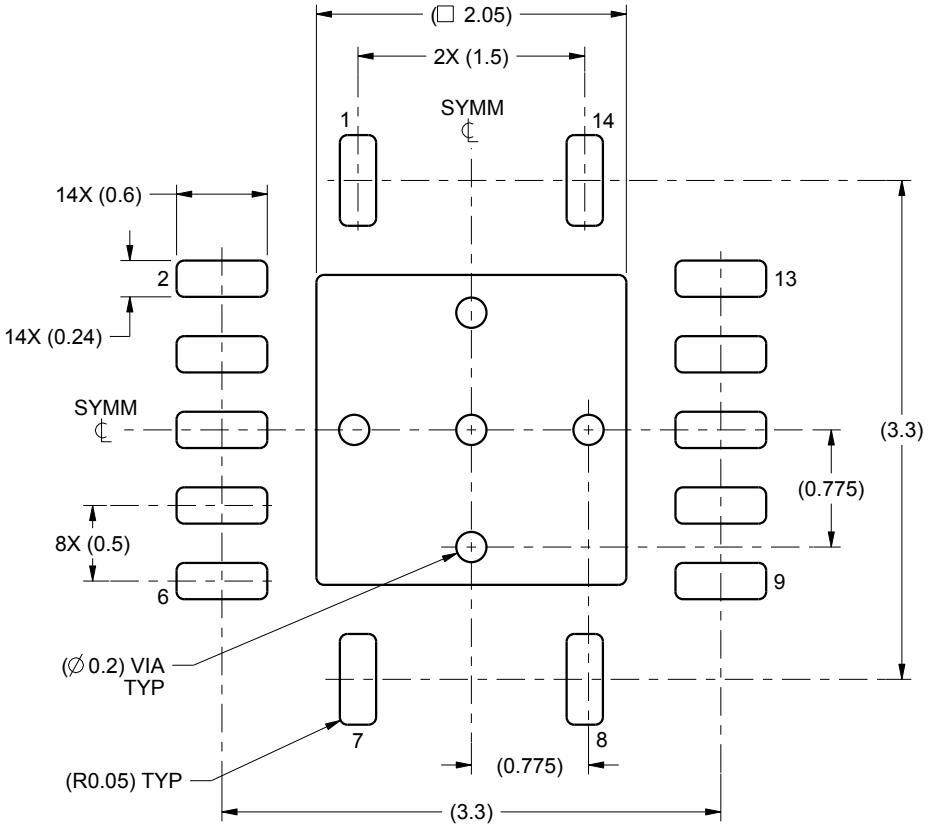

LAND PATTERN EXAMPLE
SCALE:20X

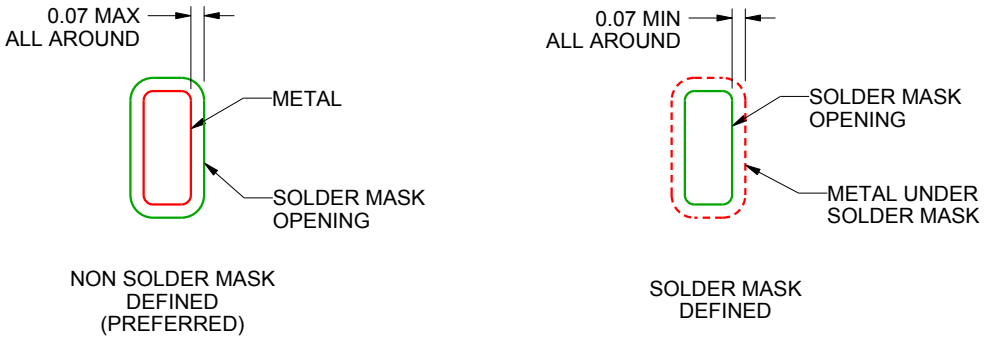

SOLDER MASK DETAILS

4219040/A 09/2015

NOTES: (continued)

4. This package is designed to be soldered to a thermal pad on the board. For more information, see Texas Instruments literature number SLUA271 (www.ti.com/lit/slua271).

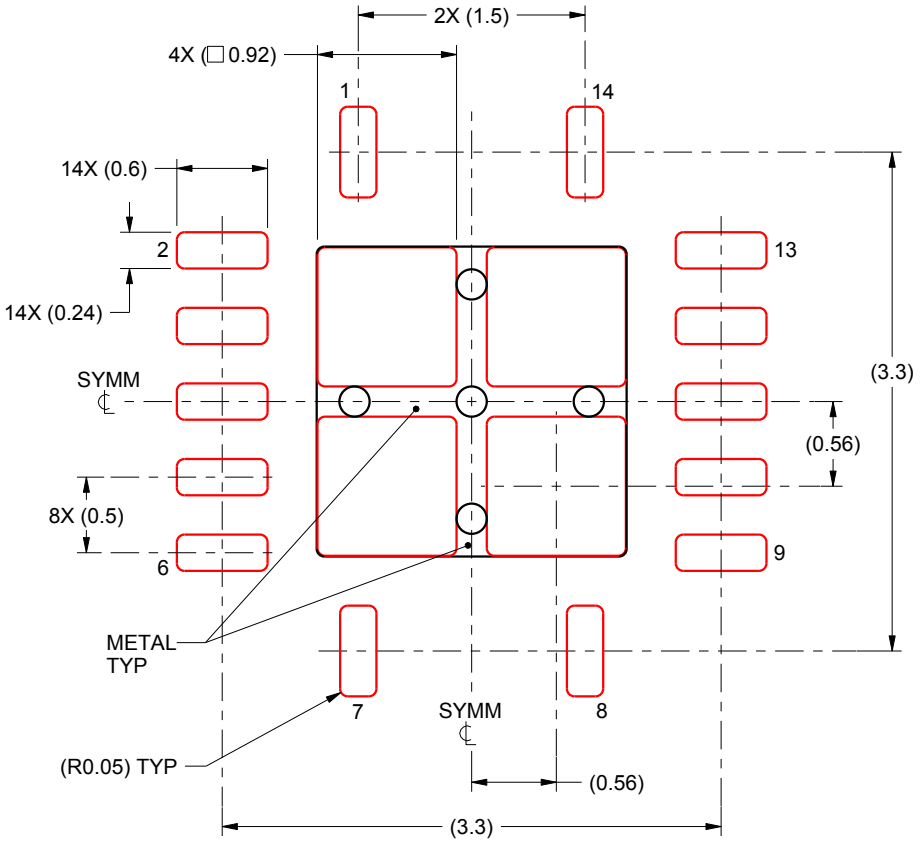

SOLDER PASTE EXAMPLE
BASED ON 0.125 mm THICK STENCIL

EXPOSED PAD
80% PRINTED SOLDER COVERAGE BY AREA
SCALE:20X

4219040/A 09/2015

NOTES: (continued)

5. Laser cutting apertures with trapezoidal walls and rounded corners may offer better paste release. IPC-7525 may have alternate design recommendations.

IMPORTANT NOTICE AND DISCLAIMER

TI PROVIDES TECHNICAL AND RELIABILITY DATA (INCLUDING DATA SHEETS), DESIGN RESOURCES (INCLUDING REFERENCE DESIGNS), APPLICATION OR OTHER DESIGN ADVICE, WEB TOOLS, SAFETY INFORMATION, AND OTHER RESOURCES “AS IS” AND WITH ALL FAULTS, AND DISCLAIMS ALL WARRANTIES, EXPRESS AND IMPLIED, INCLUDING WITHOUT LIMITATION ANY IMPLIED WARRANTIES OF MERCHANTABILITY, FITNESS FOR A PARTICULAR PURPOSE OR NON-INFRINGEMENT OF THIRD PARTY INTELLECTUAL PROPERTY RIGHTS.

These resources are intended for skilled developers designing with TI products. You are solely responsible for (1) selecting the appropriate TI products for your application, (2) designing, validating and testing your application, and (3) ensuring your application meets applicable standards, and any other safety, security, regulatory or other requirements.

These resources are subject to change without notice. TI grants you permission to use these resources only for development of an application that uses the TI products described in the resource. Other reproduction and display of these resources is prohibited. No license is granted to any other TI intellectual property right or to any third party intellectual property right. TI disclaims responsibility for, and you will fully indemnify TI and its representatives against, any claims, damages, costs, losses, and liabilities arising out of your use of these resources.

TI’s products are provided subject to TI’s Terms of Sale or other applicable terms available either on ti.com or provided in conjunction with such TI products. TI’s provision of these resources does not expand or otherwise alter TI’s applicable warranties or warranty disclaimers for TI products.

TI objects to and rejects any additional or different terms you may have proposed.

Mailing Address: Texas Instruments, Post Office Box 655303, Dallas, Texas 75265
Copyright © 2025, Texas Instruments Incorporated