SNx4HC273 Octal D-Type Flip-Flops With Clear

1 Features

- Wide operating voltage range of 2 V to 6 V
- Outputs can drive up to 10 LSTTL loads
- Low power consumption, 80-μA maximum I_{CC}
- Typical t_{pd} = 12 ns
- ±4-mA output drive at 5 V
- Low input current of 1-μA maximum
- Contain eight flip-flops with single-rail outputs
- Direct clear input
- Individual data input to each flip-flop
- On products compliant to MIL-PRF-38535, all parameters are tested unless otherwise noted. On all other products, production processing does not necessarily include testing of all parameters.

2 Applications

- Buffer or storage registers
- Shift registers
- Pattern generators

3 Description

The SNx4HC273 devices are positive-edge-triggered D-type flip-flops with a direct active low clear ($\overline{CLR}$) input.

Information at the data (D) inputs meeting the setup time requirements is transferred to the Q outputs on the positive-going edge of the clock (CLK) pulse. Clock triggering occurs at a particular voltage level and is not related directly to the transition time of the positive-going pulse. When CLK is at either the high or low level, the D input has no effect at the output.

Device Information(1)

PART NUMBER	PACKAGE (PINS)	BODY SIZE (NOM)
SN54HC273J	CDIP (20)	24.20 mm × 6.92 mm
SN54HC273W	CFP (20)	13.09 mm × 6.92 mm
SN54HC273FK	LCCC (20)	8.89 mm × 8.89 mm
SN74HC273D	SOIC (20)	12.80 mm × 7.50 mm
SN74HC273DB	SSOP (20)	7.20 mm × 5.30 mm
SN74HC273NS	SO (20)	12.60 mm × 5.30 mm
SN74HC273N	PDIP (20)	24.33 mm × 6.35 mm
SN74HC273PW	TSSOP (20)	6.50 mm × 4.40 mm

(1) For all available packages, see the orderable addendum at the end of the data sheet.

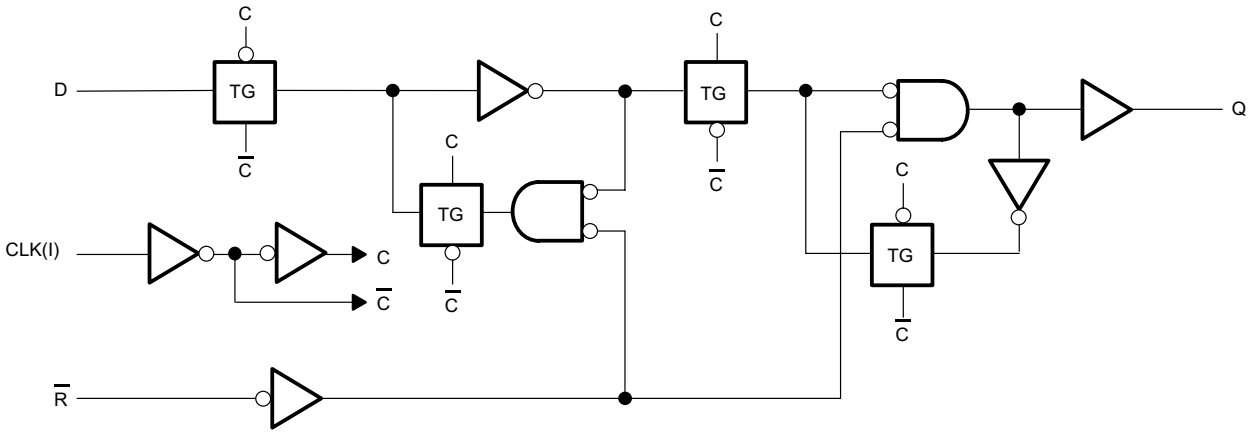

Copyright © 2016, Texas Instruments Incorporated

Functional Block Diagram

An IMPORTANT NOTICE at the end of this data sheet addresses availability, warranty, changes, use in safety-critical applications, intellectual property matters and other important disclaimers. PRODUCTION DATA.

Table of Contents

1 Features....1
2 Applications....1
3 Description....1
4 Revision History....2
5 Pin Configuration and Functions....3
6 Specifications....4
6.1 Absolute Maximum Ratings....4
6.2 ESD Ratings – SN74HC273....4
6.3 Recommended Operating Conditions....4
6.4 Thermal Information....5
6.5 Electrical Characteristics....5
6.6 Electrical Characteristics – SN54HC273....5
6.7 Electrical Characteristics – SN74HC273....6
6.8 Timing Requirements....6
6.9 Timing Requirements – SN54HC273....7
6.10 Timing Requirements – SN74HC273....7
6.11 Switching Characteristics....8
6.12 Switching Characteristics – SN54HC273....8
6.13 Switching Characteristics – SN74HC273....8
6.14 Operating Characteristics....9
6.15 Typical Characteristics....9
7 Parameter Measurement Information....10
8 Detailed Description....11
8.1 Overview....11
8.2 Functional Block Diagram....11
8.3 Feature Description....11
8.4 Device Functional Modes....11
9 Application and Implementation....12
9.1 Application Information....12
9.2 Typical Application....12
10 Power Supply Recommendations....14
11 Layout....14
11.1 Layout Guidelines....14
11.2 Layout Example....14
12 Device and Documentation Support....15
12.1 Documentation Support....15
12.2 Related Links....15
12.3 Receiving Notification of Documentation Updates....15
12.4 Support Resources....15
12.5 Trademarks....15
12.6 Electrostatic Discharge Caution....15
12.7 Glossary....15
13 Mechanical, Packaging, and Orderable Information....15

4 Revision History

NOTE: Page numbers for previous revisions may differ from page numbers in the current version.

Changes from Revision E (August 2003) to Revision F (April 2022) — **Page**

- Updated the ESD ratings table to fit modern standards.... 4
- Changed package thermal impedance, $R_{\theta JA}$, values from: *90.3* to: *122.7* (DB), from: *77.4* to: *109.1* (DW), from: *45.1* to: *84.6* (N), from: *72.6* to: *113.4* (NS), and from: *98.3* to: *131.8* (PW).... 5
- Updated Power Supply Recommendations and Layout Guidelines sections to include current TI terminology... 14

Changes from Revision D (December 1982) to Revision E (July 2016) — **Page**

- Added *Device Information* table, *ESD Ratings* table, *Feature Description* section, *Device Functional Modes*, *Application and Implementation* section, *Power Supply Recommendations* section, *Layout* section, *Device and Documentation Support* section, and *Mechanical, Packaging, and Orderable Information* section.... 1
- Removed *Ordering Information* table, see POA at the end of the data sheet.... 1
- Added Military Disclaimer to *Features* 1

Copyright © 2022 Texas Instruments Incorporated

5 Pin Configuration and Functions

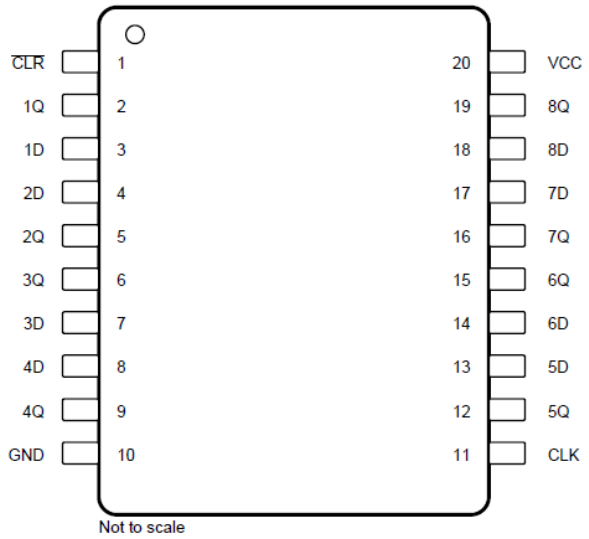

J, W, DB, DW N, NS, or PW Package, 20-Pin CDIP, CFP, SSOP, SOIC, SO, PDIP, or TSSOP (Top View)

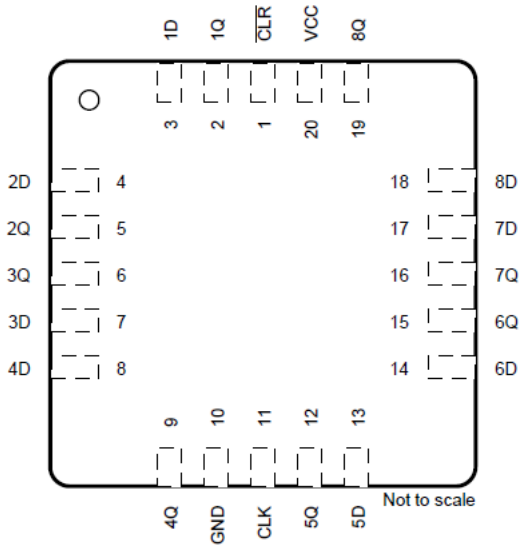

FK Package, 20-Pin LCCC (Top View)

Table 5-1. Pin Functions

PIN		TYPE[(1)]	DESCRIPTION
NO.	NAME		
1	$\overline{CLR}$	I	Active low clear input
2	1Q	O	Output 1
3	1D	I	Input 1
4	2D	I	Input 2
5	2Q	O	Output 2
6	3Q	O	Output 3
7	3D	I	Input 3
8	4D	I	Input 4
9	4Q	O	Output 4
10	GND	—	Ground
11	CLK	I	Clock input
12	5Q	O	Output 5
13	5D	I	Input 5
14	6D	I	Input 6
15	6Q	O	Output 6
16	7Q	O	Output 7
17	7D	I	Input 7
18	8D	I	Input 8
19	8Q	O	Output 8
20	V_{CC}	—	Power

(1) Signal Types: I = Input, O = Output, I/O = Input or Output.

Copyright © 2022 Texas Instruments Incorporated

6 Specifications

6.1 Absolute Maximum Ratings

over operating free-air temperature range (unless otherwise noted)[1]

			MIN	MAX	UNIT
V_{CC}	Supply voltage		–0.5	7	V
I_{IK}	Input clamp current[2]	$V_I < 0$ or $V_I > V_{CC}$		±20	mA
I_{OK}	Output clamp current[2]	$V_O < 0$ or $V_O > V_{CC}$		±20	mA
I_O	Continuous output current	$V_O = 0$ to V_{CC}		±25	mA
	Continuous current through V_{CC} or GND			±50	mA
T_J	Junction temperature			150	°C
T_{stg}	Storage temperature		–65	150	°C

(1) Stresses beyond those listed under *Absolute Maximum Ratings* may cause permanent damage to the device. These are stress ratings only, and functional operation of the device at these or any other conditions beyond those indicated under *Recommended Operating Conditions* is not implied. Exposure to absolute-maximum-rated conditions for extended periods may affect device reliability.
(2) The input and output voltage ratings may be exceeded if the input and output current ratings are observed.

6.2 ESD Ratings – SN74HC273

			VALUE	UNIT
$V_{(ESD)}$	Electrostatic discharge	Human-body model (HBM), per ANSI/ESDA/JEDEC JS-001[1]	±2000	V
		Charged device model (CDM), per ANSI/ESDA/JEDEC JS-002[2]	±500	

(1) JEDEC document JEP155 states that 500-V HBM allows safe manufacturing with a standard ESD control process. Manufacturing with less than 500-V HBM is possible with the necessary precautions.
(2) JEDEC document JEP157 states that 250-V CDM allows safe manufacturing with a standard ESD control process. Manufacturing with less than 250-V CDM is possible with the necessary precautions.

6.3 Recommended Operating Conditions

over operating free-air temperature range (unless otherwise noted)[1]

			MIN	NOM	MAX	UNIT
V_{CC}	Supply voltage		2	5	6	V
V_{IH}	High-level input voltage	V_{CC} = 2 V	1.5			V
		V_{CC} = 4.5 V	3.15			
		V_{CC} = 6 V	4.2			
V_{IL}	Low-level input voltage	V_{CC} = 2 V			0.5	V
		V_{CC} = 4.5 V			1.35	
		V_{CC} = 6 V			1.8	
V_I	Input voltage		0		V_{CC}	V
V_O	Output voltage		0		V_{CC}	V
$\Delta t/\Delta v$	Input transition rise and fall time	V_{CC} = 2 V			1000	ns
		V_{CC} = 4.5 V			500	
		V_{CC} = 6 V			400	
T_A	Operating free-air temperature	SN54HC273	–55		125	°C
		SN74HC273	–40		85	

(1) All unused inputs of the device must be held at V_{CC} or GND to ensure proper device operation. Refer to the TI application report, *Implications of Slow or Floating CMOS Inputs*.

Copyright © 2022 Texas Instruments Incorporated

6.4 Thermal Information

THERMAL METRIC		SN74HC273					UNIT
		DW (SOIC)	DB (SSOP)	N (PDIP)	NS (SO)	PW (TSSOP)	
		20 PINS	20 PINS	20 PINS	20 PINS	20 PINS	
$R_{\theta JA}$	Junction-to-ambient thermal resistance[(1)]	109.1	122.7	84.6	113.4	131.8	°C/W
$R_{\theta JC\ (top)}$	Junction-to-case (top) thermal resistance	76	81.6	72.5	78.6	72.2	°C/W
$R_{\theta JB}$	Junction-to-board thermal resistance	77.6	77.5	65.3	78.4	82.8	°C/W
Ψ_{JT}	Junction-to-top characterization parameter	51.5	46.1	55.3	47.1	21.5	°C/W
Ψ_{JB}	Junction-to-board characterization parameter	77.1	77.1	65.2	78.1	82.4	°C/W
$R_{\theta JC(bot)}$	Junction-to-case (bottom) thermal resistance	N/A	N/A	N/A	N/A	N/A	°C/W

(1) For more information about traditional and new thermal metrics, see *Semiconductor and IC Package Thermal Metrics*.

6.5 Electrical Characteristics

T_A = 25°C (unless otherwise noted)

PARAMETER	TEST CONDITIONS			MIN	TYP	MAX	UNIT
V_{OH}	$V_I = V_{IH}$ or V_{IL}	I_{OH} = –20 µA	V_{CC} = 2 V	1.9	1.998		V
			V_{CC} = 4.5 V	4.4	4.499		
			V_{CC} = 6 V	5.9	5.999		
		I_{OH} = –4 mA, V_{CC} = 4.5 V		3.98	4.3		
		I_{OH} = –5.2 mA, V_{CC} = 6 V		5.48	5.8		
V_{OL}	$V_I = V_{IH}$ or V_{IL}	I_{OL} = 20 µA	V_{CC} = 2 V		0.002	0.1	V
			V_{CC} = 4.5 V		0.001	0.1	
			V_{CC} = 6 V		0.001	0.1	
		I_{OL} = 4 mA, V_{CC} = 4.5 V			0.17	0.26	
		I_{OL} = 5.2 mA, V_{CC} = 6 V			0.15	0.26	
I_I	$V_I = V_{CC}$ or 0, V_{CC} = 6 V				±0.1	±100	nA
I_{CC}	$V_I = V_{CC}$ or 0, I_O = 0, V_{CC} = 6 V					8	µA
C_i	V_{CC} = 2 V to 6 V				3	10	pF

6.6 Electrical Characteristics – SN54HC273

over recommended operating free-air temperature range (unless otherwise noted)

PARAMETER	TEST CONDITIONS			MIN	TYP	MAX	UNIT
V_{OH}	$V_I = V_{IH}$ or V_{IL}	I_{OH} = –20 µA	V_{CC} = 2 V	1.9			V
			V_{CC} = 4.5 V	4.4			
			V_{CC} = 6 V	5.9			
		I_{OH} = –4 mA, V_{CC} = 4.5 V		3.7			
		I_{OH} = –5.2 mA, V_{CC} = 6 V		5.2			
V_{OL}	$V_I = V_{IH}$ or V_{IL}	I_{OL} = 20 µA	V_{CC} = 2 V			0.1	V
			V_{CC} = 4.5 V			0.1	
			V_{CC} = 6 V			0.1	
		I_{OL} = 4 mA, V_{CC} = 4.5 V				0.4	
		I_{OL} = 5.2 mA, V_{CC} = V				0.4	
I_I	$V_I = V_{CC}$ or 0, V_{CC} = 6 V					±1000	nA
I_{CC}	$V_I = V_{CC}$ or 0, I_O = 0, V_{CC} = 6 V					160	µA

Copyright © 2022 Texas Instruments Incorporated

6.6 Electrical Characteristics – SN54HC273 (continued)

over recommended operating free-air temperature range (unless otherwise noted)

PARAMETER	TEST CONDITIONS	MIN	TYP	MAX	UNIT
C_i	V_{CC} = 2 V to 6 V			10	pF

6.7 Electrical Characteristics – SN74HC273

over recommended operating free-air temperature range (unless otherwise noted)

PARAMETER	TEST CONDITIONS			MIN	TYP	MAX	UNIT
V_{OH}	$V_I = V_{IH}$ or V_{IL}	I_{OH} = –20 µA	V_{CC} = 2 V	1.9			V
			V_{CC} = 4.5 V	4.4			
			V_{CC} = 6 V	5.9			
		I_{OH} = –4 mA, V_{CC} = 4.5 V		3.84			
		I_{OH} = –5.2 mA, V_{CC} = 6 V		5.34			
V_{OL}	$V_I = V_{IH}$ or V_{IL}	I_{OL} = 20 µA	V_{CC} = 2 V			0.1	V
			V_{CC} = 4.5 V			0.1	
			V_{CC} = 6 V			0.1	
		I_{OL} = 4 mA, V_{CC} = 4.5 V				0.33	
		I_{OL} = 5.2 mA, V_{CC} = 6 V				0.33	
I_I	$V_I = V_{CC}$ or 0, V_{CC} = 6 V					±1000	nA
I_{CC}	$V_I = V_{CC}$ or 0, I_O = 0, V_{CC} = 6 V					80	µA
C_i	V_{CC} = 2 V to 6 V					10	pF

6.8 Timing Requirements

T_A = 25°C (unless otherwise noted)

				MIN	MAX	UNIT
f_{clock}	Clock frequency		V_{CC} = 2 V		5	MHz
			V_{CC} = 4.5 V		27	
			V_{CC} = 6 V		32	
t_w	Pulse duration	$\overline{CLR}$ low	V_{CC} = 2 V	80		ns
			V_{CC} = 4.5 V	16		
			V_{CC} = 6 V	14		
		CLK high or low	V_{CC} = 2 V	80		
			V_{CC} = 4.5 V	16		
			V_{CC} = 6 V	14		
t_{su}	Setup time before CLK↑	Data	V_{CC} = 2 V	100		ns
			V_{CC} = 4.5 V	20		
			V_{CC} = 6 V	17		
		$\overline{CLR}$ inactive	V_{CC} = 2 V	100		
			V_{CC} = 4.5 V	20		
			V_{CC} = 6 V	17		
t_h	Hold time, data after CLK↑		V_{CC} = 2 V	0		ns
			V_{CC} = 4.5 V	0		
			V_{CC} = 6 V	0		

Copyright © 2022 Texas Instruments Incorporated

6.9 Timing Requirements – SN54HC273

over recommended operating free-air temperature range (unless otherwise noted)

				MIN	MAX	UNIT
f_{clock}	Clock frequency		V_{CC} = 2 V		4	MHz
			V_{CC} = 4.5 V		18	
			V_{CC} = 6 V		21	
t_w	Pulse duration	$\overline{CLR}$ low	V_{CC} = 2 V	120		ns
			V_{CC} = 4.5 V	24		
			V_{CC} = 6 V	20		
		CLK high or low	V_{CC} = 2 V	120		
			V_{CC} = 4.5 V	24		
			V_{CC} = 6 V	20		
t_{su}	Setup time before CLK↑	Data	V_{CC} = 2 V	150		ns
			V_{CC} = 4.5 V	30		
			V_{CC} = 6 V	25		
		$\overline{CLR}$ inactive	V_{CC} = 2 V	150		
			V_{CC} = 4.5 V	30		
			V_{CC} = 6 V	25		
t_h	Hold time, data after CLK↑		V_{CC} = 2 V	0		ns
			V_{CC} = 4.5 V	0		
			V_{CC} = 6 V	0		

6.10 Timing Requirements – SN74HC273

over recommended operating free-air temperature range (unless otherwise noted)

				MIN	MAX	UNIT
f_{clock}	Clock frequency		V_{CC} = 2 V		4	MHz
			V_{CC} = 4.5 V		21	
			V_{CC} = 6 V		25	
t_w	Pulse duration	$\overline{CLR}$ low	V_{CC} = 2 V	100		ns
			V_{CC} = 4.5 V	20		
			V_{CC} = 6 V	17		
		CLK high or low	V_{CC} = 2 V	100		
			V_{CC} = 4.5 V	20		
			V_{CC} = 6 V	17		
t_{su}	Setup time before CLK↑	Data	V_{CC} = 2 V	125		ns
			V_{CC} = 4.5 V	25		
			V_{CC} = 6 V	21		
		$\overline{CLR}$ inactive	V_{CC} = 2 V	125		
			V_{CC} = 4.5 V	25		
			V_{CC} = 6 V	21		
t_h	Hold time, data after CLK↑		V_{CC} = 2 V	0		ns
			V_{CC} = 4.5 V	0		
			V_{CC} = 6 V	0		

Copyright © 2022 Texas Instruments Incorporated

6.11 Switching Characteristics

T_A = 25°C and C_L = 50 pF (unless otherwise noted; see Figure 7-1)

PARAMETER	TEST CONDITIONS		MIN	TYP	MAX	UNIT
f_{max}		V_{CC} = 2 V	5	11		MHz
		V_{CC} = 4.5 V	27	50		
		V_{CC} = 6 V	32	60		
t_{PHL}	From $\overline{CLR}$ (input) to any (output)	V_{CC} = 2 V		55	160	ns
		V_{CC} = 4.5 V		15	32	
		V_{CC} = 6 V		12	27	
t_{pd}	From CLK (input) to any (output)	V_{CC} = 2 V		56	160	ns
		V_{CC} = 4.5 V		15	32	
		V_{CC} = 6 V		13	27	
t_t	To any (output)	V_{CC} = 2 V		38	75	ns
		V_{CC} = 4.5 V		8	15	
		V_{CC} = 6 V		6	13	

6.12 Switching Characteristics – SN54HC273

over recommended operating free-air temperature range, C_L = 50 pF (unless otherwise noted; see Figure 7-1)

PARAMETER	TEST CONDITIONS		MIN	MAX	UNIT
f_{max}		V_{CC} = 2 V	4		MHz
		V_{CC} = 4.5 V	18		
		V_{CC} = 6 V	21		
t_{PHL}	From $\overline{CLR}$ (input) to any (output)	V_{CC} = 2 V		240	ns
		V_{CC} = 4.5 V		48	
		V_{CC} = 6 V		41	
t_{pd}	From CLK (input) to any (output)	V_{CC} = 2 V		240	ns
		V_{CC} = 4.5 V		48	
		V_{CC} = 6 V		41	
t_t	To any (output)	V_{CC} = 2 V		110	ns
		V_{CC} = 4.5 V		22	
		V_{CC} = 6 V		19	

6.13 Switching Characteristics – SN74HC273

over recommended operating free-air temperature range, C_L = 50 pF (unless otherwise noted; see Figure 7-1)

PARAMETER	TEST CONDITIONS		MIN	MAX	UNIT
f_{max}		V_{CC} = 2 V	4		MHz
		V_{CC} = 4.5 V	21		
		V_{CC} = 6 V	25		
t_{PHL}	From $\overline{CLR}$ (input) to any (output)	V_{CC} = 2 V		200	ns
		V_{CC} = 4.5 V		40	
		V_{CC} = 6 V		34	
t_{pd}	From CLK (input) to any (output)	V_{CC} = 2 V		200	ns
		V_{CC} = 4.5 V		40	
		V_{CC} = 6 V		34	

Copyright © 2022 Texas Instruments Incorporated

6.13 Switching Characteristics – SN74HC273 (continued)

over recommended operating free-air temperature range, C_L = 50 pF (unless otherwise noted; see Figure 7-1)

PARAMETER	TEST CONDITIONS		MIN	MAX	UNIT
t_t	To any (output)	V_{CC} = 2 V		95	ns
		V_{CC} = 4.5 V		19	
		V_{CC} = 6 V		16	

6.14 Operating Characteristics

T_A = 25°C

PARAMETER		TEST CONDITIONS	TYP	UNIT
C_{pd}	Power dissipation capacitance per flip-flop	No load	35	pF

6.15 Typical Characteristics

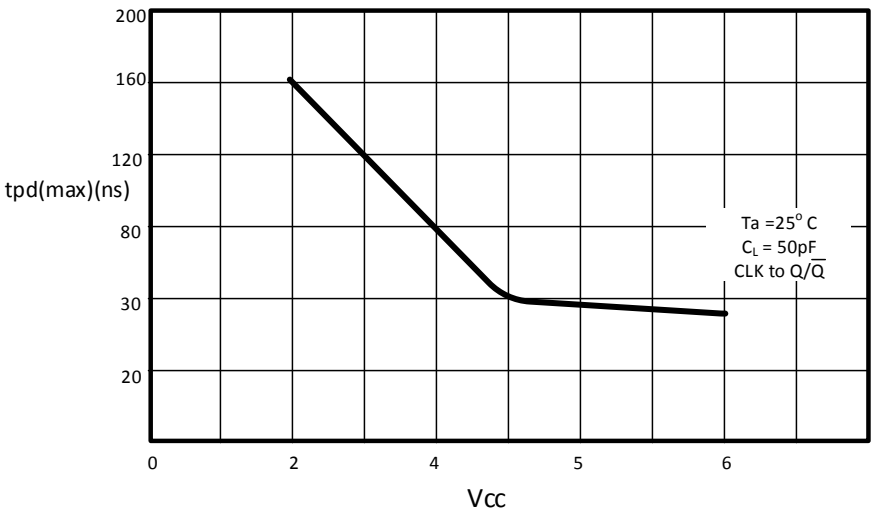

Figure 6-1. Max t_{pd} vs V_{CC}

7 Parameter Measurement Information

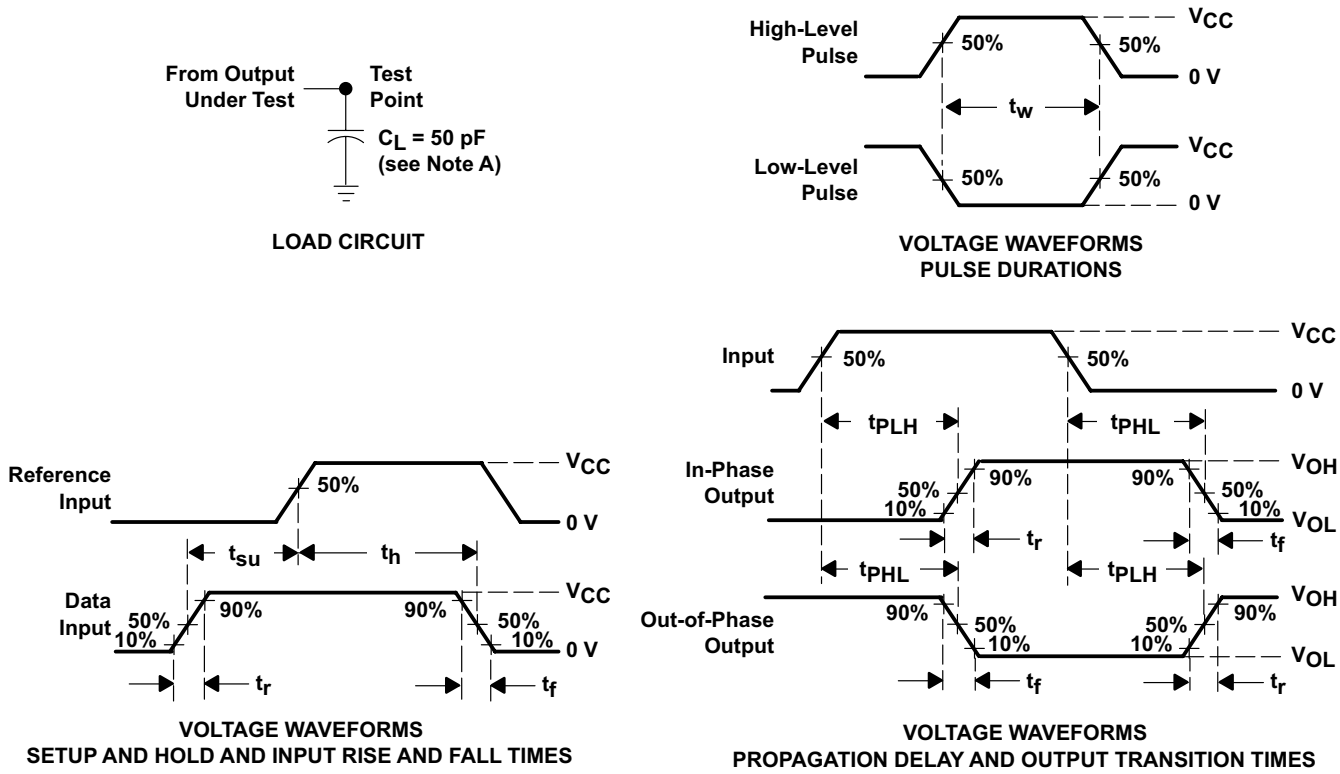

NOTES: A. C_L includes probe and test-fixture capacitance.
B. Phase relationships between waveforms were chosen arbitrarily. All input pulses are supplied by generators having the following characteristics: PRR ≤ 1 MHz, Z_O = 50 Ω, t_r = 6 ns, t_f = 6 ns.
C. For clock inputs, f_{max} is measured when the input duty cycle is 50%.
D. The outputs are measured one at a time with one input transition per measurement.
E. t_{PLH} and t_{PHL} are the same as t_{pd}.

Figure 7-1. Load Circuit and Voltage Waveforms

Copyright © 2022 Texas Instruments Incorporated

8 Detailed Description

8.1 Overview

The SNx4HC273 contains eight flip-flops with single-rail outputs with individual data input to each flip-flop. The outputs can drive up to 10 LSTTL loads. The device has direct active low clear input.

8.2 Functional Block Diagram

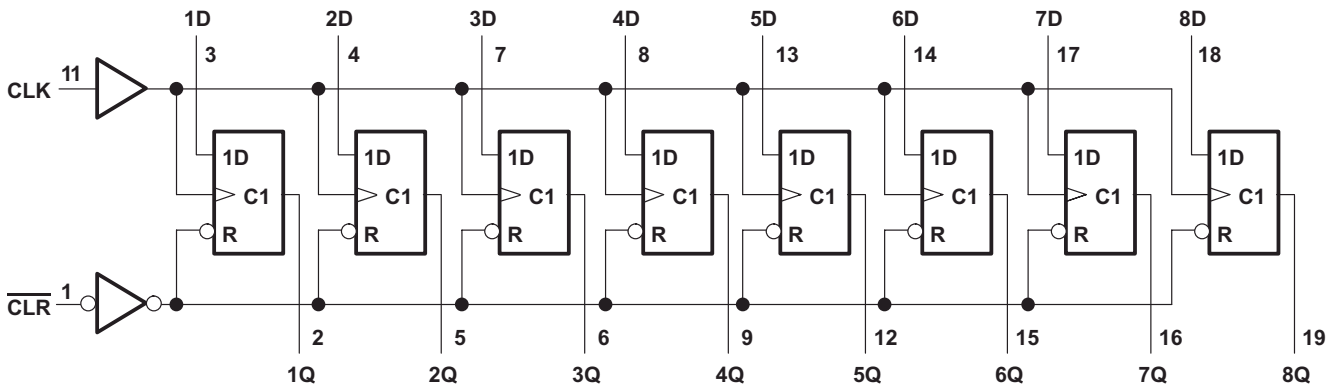

Copyright © 2016, Texas Instruments Incorporated

8.3 Feature Description

The SNx4HC273 has low power consumption with a maximum$_{CC}$ of 80 µA.

The typical t_{pd} for the SNx4HC273 is 12 ns and the output drive is ±4 mA at 5 V.

The SNx4HC273 also has very low input current, with the maximum set at 1 µA.

8.4 Device Functional Modes

Table 8-1 lists the functional modes of the SNx4HC273.

Table 8-1. Function Table (Each Flip-Flop)

INPUTS			OUTPUT Q
$\overline{CLR}$	CLK	D	
L	X	X	L
H	↑	H	H
H	↑	L	L
H	L	X	Q_0

9 Application and Implementation

Note

Information in the following applications sections is not part of the TI component specification, and TI does not warrant its accuracy or completeness. TI's customers are responsible for determining suitability of components for their purposes, as well as validating and testing their design implementation to confirm system functionality.

9.1 Application Information

The SNx4HC273 is octal D Flip flop with active low clear input. It has low input current and low power consumption. The D flip-flop can be used as a Toggle flip flop using an XOR gate at the input. The output toggles from the previous state whenever the T input is high.

9.2 Typical Application

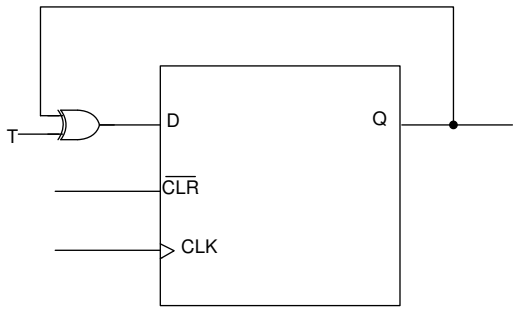

Copyright © 2016, Texas Instruments Incorporated

9.2.1 Design Requirements

This SNx4Hc273 device uses CMOS technology and has balanced output drive.

9.2.2 Detailed Design Procedure

1. Recommended input conditions:
   - Rise time and fall time specifications: see (Δt/ΔV) in *Recommended Operating Conditions*.
   - Specified high and low levels: see (V_{IH} and V_{IL}) in *Recommended Operating Conditions*.
   - Inputs are not overvoltage tolerant and must not be above any valid V_{CC} as per *Recommended Operating Conditions*.
2. Absolute maximum output conditions:
   - Continuos output currents must not exceed (I_O max) per output and must not exceed total current (continuous current through V_{CC} or GND) for the part. These limits are located in the *Absolute Maximum Ratings*.
   - Outputs must not be pulled above V_{CC}.

Copyright © 2022 Texas Instruments Incorporated

9.2.3 Application Curve

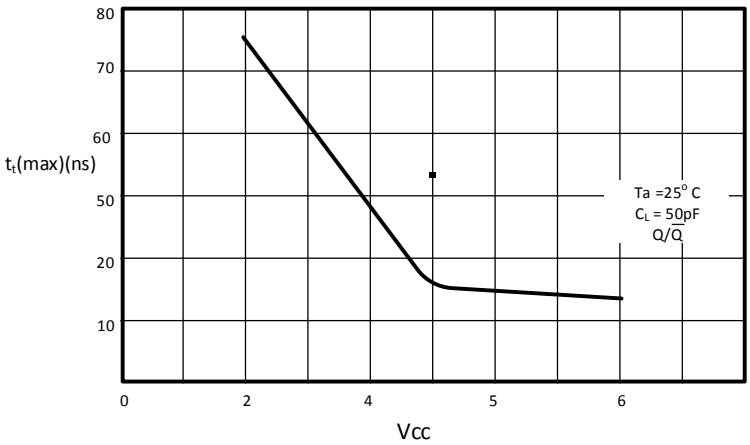

Figure 9-1. Maximum Transition Time vs V_{CC}

10 Power Supply Recommendations

The power supply can be any voltage between the minimum and maximum supply voltage rating located in the *Recommended Operating Conditions*. Each V_{CC} terminal should have a good bypass capacitor to prevent power disturbance. A 0.1-µF capacitor is recommended for this device. It is acceptable to parallel multiple bypass caps to reject different frequencies of noise. The 0.1-µF and 1-µF capacitors are commonly used in parallel. The bypass capacitor should be installed as close to the power terminal as possible for best results.

11 Layout

11.1 Layout Guidelines

When using multiple-input and multiple-channel logic devices inputs must not ever be left floating. In many cases, functions or parts of functions of digital logic devices are unused; for example, when only two inputs of a triple-input AND gate are used or only 3 of the 4 buffer gates are used. Such unused input pins must not be left unconnected because the undefined voltages at the outside connections result in undefined operational states. All unused inputs of digital logic devices must be connected to a logic high or logic low voltage, as defined by the input voltage specifications, to prevent them from floating. The logic level that must be applied to any particular unused input depends on the function of the device. Generally, the inputs are tied to GND or VCC, whichever makes more sense for the logic function or is more convenient.

11.2 Layout Example

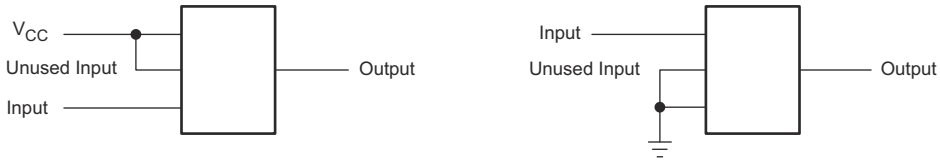

Figure 11-1. SNx4HC273 Layout

Copyright © 2022 Texas Instruments Incorporated

12 Device and Documentation Support

12.1 Documentation Support

12.1.1 Related Documentation

For related documentation, see the following:

- Texas Instruments, *Implications of Slow or Floating CMOS Inputs* application report

12.2 Related Links

The table below lists quick access links. Categories include technical documents, support and community resources, tools and software, and quick access to sample or buy.

Table 12-1. Related Links

PARTS	PRODUCT FOLDER	SAMPLE & BUY	TECHNICAL DOCUMENTS	TOOLS & SOFTWARE	SUPPORT & COMMUNITY
SN54HC273	Click here	Click here	Click here	Click here	Click here
SN74HC273	Click here	Click here	Click here	Click here	Click here

12.3 Receiving Notification of Documentation Updates

To receive notification of documentation updates, navigate to the device product folder on ti.com. In the upper right corner, click on *Alert me* to register and receive a weekly digest of any product information that has changed. For change details, review the revision history included in any revised document.

12.4 Support Resources

TI E2E™ support forums are an engineer's go-to source for fast, verified answers and design help — straight from the experts. Search existing answers or ask your own question to get the quick design help you need.

Linked content is provided "AS IS" by the respective contributors. They do not constitute TI specifications and do not necessarily reflect TI's views; see TI's Terms of Use.

12.5 Trademarks

TI E2E™ is a trademark of Texas Instruments.
All trademarks are the property of their respective owners.

12.6 Electrostatic Discharge Caution

This integrated circuit can be damaged by ESD. Texas Instruments recommends that all integrated circuits be handled with appropriate precautions. Failure to observe proper handling and installation procedures can cause damage.

ESD damage can range from subtle performance degradation to complete device failure. Precision integrated circuits may be more susceptible to damage because very small parametric changes could cause the device not to meet its published specifications.

12.7 Glossary

TI Glossary This glossary lists and explains terms, acronyms, and definitions.

13 Mechanical, Packaging, and Orderable Information

The following pages include mechanical packaging and orderable information. This information is the most current data available for the designated devices. This data is subject to change without notice and revision of this document. For browser based versions of this data sheet, refer to the left hand navigation.

PACKAGING INFORMATION

Orderable part number	Status (1)	Material type (2)	Package | Pins	Package qty | Carrier	RoHS (3)	Lead finish/ Ball material (4)	MSL rating/ Peak reflow (5)	Op temp (°C)	Part marking (6)
5962-8409901VRA	Active	Production	CDIP (J) | 20	20 | TUBE	No	SNPB	N/A for Pkg Type	-55 to 125	5962-8409901VR A SNV54HC273J
5962-8409901VRA.A	Active	Production	CDIP (J) | 20	20 | TUBE	No	SNPB	N/A for Pkg Type	-55 to 125	5962-8409901VR A SNV54HC273J
5962-8409901VSA	Active	Production	CFP (W) | 20	25 | TUBE	No	SNPB	N/A for Pkg Type	-55 to 125	5962-8409901VS A SNV54HC273W
5962-8409901VSA.A	Active	Production	CFP (W) | 20	25 | TUBE	No	SNPB	N/A for Pkg Type	-55 to 125	5962-8409901VS A SNV54HC273W
84099012A	Active	Production	LCCC (FK) | 20	55 | TUBE	No	SNPB	N/A for Pkg Type	-55 to 125	84099012A SNJ54HC 273FK
8409901RA	Active	Production	CDIP (J) | 20	20 | TUBE	No	SNPB	N/A for Pkg Type	-55 to 125	8409901RA SNJ54HC273J
8409901SA	Active	Production	CFP (W) | 20	25 | TUBE	No	SNPB	N/A for Pkg Type	-55 to 125	8409901SA SNJ54HC273W
JM38510/65601BRA	Active	Production	CDIP (J) | 20	20 | TUBE	No	SNPB	N/A for Pkg Type	-55 to 125	JM38510/ 65601BRA
JM38510/65601BRA.A	Active	Production	CDIP (J) | 20	20 | TUBE	No	SNPB	N/A for Pkg Type	-55 to 125	JM38510/ 65601BRA
JM38510/65601BSA	Active	Production	CFP (W) | 20	25 | TUBE	No	SNPB	N/A for Pkg Type	-55 to 125	JM38510/ 65601BSA
JM38510/65601BSA.A	Active	Production	CFP (W) | 20	25 | TUBE	No	SNPB	N/A for Pkg Type	-55 to 125	JM38510/ 65601BSA
M38510/65601BRA	Active	Production	CDIP (J) | 20	20 | TUBE	No	SNPB	N/A for Pkg Type	-55 to 125	JM38510/ 65601BRA
M38510/65601BSA	Active	Production	CFP (W) | 20	25 | TUBE	No	SNPB	N/A for Pkg Type	-55 to 125	JM38510/ 65601BSA
SN54HC273J	Active	Production	CDIP (J) | 20	20 | TUBE	No	SNPB	N/A for Pkg Type	-55 to 125	SN54HC273J
SN54HC273J.A	Active	Production	CDIP (J) | 20	20 | TUBE	No	SNPB	N/A for Pkg Type	-55 to 125	SN54HC273J
SN74HC273DBR	Active	Production	SSOP (DB) | 20	2000 | LARGE T&R	Yes	NIPDAU | NIPDAU	Level-1-260C-UNLIM	-40 to 85	HC273

Orderable part number	Status (1)	Material type (2)	Package | Pins	Package qty | Carrier	RoHS (3)	Lead finish/ Ball material (4)	MSL rating/ Peak reflow (5)	Op temp (°C)	Part marking (6)
SN74HC273DBR.A	Active	Production	SSOP (DB) | 20	2000 | LARGE T&R	Yes	NIPDAU	Level-1-260C-UNLIM	-40 to 85	HC273
SN74HC273DW	Obsolete	Production	SOIC (DW) | 20	-	-	Call TI	Call TI	-40 to 85	HC273
SN74HC273DWR	Active	Production	SOIC (DW) | 20	2000 | LARGE T&R	Yes	NIPDAU	Level-1-260C-UNLIM	-40 to 85	HC273
SN74HC273DWR.A	Active	Production	SOIC (DW) | 20	2000 | LARGE T&R	Yes	NIPDAU	Level-1-260C-UNLIM	-40 to 85	HC273
SN74HC273DWRE4	Active	Production	SOIC (DW) | 20	2000 | LARGE T&R	Yes	NIPDAU	Level-1-260C-UNLIM	-40 to 85	HC273
SN74HC273DWRG4	Active	Production	SOIC (DW) | 20	2000 | LARGE T&R	Yes	NIPDAU	Level-1-260C-UNLIM	-40 to 85	HC273
SN74HC273DWRG4.A	Active	Production	SOIC (DW) | 20	2000 | LARGE T&R	Yes	NIPDAU	Level-1-260C-UNLIM	-40 to 85	HC273
SN74HC273N	Active	Production	PDIP (N) | 20	20 | TUBE	Yes	NIPDAU	N/A for Pkg Type	-40 to 85	SN74HC273N
SN74HC273N.A	Active	Production	PDIP (N) | 20	20 | TUBE	Yes	NIPDAU	N/A for Pkg Type	-40 to 85	SN74HC273N
SN74HC273NE4	Active	Production	PDIP (N) | 20	20 | TUBE	Yes	NIPDAU	N/A for Pkg Type	-40 to 85	SN74HC273N
SN74HC273NSR	Active	Production	SOP (NS) | 20	2000 | LARGE T&R	Yes	NIPDAU | NIPDAU	Level-1-260C-UNLIM	-40 to 85	HC273
SN74HC273NSR.A	Active	Production	SOP (NS) | 20	2000 | LARGE T&R	Yes	NIPDAU	Level-1-260C-UNLIM	-40 to 85	HC273
SN74HC273PW	Obsolete	Production	TSSOP (PW) | 20	-	-	Call TI	Call TI	-40 to 85	HC273
SN74HC273PWR	Active	Production	TSSOP (PW) | 20	2000 | LARGE T&R	Yes	NIPDAU | NIPDAU	Level-1-260C-UNLIM	-40 to 85	HC273
SN74HC273PWR.A	Active	Production	TSSOP (PW) | 20	2000 | LARGE T&R	Yes	NIPDAU	Level-1-260C-UNLIM	-40 to 85	HC273
SN74HC273PWRG4	Active	Production	TSSOP (PW) | 20	2000 | LARGE T&R	Yes	NIPDAU	Level-1-260C-UNLIM	-40 to 85	HC273
SN74HC273PWT	Obsolete	Production	TSSOP (PW) | 20	-	-	Call TI	Call TI	-40 to 85	HC273
SNJ54HC273FK	Active	Production	LCCC (FK) | 20	55 | TUBE	No	SNPB	N/A for Pkg Type	-55 to 125	84099012A SNJ54HC 273FK
SNJ54HC273FK.A	Active	Production	LCCC (FK) | 20	55 | TUBE	No	SNPB	N/A for Pkg Type	-55 to 125	84099012A SNJ54HC 273FK
SNJ54HC273J	Active	Production	CDIP (J) | 20	20 | TUBE	No	SNPB	N/A for Pkg Type	-55 to 125	8409901RA SNJ54HC273J
SNJ54HC273J.A	Active	Production	CDIP (J) | 20	20 | TUBE	No	SNPB	N/A for Pkg Type	-55 to 125	8409901RA SNJ54HC273J
SNJ54HC273W	Active	Production	CFP (W) | 20	25 | TUBE	No	SNPB	N/A for Pkg Type	-55 to 125	8409901SA SNJ54HC273W
SNJ54HC273W.A	Active	Production	CFP (W) | 20	25 | TUBE	No	SNPB	N/A for Pkg Type	-55 to 125	8409901SA SNJ54HC273W

(1) **Status:** For more details on status, see our product life cycle.

(2) **Material type:** When designated, preproduction parts are prototypes/experimental devices, and are not yet approved or released for full production. Testing and final process, including without limitation quality assurance, reliability performance testing, and/or process qualification, may not yet be complete, and this item is subject to further changes or possible discontinuation. If available for ordering, purchases will be subject to an additional waiver at checkout, and are intended for early internal evaluation purposes only. These items are sold without warranties of any kind.

(3) **RoHS values:** Yes, No, RoHS Exempt. See the TI RoHS Statement for additional information and value definition.

(4) **Lead finish/Ball material:** Parts may have multiple material finish options. Finish options are separated by a vertical ruled line. Lead finish/Ball material values may wrap to two lines if the finish value exceeds the maximum column width.

(5) **MSL rating/Peak reflow:** The moisture sensitivity level ratings and peak solder (reflow) temperatures. In the event that a part has multiple moisture sensitivity ratings, only the lowest level per JEDEC standards is shown. Refer to the shipping label for the actual reflow temperature that will be used to mount the part to the printed circuit board.

(6) **Part marking:** There may be an additional marking, which relates to the logo, the lot trace code information, or the environmental category of the part.

Multiple part markings will be inside parentheses. Only one part marking contained in parentheses and separated by a "~" will appear on a part. If a line is indented then it is a continuation of the previous line and the two combined represent the entire part marking for that device.

Important Information and Disclaimer: The information provided on this page represents TI's knowledge and belief as of the date that it is provided. TI bases its knowledge and belief on information provided by third parties, and makes no representation or warranty as to the accuracy of such information. Efforts are underway to better integrate information from third parties. TI has taken and continues to take reasonable steps to provide representative and accurate information but may not have conducted destructive testing or chemical analysis on incoming materials and chemicals. TI and TI suppliers consider certain information to be proprietary, and thus CAS numbers and other limited information may not be available for release.

In no event shall TI's liability arising out of such information exceed the total purchase price of the TI part(s) at issue in this document sold by TI to Customer on an annual basis.

OTHER QUALIFIED VERSIONS OF SN54HC273, SN54HC273-SP, SN74HC273 :

- Catalog : SN74HC273, SN54HC273
- Automotive : SN74HC273-Q1, SN74HC273-Q1
- Military : SN54HC273
- Space : SN54HC273-SP

NOTE: Qualified Version Definitions:

- Catalog - TI's standard catalog product
- Automotive - Q100 devices qualified for high-reliability automotive applications targeting zero defects
- Military - QML certified for Military and Defense Applications
- Space - Radiation tolerant, ceramic packaging and qualified for use in Space-based application

TAPE AND REEL INFORMATION

REEL DIMENSIONS

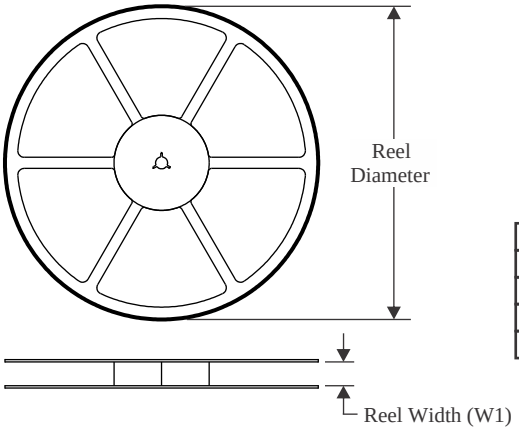

TAPE DIMENSIONS

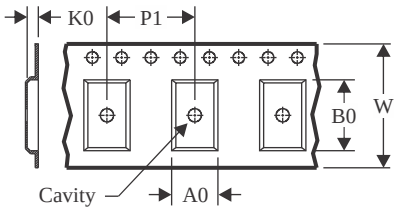

A0	Dimension designed to accommodate the component width
B0	Dimension designed to accommodate the component length
K0	Dimension designed to accommodate the component thickness
W	Overall width of the carrier tape
P1	Pitch between successive cavity centers

QUADRANT ASSIGNMENTS FOR PIN 1 ORIENTATION IN TAPE

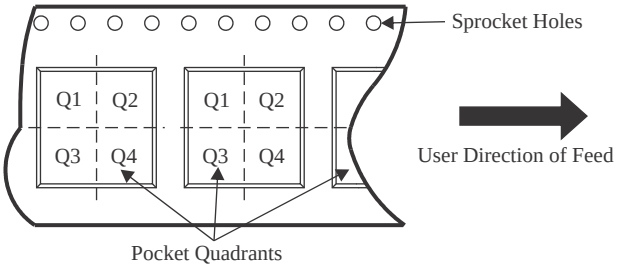

*All dimensions are nominal

Device	Package Type	Package Drawing	Pins	SPQ	Reel Diameter (mm)	Reel Width W1 (mm)	A0 (mm)	B0 (mm)	K0 (mm)	P1 (mm)	W (mm)	Pin1 Quadrant
SN74HC273DBR	SSOP	DB	20	2000	330.0	16.4	8.2	7.5	2.5	12.0	16.0	Q1
SN74HC273DWR	SOIC	DW	20	2000	330.0	24.4	10.9	13.3	2.7	12.0	24.0	Q1
SN74HC273DWRG4	SOIC	DW	20	2000	330.0	24.4	10.8	13.3	2.7	12.0	24.0	Q1
SN74HC273NSR	SOP	NS	20	2000	330.0	24.4	8.4	13.0	2.5	12.0	24.0	Q1
SN74HC273PWR	TSSOP	PW	20	2000	330.0	16.4	6.95	7.0	1.4	8.0	16.0	Q1

TAPE AND REEL BOX DIMENSIONS

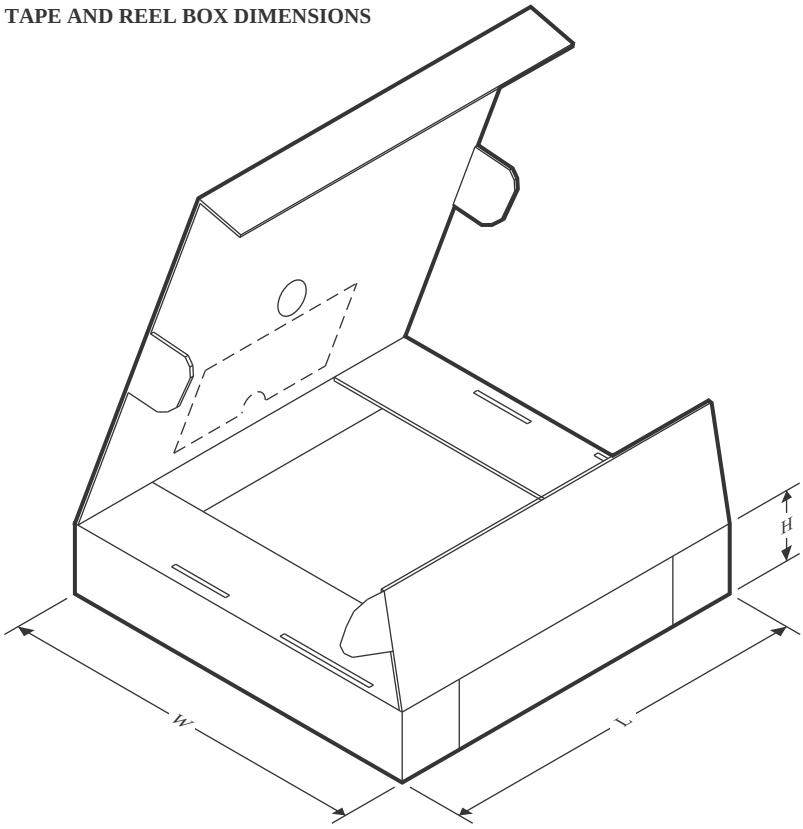

*All dimensions are nominal

Device	Package Type	Package Drawing	Pins	SPQ	Length (mm)	Width (mm)	Height (mm)
SN74HC273DBR	SSOP	DB	20	2000	356.0	356.0	35.0
SN74HC273DWR	SOIC	DW	20	2000	367.0	367.0	45.0
SN74HC273DWRG4	SOIC	DW	20	2000	367.0	367.0	45.0
SN74HC273NSR	SOP	NS	20	2000	367.0	367.0	45.0
SN74HC273PWR	TSSOP	PW	20	2000	356.0	356.0	35.0

TUBE

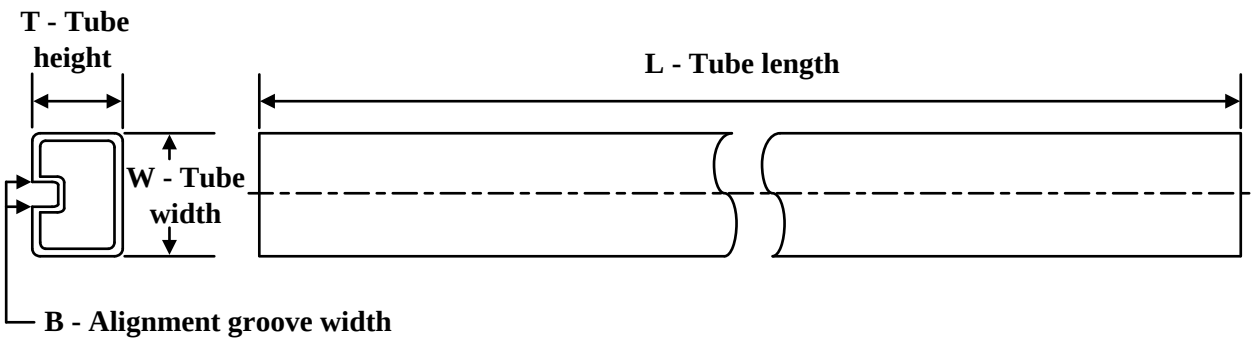

*All dimensions are nominal

Device	Package Name	Package Type	Pins	SPQ	L (mm)	W (mm)	T (µm)	B (mm)
5962-8409901VSA	W	CFP	20	25	506.98	26.16	6220	NA
5962-8409901VSA.A	W	CFP	20	25	506.98	26.16	6220	NA
84099012A	FK	LCCC	20	55	506.98	12.06	2030	NA
8409901SA	W	CFP	20	25	506.98	26.16	6220	NA
JM38510/65601BSA	W	CFP	20	25	506.98	26.16	6220	NA
JM38510/65601BSA.A	W	CFP	20	25	506.98	26.16	6220	NA
M38510/65601BSA	W	CFP	20	25	506.98	26.16	6220	NA
SN74HC273N	N	PDIP	20	20	506	13.97	11230	4.32
SN74HC273N.A	N	PDIP	20	20	506	13.97	11230	4.32
SN74HC273NE4	N	PDIP	20	20	506	13.97	11230	4.32
SNJ54HC273FK	FK	LCCC	20	55	506.98	12.06	2030	NA
SNJ54HC273FK.A	FK	LCCC	20	55	506.98	12.06	2030	NA
SNJ54HC273W	W	CFP	20	25	506.98	26.16	6220	NA
SNJ54HC273W.A	W	CFP	20	25	506.98	26.16	6220	NA

W (R–GDFP–F20) CERAMIC DUAL FLATPACK

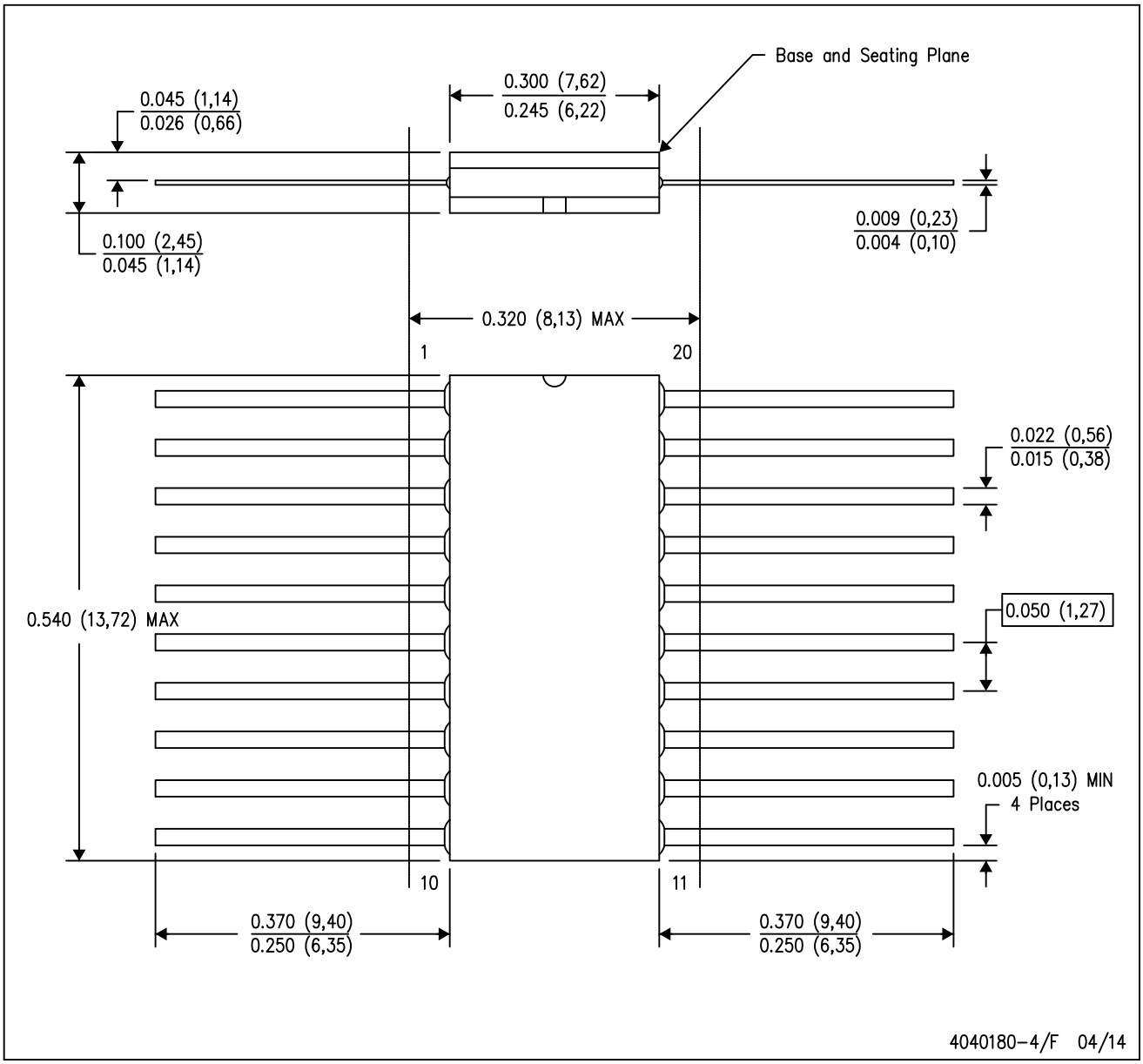

NOTES:
A. All linear dimensions are in inches (millimeters).
B. This drawing is subject to change without notice.
C. This package can be hermetically sealed with a ceramic lid using glass frit.
D. Index point is provided on cap for terminal identification only.
E. Falls within Mil–Std 1835 GDFP2–F20

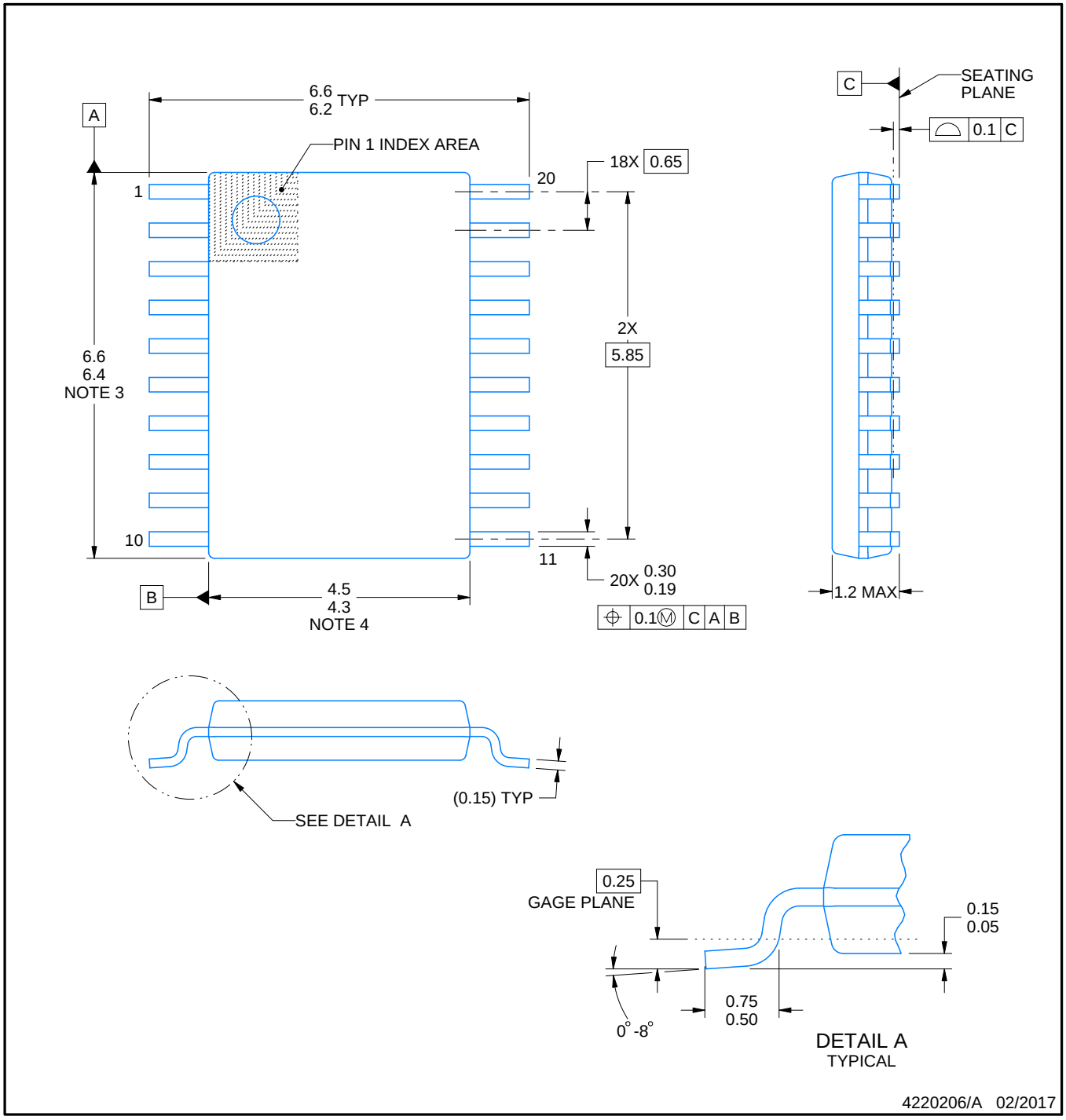

NOTES:

1. All linear dimensions are in millimeters. Any dimensions in parenthesis are for reference only. Dimensioning and tolerancing per ASME Y14.5M.
2. This drawing is subject to change without notice.
3. This dimension does not include mold flash, protrusions, or gate burrs. Mold flash, protrusions, or gate burrs shall not exceed 0.15 mm per side.
4. This dimension does not include interlead flash. Interlead flash shall not exceed 0.25 mm per side.
5. Reference JEDEC registration MO-153.

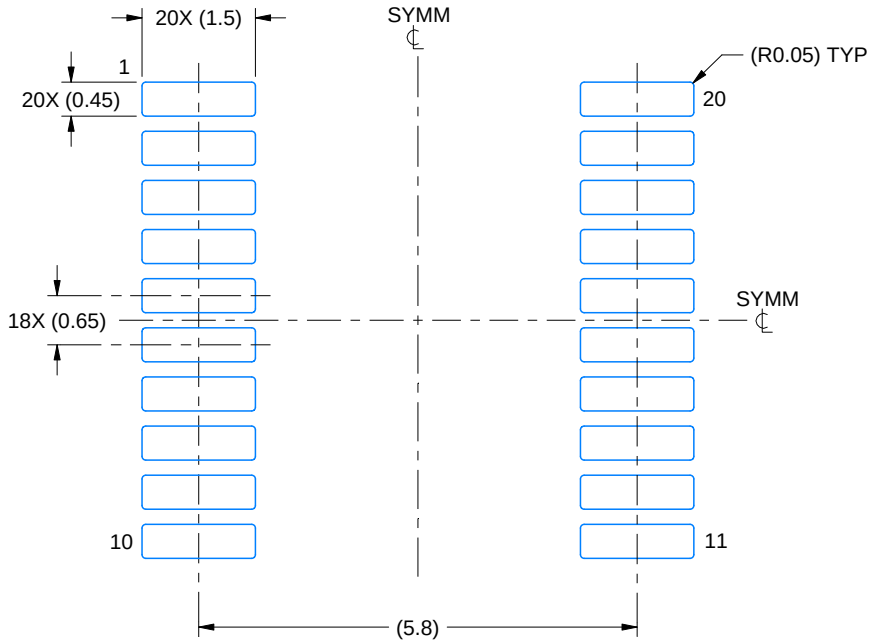

LAND PATTERN EXAMPLE
EXPOSED METAL SHOWN
SCALE: 10X

NON-SOLDER MASK DEFINED (PREFERRED)

SOLDER MASK DEFINED

SOLDER MASK DETAILS

4220206/A 02/2017

NOTES: (continued)

6. Publication IPC-7351 may have alternate designs.
7. Solder mask tolerances between and around signal pads can vary based on board fabrication site.

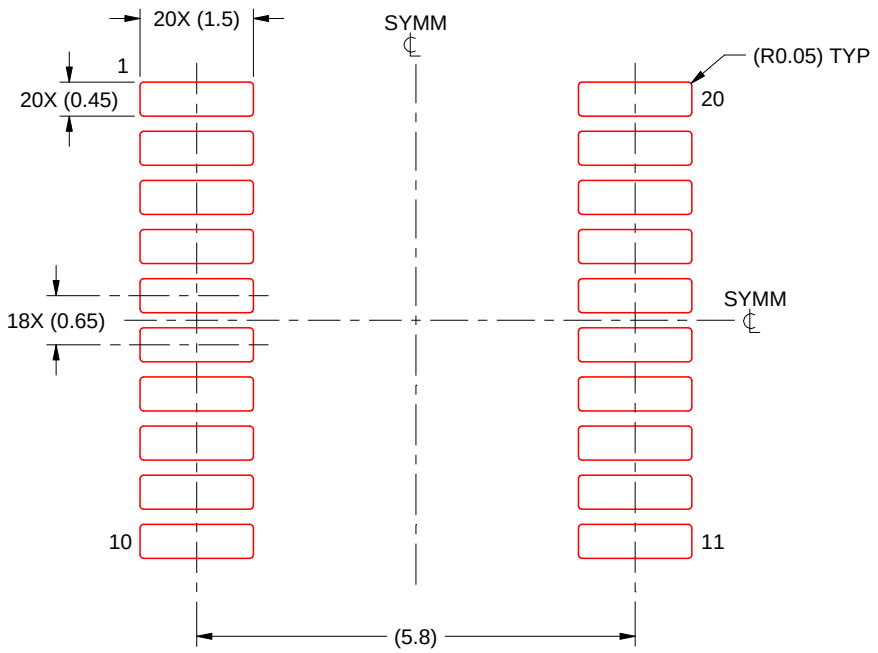

SOLDER PASTE EXAMPLE
BASED ON 0.125 mm THICK STENCIL
SCALE: 10X

4220206/A 02/2017

NOTES: (continued)

8. Laser cutting apertures with trapezoidal walls and rounded corners may offer better paste release. IPC-7525 may have alternate design recommendations.
9. Board assembly site may have different recommendations for stencil design.

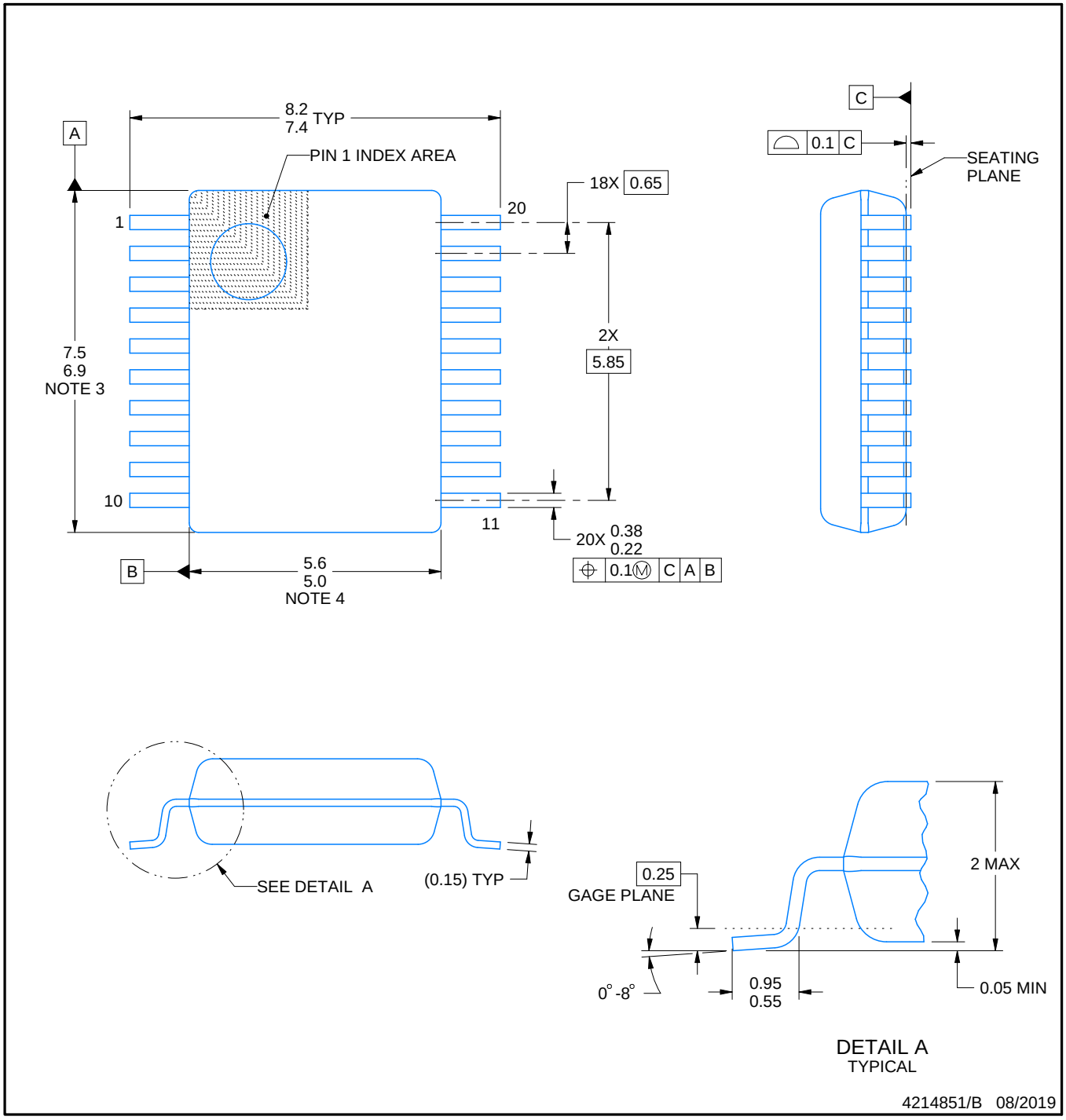

NOTES:

1. All linear dimensions are in millimeters. Any dimensions in parenthesis are for reference only. Dimensioning and tolerancing per ASME Y14.5M.
2. This drawing is subject to change without notice.
3. This dimension does not include mold flash, protrusions, or gate burrs. Mold flash, protrusions, or gate burrs shall not exceed 0.15 mm per side.
4. This dimension does not include interlead flash. Interlead flash shall not exceed 0.25 mm per side.
5. Reference JEDEC registration MO-150.

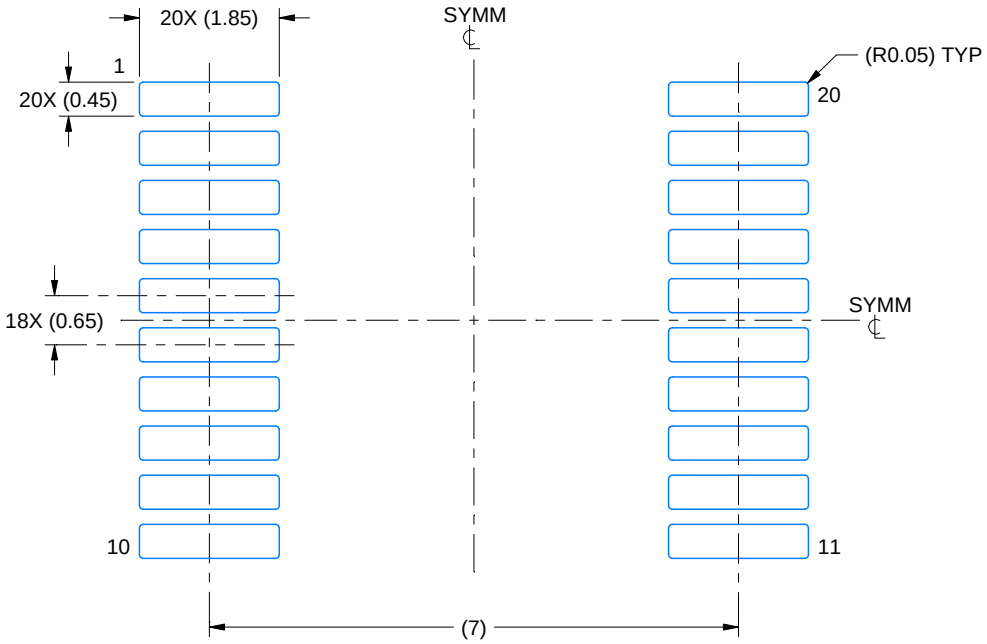

LAND PATTERN EXAMPLE
EXPOSED METAL SHOWN
SCALE: 10X

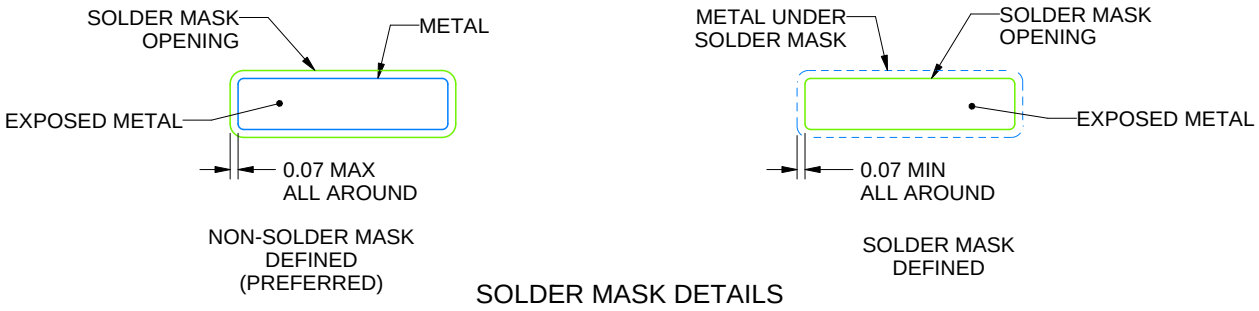

SOLDER MASK DETAILS

4214851/B 08/2019

NOTES: (continued)

6. Publication IPC-7351 may have alternate designs.
7. Solder mask tolerances between and around signal pads can vary based on board fabrication site.

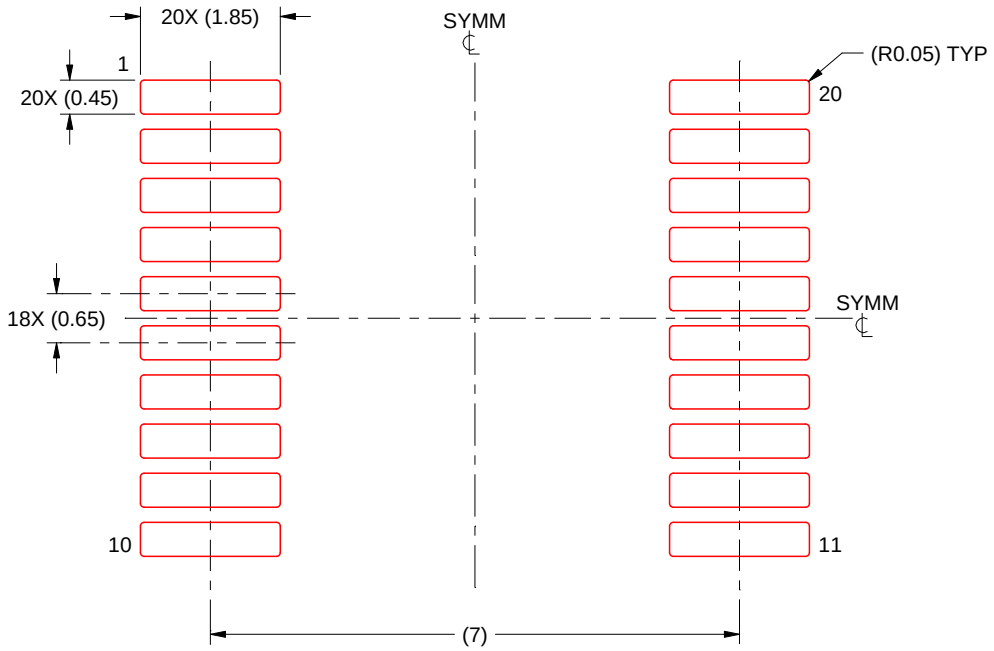

SOLDER PASTE EXAMPLE
BASED ON 0.125 mm THICK STENCIL
SCALE: 10X

4214851/B 08/2019

NOTES: (continued)

8. Laser cutting apertures with trapezoidal walls and rounded corners may offer better paste release. IPC-7525 may have alternate design recommendations.
9. Board assembly site may have different recommendations for stencil design.

MECHANICAL DATA

NS (R-PDSO-G)** **PLASTIC SMALL-OUTLINE PACKAGE**

14-PINS SHOWN

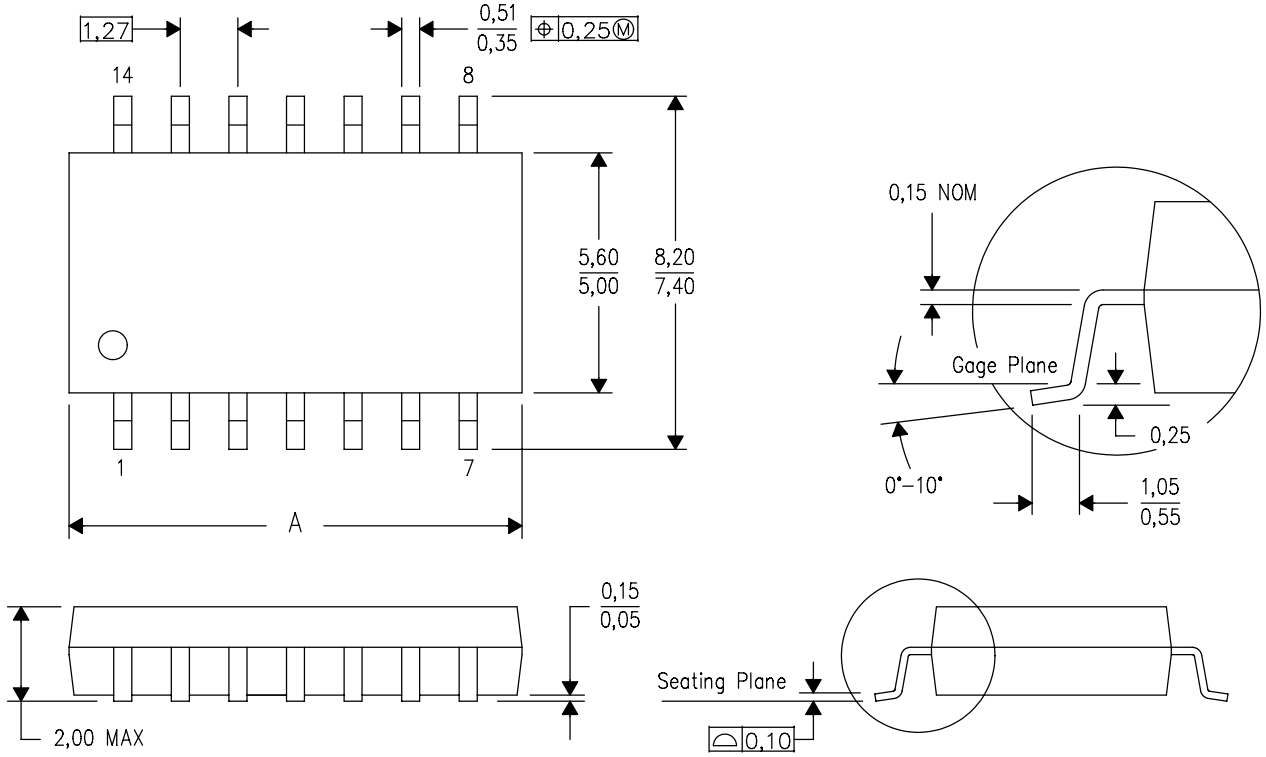

DIM \ PINS **	14	16	20	24
A MAX	10,50	10,50	12,90	15,30
A MIN	9,90	9,90	12,30	14,70

4040062/C 03/03

NOTES:
A. All linear dimensions are in millimeters.
B. This drawing is subject to change without notice.
C. Body dimensions do not include mold flash or protrusion, not to exceed 0,15.

J (R–GDIP–T**) CERAMIC DUAL IN–LINE PACKAGE

14 LEADS SHOWN

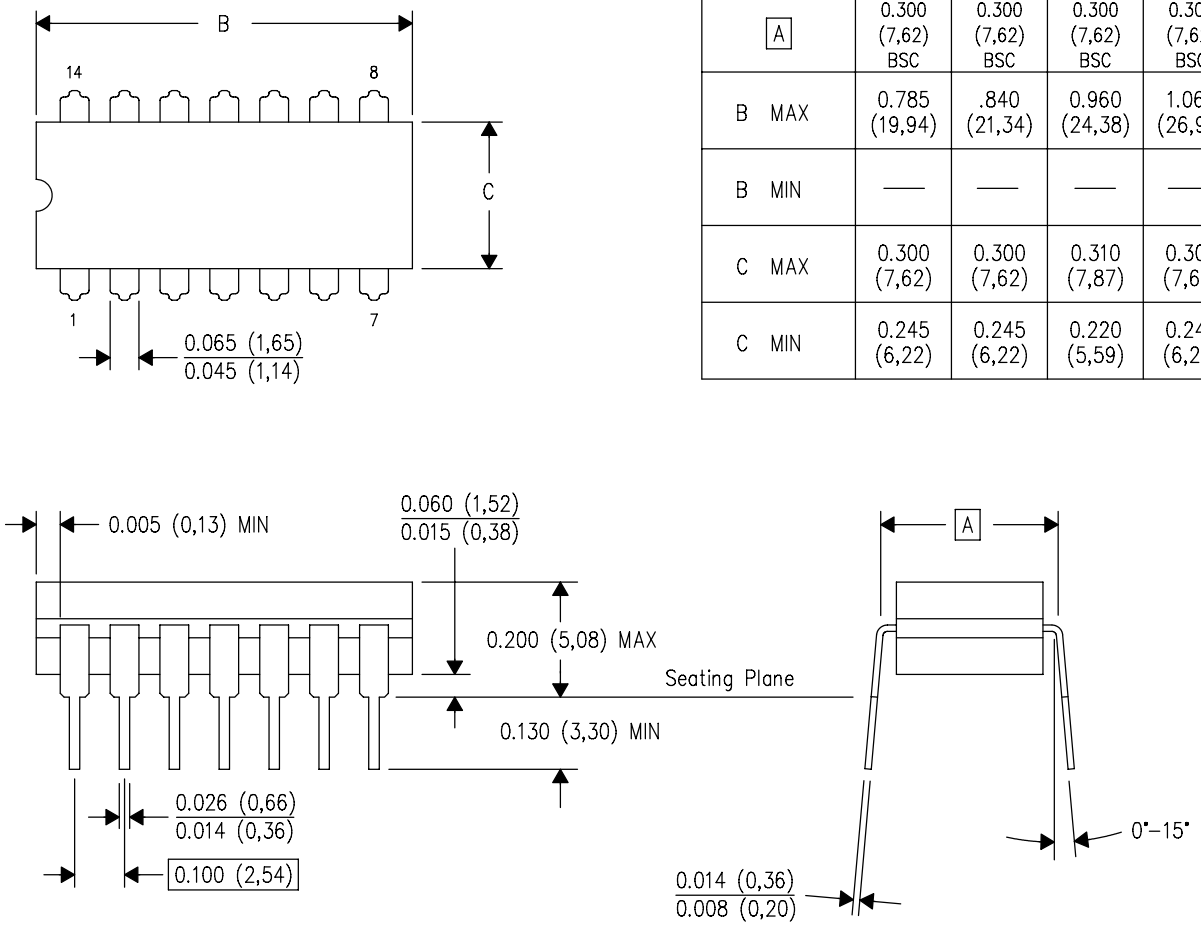

DIM \ PINS **	14	16	18	20
A	0.300 (7,62) BSC	0.300 (7,62) BSC	0.300 (7,62) BSC	0.300 (7,62) BSC
B MAX	0.785 (19,94)	.840 (21,34)	0.960 (24,38)	1.060 (26,92)
B MIN	—	—	—	—
C MAX	0.300 (7,62)	0.300 (7,62)	0.310 (7,87)	0.300 (7,62)
C MIN	0.245 (6,22)	0.245 (6,22)	0.220 (5,59)	0.245 (6,22)

4040083/F 03/03

NOTES:
- A. All linear dimensions are in inches (millimeters).
- B. This drawing is subject to change without notice.
- C. This package is hermetically sealed with a ceramic lid using glass frit.
- D. Index point is provided on cap for terminal identification only on press ceramic glass frit seal only.
- E. Falls within MIL STD 1835 GDIP1–T14, GDIP1–T16, GDIP1–T18 and GDIP1–T20.

GENERIC PACKAGE VIEW

FK 20

LCCC - 2.03 mm max height

8.89 x 8.89, 1.27 mm pitch

LEADLESS CERAMIC CHIP CARRIER

This image is a representation of the package family, actual package may vary.
Refer to the product data sheet for package details.

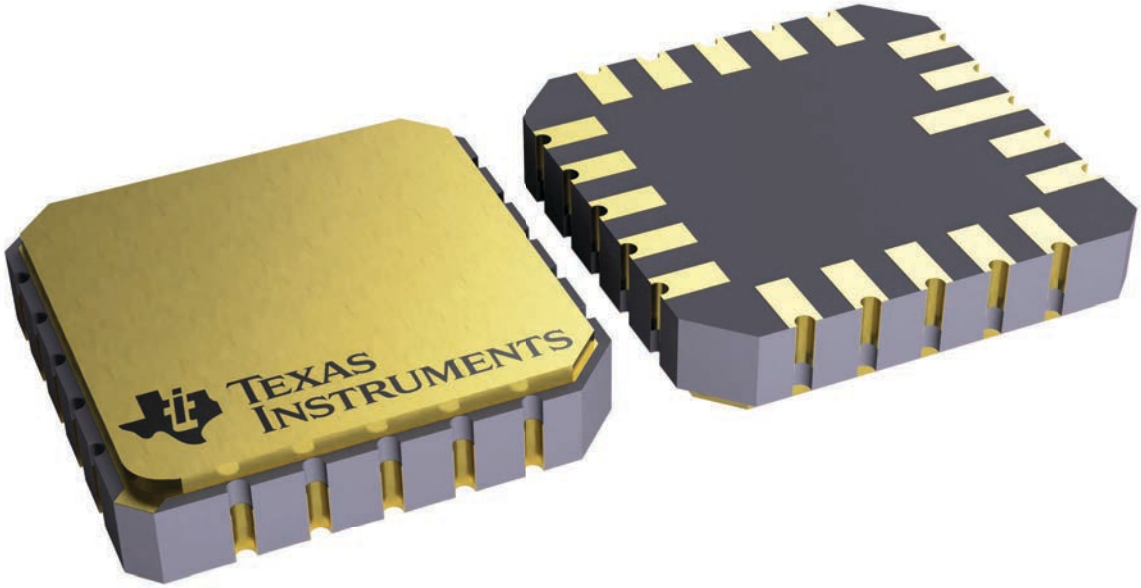

4229370VA\

N (R–PDIP–T**) PLASTIC DUAL–IN–LINE PACKAGE

16 PINS SHOWN

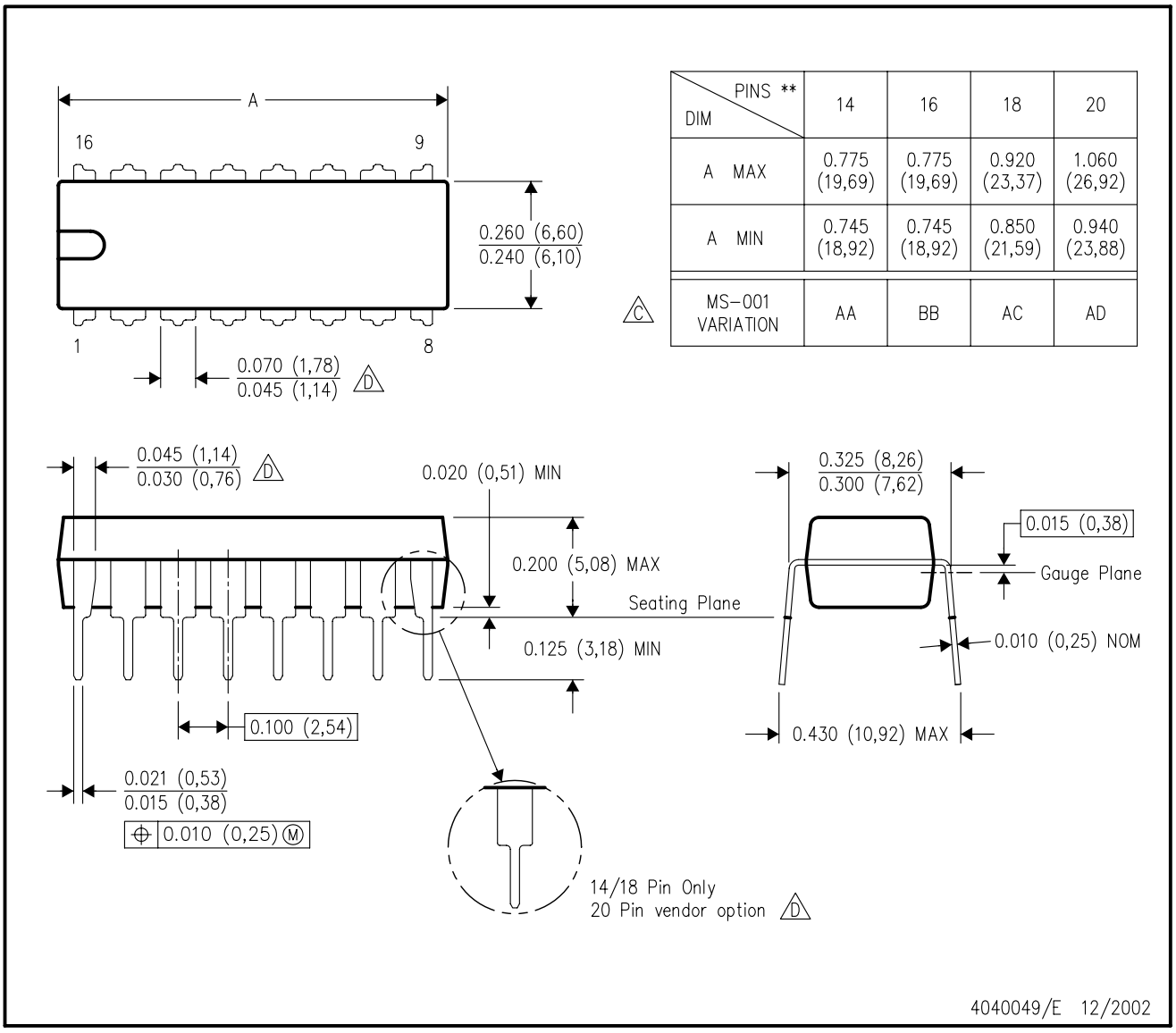

DIM \ PINS **	14	16	18	20
A MAX	0.775 (19,69)	0.775 (19,69)	0.920 (23,37)	1.060 (26,92)
A MIN	0.745 (18,92)	0.745 (18,92)	0.850 (21,59)	0.940 (23,88)
MS–001 VARIATION (C)	AA	BB	AC	AD

NOTES:
A. All linear dimensions are in inches (millimeters).
B. This drawing is subject to change without notice.
C. Falls within JEDEC MS–001, except 18 and 20 pin minimum body length (Dim A).
D. The 20 pin end lead shoulder width is a vendor option, either half or full width.

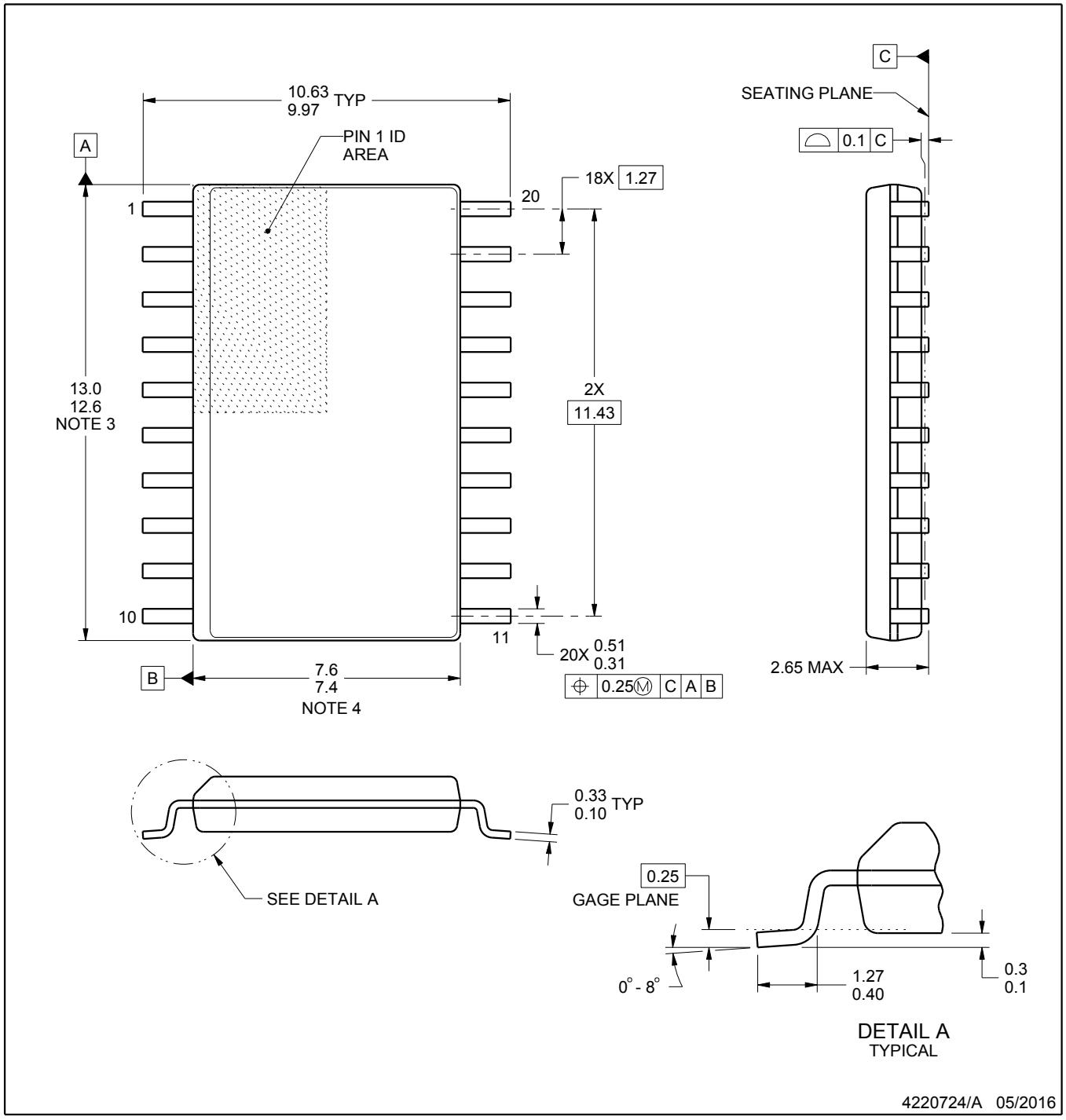

NOTES:

1. All linear dimensions are in millimeters. Dimensions in parenthesis are for reference only. Dimensioning and tolerancing per ASME Y14.5M.
2. This drawing is subject to change without notice.
3. This dimension does not include mold flash, protrusions, or gate burrs. Mold flash, protrusions, or gate burrs shall not exceed 0.15 mm per side.
4. This dimension does not include interlead flash. Interlead flash shall not exceed 0.43 mm per side.
5. Reference JEDEC registration MS-013.

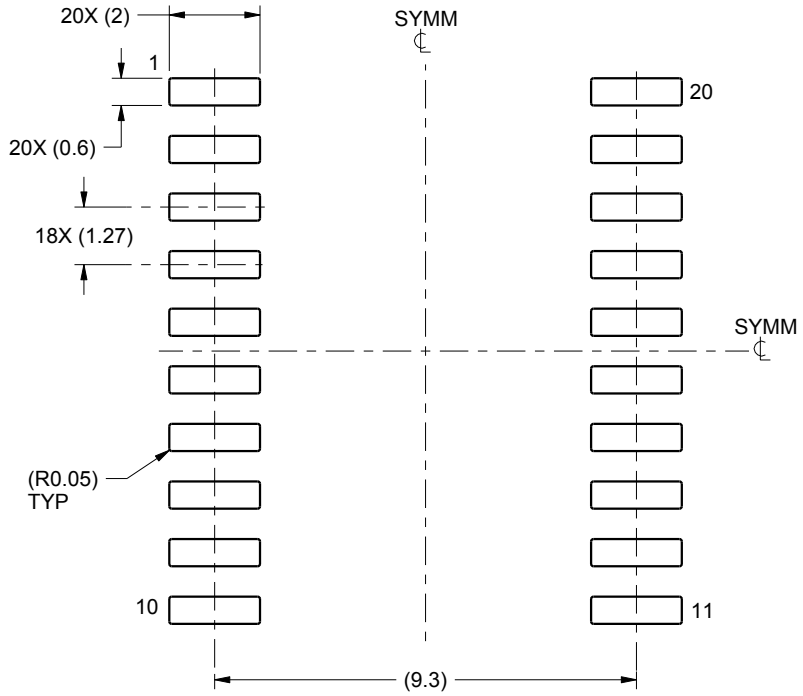

LAND PATTERN EXAMPLE
SCALE:6X

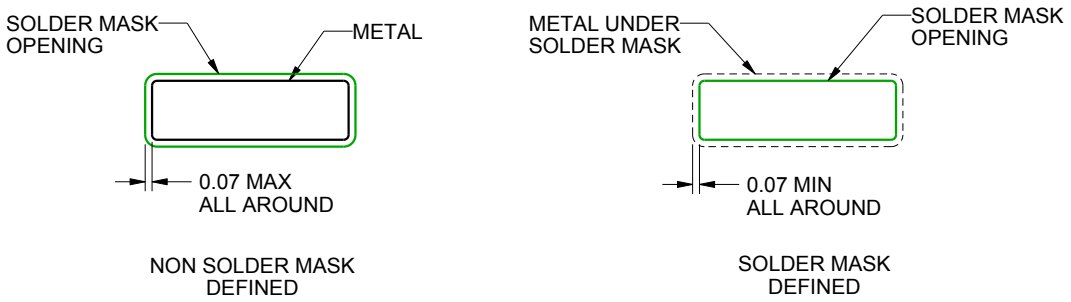

SOLDER MASK DETAILS

4220724/A 05/2016

NOTES: (continued)

6. Publication IPC-7351 may have alternate designs.
7. Solder mask tolerances between and around signal pads can vary based on board fabrication site.

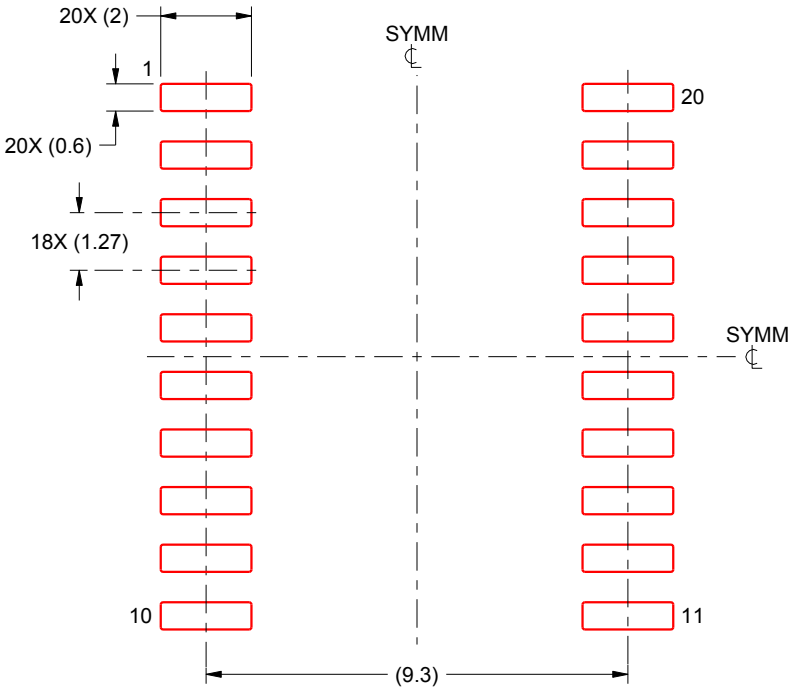

SOLDER PASTE EXAMPLE
BASED ON 0.125 mm THICK STENCIL
SCALE:6X

4220724/A 05/2016

NOTES: (continued)

8. Laser cutting apertures with trapezoidal walls and rounded corners may offer better paste release. IPC-7525 may have alternate design recommendations.
9. Board assembly site may have different recommendations for stencil design.

IMPORTANT NOTICE AND DISCLAIMER

TI PROVIDES TECHNICAL AND RELIABILITY DATA (INCLUDING DATA SHEETS), DESIGN RESOURCES (INCLUDING REFERENCE DESIGNS), APPLICATION OR OTHER DESIGN ADVICE, WEB TOOLS, SAFETY INFORMATION, AND OTHER RESOURCES “AS IS” AND WITH ALL FAULTS, AND DISCLAIMS ALL WARRANTIES, EXPRESS AND IMPLIED, INCLUDING WITHOUT LIMITATION ANY IMPLIED WARRANTIES OF MERCHANTABILITY, FITNESS FOR A PARTICULAR PURPOSE OR NON-INFRINGEMENT OF THIRD PARTY INTELLECTUAL PROPERTY RIGHTS.

These resources are intended for skilled developers designing with TI products. You are solely responsible for (1) selecting the appropriate TI products for your application, (2) designing, validating and testing your application, and (3) ensuring your application meets applicable standards, and any other safety, security, regulatory or other requirements.

These resources are subject to change without notice. TI grants you permission to use these resources only for development of an application that uses the TI products described in the resource. Other reproduction and display of these resources is prohibited. No license is granted to any other TI intellectual property right or to any third party intellectual property right. TI disclaims responsibility for, and you will fully indemnify TI and its representatives against, any claims, damages, costs, losses, and liabilities arising out of your use of these resources.

TI’s products are provided subject to TI’s Terms of Sale or other applicable terms available either on ti.com or provided in conjunction with such TI products. TI’s provision of these resources does not expand or otherwise alter TI’s applicable warranties or warranty disclaimers for TI products.

TI objects to and rejects any additional or different terms you may have proposed.

Mailing Address: Texas Instruments, Post Office Box 655303, Dallas, Texas 75265
Copyright © 2025, Texas Instruments Incorporated