DUAL NON-INVERTING POWER DRIVER

FEATURES

- **3.0A Peak Current Totem Pole Output**
- **5 to 35V Operation**
- **25ns Rise and Fall Times**
- **25ns Propagation Delays**
- **Thermal Shutdown and Under-Voltage Protection**
- **High-Speed, Power MOSFET Compatible**
- **Efficient High Frequency Operation**
- **Low Cross-Conduction Current Spike**
- **Enable and Shutdown Functions**
- **Wide Input Voltage Range**
- **ESD Protection to 2kV**

DESCRIPTION

The UC1708 family of power drivers is made with a high-speed, high-voltage, Schottky process to interface control functions and high-power switching devices – particularly power MOSFETs. Operating over a 5 V to 35 V supply range, these devices contain two independent channels. The A and B inputs are compatible with TTL and CMOS logic families, but can withstand input voltages as high as V_{IN}. Each output can source or sink up to 3 A as long as power dissipation limits are not exceeded.

Although each output can be activated independently with its own inputs, they can be forced low in common through the action of either a digital high signal at the Shutdown terminal or by forcing the Enable terminal low. The Shutdown terminal will only force the outputs low, it will not effect the behavior of the rest of the device. The Enable terminal effectively places the device in under-voltage lockout, reducing power consumption by as much as 90%. During under-voltage and disable (Enable terminal forced low) conditions, the outputs are held in a self-biasing, low-voltage, state.

The UC3708 and UC2708 are available in plastic 8-pin MINI DIP and 16-pin *bat-wing* DIP packages for commercial operation over a 0°C to 70°C temperature range and industrial temperature range of –25°C to 85°C respectively. For operation over a –55°C to 125°C temperature range, the UC1708 is available in hermetically sealed 8-pin MINI CDIP, 16 pin CDIP and 20 pin CLCC packages. Surface mount devices are also available.

BLOCK DIAGRAM

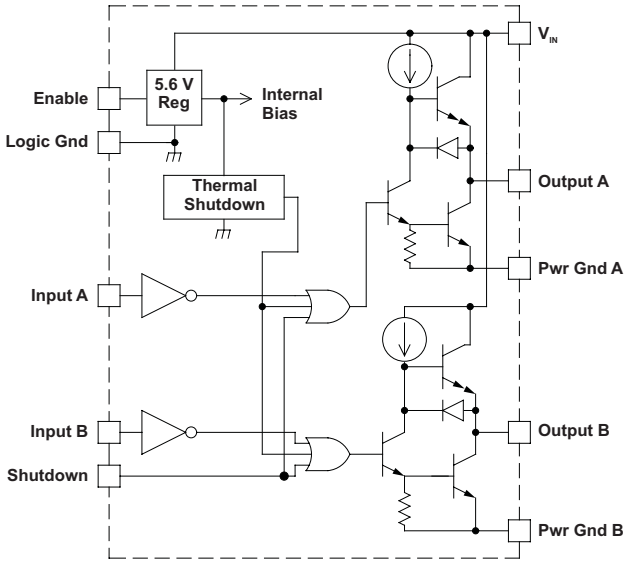

NOTE: Shutdown feature is not available in J or N packages only.

Please be aware that an important notice concerning availability, standard warranty, and use in critical applications of Texas Instruments semiconductor products and disclaimers thereto appears at the end of this data sheet.

PRODUCTION DATA information is current as of publication date. Products conform to specifications per the terms of the Texas Instruments standard warranty. Production processing does not necessarily include testing of all parameters.

Copyright © 1997–2007, Texas Instruments Incorporated

CONNECTION DIAGRAMS

DIL-8 (Top View)
J Or N Package

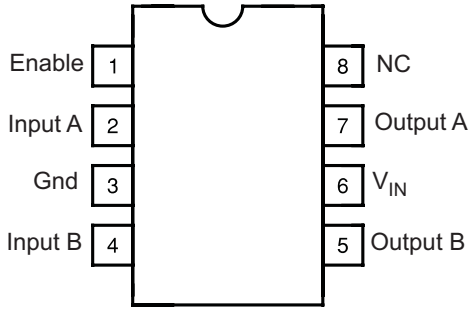

SOIC-16 (Top View)
DW Package

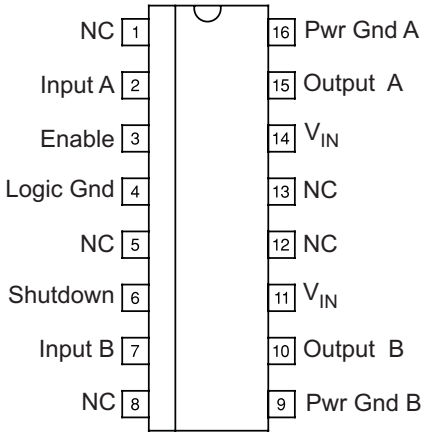

DIL-16 (Top View)
JE Or NE Package

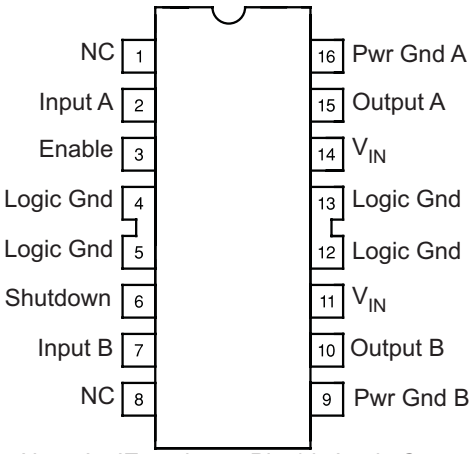

Note: In JE package, Pin 4 is Logic Ground.
Pins 5, 12, and 13 are no connect.

CLCC-20 (Top View)
L Package

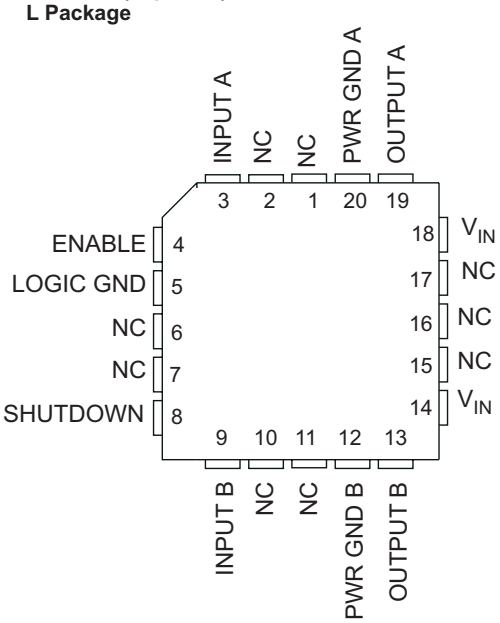

Copyright © 1997–2007, Texas Instruments Incorporated

ABSOLUTE MAXIMUM RATINGS(1)

		VALUE	UNIT
Supply Voltage, V_{IN}		35	V
Output Current (Each Output, Source or Sink)	Steady-State	0.5	A
	Peak Transient	3	A
Ouput Voltage		–0.3 to (V_{IN} + 0.3)	V
Enable and Shutdown Inputs		–0.3 to 6.2	V
A and B Inputs		–0.3 to (V_{IN} + 0.3)	V
Operating Junction Temperature(2)		150	°C
Storage Temperature Range		–65 to 150	°C
Lead Temperature (Soldering, 10 Seconds)		300	°C

(1) All voltages are with respect to Logic Gnd pin. All currents are positive into, negative out of, device terminals.r
(2) Consult Unitrode Integrated Circuits databook for information regarding thermal specifications and limitations of packages.

ELECTRICAL CHARACTERISTICS

Unless otherwise stated, V_{IN}=10V to 35V, and these specifications apply for: –55°C<T_A<125°C for the UC1708, –25°C<T_A<85°C for the UC2708, and 0°C<T_A<70°C for the UC3708, T_A = T_J

PARAMETER		TEST CONDITIONS	MIN	TYP	MAX	UNIT
V_{IN}	Supply current	Outputs low		18	26	mA
		Outputs high		14	18	
		Enable = 0 V		1	4	
	A, B and shutdown inputs low level				0.8	V
	A, B and shutdown inputs high level		2.0			V
	A, B Input current low	$V_{A,B}$ = 0.4V	–1	–0.6		mA
	A, B Input current high	$V_{A,B}$ = 2.4V	–200		50	A
	A, B Input leakage current high	$V_{A,B}$ = 35.3V			200	A
	Shutdown input current low	$V_{SHUTDOWN}$ = 0.4V		20	100	A
	Shutdown input current high	$V_{SHUTDOWN}$ = 2.4V		170	500	A
		$V_{SHUTDOWN}$ = 6.2V		0.6	1.5	mA
	Enable input current low	V_{ENABLE} = 0V	–600	–460	200	A
	Enable input current high	V_{ENABLE} = 6.2V			200	A
	Enable threshold rising			2.8	3.6	V
	Enable threshold falling		1.0	2.4	3.4	V
V_{IN} – V_{OUT}	Output High Saturation	I_{OUT} = –50mA			2.0	V
		I_{OUT} = –500mA			2.5	V
V_{OUT}	Output Low Saturation	I_{OUT} = 50mA			0.5	V
		I_{OUT} = 500mA			2.5	V
	Thermal Shutdown			155		°C

Copyright © 1997–2007, Texas Instruments Incorporated

SWITCHING CHARACTERISTICS (see Figure 1)

(VIN = 20V, delays measured to 10% output change.)

PARAMETER	TEST CONDITIONS		MIN	TYP	MAX	UNIT
FROM A,B INPUT TO OUTPUT:						
Rise Time Delay (TPLH)	CL = 0pF			25	40	ns
	CL = 1000pF	UC1708		25	45	ns
		UC2708/UC3708		25	40	
	CL = 2200pF	UC1708		25	50	ns
		UC2708/UC3708		25	45	
10% to 90% Rise (TTLH)	CL = 0pF			55	75	ns
	CL = 1000pF(1)	UC1708		25	80	ns
		UC2708/UC3708		25	50	
	CL = 2200pF	UC1708		40	85	ns
		UC2708/UC3708		40	55	
Fall Time Delay (TPHL)	CL = 0pF			25	40	ns
	CL = 1000pF(1)			25	45	
	CL = 2200pF			35	50	
90% to 10% Fall (TTHL)	CL = 0pF			15	20	ns
	CL = 1000pF(1)			25	45	
	CL = 2200pF			40	55	

(1) These parameters, specified at 1000pF, although ensured over recommended operating conditions, are not tested in production.

SWITCHING CHARACTERISTICS (see Figure 1)

(VIN = 20V, delays measured to 10% output change.)

PARAMETER	TEST CONDITIONS		MIN	TYP	MAX	UNIT
FROM SHUTDOWN INPUT TO OUTPUT:						
Rise Time Delay (TPLH)	CL = 0pF			25	75	ns
	CL = 1000pF(1)	UC1708		30	80	ns
		UC2708/UC3708		30	75	
	CL = 2200pF	UC1708		35	85	ns
		UC2708/UC3708		35	75	
10% to 90% Rise (TTLH)	CL = 0pF			50	75	ns
	CL = 1000pF(1)	UC1708		25	80	ns
		UC2708/UC3708		25	50	
	CL = 2200pF	UC1708		40	85	ns
		UC2708/UC3708		40	55	
Fall Time Delay (TPHL)	CL = 0pF			25	45	ns
	CL = 1000pF(1)			30	50	
	CL = 2200pF			35	55	
90% to 10% Fall (TTHL)	CL = 0pF			25	20	ns
	CL = 1000pF(1)			25	45	
	CL = 2200pF			40	55	
Total Supply Current	F = 200kHz, 50% duty cycle, both channels; CL = 0pF			23	25	mA
	F = 200kHz, 50% duty cycle, both channels; CL = 2200pF			38	45	

(1) These parameters, specified at 1000pF, although ensured over recommended operating conditions, are not tested in production.

Copyright © 1997–2007, Texas Instruments Incorporated

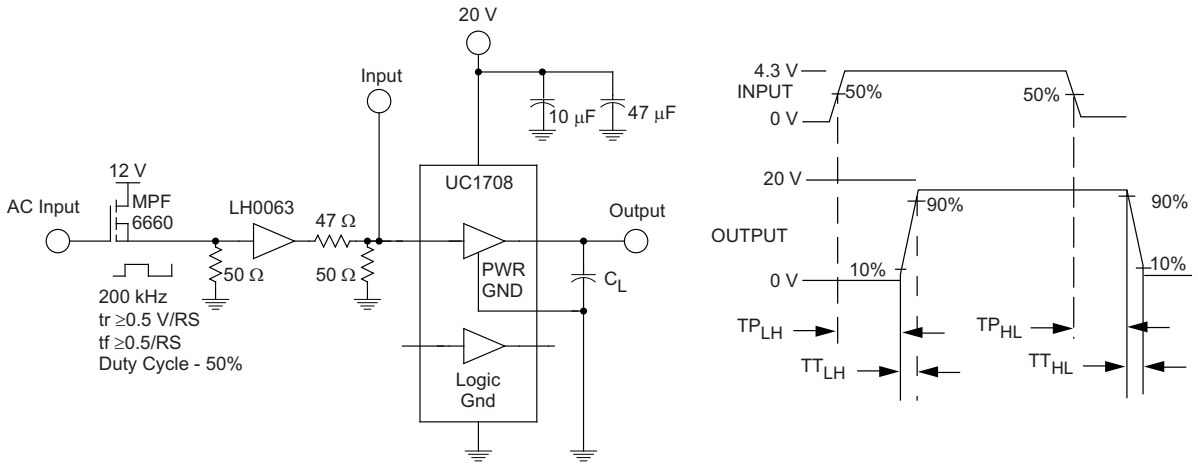

Figure 1. AC Test Circuit and Switching Time Waveforms

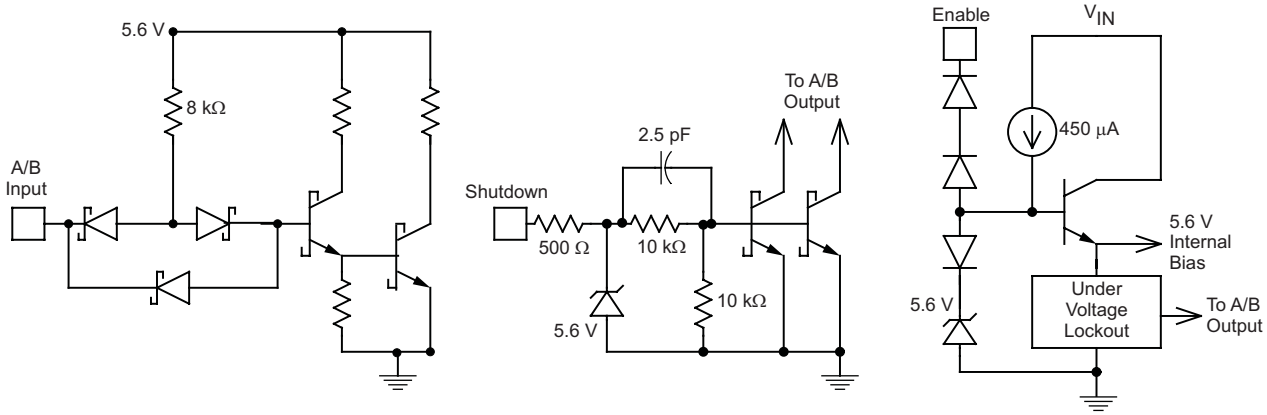

NOTE: Shutdown feature available only in JE, NE or DW Packages.

Figure 2. Equivalent Input Circuits

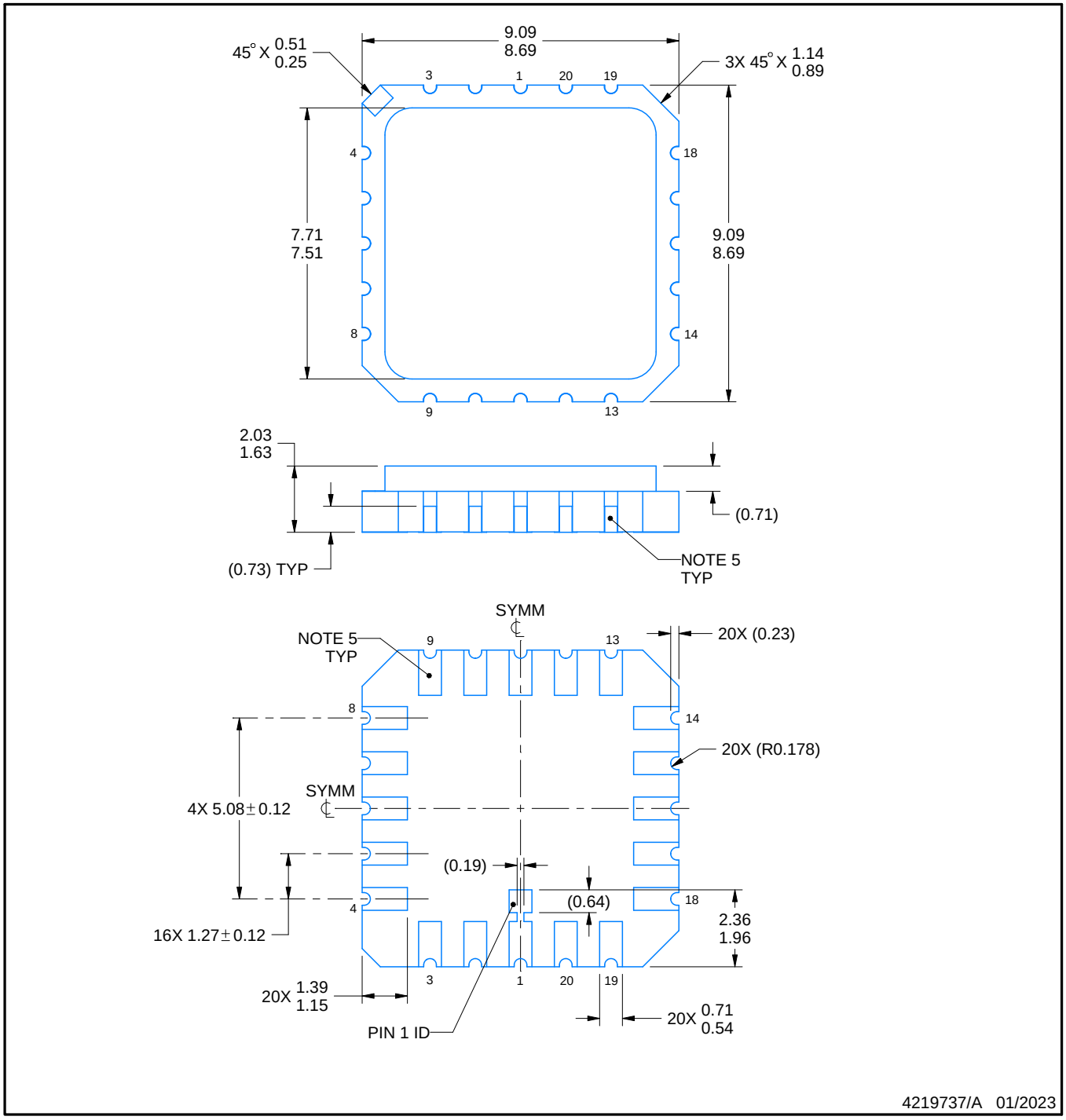

NOTES:

1. All linear dimensions are in millimeters. Any dimensions in parenthesis are for reference only. Dimensioning and tolerancing per ASME Y14.5M.
2. This drawing is subject to change without notice.
3. This package can be hermetically sealed with a metal lid.
4. Reference JEDEC Registration MS-004.
5. The terminals are gold-plated.

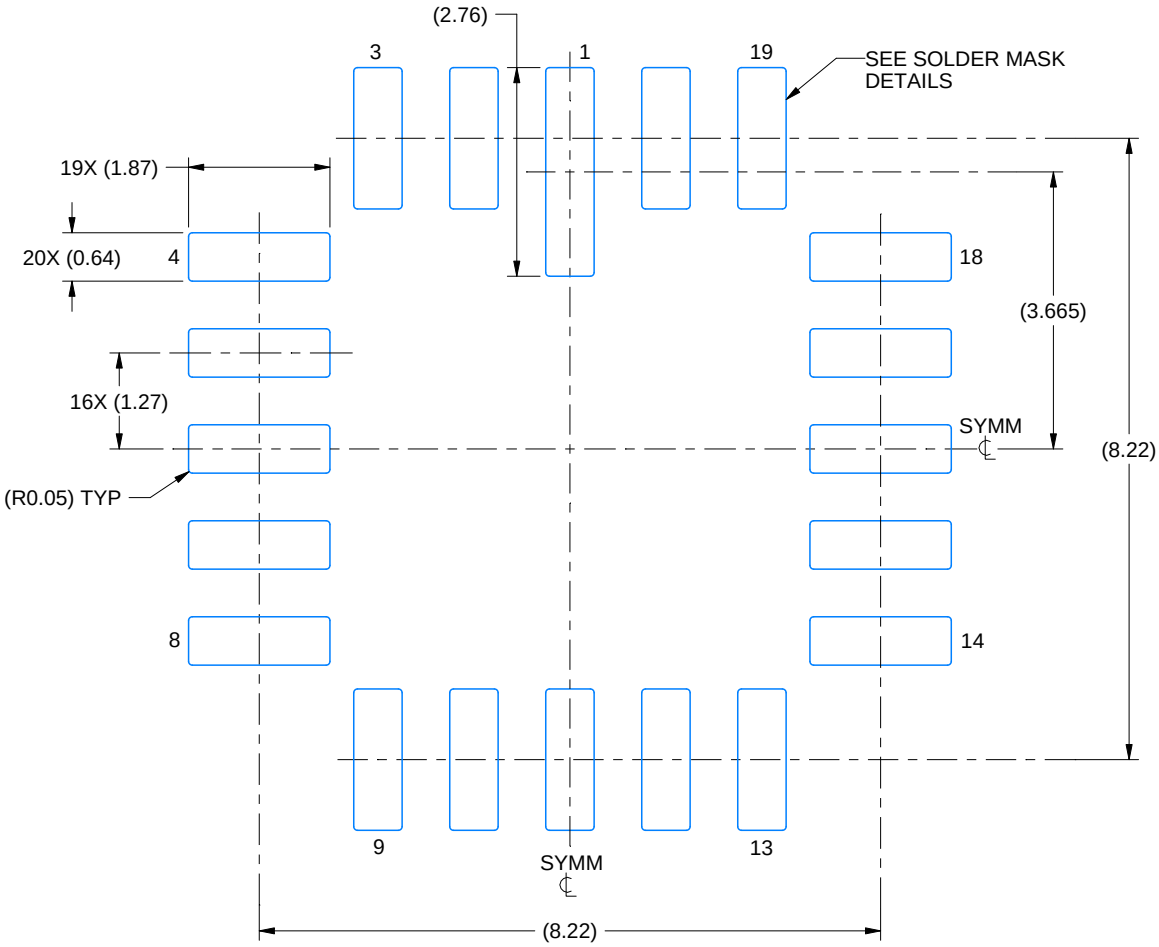

LAND PATTERN EXAMPLE
EXPOSED METAL SHOWN
SCALE: 10X

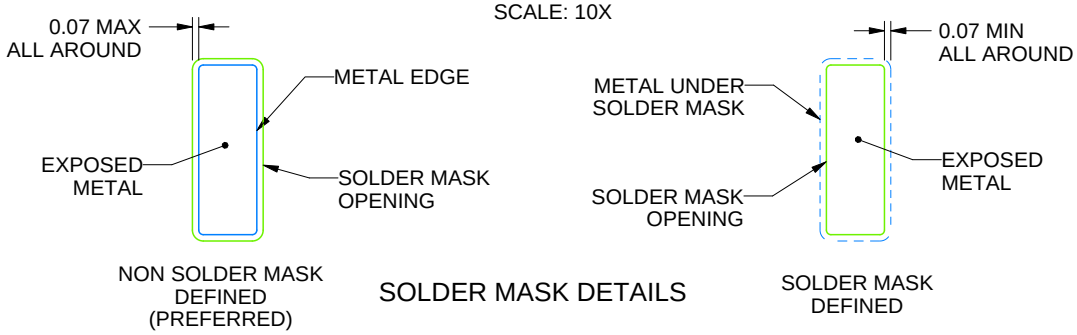

SOLDER MASK DETAILS

4219737/A 01/2023

NOTES: (continued)

6. For more information, see Texas Instruments literature number SLUA271 (www.ti.com/lit/slua271).

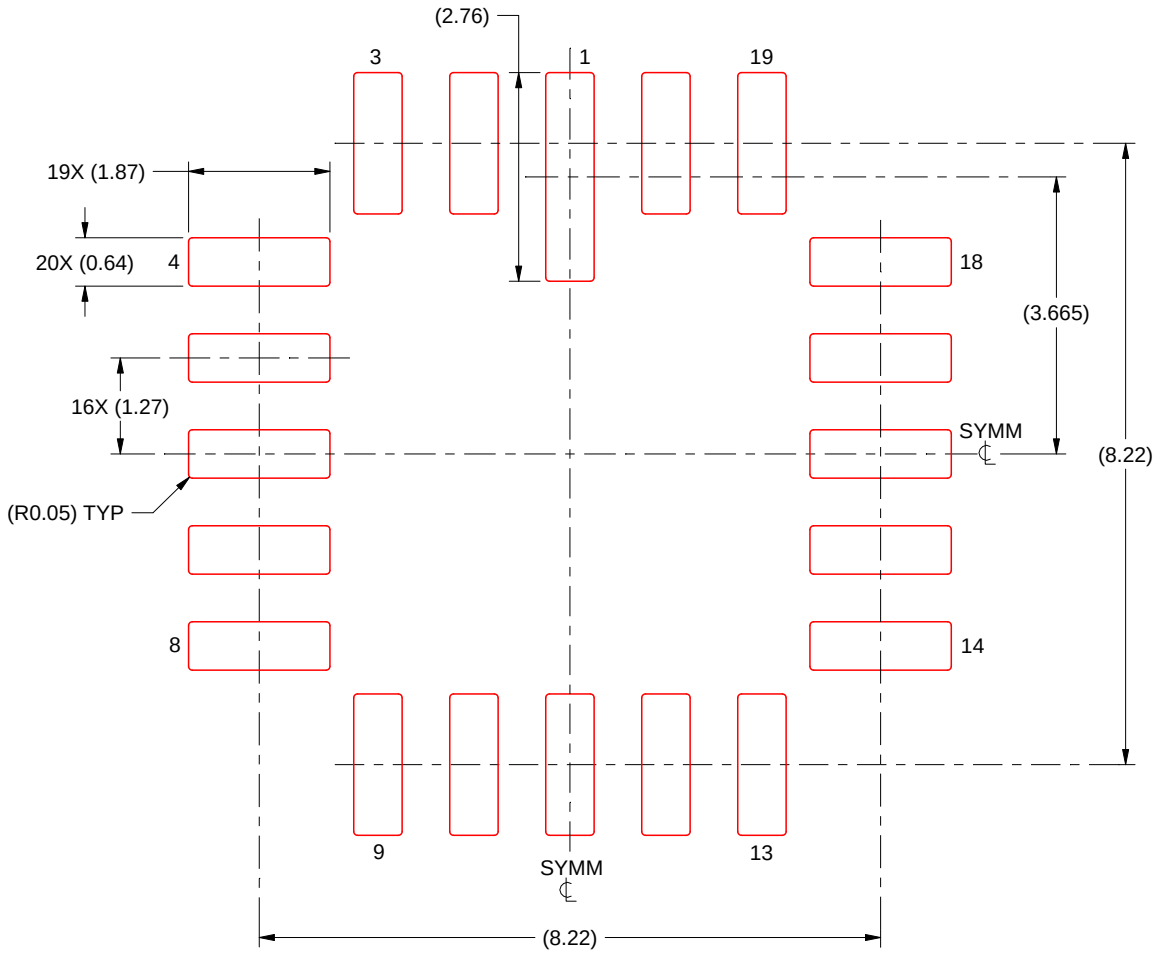

SOLDER PASTE EXAMPLE
BASED ON 0.125 mm TICK STENCIL
SCALE: 10X

4219737/A 01/2023

NOTES: (continued)

7. Laser cutting apertures with trapezoidal walls and rounded corners may offer better paste release. IPC-7525 may have alternate design recommendations.

PACKAGING INFORMATION

Orderable part number	Status (1)	Material type (2)	Package | Pins	Package qty | Carrier	RoHS (3)	Lead finish/ Ball material (4)	MSL rating/ Peak reflow (5)	Op temp (°C)	Part marking (6)
5962-0051401Q2A	Active	Production	LCCC (FK) | 20	55 | TUBE	No	SNPB	N/A for Pkg Type	-55 to 125	5962-0051401Q2A UC1708L/ 883B
5962-0051401QEA	Active	Production	CDIP (J) | 16	25 | TUBE	No	SNPB	N/A for Pkg Type	-55 to 125	5962-0051401QEA UC1708JE/883B
5962-0051401QPA	Active	Production	CDIP (JG) | 8	50 | TUBE	No	SNPB	N/A for Pkg Type	-55 to 125	0051401QPA UC1708
5962-0051401V2A	Active	Production	LCCC (FK) | 20	55 | TUBE	No	SNPB	N/A for Pkg Type	-55 to 125	5962-0051401V2A UC1708L QMLV
5962-0051401V2A.A	Active	Production	LCCC (FK) | 20	55 | TUBE	No	SNPB	N/A for Pkg Type	-55 to 125	5962-0051401V2A UC1708L QMLV
5962-0051401VEA	Active	Production	CDIP (J) | 16	25 | TUBE	No	SNPB	N/A for Pkg Type	-55 to 125	5962-0051401VEA UC1708JEQMLV
5962-0051401VEA.A	Active	Production	CDIP (J) | 16	25 | TUBE	No	SNPB	N/A for Pkg Type	-55 to 125	5962-0051401VEA UC1708JEQMLV
5962-0051401VPA	Active	Production	CDIP (JG) | 8	50 | TUBE	No	SNPB	N/A for Pkg Type	-55 to 125	0051401VPA UC1708
5962-0051401VPA.A	Active	Production	CDIP (JG) | 8	50 | TUBE	No	SNPB	N/A for Pkg Type	-55 to 125	0051401VPA UC1708
UC1708J	Active	Production	CDIP (JG) | 8	50 | TUBE	No	SNPB	N/A for Pkg Type	-55 to 125	UC1708J
UC1708J.A	Active	Production	CDIP (JG) | 8	50 | TUBE	No	SNPB	N/A for Pkg Type	-55 to 125	UC1708J
UC1708J883B	Active	Production	CDIP (JG) | 8	50 | TUBE	No	SNPB	N/A for Pkg Type	-55 to 125	0051401QPA UC1708
UC1708J883B.A	Active	Production	CDIP (JG) | 8	50 | TUBE	No	SNPB	N/A for Pkg Type	-55 to 125	0051401QPA UC1708
UC1708JE	Active	Production	CDIP (J) | 16	25 | TUBE	No	SNPB	N/A for Pkg Type	-55 to 125	UC1708JE

Orderable part number	Status (1)	Material type (2)	Package | Pins	Package qty | Carrier	RoHS (3)	Lead finish/ Ball material (4)	MSL rating/ Peak reflow (5)	Op temp (°C)	Part marking (6)
UC1708JE.A	Active	Production	CDIP (J) | 16	25 | TUBE	No	SNPB	N/A for Pkg Type	-55 to 125	UC1708JE
UC1708JE883B	Active	Production	CDIP (J) | 16	25 | TUBE	No	SNPB	N/A for Pkg Type	-55 to 125	5962-0051401QE A UC1708JE/883B
UC1708JE883B.A	Active	Production	CDIP (J) | 16	25 | TUBE	No	SNPB	N/A for Pkg Type	-55 to 125	5962-0051401QE A UC1708JE/883B
UC1708L883B	Active	Production	LCCC (FK) | 20	55 | TUBE	No	SNPB	N/A for Pkg Type	-55 to 125	5962-0051401Q2A UC1708L/ 883B
UC1708L883B.A	Active	Production	LCCC (FK) | 20	55 | TUBE	No	SNPB	N/A for Pkg Type	-55 to 125	5962-0051401Q2A UC1708L/ 883B
UC2708DW	Active	Production	SOIC (DW) | 16	40 | TUBE	Yes	NIPDAU	Level-2-260C-1 YEAR	-40 to 85	UC2708DW
UC2708DW.A	Active	Production	SOIC (DW) | 16	40 | TUBE	Yes	NIPDAU	Level-2-260C-1 YEAR	-40 to 85	UC2708DW
UC2708DWTR	Active	Production	SOIC (DW) | 16	2000 | LARGE T&R	Yes	NIPDAU	Level-2-260C-1 YEAR	-40 to 85	UC2708DW
UC2708DWTR.A	Active	Production	SOIC (DW) | 16	2000 | LARGE T&R	Yes	NIPDAU	Level-2-260C-1 YEAR	-40 to 85	UC2708DW
UC2708N	Active	Production	PDIP (P) | 8	50 | TUBE	Yes	NIPDAU	N/A for Pkg Type	-40 to 85	UC2708N
UC2708N.A	Active	Production	PDIP (P) | 8	50 | TUBE	Yes	NIPDAU	N/A for Pkg Type	-40 to 85	UC2708N
UC3708DW	Active	Production	SOIC (DW) | 16	40 | TUBE	Yes	NIPDAU	Level-2-260C-1 YEAR	0 to 70	UC3708DW
UC3708DW.A	Active	Production	SOIC (DW) | 16	40 | TUBE	Yes	NIPDAU	Level-2-260C-1 YEAR	0 to 70	UC3708DW
UC3708DWG4	Active	Production	SOIC (DW) | 16	40 | TUBE	Yes	NIPDAU	Level-2-260C-1 YEAR	0 to 70	UC3708DW
UC3708DWTR	Active	Production	SOIC (DW) | 16	2000 | LARGE T&R	Yes	NIPDAU	Level-2-260C-1 YEAR	0 to 70	UC3708DW
UC3708DWTR.A	Active	Production	SOIC (DW) | 16	2000 | LARGE T&R	Yes	NIPDAU	Level-2-260C-1 YEAR	0 to 70	UC3708DW
UC3708N	Active	Production	PDIP (P) | 8	50 | TUBE	Yes	NIPDAU	N/A for Pkg Type	0 to 70	UC3708N
UC3708N.A	Active	Production	PDIP (P) | 8	50 | TUBE	Yes	NIPDAU	N/A for Pkg Type	0 to 70	UC3708N
UC3708NE	Active	Production	PDIP (N) | 16	25 | TUBE	Yes	NIPDAU	N/A for Pkg Type	0 to 70	UC3708NE
UC3708NE.A	Active	Production	PDIP (N) | 16	25 | TUBE	Yes	NIPDAU	N/A for Pkg Type	0 to 70	UC3708NE
UC3708NG4	Active	Production	PDIP (P) | 8	50 | TUBE	Yes	NIPDAU	N/A for Pkg Type	0 to 70	UC3708N

(1) **Status:** For more details on status, see our product life cycle.

(2) **Material type:** When designated, preproduction parts are prototypes/experimental devices, and are not yet approved or released for full production. Testing and final process, including without limitation quality assurance, reliability performance testing, and/or process qualification, may not yet be complete, and this item is subject to further changes or possible discontinuation. If available for ordering, purchases will be subject to an additional waiver at checkout, and are intended for early internal evaluation purposes only. These items are sold without warranties of any kind.

(3) **RoHS values:** Yes, No, RoHS Exempt. See the TI RoHS Statement for additional information and value definition.

(4) **Lead finish/Ball material:** Parts may have multiple material finish options. Finish options are separated by a vertical ruled line. Lead finish/Ball material values may wrap to two lines if the finish value exceeds the maximum column width.

(5) **MSL rating/Peak reflow:** The moisture sensitivity level ratings and peak solder (reflow) temperatures. In the event that a part has multiple moisture sensitivity ratings, only the lowest level per JEDEC standards is shown. Refer to the shipping label for the actual reflow temperature that will be used to mount the part to the printed circuit board.

(6) **Part marking:** There may be an additional marking, which relates to the logo, the lot trace code information, or the environmental category of the part.

Multiple part markings will be inside parentheses. Only one part marking contained in parentheses and separated by a "~" will appear on a part. If a line is indented then it is a continuation of the previous line and the two combined represent the entire part marking for that device.

Important Information and Disclaimer: The information provided on this page represents TI's knowledge and belief as of the date that it is provided. TI bases its knowledge and belief on information provided by third parties, and makes no representation or warranty as to the accuracy of such information. Efforts are underway to better integrate information from third parties. TI has taken and continues to take reasonable steps to provide representative and accurate information but may not have conducted destructive testing or chemical analysis on incoming materials and chemicals. TI and TI suppliers consider certain information to be proprietary, and thus CAS numbers and other limited information may not be available for release.

In no event shall TI's liability arising out of such information exceed the total purchase price of the TI part(s) at issue in this document sold by TI to Customer on an annual basis.

OTHER QUALIFIED VERSIONS OF UC1708, UC1708-SP, UC3708 :

- Catalog : UC3708, UC1708
- Military : UC1708
- Space : UC1708-SP

NOTE: Qualified Version Definitions:

- Catalog - TI's standard catalog product
- Military - QML certified for Military and Defense Applications

- Space - Radiation tolerant, ceramic packaging and qualified for use in Space-based application

TAPE AND REEL INFORMATION

REEL DIMENSIONS

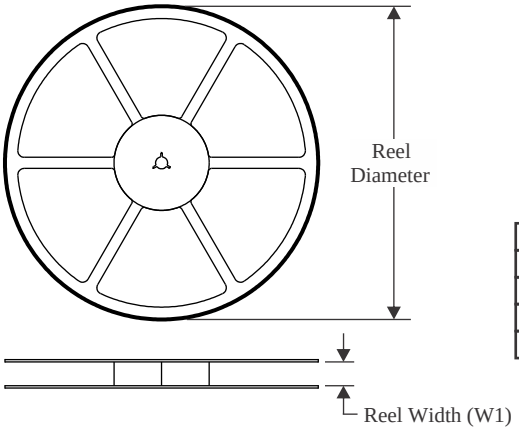

TAPE DIMENSIONS

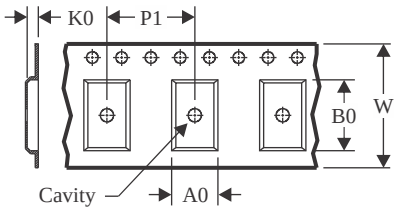

A0	Dimension designed to accommodate the component width
B0	Dimension designed to accommodate the component length
K0	Dimension designed to accommodate the component thickness
W	Overall width of the carrier tape
P1	Pitch between successive cavity centers

QUADRANT ASSIGNMENTS FOR PIN 1 ORIENTATION IN TAPE

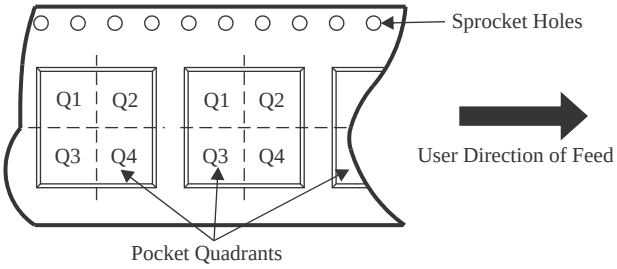

*All dimensions are nominal

Device	Package Type	Package Drawing	Pins	SPQ	Reel Diameter (mm)	Reel Width W1 (mm)	A0 (mm)	B0 (mm)	K0 (mm)	P1 (mm)	W (mm)	Pin1 Quadrant
UC2708DWTR	SOIC	DW	16	2000	330.0	16.4	10.75	10.7	2.7	12.0	16.0	Q1
UC3708DWTR	SOIC	DW	16	2000	330.0	16.4	10.75	10.7	2.7	12.0	16.0	Q1

TAPE AND REEL BOX DIMENSIONS

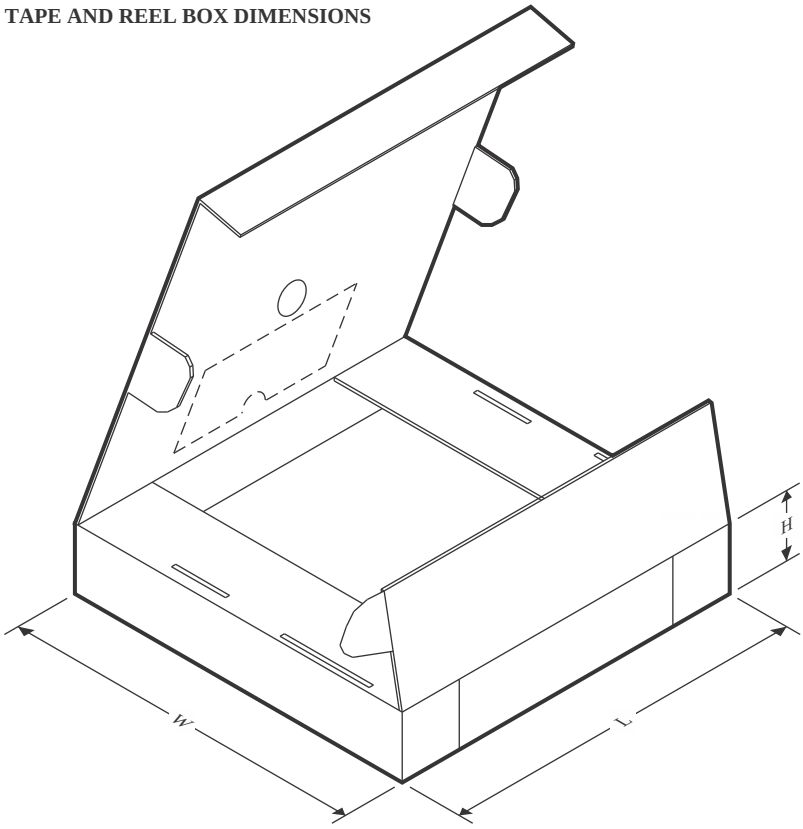

*All dimensions are nominal

Device	Package Type	Package Drawing	Pins	SPQ	Length (mm)	Width (mm)	Height (mm)
UC2708DWTR	SOIC	DW	16	2000	356.0	356.0	35.0
UC3708DWTR	SOIC	DW	16	2000	356.0	356.0	35.0

TUBE

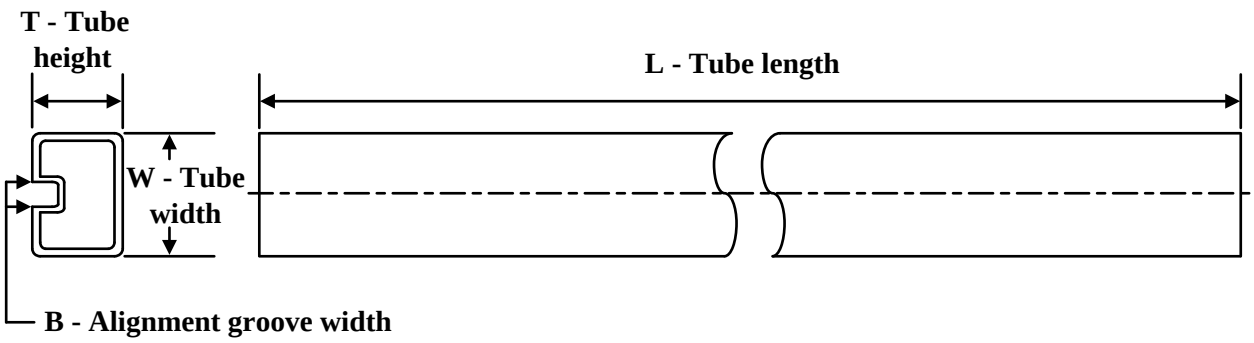

*All dimensions are nominal

Device	Package Name	Package Type	Pins	SPQ	L (mm)	W (mm)	T (µm)	B (mm)
5962-0051401Q2A	FK	LCCC	20	55	506.98	12.06	2030	NA
5962-0051401V2A	FK	LCCC	20	55	506.98	12.06	2030	NA
5962-0051401V2A.A	FK	LCCC	20	55	506.98	12.06	2030	NA
UC1708L883B	FK	LCCC	20	55	506.98	12.06	2030	NA
UC1708L883B.A	FK	LCCC	20	55	506.98	12.06	2030	NA
UC2708DW	DW	SOIC	16	40	507	12.83	5080	6.6
UC2708DW.A	DW	SOIC	16	40	507	12.83	5080	6.6
UC2708N	P	PDIP	8	50	506	13.97	11230	4.32
UC2708N.A	P	PDIP	8	50	506	13.97	11230	4.32
UC3708DW	DW	SOIC	16	40	507	12.83	5080	6.6
UC3708DW.A	DW	SOIC	16	40	507	12.83	5080	6.6
UC3708DWG4	DW	SOIC	16	40	507	12.83	5080	6.6
UC3708N	P	PDIP	8	50	506	13.97	11230	4.32
UC3708N.A	P	PDIP	8	50	506	13.97	11230	4.32
UC3708NE	N	PDIP	16	25	506	13.97	11230	4.32
UC3708NE.A	N	PDIP	16	25	506	13.97	11230	4.32
UC3708NG4	P	PDIP	8	50	506	13.97	11230	4.32

JG0008A

CDIP - 5.08 mm max height

CERAMIC DUAL IN-LINE PACKAGE

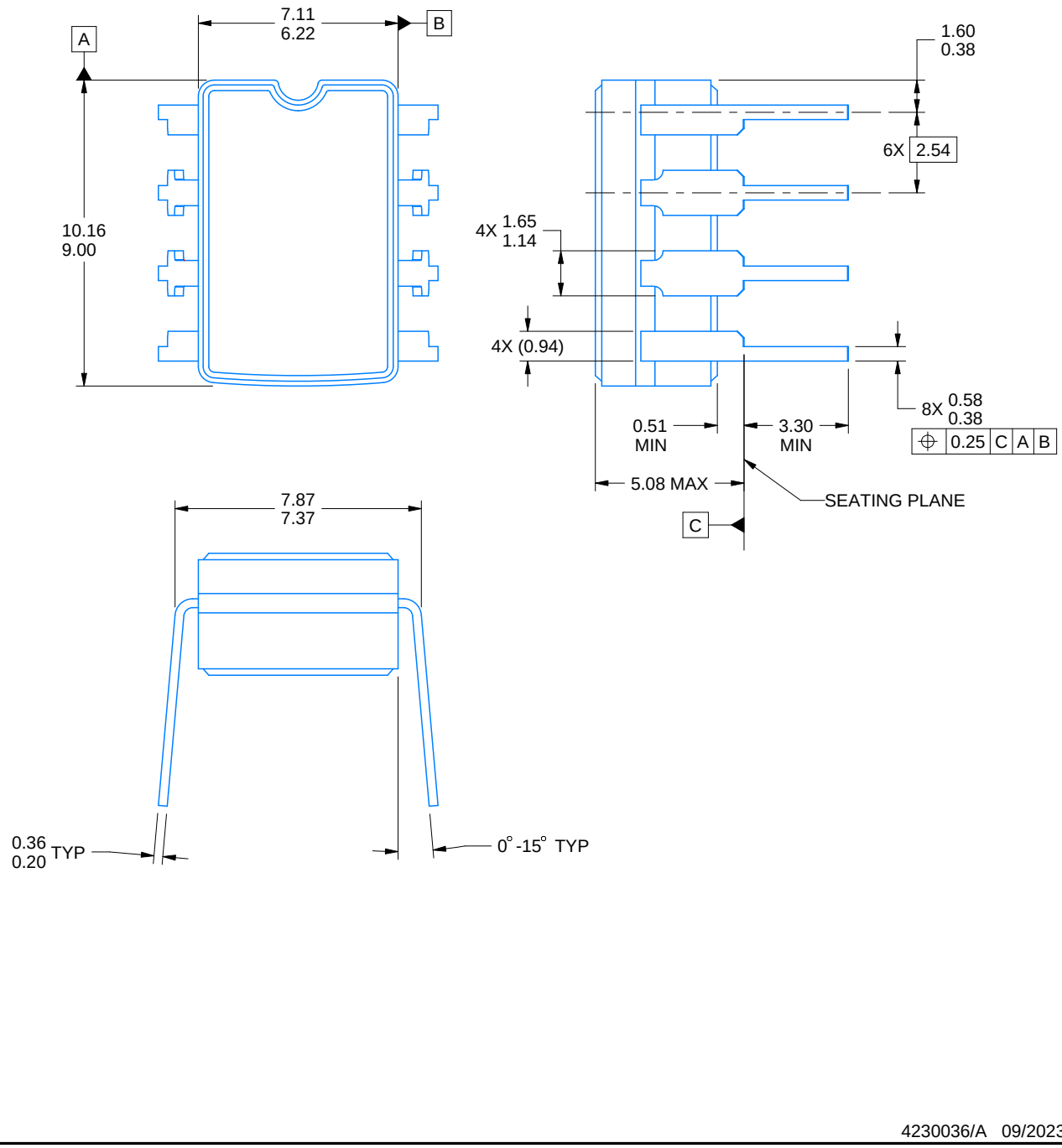

4230036/A 09/2023

NOTES:

1. All linear dimensions are in millimeters. Any dimensions in parenthesis are for reference only. Dimensioning and tolerancing per ASME Y14.5M.
2. This drawing is subject to change without notice.
3. This package can be hermetically sealed with a ceramic lid using glass frit.
4. Index point is provided on cap for terminal identification.
5. Falls within MIL STD 1835 GDIP1-T8

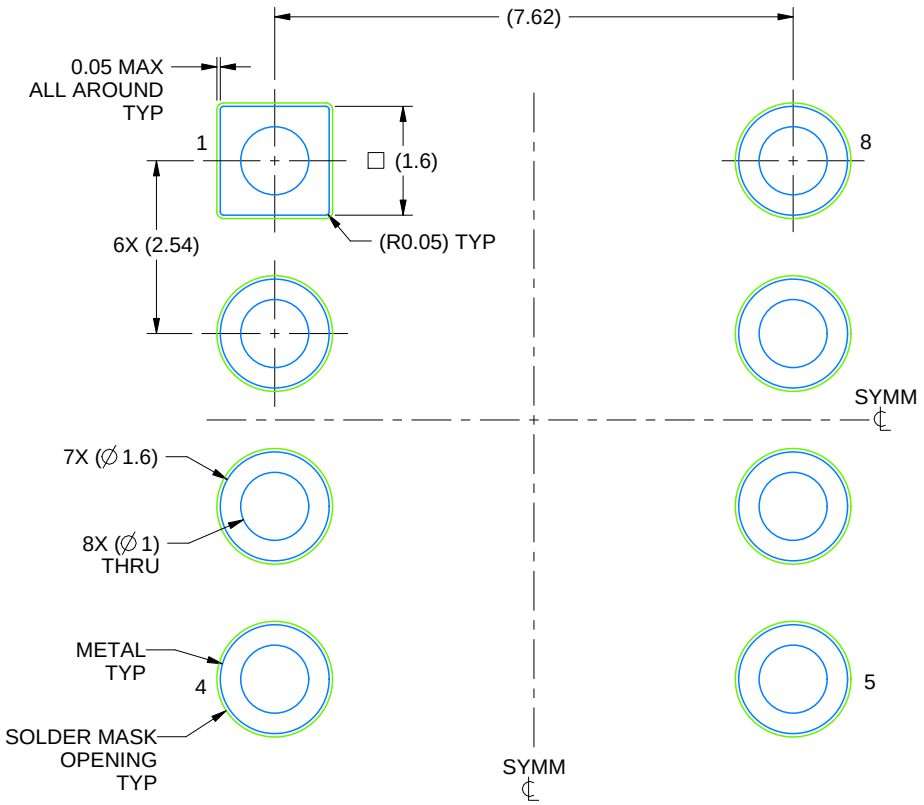

LAND PATTERN EXAMPLE
NON SOLDER MASK DEFINED
SCALE: 9X

4230036/A 09/2023

GENERIC PACKAGE VIEW

FK 20

LCCC - 2.03 mm max height

8.89 x 8.89, 1.27 mm pitch

LEADLESS CERAMIC CHIP CARRIER

This image is a representation of the package family, actual package may vary.
Refer to the product data sheet for package details.

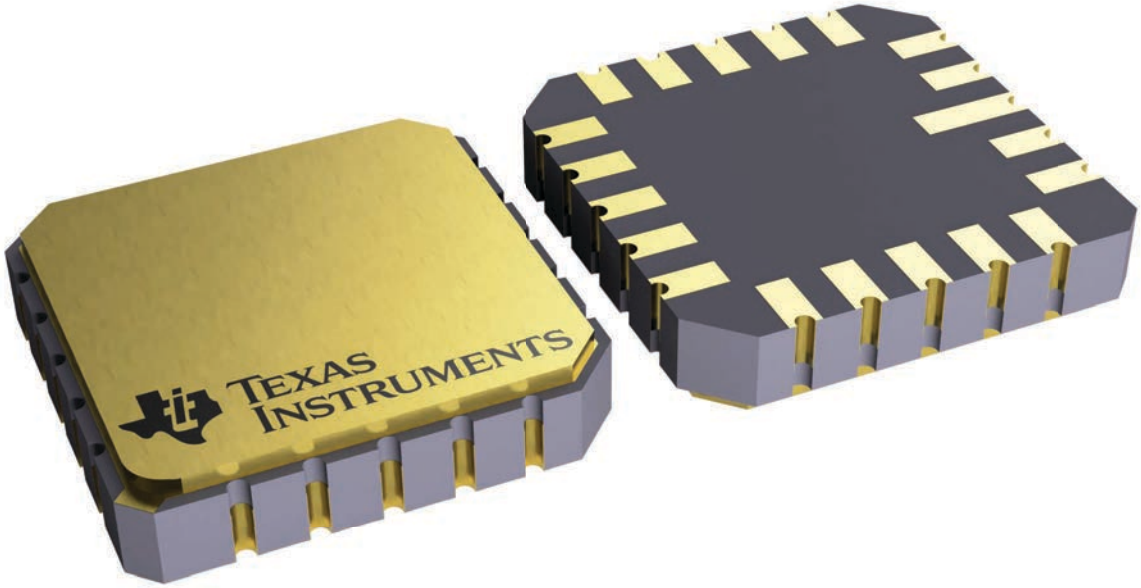

4229370VA\

J (R–GDIP–T**) CERAMIC DUAL IN–LINE PACKAGE

14 LEADS SHOWN

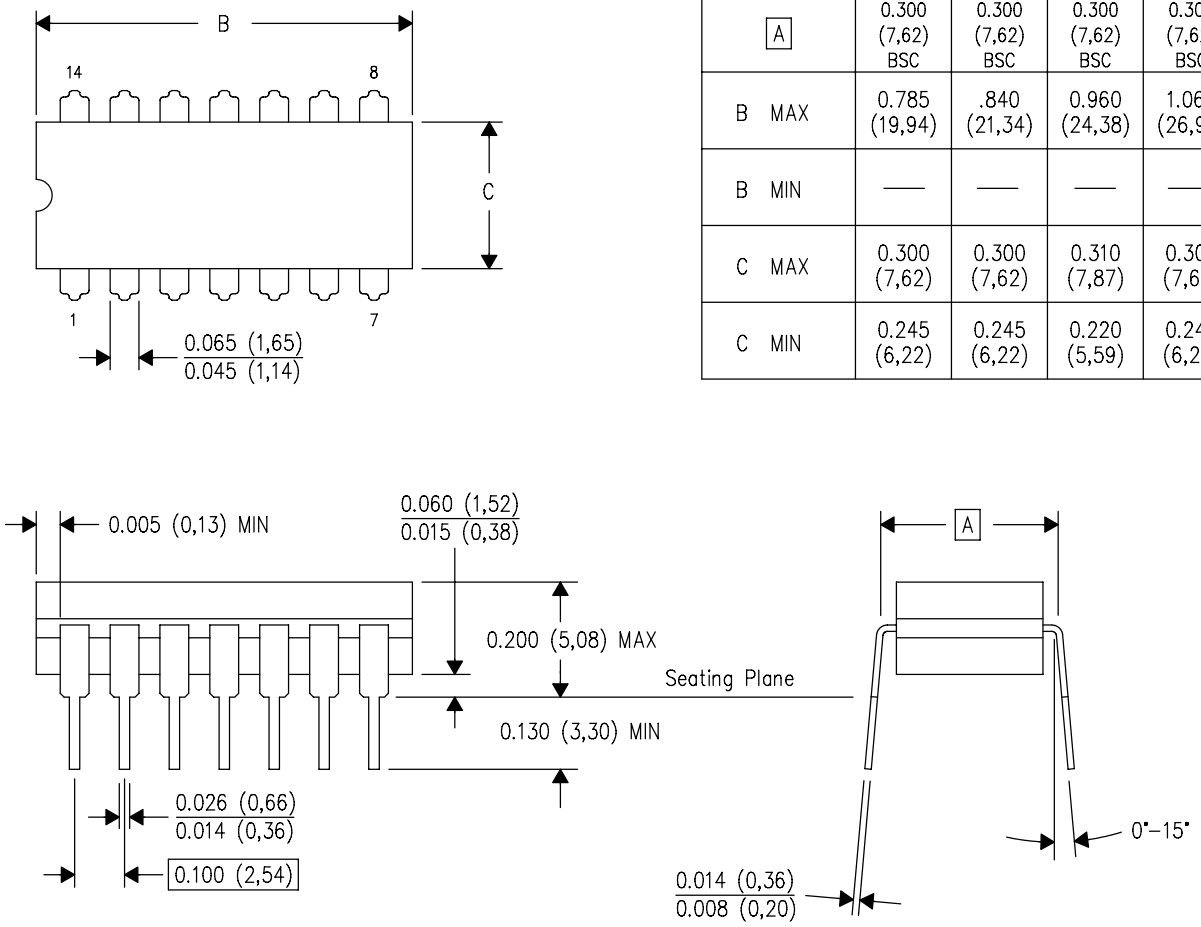

DIM \ PINS **	14	16	18	20
A	0.300 (7,62) BSC	0.300 (7,62) BSC	0.300 (7,62) BSC	0.300 (7,62) BSC
B MAX	0.785 (19,94)	.840 (21,34)	0.960 (24,38)	1.060 (26,92)
B MIN	—	—	—	—
C MAX	0.300 (7,62)	0.300 (7,62)	0.310 (7,87)	0.300 (7,62)
C MIN	0.245 (6,22)	0.245 (6,22)	0.220 (5,59)	0.245 (6,22)

4040083/F 03/03

NOTES:
- A. All linear dimensions are in inches (millimeters).
- B. This drawing is subject to change without notice.
- C. This package is hermetically sealed with a ceramic lid using glass frit.
- D. Index point is provided on cap for terminal identification only on press ceramic glass frit seal only.
- E. Falls within MIL STD 1835 GDIP1–T14, GDIP1–T16, GDIP1–T18 and GDIP1–T20.

P (R–PDIP–T8) PLASTIC DUAL–IN–LINE PACKAGE

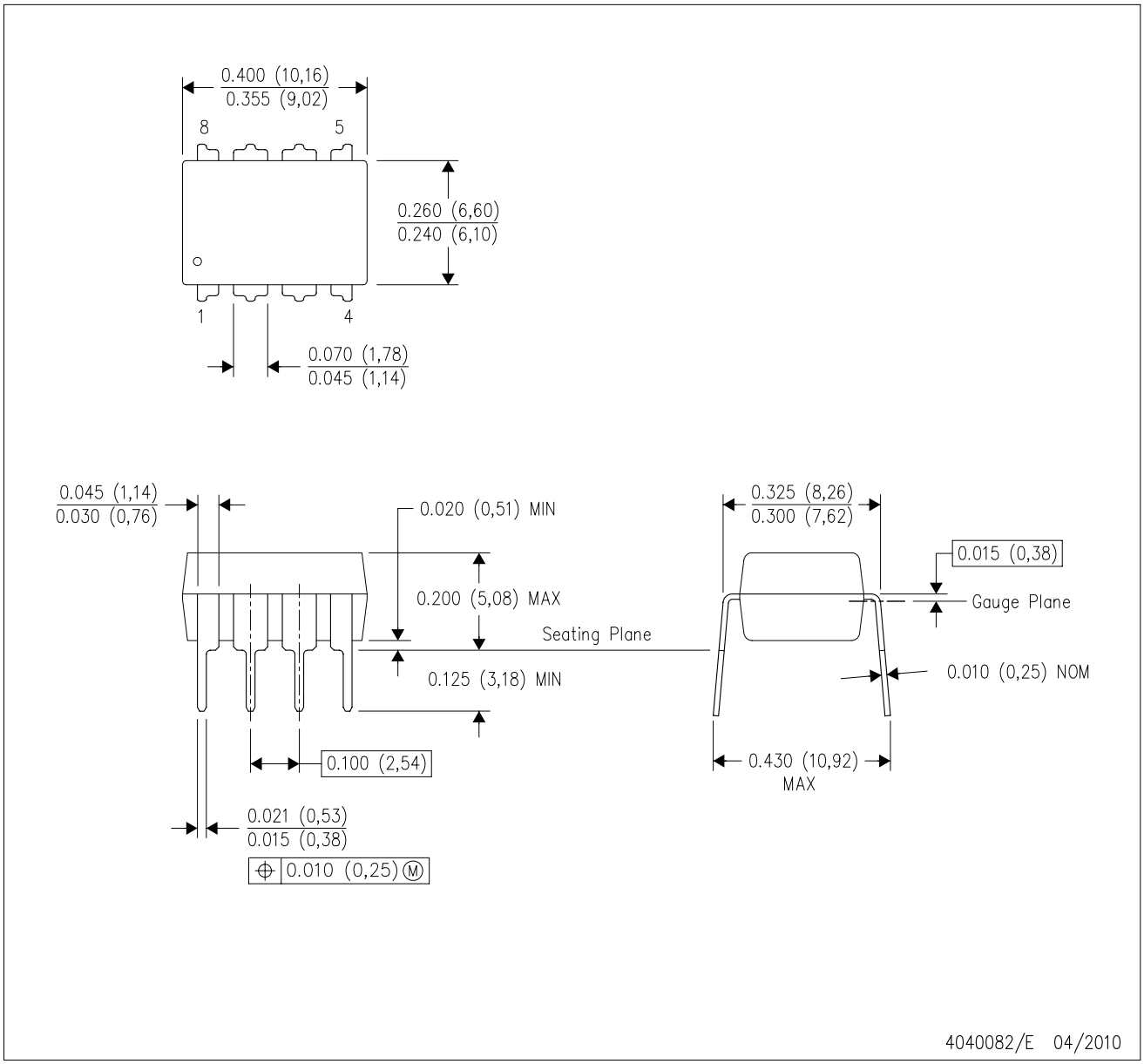

NOTES:
A. All linear dimensions are in inches (millimeters).
B. This drawing is subject to change without notice.
C. Falls within JEDEC MS–001 variation BA.

N (R–PDIP–T**) PLASTIC DUAL–IN–LINE PACKAGE

16 PINS SHOWN

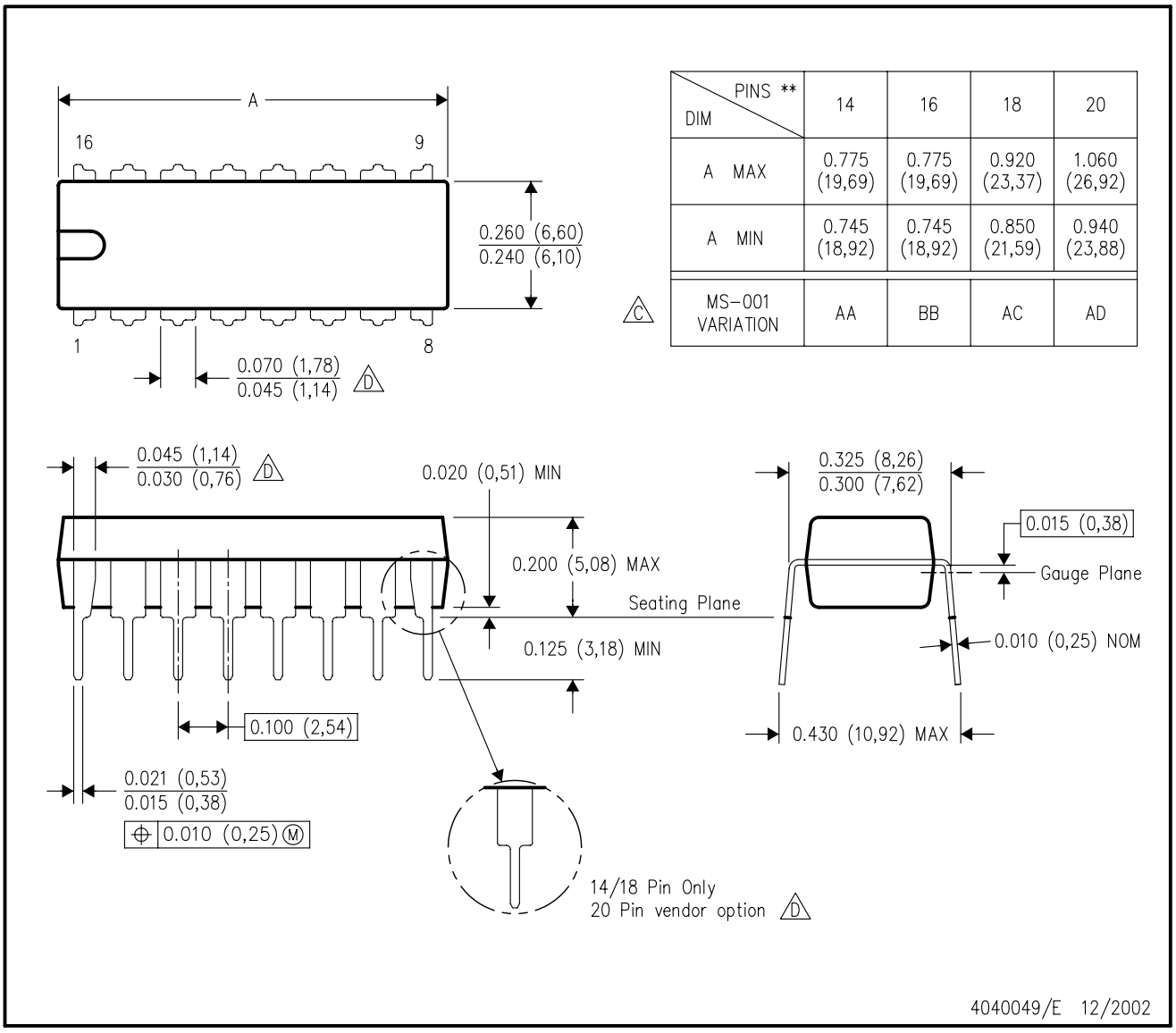

DIM \ PINS **	14	16	18	20
A MAX	0.775 (19,69)	0.775 (19,69)	0.920 (23,37)	1.060 (26,92)
A MIN	0.745 (18,92)	0.745 (18,92)	0.850 (21,59)	0.940 (23,88)
MS–001 VARIATION (C)	AA	BB	AC	AD

NOTES:
A. All linear dimensions are in inches (millimeters).
B. This drawing is subject to change without notice.
C. Falls within JEDEC MS–001, except 18 and 20 pin minimum body length (Dim A).
D. The 20 pin end lead shoulder width is a vendor option, either half or full width.

GENERIC PACKAGE VIEW

DW 16

SOIC - 2.65 mm max height

7.5 x 10.3, 1.27 mm pitch

SMALL OUTLINE INTEGRATED CIRCUIT

This image is a representation of the package family, actual package may vary.
Refer to the product data sheet for package details.

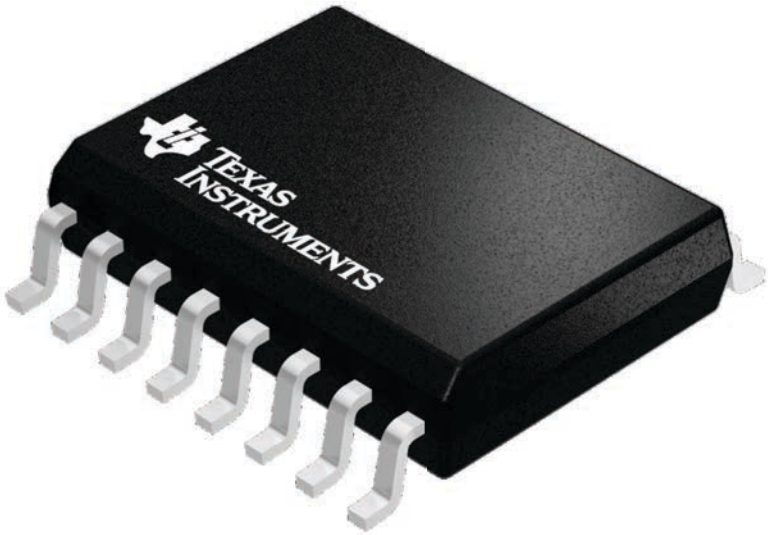

4224780/A

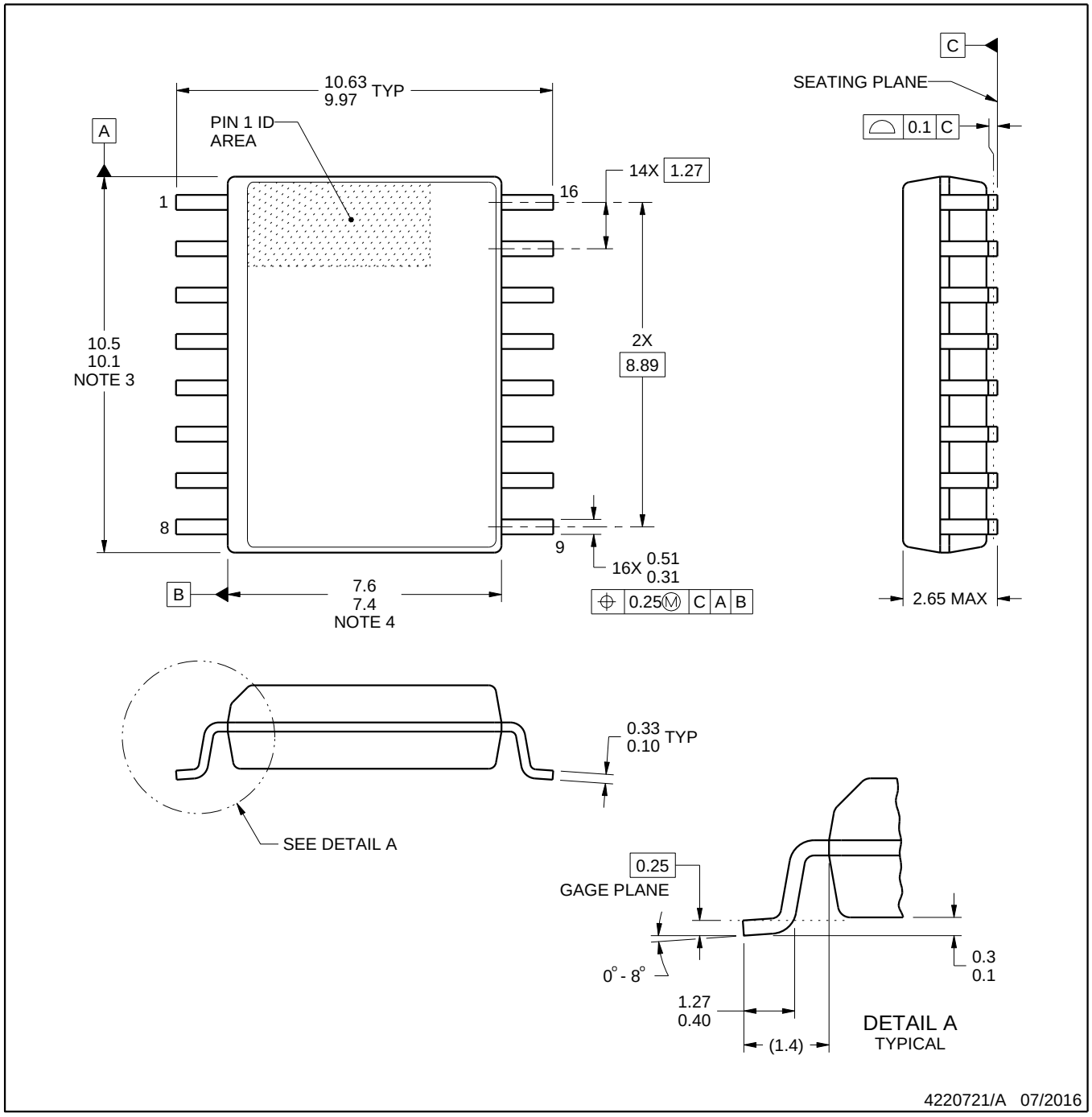

NOTES:

1. All linear dimensions are in millimeters. Dimensions in parenthesis are for reference only. Dimensioning and tolerancing per ASME Y14.5M.
2. This drawing is subject to change without notice.
3. This dimension does not include mold flash, protrusions, or gate burrs. Mold flash, protrusions, or gate burrs shall not exceed 0.15 mm, per side.
4. This dimension does not include interlead flash. Interlead flash shall not exceed 0.25 mm, per side.
5. Reference JEDEC registration MS-013.

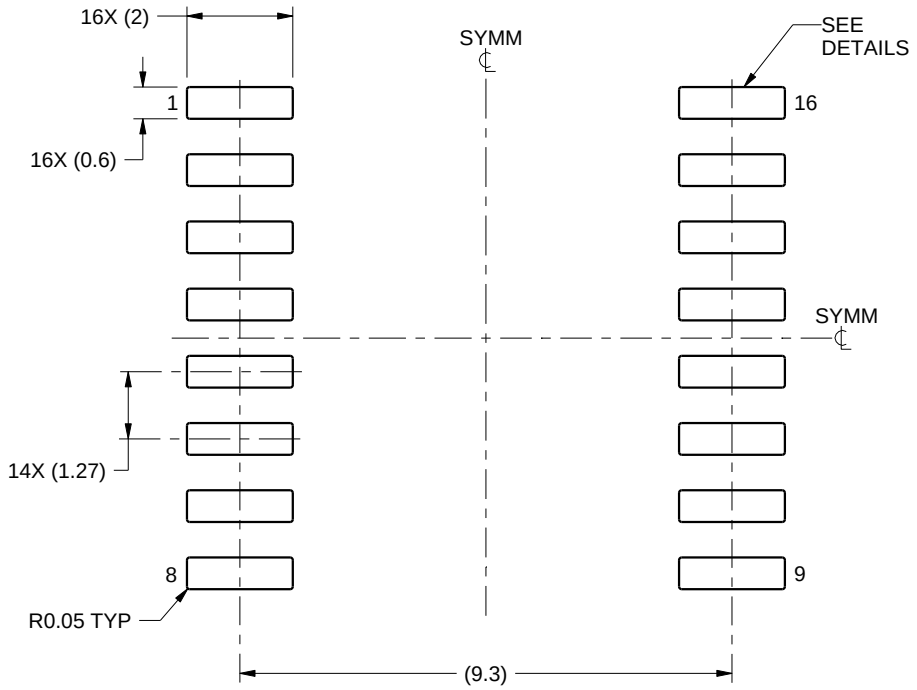

LAND PATTERN EXAMPLE
SCALE:7X

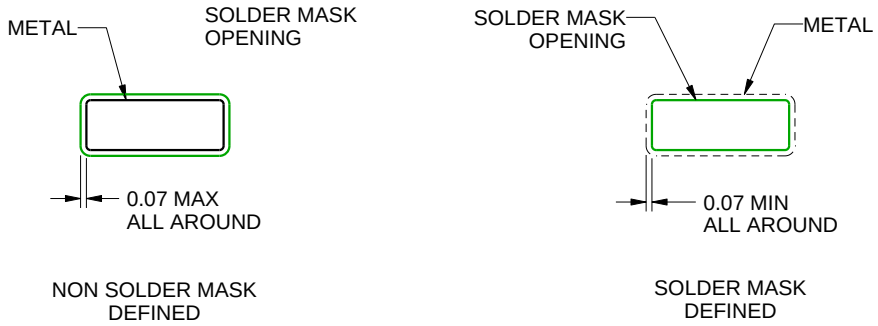

SOLDER MASK DETAILS

4220721/A 07/2016

NOTES: (continued)

6. Publication IPC-7351 may have alternate designs.
7. Solder mask tolerances between and around signal pads can vary based on board fabrication site.

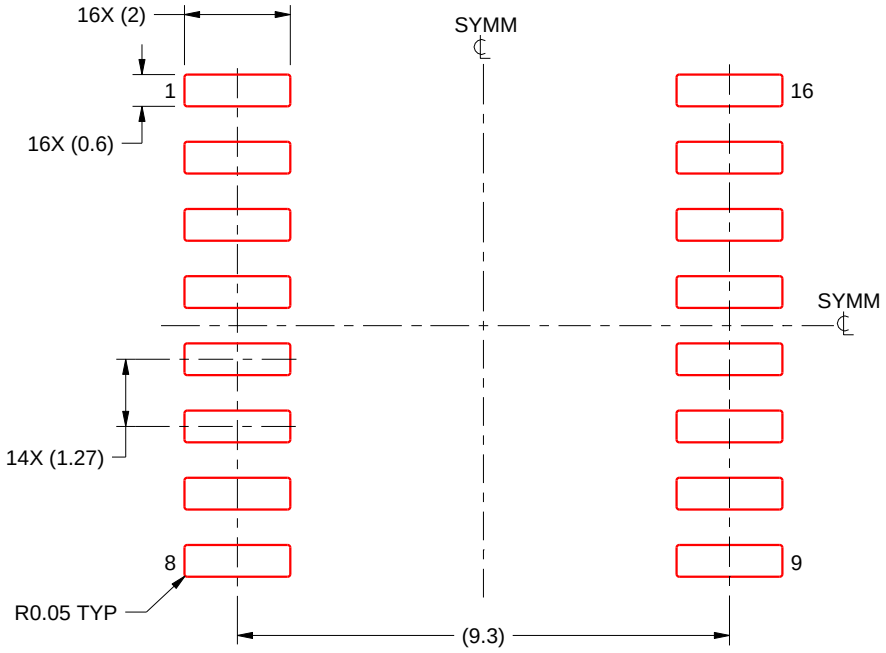

SOLDER PASTE EXAMPLE
BASED ON 0.125 mm THICK STENCIL
SCALE:7X

4220721/A 07/2016

NOTES: (continued)

8. Laser cutting apertures with trapezoidal walls and rounded corners may offer better paste release. IPC-7525 may have alternate design recommendations.
9. Board assembly site may have different recommendations for stencil design.

IMPORTANT NOTICE AND DISCLAIMER

TI PROVIDES TECHNICAL AND RELIABILITY DATA (INCLUDING DATA SHEETS), DESIGN RESOURCES (INCLUDING REFERENCE DESIGNS), APPLICATION OR OTHER DESIGN ADVICE, WEB TOOLS, SAFETY INFORMATION, AND OTHER RESOURCES “AS IS” AND WITH ALL FAULTS, AND DISCLAIMS ALL WARRANTIES, EXPRESS AND IMPLIED, INCLUDING WITHOUT LIMITATION ANY IMPLIED WARRANTIES OF MERCHANTABILITY, FITNESS FOR A PARTICULAR PURPOSE OR NON-INFRINGEMENT OF THIRD PARTY INTELLECTUAL PROPERTY RIGHTS.

These resources are intended for skilled developers designing with TI products. You are solely responsible for (1) selecting the appropriate TI products for your application, (2) designing, validating and testing your application, and (3) ensuring your application meets applicable standards, and any other safety, security, regulatory or other requirements.

These resources are subject to change without notice. TI grants you permission to use these resources only for development of an application that uses the TI products described in the resource. Other reproduction and display of these resources is prohibited. No license is granted to any other TI intellectual property right or to any third party intellectual property right. TI disclaims responsibility for, and you will fully indemnify TI and its representatives against, any claims, damages, costs, losses, and liabilities arising out of your use of these resources.

TI’s products are provided subject to TI’s Terms of Sale or other applicable terms available either on ti.com or provided in conjunction with such TI products. TI’s provision of these resources does not expand or otherwise alter TI’s applicable warranties or warranty disclaimers for TI products.

TI objects to and rejects any additional or different terms you may have proposed.

Mailing Address: Texas Instruments, Post Office Box 655303, Dallas, Texas 75265
Copyright © 2025, Texas Instruments Incorporated