- **3-State Buffer-Type Noninverting Outputs Drive Bus Lines Directly**
- **Bus-Structured Pinout**
- **Buffered Control Inputs**
- **SN74ALS575A and ´AS575 Have Synchronous Clear**
- **Package Options Include Plastic Small-Outline (DW) Packages, Ceramic Chip Carriers (FK), Standard Plastic (N, NT) and Ceramic (J, JT) 300-mil DIPs, and Ceramic Flat (W) Packages**

description

These octal D-type edge-triggered flip-flops feature 3-state outputs designed specifically for bus driving. They are particularly suitable for implementing buffer registers, I/O ports, bidirectional bus drivers, and working registers.

The eight flip-flops enter data on the low-to-high transition of the clock (CLK) input. The SN74ALS575A, SN54AS575, and SN74AS575 may be synchronously cleared by taking the clear ($\overline{CLR}$) input low.

The output-enable ($\overline{OE}$) input does not affect internal operations of the flip-flops. Old data can be retained or new data can be entered while the outputs are in the high-impedance state.

The SN54ALS574B, SN54AS574, and SN54AS575 are characterized for operation over the full military temperature range of –55°C to 125°C. The SN74ALS574B, SN74ALS575A, SN74AS574, and SN74AS575 are characterized for operation from 0°C to 70°C.

SN54ALS574B, SN54AS574 . . . J OR W PACKAGE
SN74ALS574B, SN74AS574 . . . DW OR N PACKAGE
(TOP VIEW)

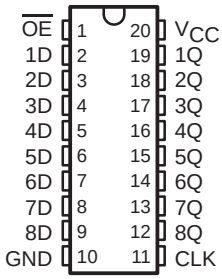

SN54ALS574B, SN54AS574 . . . FK PACKAGE
(TOP VIEW)

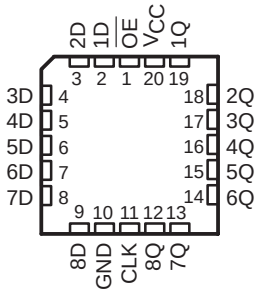

SN54AS575 . . . JT OR W PACKAGE
SN74ALS575A, SN74AS575 . . . DW OR NT PACKAGE
(TOP VIEW)

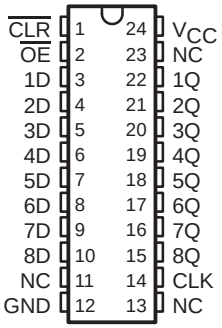

SN54AS575 . . . FK PACKAGE
(TOP VIEW)

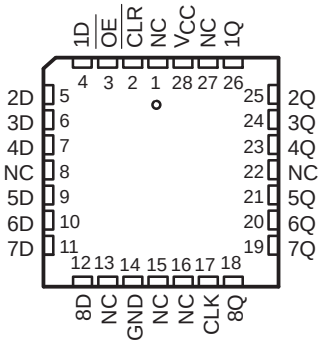

NC – No internal connection

PRODUCTION DATA information is current as of publication date. Products conform to specifications per the terms of Texas Instruments standard warranty. Production processing does not necessarily include testing of all parameters.

Copyright © 1995, Texas Instruments Incorporated

Function Tables

SN54ALS574B, SN74ALS574B, SN54AS574, SN74AS574
(each flip-flop)

INPUTS			OUTPUT
$\overline{OE}$	CLK	D	Q
L	↑	H	H
L	↑	L	L
L	L	X	Q_0
H	X	X	Z

SN74ALS575A, SN54AS575, SN74AS575
(each flip-flop)

INPUTS				OUTPUT
$\overline{OE}$	$\overline{CLR}$	CLK	D	Q
L	L	↑	X	L
L	H	↑	H	H
L	H	↑	L	L
L	H	L	X	Q_0
H	X	H	X	Z

logic symbols†

SN54ALS574B, SN74ALS574B, SN54AS574, SN74AS574

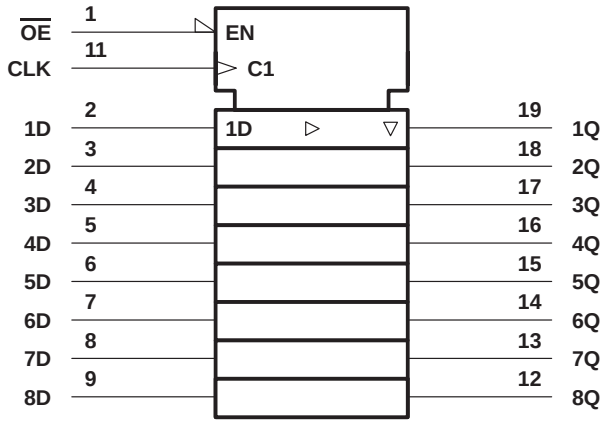

SN74ALS575A, SN54AS575, SN74AS575

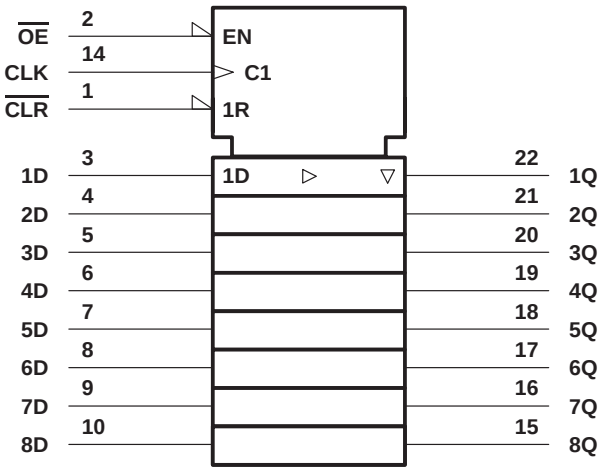

† These symbols are in accordance with ANSI/IEEE Std 91-1984 and IEC Publication 617-12.
Pin numbers shown are for the DW, J, JT, N, and NT packages.

logic diagrams (positive logic)

SN54ALS574B, SN74ALS574B, SN54AS574, SN74AS574

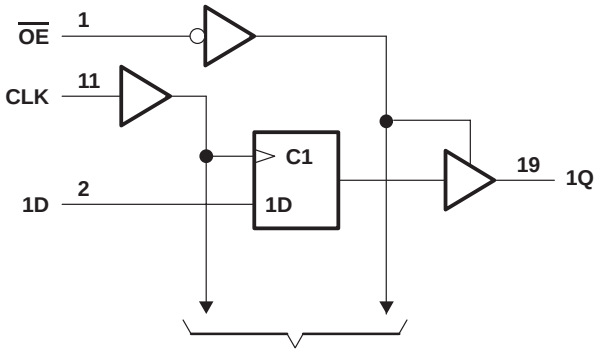

SN74ALS575A, SN54AS575, SN74AS575

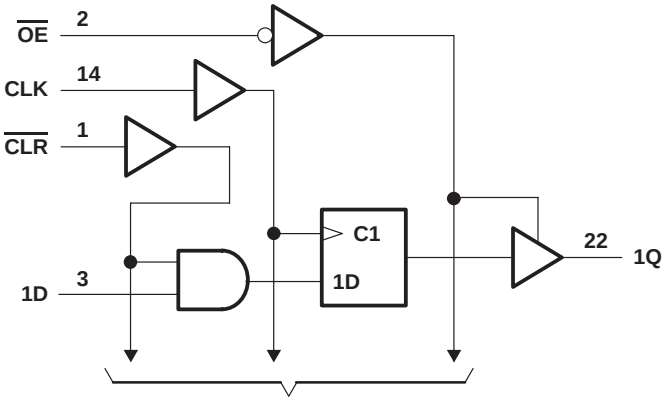

Pin numbers shown are for the DW, J, JT, N, and NT packages.

absolute maximum ratings over operating free-air temperature range (unless otherwise noted)†

Supply voltage, V_{CC} . . . . . 7 V
Input voltage, V_I . . . . . 7 V
Voltage applied to a disabled 3-state output . . . . . 5.5 V
Operating free-air temperature range, T_A: SN54ALS574B . . . . . –55°C to 125°C
SN74ALS574B, SN74ALS575A . . . . . 0°C to 70°C
Storage temperature range . . . . . –65°C to 150°C

† Stresses beyond those listed under “absolute maximum ratings” may cause permanent damage to the device. These are stress ratings only, and functional operation of the device at these or any other conditions beyond those indicated under “recommended operating conditions” is not implied. Exposure to absolute-maximum-rated conditions for extended periods may affect device reliability.

recommended operating conditions

			SN54ALS574B			SN74ALS574B SN74ALS575A			UNIT
			MIN	NOM	MAX	MIN	NOM	MAX	
V_{CC}	Supply voltage		4.5	5	5.5	4.5	5	5.5	V
V_{IH}	High-level input voltage		2			2			V
V_{IL}	Low-level input voltage				0.7			0.8	V
I_{OH}	High-level output current				–1			–2.6	mA
I_{OL}	Low-level output current				12			24	mA
f_{clock}	Clock frequency	′ALS574B	0		28	0		35	MHz
		SN74ALS575A				0		30	
t_w	Pulse duration	′ALS574B, CLK high or low	16.5			14			ns
		SN74ALS575A, CLK high or low				16.5			
t_{su}	Setup time before CLK↑	Data	15			15			ns
		SN74ALS575A, $\overline{CLR}$				15			
t_h	Hold time after CLK↑	Data	4			0			ns
		SN74ALS575A, $\overline{CLR}$				0			
T_A	Operating free-air temperature		–55		125	0		70	°C

electrical characteristics over recommended operating free-air temperature range (unless otherwise noted)

PARAMETER		TEST CONDITIONS		SN54ALS574B			SN74ALS574B SN74ALS575A			UNIT
				MIN	TYP†	MAX	MIN	TYP†	MAX	
V_{IK}		V_{CC} = 4.5 V,	I_I = –18 mA			–1.2			–1.2	V
V_{OH}		V_{CC} = 4.5 V to 5.5 V,	I_{OH} = –0.4 mA	V_{CC} –2			V_{CC} –2			V
		V_{CC} = 4.5 V	I_{OH} = –1 mA	2.4	3.3					
			I_{OH} = –2.6 mA				2.4	3.2		
V_{OL}		V_{CC} = 4.5 V	I_{OL} = 12 mA		0.25	0.4		0.25	0.4	V
			I_{OL} = 24 mA					0.35	0.5	
I_{OZH}		V_{CC} = 5.5 V,	V_O = 2.7 V			20			20	µA
I_{OZL}		V_{CC} = 5.5 V,	V_O = 0.4 V			–20			–20	µA
I_I		V_{CC} = 5.5 V,	V_I = 7 V			0.1			0.1	mA
I_{IH}		V_{CC} = 5.5 V,	V_I = 2.7 V			20			20	µA
I_{IL}		V_{CC} = 5.5 V,	V_I = 0.4 V			–0.2			–0.2	mA
I_O‡		V_{CC} = 5.5 V,	V_O = 2.25 V	–20		–112	–30		–112	mA
I_{CC}	′ALS574B	V_{CC} = 5.5 V	Outputs high		11	18		11	18	mA
			Outputs low		17	27		17	27	
			Outputs disabled		17	28		17	28	
	SN74ALS575A	V_{CC} = 5.5 V	Outputs high		10	17		10	17	
			Outputs low		15	24		15	24	
			Outputs disabled		16	30		16	30	

† All typical values are at V_{CC} = 5 V, T_A = 25°C.
‡ The output conditions have been chosen to produce a current that closely approximates one half of the true short-circuit output current, I_{OS}.

switching characteristics (see Figure 1)

PARAMETER	FROM (INPUT)	TO (OUTPUT)	V_{CC} = 4.5 V to 5.5 V, C_L = 50 pF, R1 = 500 Ω, R2 = 500 Ω, T_A = MIN to MAX§						UNIT
			SN54ALS574B		SN74ALS574B		SN74ALS575A		
			MIN	MAX	MIN	MAX	MIN	MAX	
f_{max}			28		35		30		MHz
t_{PLH}	CLK	Q	4	22	3	14	4	14	ns
t_{PHL}			4	17	4	14	4	14	
t_{PZH}	$\overline{OE}$	Q	4	21	3	18	4	18	ns
t_{PZL}			4	26	4	18	4	18	
t_{PHZ}	$\overline{OE}$	Q	2	16	1	10	2	10	ns
t_{PLZ}			2	25	2	12	3	13	

§ For conditions shown as MIN or MAX, use the appropriate value specified under recommended operating conditions.

absolute maximum ratings over operating free-air temperature range (unless otherwise noted)†

Supply voltage, V_{CC} . . . . . 7 V
Input voltage, V_I . . . . . 7 V
Voltage applied to a disabled 3-state output . . . . . 5.5 V
Operating free-air temperature range, T_A: SN54AS574, SN54AS575 . . . . . –55°C to 125°C
SN74AS574, SN74AS575 . . . . . 0°C to 70°C
Storage temperature range . . . . . –65°C to 150°C

† Stresses beyond those listed under "absolute maximum ratings" may cause permanent damage to the device. These are stress ratings only, and functional operation of the device at these or any other conditions beyond those indicated under "recommended operating conditions" is not implied. Exposure to absolute-maximum-rated conditions for extended periods may affect device reliability.

recommended operating conditions

			SN54AS574 SN54AS575			SN74AS574 SN74AS575			UNIT
			MIN	NOM	MAX	MIN	NOM	MAX	
V_{CC}	Supply voltage		4.5	5	5.5	4.5	5	5.5	V
V_{IH}	High-level input voltage		2			2			V
V_{IL}	Low-level input voltage				0.8			0.8	V
I_{OH}	High-level output current				–12			–15	mA
I_{OL}	Low-level output current				32			48	mA
f_{clock}*	Clock frequency		0		100	0		90	MHz
t_w*	Pulse duration	CLK high	5			5.5			ns
		CLK low	4			5.5			
t_{su}*	Setup time before CLK↑	Data	3			5.5			ns
		′AS575, $\overline{CLR}$ high or low	6.5			6.5			
t_h*	Hold time after CLK↑	Data	3			3			ns
		′AS575, $\overline{CLR}$	0			0			
T_A	Operating free-air temperature		–55		125	0		70	°C

* On products compliant to MIL-STD-883, Class B, this parameter is based on characterization data but is not production tested.

electrical characteristics over recommended operating free-air temperature range (unless otherwise noted)

PARAMETER		TEST CONDITIONS		SN54AS574 SN54AS575			SN74AS574 SN74AS575			UNIT
				MIN	TYP†	MAX	MIN	TYP†	MAX	
V_{IK}		V_{CC} = 4.5 V,	I_I = –18 mA			–1.2			–1.2	V
V_{OH}		V_{CC} = 4.5 V to 5.5 V,	I_{OH} = –2 mA	V_{CC} –2			V_{CC} –2			V
		V_{CC} = 4.5 V	I_{OH} = –12 mA	2.4	3.2					
			I_{OH} = –15 mA				2.4	3.3		
V_{OL}		V_{CC} = 4.5 V	I_{OL} = 32 mA		0.29	0.5				V
			I_{OL} = 48 mA					0.34	0.5	
I_{OZH}		V_{CC} = 5.5 V,	V_O = 2.7 V			50			50	µA
I_{OZL}		V_{CC} = 5.5 V,	V_O = 0.4 V			–50			–50	µA
I_I		V_{CC} = 5.5 V,	V_I = 7 V			0.1			0.1	mA
I_{IH}		V_{CC} = 5.5 V,	V_I = 2.7 V			20			20	µA
I_{IL}	$\overline{OE}$, CLK, $\overline{CLR}$	V_{CC} = 5.5 V,	V_I = 0.4 V			–0.5			–0.5	mA
	D					–3			–2	
I_O‡		V_{CC} = 5.5 V,	V_O = 2.25 V	–30		–112	–30		–112	mA
I_{CC}	′AS574	V_{CC} = 5.5 V	Outputs high		73	116		73	116	mA
			Outputs low		85	134		85	134	
			Outputs disabled		84	134		84	134	
	′AS575	V_{CC} = 5.5 V	Outputs high		78	126		78	126	
			Outputs low		89	142		89	142	
			Outputs disabled		88	142		88	142	

† All typical values are at V_{CC} = 5 V, T_A = 25°C.
‡ The output conditions have been chosen to produce a current that closely approximates one half of the true short-circuit output current, I_{OS}.

switching characteristics (see Figure 1)

PARAMETER	FROM (INPUT)	TO (OUTPUT)	V_{CC} = 4.5 V to 5.5 V, C_L = 50 pF, R1 = 500 Ω, R2 = 500 Ω, T_A = MIN to MAX§				UNIT
			SN54AS574 SN54AS575		SN74AS574 SN74AS575		
			MIN	MAX	MIN	MAX	
f_{max}*			100		90		MHz
t_{PLH}	CLK	Any Q	3	11	3	8	ns
t_{PHL}			4	11	4	9	
t_{PZH}	$\overline{OE}$	Any Q	2	7	2	6	ns
t_{PZL}			3	11	3	10	
t_{PHZ}	$\overline{OE}$	Any Q	2	7	2	6	ns
t_{PLZ}			2	7	2	6	

* On products compliant to MIL-STD-883, Class B, this parameter is based on characterization data but is not production tested.
§ For conditions shown as MIN or MAX, use the appropriate value specified under recommended operating conditions.

PARAMETER MEASUREMENT INFORMATION
SERIES 54ALS/74ALS AND 54AS/74AS DEVICES

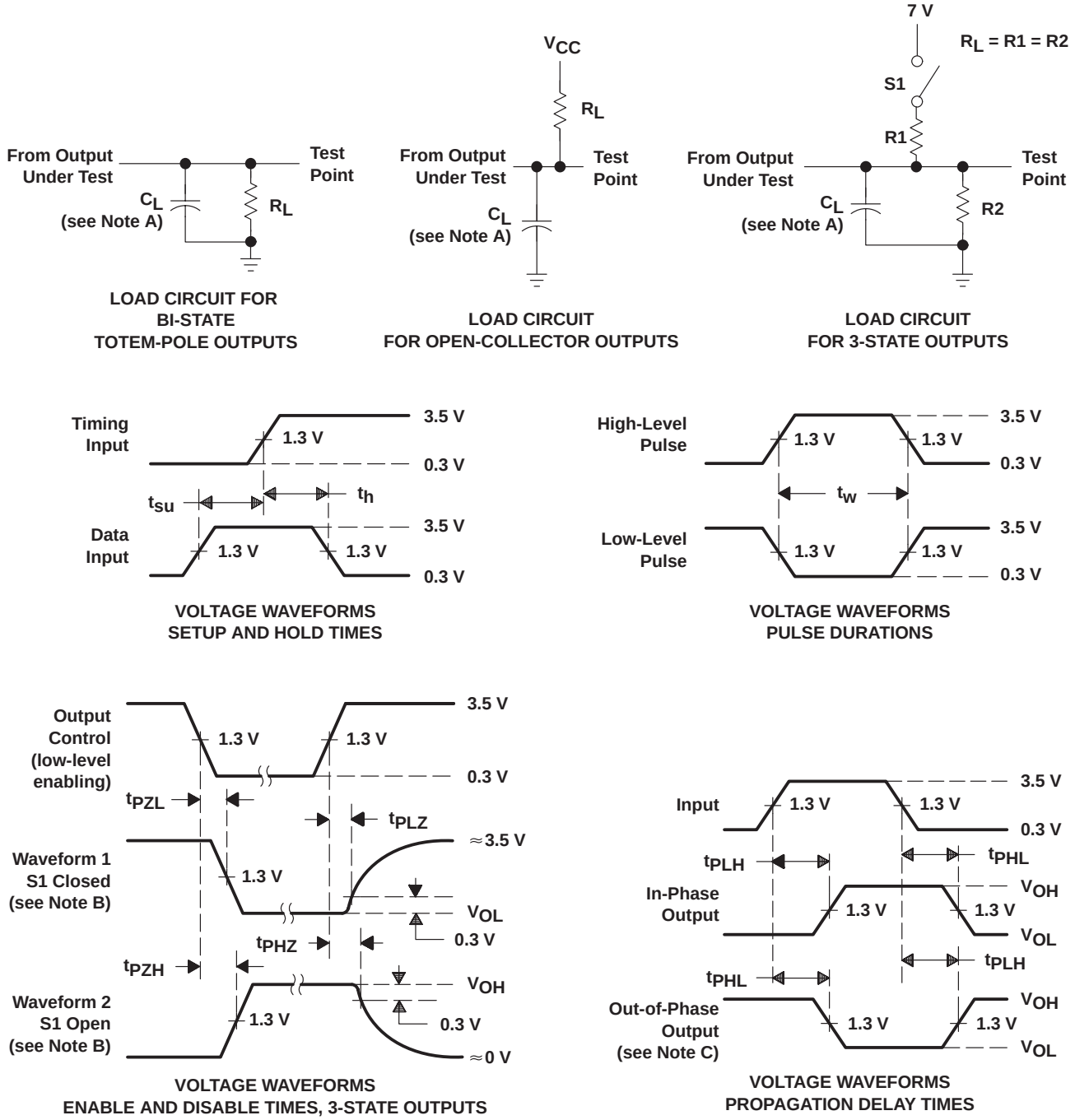

NOTES: A. C_L includes probe and jig capacitance.
B. Waveform 1 is for an output with internal conditions such that the output is low except when disabled by the output control. Waveform 2 is for an output with internal conditions such that the output is high except when disabled by the output control.
C. When measuring propagation delay items of 3-state outputs, switch S1 is open.
D. All input pulses have the following characteristics: PRR ≤ 1 MHz, $t_r = t_f$ = 2 ns, duty cycle = 50%.
E. The outputs are measured one at a time with one transition per measurement.

Figure 1. Load Circuits and Voltage Waveforms

PACKAGING INFORMATION

Orderable part number	Status (1)	Material type (2)	Package | Pins	Package qty | Carrier	RoHS (3)	Lead finish/ Ball material (4)	MSL rating/ Peak reflow (5)	Op temp (°C)	Part marking (6)
84001012A	Active	Production	LCCC (FK) | 20	55 | TUBE	No	SNPB	N/A for Pkg Type	-55 to 125	84001012A SNJ54ALS 574BFK
8400101RA	Active	Production	CDIP (J) | 20	20 | TUBE	No	SNPB	N/A for Pkg Type	-55 to 125	8400101RA SNJ54ALS574BJ
8400101SA	Active	Production	CFP (W) | 20	25 | TUBE	No	SNPB	N/A for Pkg Type	-55 to 125	8400101SA SNJ54ALS574BW
JM38510/37104B2A	Active	Production	LCCC (FK) | 20	55 | TUBE	No	SNPB	N/A for Pkg Type	-55 to 125	JM38510/ 37104B2A
JM38510/37104B2A.A	Active	Production	LCCC (FK) | 20	55 | TUBE	No	SNPB	N/A for Pkg Type	-55 to 125	JM38510/ 37104B2A
JM38510/37104BRA	Active	Production	CDIP (J) | 20	20 | TUBE	No	SNPB	N/A for Pkg Type	-55 to 125	JM38510/ 37104BRA
JM38510/37104BRA.A	Active	Production	CDIP (J) | 20	20 | TUBE	No	SNPB	N/A for Pkg Type	-55 to 125	JM38510/ 37104BRA
M38510/37104B2A	Active	Production	LCCC (FK) | 20	55 | TUBE	No	SNPB	N/A for Pkg Type	-55 to 125	JM38510/ 37104B2A
M38510/37104BRA	Active	Production	CDIP (J) | 20	20 | TUBE	No	SNPB	N/A for Pkg Type	-55 to 125	JM38510/ 37104BRA
SN54ALS574BJ	Active	Production	CDIP (J) | 20	20 | TUBE	No	SNPB	N/A for Pkg Type	-55 to 125	SN54ALS574BJ
SN54ALS574BJ.A	Active	Production	CDIP (J) | 20	20 | TUBE	No	SNPB	N/A for Pkg Type	-55 to 125	SN54ALS574BJ
SN54AS574J	Active	Production	CDIP (J) | 20	20 | TUBE	No	SNPB	N/A for Pkg Type	-55 to 125	SN54AS574J
SN54AS574J.A	Active	Production	CDIP (J) | 20	20 | TUBE	No	SNPB	N/A for Pkg Type	-55 to 125	SN54AS574J
SN74ALS574BDW	Obsolete	Production	SOIC (DW) | 20	-	-	Call TI	Call TI	0 to 70	ALS574B
SN74ALS574BDWR	Active	Production	SOIC (DW) | 20	2000 | LARGE T&R	Yes	NIPDAU	Level-1-260C-UNLIM	0 to 70	ALS574B
SN74ALS574BDWR.A	Active	Production	SOIC (DW) | 20	2000 | LARGE T&R	Yes	NIPDAU	Level-1-260C-UNLIM	0 to 70	ALS574B
SN74ALS574BN	Active	Production	PDIP (N) | 20	20 | TUBE	Yes	NIPDAU	N/A for Pkg Type	0 to 70	SN74ALS574BN
SN74ALS574BN.A	Active	Production	PDIP (N) | 20	20 | TUBE	Yes	NIPDAU	N/A for Pkg Type	0 to 70	SN74ALS574BN
SN74ALS574BNE4	Active	Production	PDIP (N) | 20	20 | TUBE	Yes	NIPDAU	N/A for Pkg Type	0 to 70	SN74ALS574BN
SN74ALS574BNSR	Active	Production	SOP (NS) | 20	2000 | LARGE T&R	Yes	NIPDAU	Level-1-260C-UNLIM	0 to 70	ALS574B
SN74ALS574BNSR.A	Active	Production	SOP (NS) | 20	2000 | LARGE T&R	Yes	NIPDAU	Level-1-260C-UNLIM	0 to 70	ALS574B
SN74ALS575ADW	Active	Production	SOIC (DW) | 24	25 | TUBE	Yes	NIPDAU	Level-1-260C-UNLIM	0 to 70	ALS575A

Orderable part number	Status (1)	Material type (2)	Package | Pins	Package qty | Carrier	RoHS (3)	Lead finish/ Ball material (4)	MSL rating/ Peak reflow (5)	Op temp (°C)	Part marking (6)
SN74ALS575ADW.A	Active	Production	SOIC (DW) | 24	25 | TUBE	Yes	NIPDAU	Level-1-260C-UNLIM	0 to 70	ALS575A
SN74AS574DW	Obsolete	Production	SOIC (DW) | 20	-	-	Call TI	Call TI	0 to 70	AS574
SN74AS574DWR	Active	Production	SOIC (DW) | 20	2000 | LARGE T&R	Yes	NIPDAU	Level-1-260C-UNLIM	0 to 70	AS574
SN74AS574DWR.A	Active	Production	SOIC (DW) | 20	2000 | LARGE T&R	Yes	NIPDAU	Level-1-260C-UNLIM	0 to 70	AS574
SN74AS574N	Active	Production	PDIP (N) | 20	20 | TUBE	Yes	NIPDAU	N/A for Pkg Type	0 to 70	SN74AS574N
SN74AS574N.A	Active	Production	PDIP (N) | 20	20 | TUBE	Yes	NIPDAU	N/A for Pkg Type	0 to 70	SN74AS574N
SNJ54ALS574BFK	Active	Production	LCCC (FK) | 20	55 | TUBE	No	SNPB	N/A for Pkg Type	-55 to 125	84001012A SNJ54ALS 574BFK
SNJ54ALS574BFK.A	Active	Production	LCCC (FK) | 20	55 | TUBE	No	SNPB	N/A for Pkg Type	-55 to 125	84001012A SNJ54ALS 574BFK
SNJ54ALS574BJ	Active	Production	CDIP (J) | 20	20 | TUBE	No	SNPB	N/A for Pkg Type	-55 to 125	8400101RA SNJ54ALS574BJ
SNJ54ALS574BJ.A	Active	Production	CDIP (J) | 20	20 | TUBE	No	SNPB	N/A for Pkg Type	-55 to 125	8400101RA SNJ54ALS574BJ
SNJ54ALS574BW	Active	Production	CFP (W) | 20	25 | TUBE	No	SNPB	N/A for Pkg Type	-55 to 125	8400101SA SNJ54ALS574BW
SNJ54ALS574BW.A	Active	Production	CFP (W) | 20	25 | TUBE	No	SNPB	N/A for Pkg Type	-55 to 125	8400101SA SNJ54ALS574BW
SNJ54AS574J	Active	Production	CDIP (J) | 20	20 | TUBE	No	SNPB	N/A for Pkg Type	-55 to 125	SNJ54AS574J
SNJ54AS574J.A	Active	Production	CDIP (J) | 20	20 | TUBE	No	SNPB	N/A for Pkg Type	-55 to 125	SNJ54AS574J

(1) **Status:** For more details on status, see our product life cycle.

(2) **Material type:** When designated, preproduction parts are prototypes/experimental devices, and are not yet approved or released for full production. Testing and final process, including without limitation quality assurance, reliability performance testing, and/or process qualification, may not yet be complete, and this item is subject to further changes or possible discontinuation. If available for ordering, purchases will be subject to an additional waiver at checkout, and are intended for early internal evaluation purposes only. These items are sold without warranties of any kind.

(3) **RoHS values:** Yes, No, RoHS Exempt. See the TI RoHS Statement for additional information and value definition.

(4) **Lead finish/Ball material:** Parts may have multiple material finish options. Finish options are separated by a vertical ruled line. Lead finish/Ball material values may wrap to two lines if the finish value exceeds the maximum column width.

(5) **MSL rating/Peak reflow:** The moisture sensitivity level ratings and peak solder (reflow) temperatures. In the event that a part has multiple moisture sensitivity ratings, only the lowest level per JEDEC standards is shown. Refer to the shipping label for the actual reflow temperature that will be used to mount the part to the printed circuit board.

(6) **Part marking:** There may be an additional marking, which relates to the logo, the lot trace code information, or the environmental category of the part.

Multiple part markings will be inside parentheses. Only one part marking contained in parentheses and separated by a "~" will appear on a part. If a line is indented then it is a continuation of the previous line and the two combined represent the entire part marking for that device.

Important Information and Disclaimer: The information provided on this page represents TI's knowledge and belief as of the date that it is provided. TI bases its knowledge and belief on information provided by third parties, and makes no representation or warranty as to the accuracy of such information. Efforts are underway to better integrate information from third parties. TI has taken and continues to take reasonable steps to provide representative and accurate information but may not have conducted destructive testing or chemical analysis on incoming materials and chemicals. TI and TI suppliers consider certain information to be proprietary, and thus CAS numbers and other limited information may not be available for release.

In no event shall TI's liability arising out of such information exceed the total purchase price of the TI part(s) at issue in this document sold by TI to Customer on an annual basis.

OTHER QUALIFIED VERSIONS OF SN54ALS574B, SN54AS574, SN74ALS574B, SN74AS574 :

- Catalog : SN74ALS574B, SN74AS574
- Military : SN54ALS574B, SN54AS574

NOTE: Qualified Version Definitions:

- Catalog - TI's standard catalog product
- Military - QML certified for Military and Defense Applications

TAPE AND REEL INFORMATION

REEL DIMENSIONS

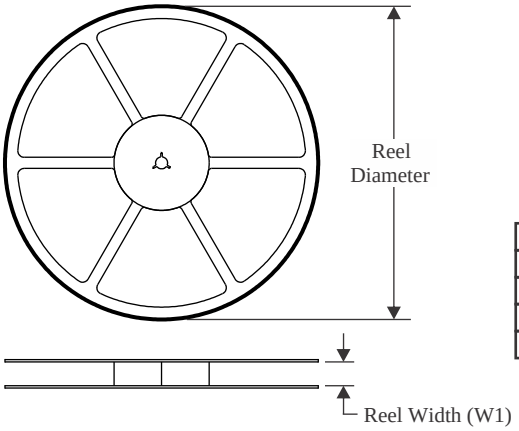

TAPE DIMENSIONS

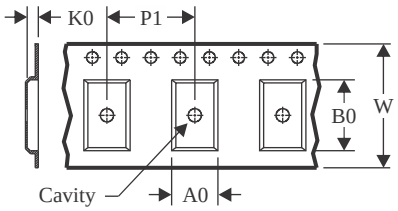

A0	Dimension designed to accommodate the component width
B0	Dimension designed to accommodate the component length
K0	Dimension designed to accommodate the component thickness
W	Overall width of the carrier tape
P1	Pitch between successive cavity centers

QUADRANT ASSIGNMENTS FOR PIN 1 ORIENTATION IN TAPE

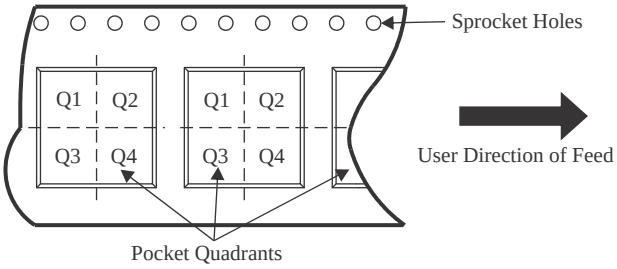

*All dimensions are nominal

Device	Package Type	Package Drawing	Pins	SPQ	Reel Diameter (mm)	Reel Width W1 (mm)	A0 (mm)	B0 (mm)	K0 (mm)	P1 (mm)	W (mm)	Pin1 Quadrant
SN74ALS574BDWR	SOIC	DW	20	2000	330.0	24.4	10.8	13.3	2.7	12.0	24.0	Q1
SN74ALS574BNSR	SOP	NS	20	2000	330.0	24.4	8.4	13.0	2.5	12.0	24.0	Q1
SN74AS574DWR	SOIC	DW	20	2000	330.0	24.4	10.8	13.3	2.7	12.0	24.0	Q1

TAPE AND REEL BOX DIMENSIONS

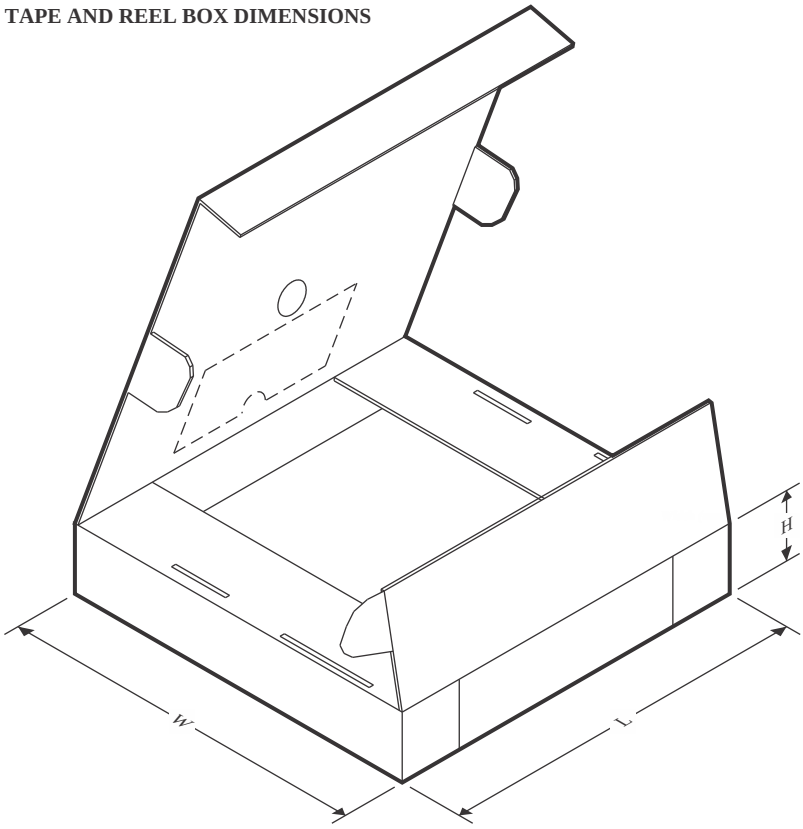

*All dimensions are nominal

Device	Package Type	Package Drawing	Pins	SPQ	Length (mm)	Width (mm)	Height (mm)
SN74ALS574BDWR	SOIC	DW	20	2000	367.0	367.0	45.0
SN74ALS574BNSR	SOP	NS	20	2000	367.0	367.0	45.0
SN74AS574DWR	SOIC	DW	20	2000	367.0	367.0	45.0

TUBE

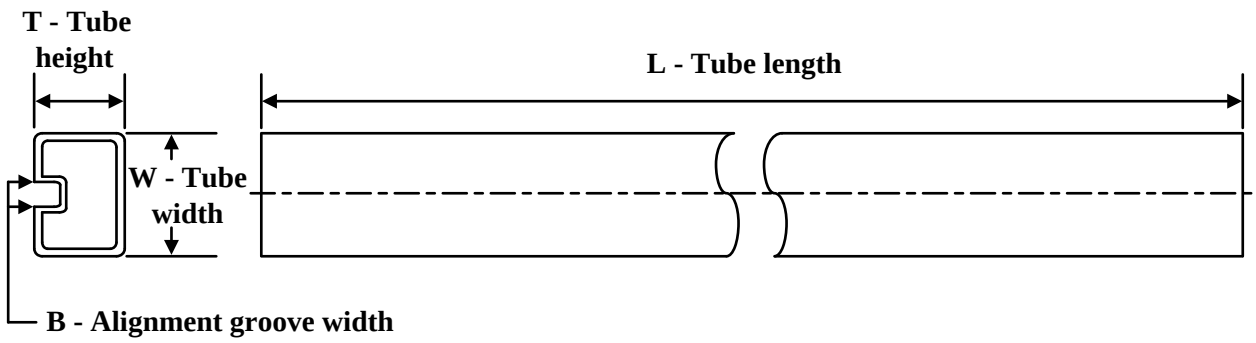

*All dimensions are nominal

Device	Package Name	Package Type	Pins	SPQ	L (mm)	W (mm)	T (µm)	B (mm)
84001012A	FK	LCCC	20	55	506.98	12.06	2030	NA
8400101SA	W	CFP	20	25	506.98	26.16	6220	NA
JM38510/37104B2A	FK	LCCC	20	55	506.98	12.06	2030	NA
JM38510/37104B2A.A	FK	LCCC	20	55	506.98	12.06	2030	NA
M38510/37104B2A	FK	LCCC	20	55	506.98	12.06	2030	NA
SN74ALS574BN	N	PDIP	20	20	506	13.97	11230	4.32
SN74ALS574BN.A	N	PDIP	20	20	506	13.97	11230	4.32
SN74ALS574BNE4	N	PDIP	20	20	506	13.97	11230	4.32
SN74ALS575ADW	DW	SOIC	24	25	506.98	12.7	4826	6.6
SN74ALS575ADW.A	DW	SOIC	24	25	506.98	12.7	4826	6.6
SN74AS574N	N	PDIP	20	20	506	13.97	11230	4.32
SN74AS574N.A	N	PDIP	20	20	506	13.97	11230	4.32
SNJ54ALS574BFK	FK	LCCC	20	55	506.98	12.06	2030	NA
SNJ54ALS574BFK.A	FK	LCCC	20	55	506.98	12.06	2030	NA
SNJ54ALS574BW	W	CFP	20	25	506.98	26.16	6220	NA
SNJ54ALS574BW.A	W	CFP	20	25	506.98	26.16	6220	NA

W (R–GDFP–F20) CERAMIC DUAL FLATPACK

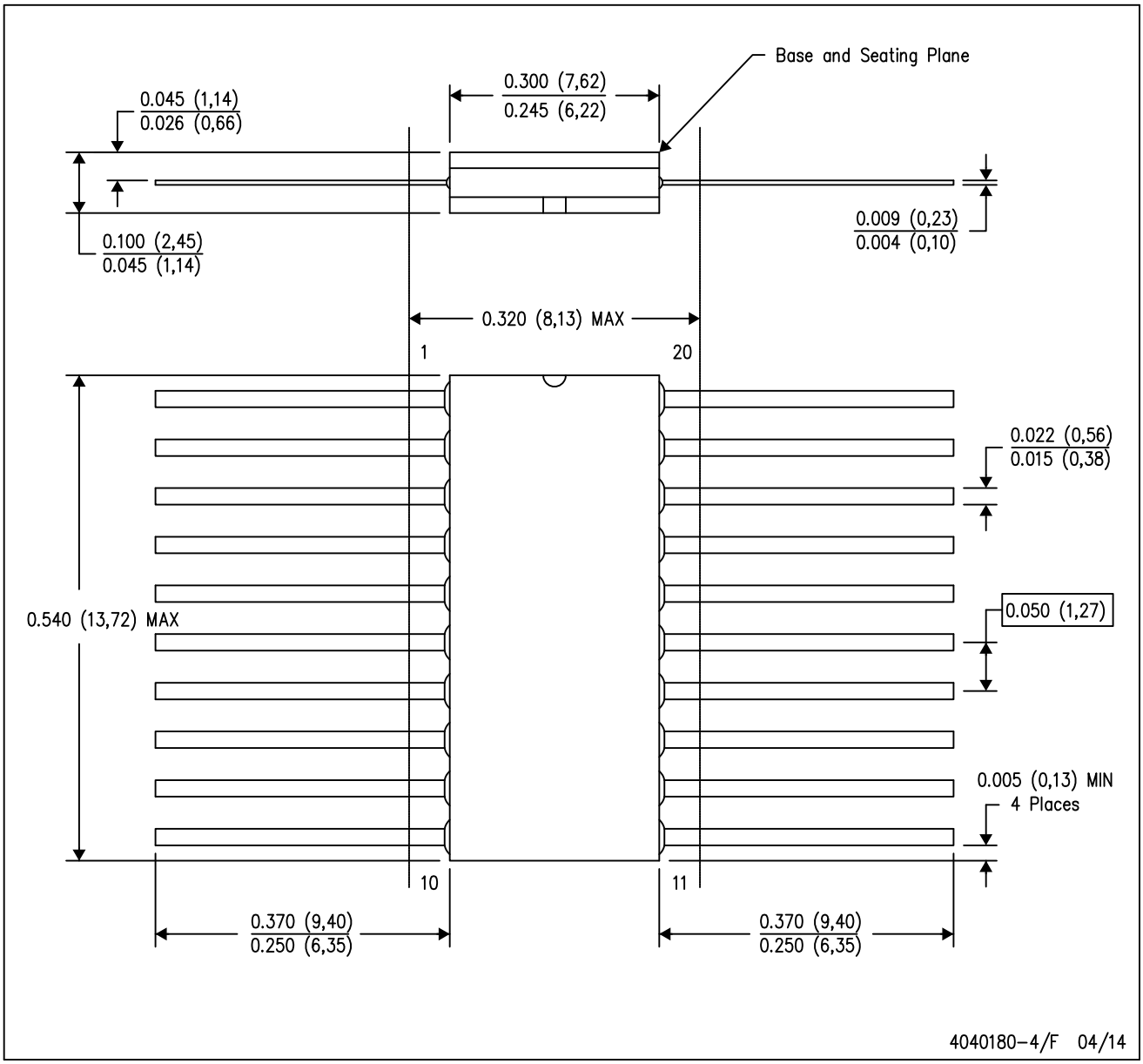

NOTES:
A. All linear dimensions are in inches (millimeters).
B. This drawing is subject to change without notice.
C. This package can be hermetically sealed with a ceramic lid using glass frit.
D. Index point is provided on cap for terminal identification only.
E. Falls within Mil–Std 1835 GDFP2–F20

MECHANICAL DATA

NS (R-PDSO-G)** **PLASTIC SMALL-OUTLINE PACKAGE**

14-PINS SHOWN

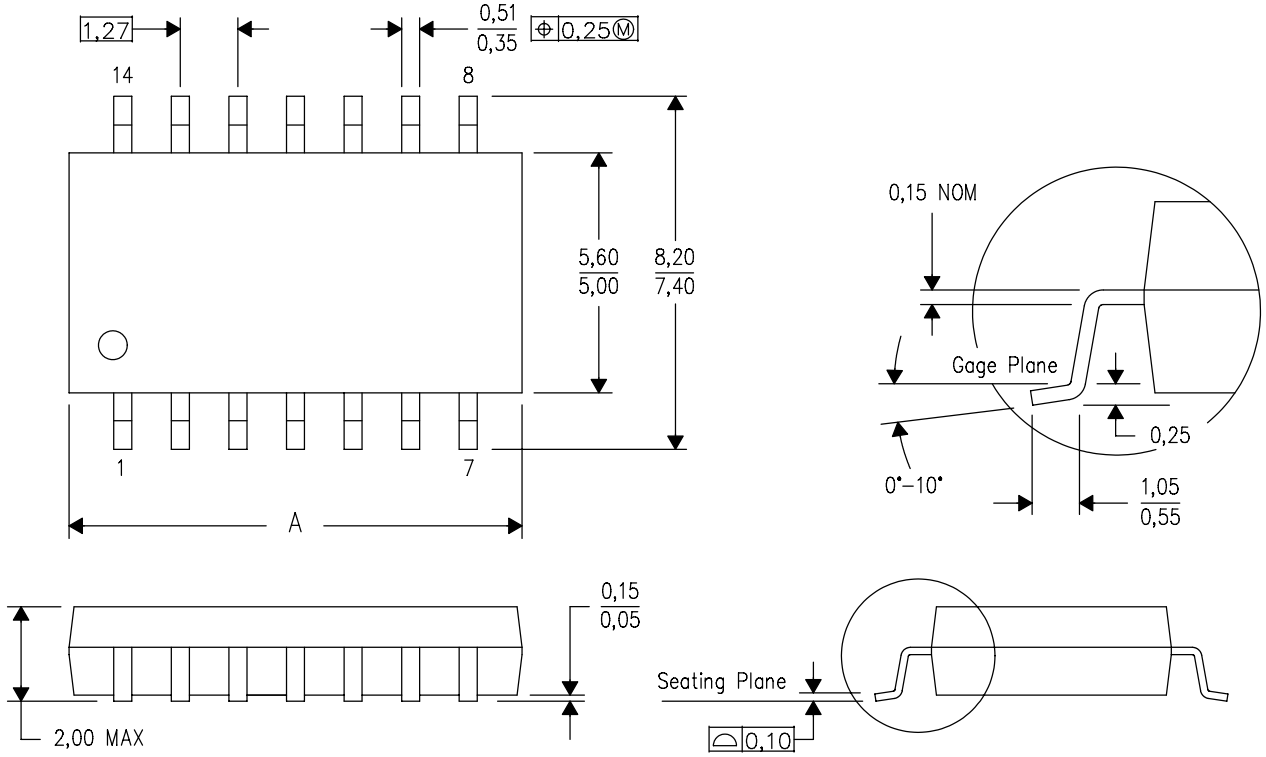

DIM \ PINS **	14	16	20	24
A MAX	10,50	10,50	12,90	15,30
A MIN	9,90	9,90	12,30	14,70

4040062/C 03/03

NOTES:
A. All linear dimensions are in millimeters.
B. This drawing is subject to change without notice.
C. Body dimensions do not include mold flash or protrusion, not to exceed 0,15.

J (R–GDIP–T**) CERAMIC DUAL IN–LINE PACKAGE

14 LEADS SHOWN

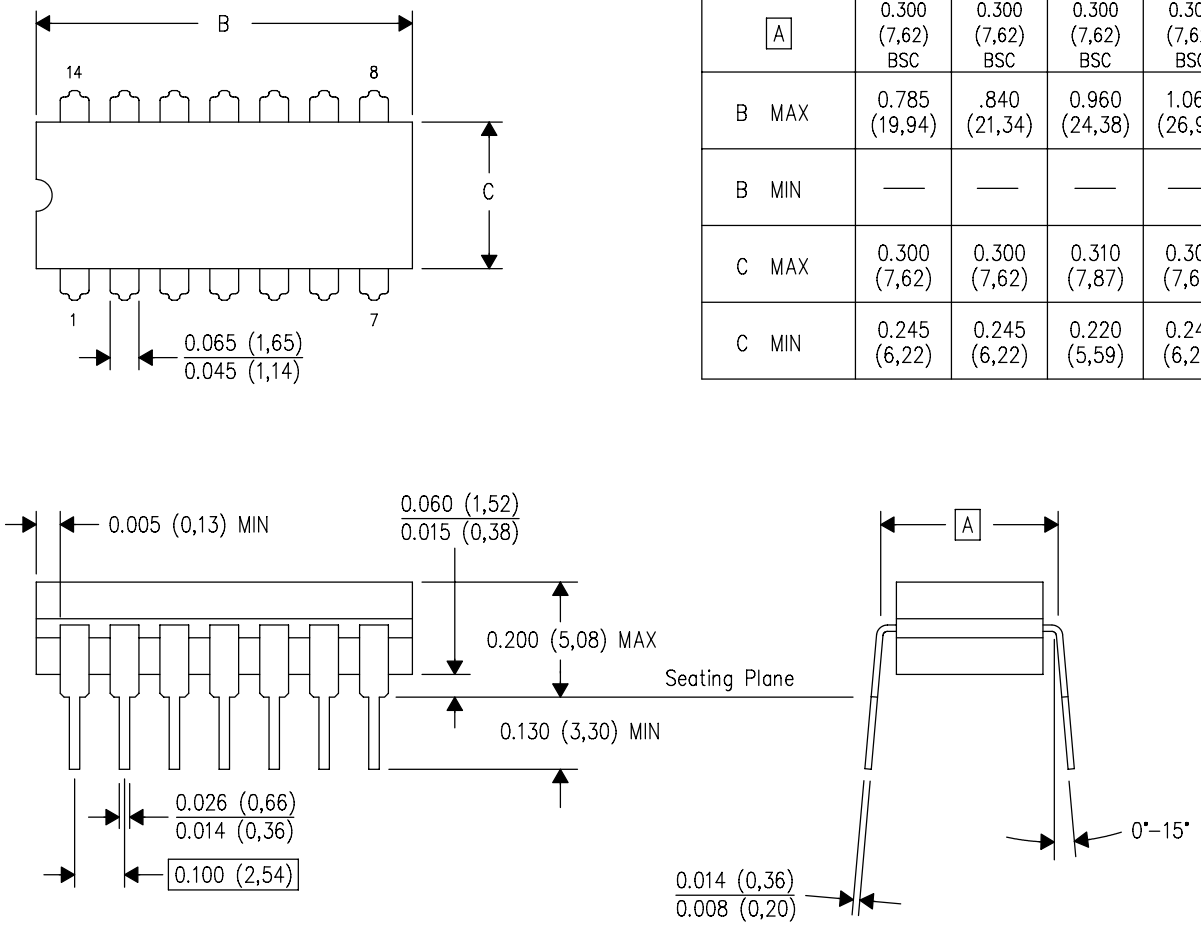

DIM \ PINS **	14	16	18	20
A	0.300 (7,62) BSC	0.300 (7,62) BSC	0.300 (7,62) BSC	0.300 (7,62) BSC
B MAX	0.785 (19,94)	.840 (21,34)	0.960 (24,38)	1.060 (26,92)
B MIN	—	—	—	—
C MAX	0.300 (7,62)	0.300 (7,62)	0.310 (7,87)	0.300 (7,62)
C MIN	0.245 (6,22)	0.245 (6,22)	0.220 (5,59)	0.245 (6,22)

4040083/F 03/03

NOTES:
- A. All linear dimensions are in inches (millimeters).
- B. This drawing is subject to change without notice.
- C. This package is hermetically sealed with a ceramic lid using glass frit.
- D. Index point is provided on cap for terminal identification only on press ceramic glass frit seal only.
- E. Falls within MIL STD 1835 GDIP1–T14, GDIP1–T16, GDIP1–T18 and GDIP1–T20.

DW (R–PDSO–G24) PLASTIC SMALL OUTLINE

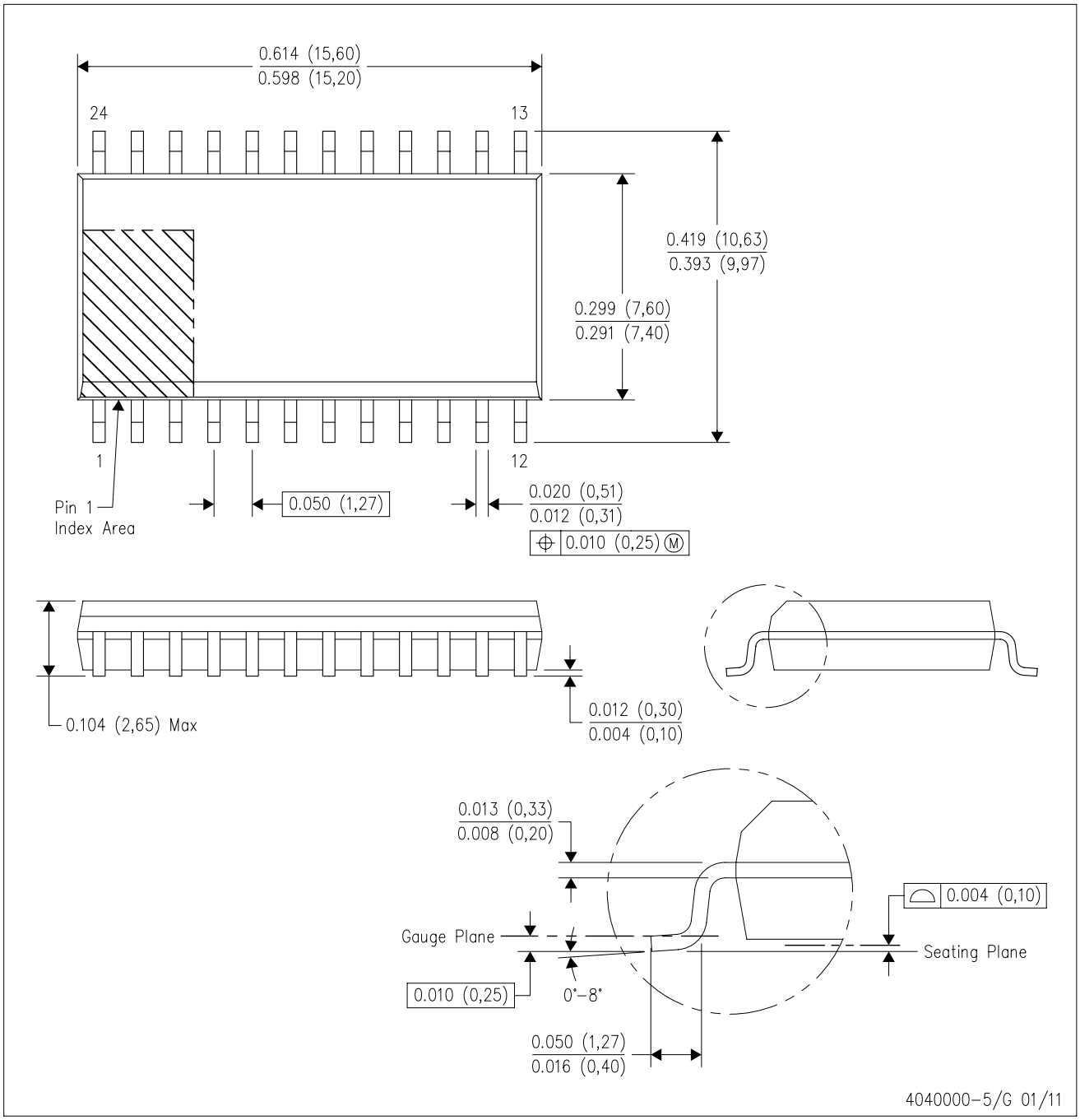

NOTES:
A. All linear dimensions are in inches (millimeters). Dimensioning and tolerancing per ASME Y14.5M–1994.
B. This drawing is subject to change without notice.
C. Body dimensions do not include mold flash or protrusion not to exceed 0.006 (0,15).
D. Falls within JEDEC MS–013 variation AD.

GENERIC PACKAGE VIEW

FK 20

LCCC - 2.03 mm max height

8.89 x 8.89, 1.27 mm pitch

LEADLESS CERAMIC CHIP CARRIER

This image is a representation of the package family, actual package may vary.
Refer to the product data sheet for package details.

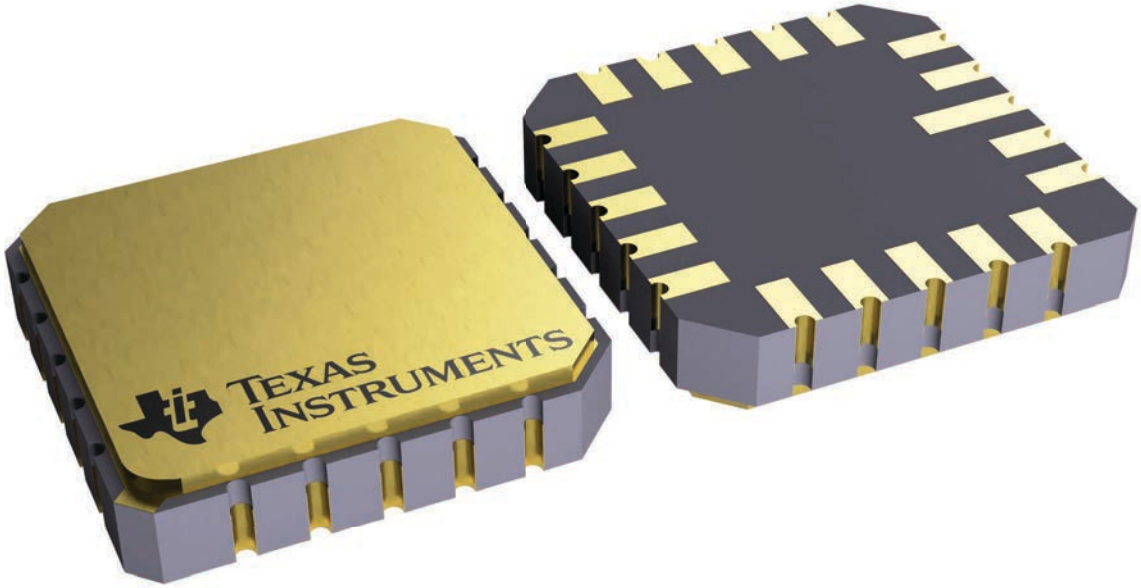

4229370VA\

N (R–PDIP–T**) PLASTIC DUAL–IN–LINE PACKAGE

16 PINS SHOWN

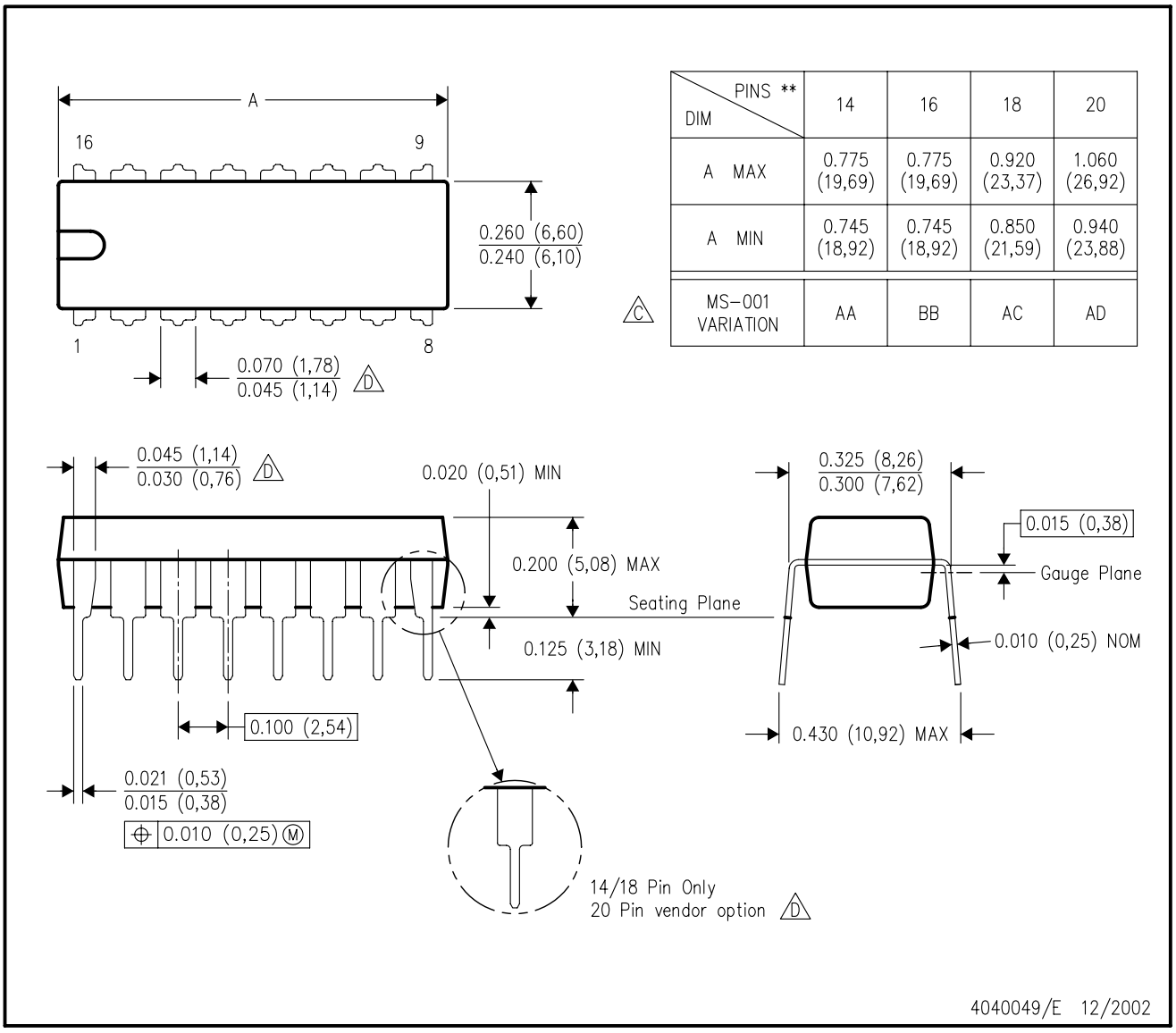

DIM \ PINS **	14	16	18	20
A MAX	0.775 (19,69)	0.775 (19,69)	0.920 (23,37)	1.060 (26,92)
A MIN	0.745 (18,92)	0.745 (18,92)	0.850 (21,59)	0.940 (23,88)
MS–001 VARIATION (C)	AA	BB	AC	AD

NOTES:
A. All linear dimensions are in inches (millimeters).
B. This drawing is subject to change without notice.
C. Falls within JEDEC MS–001, except 18 and 20 pin minimum body length (Dim A).
D. The 20 pin end lead shoulder width is a vendor option, either half or full width.

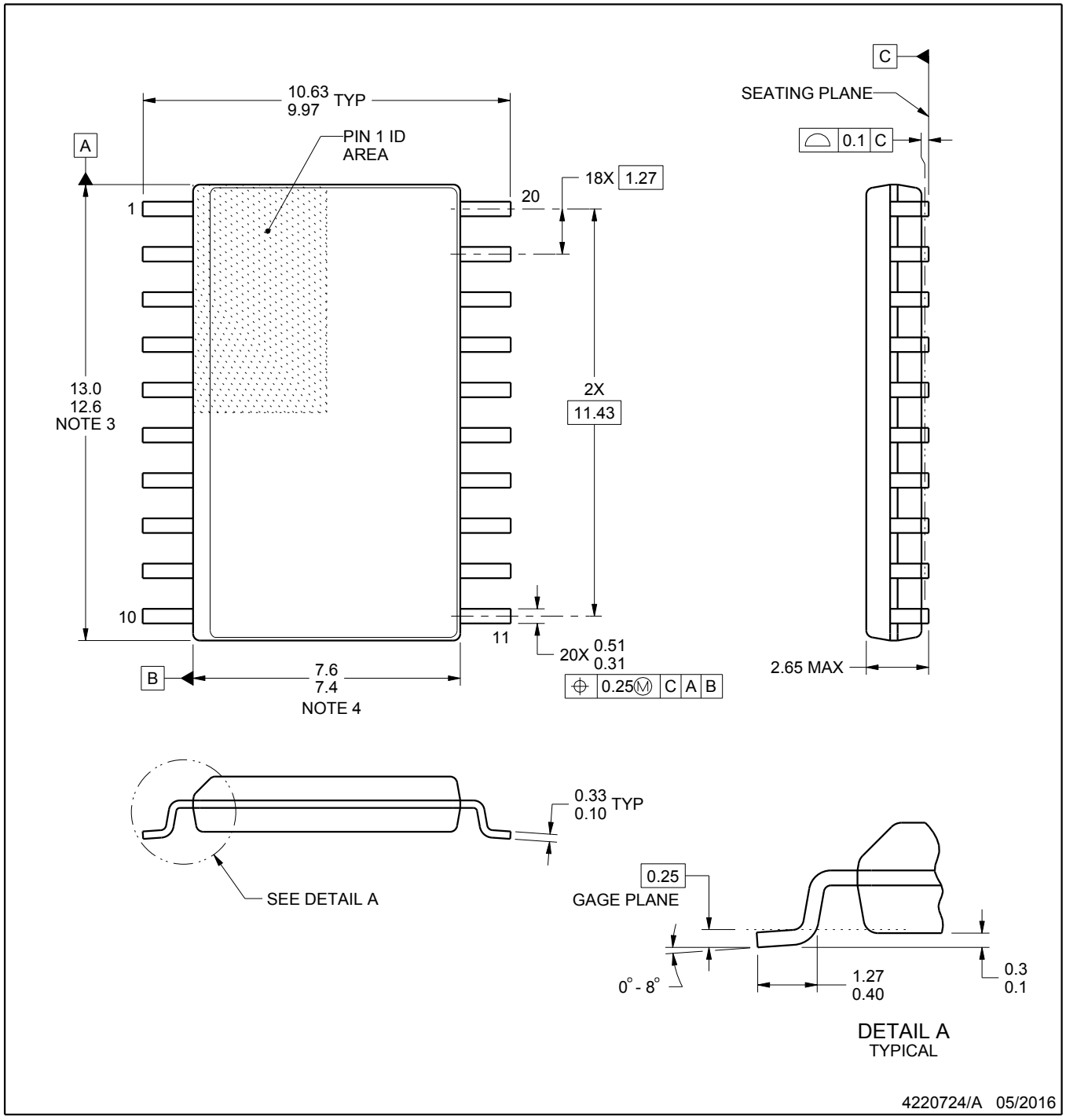

NOTES:

1. All linear dimensions are in millimeters. Dimensions in parenthesis are for reference only. Dimensioning and tolerancing per ASME Y14.5M.
2. This drawing is subject to change without notice.
3. This dimension does not include mold flash, protrusions, or gate burrs. Mold flash, protrusions, or gate burrs shall not exceed 0.15 mm per side.
4. This dimension does not include interlead flash. Interlead flash shall not exceed 0.43 mm per side.
5. Reference JEDEC registration MS-013.

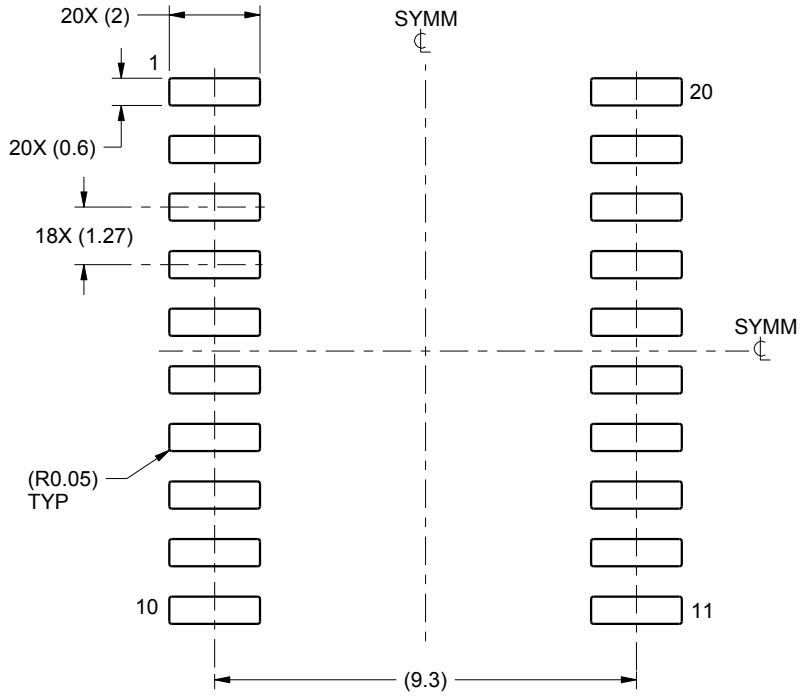

LAND PATTERN EXAMPLE
SCALE:6X

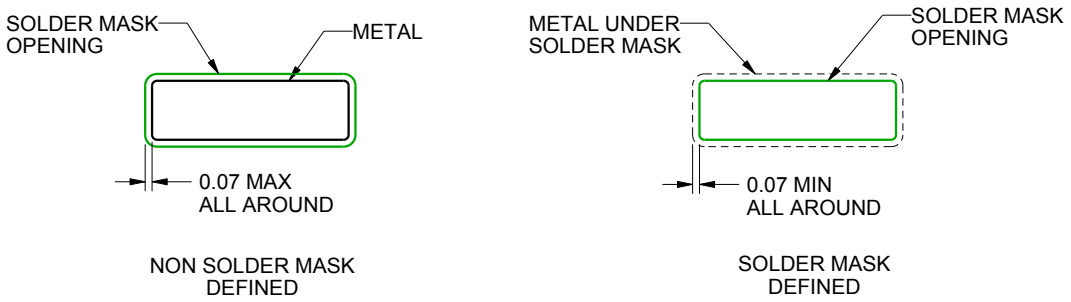

SOLDER MASK DETAILS

4220724/A 05/2016

NOTES: (continued)

6. Publication IPC-7351 may have alternate designs.
7. Solder mask tolerances between and around signal pads can vary based on board fabrication site.

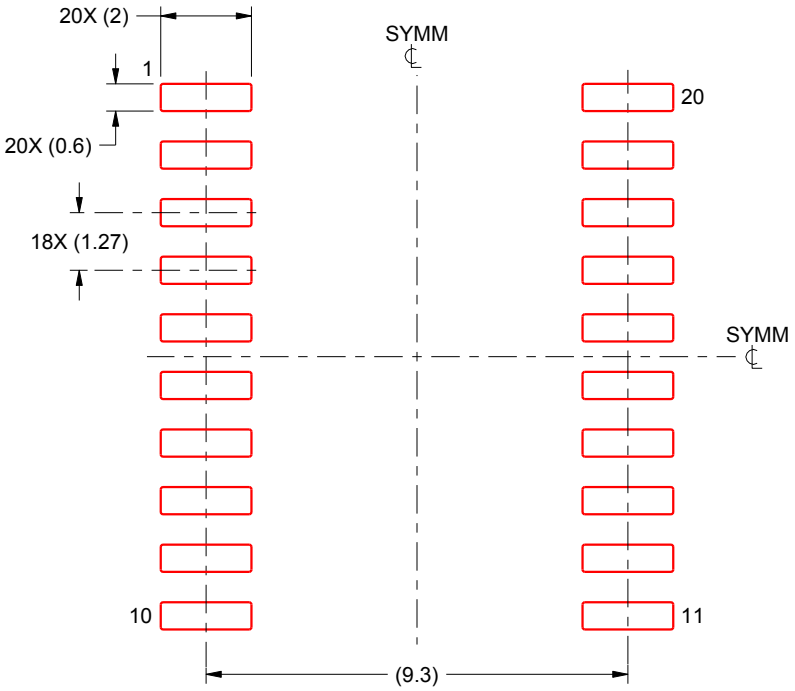

SOLDER PASTE EXAMPLE
BASED ON 0.125 mm THICK STENCIL
SCALE:6X

4220724/A 05/2016

NOTES: (continued)

8. Laser cutting apertures with trapezoidal walls and rounded corners may offer better paste release. IPC-7525 may have alternate design recommendations.
9. Board assembly site may have different recommendations for stencil design.

IMPORTANT NOTICE AND DISCLAIMER

TI PROVIDES TECHNICAL AND RELIABILITY DATA (INCLUDING DATA SHEETS), DESIGN RESOURCES (INCLUDING REFERENCE DESIGNS), APPLICATION OR OTHER DESIGN ADVICE, WEB TOOLS, SAFETY INFORMATION, AND OTHER RESOURCES “AS IS” AND WITH ALL FAULTS, AND DISCLAIMS ALL WARRANTIES, EXPRESS AND IMPLIED, INCLUDING WITHOUT LIMITATION ANY IMPLIED WARRANTIES OF MERCHANTABILITY, FITNESS FOR A PARTICULAR PURPOSE OR NON-INFRINGEMENT OF THIRD PARTY INTELLECTUAL PROPERTY RIGHTS.

These resources are intended for skilled developers designing with TI products. You are solely responsible for (1) selecting the appropriate TI products for your application, (2) designing, validating and testing your application, and (3) ensuring your application meets applicable standards, and any other safety, security, regulatory or other requirements.

These resources are subject to change without notice. TI grants you permission to use these resources only for development of an application that uses the TI products described in the resource. Other reproduction and display of these resources is prohibited. No license is granted to any other TI intellectual property right or to any third party intellectual property right. TI disclaims responsibility for, and you will fully indemnify TI and its representatives against, any claims, damages, costs, losses, and liabilities arising out of your use of these resources.

TI’s products are provided subject to TI’s Terms of Sale or other applicable terms available either on ti.com or provided in conjunction with such TI products. TI’s provision of these resources does not expand or otherwise alter TI’s applicable warranties or warranty disclaimers for TI products.

TI objects to and rejects any additional or different terms you may have proposed.

Mailing Address: Texas Instruments, Post Office Box 655303, Dallas, Texas 75265
Copyright © 2025, Texas Instruments Incorporated