TPS92663-Q1 High-Brightness LED Matrix Manager for Automotive Headlight Systems

1 Features

- AEC-Q100 Qualified for Automotive Applications
  - Device Temperature Grade 1: –40°C to 125°C, T_A
  - Device HBM Classification Level: H1C
  - Device CDM Classification Level: C5
- Input Voltage Range: 4.5 V to 60 V
- Six Integrated Bypass Switches
  - Two Sub-Strings of Three Series Switches
  - 20 V (Maximum) Across Switch
  - 62 V (Maximum) Switch to GND
- Multi-Drop UART Communication Interface
  - Up to 16 Addressable Devices
  - Integrates on same bus with the TPS92662
- Compatible with CAN Physical Layer
  - Minimum Number of Wires in Cable Harness
- 8-bit ADC with Two MUX Inputs
- Crystal Oscillator Driver
- Programmable 10-bit PWM Dimming
  - Individual Phase Shift and Pulse Width
  - Device-to-device Synchronization
- LED Open and Short Detection and Protection

2 Applications

- Automotive headlight systems
- High-Brightness LED Matrix Systems
- ADB or Glare-Free High Beam

3 Description

The TPS92663-Q1 LED matrix manager device enables fully dynamic adaptive lighting solutions by providing individual pixel-level LED control.

The device includes two sub-strings of three series-connected integrated switches for bypassing individual LEDs. The individual sub-strings allow the device to accept either single or multiple current sources. It also allows a parallel connection of two switches to bypass high-current LEDs.

A master microcontroller may be used to control and manage the TPS92663-Q1 devices via a multi-drop universal asynchronous receiver transmitter (UART) serial interface. The serial interface supports the use of CAN transceivers for a more robust physical layer. An application can use the TPS92663-Q1 device and the TPS92662-Q1 device on the same bus.

An on-device, 8 bit ADC with two multiplexed inputs can be used for system temperature compensation and used to measure a binning value which allows for LED binning and coding.

The internal charge pump rail supplies the gate drive voltage for the LED bypass switches. The low on-resistance ($R_{DS(on)}$) of the bypass switch minimizes conduction loss and power dissipation.

The phase shift and pulse width for each individual LED in the string are programmable. The device uses an internal register to adjust the PWM frequency. Multiple devices can be synchronized. The switch transitions during PWM dimming operation have a programmable slew rate to mitigate EMI concerns.

The device features open LED protection with programmable threshold. The serial interface reports open LED and short LED faults.

Device Information(1)

PART NUMBER	PACKAGE	BODY SIZE (NOM)
TPS92663-Q1	PWP (24)	7.70 mm × 4.40 mm

(1) For all available packages, see the orderable addendum at the end of the data sheet.

Simplified Application

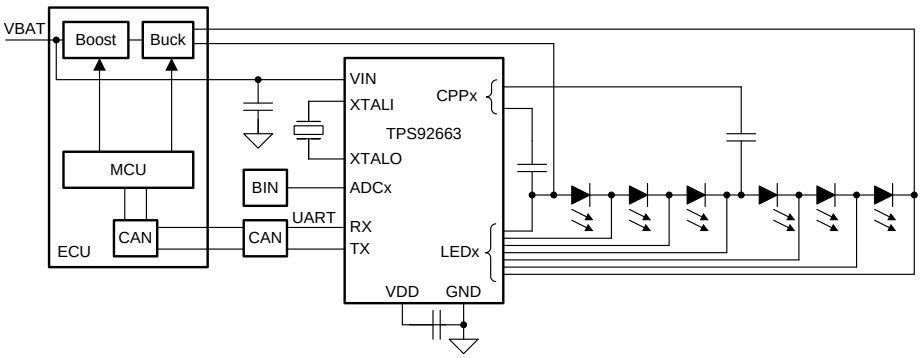

An IMPORTANT NOTICE at the end of this data sheet addresses availability, warranty, changes, use in safety-critical applications, intellectual property matters and other important disclaimers. PRODUCTION DATA.

Table of Contents

1 Features 1
2 Applications 1
3 Description 1
4 Revision History 2
5 Device and Documentation Support 3
5.1 Receiving Notification of Documentation Updates 3
5.2 Community Resources 3
5.3 Trademarks 3
5.4 Electrostatic Discharge Caution 3
5.5 Glossary 3
6 Mechanical, Packaging, and Orderable Information 4

4 Revision History

NOTE: Page numbers for previous revisions may differ from page numbers in the current version.

DATE	REVISION	NOTES
July 2018	*	Initial release.

Copyright © 2018, Texas Instruments Incorporated

5 Device and Documentation Support

5.1 Receiving Notification of Documentation Updates

To receive notification of documentation updates, navigate to the device product folder on ti.com. In the upper right corner, click on *Alert me* to register and receive a weekly digest of any product information that has changed. For change details, review the revision history included in any revised document.

5.2 Community Resources

The following links connect to TI community resources. Linked contents are provided "AS IS" by the respective contributors. They do not constitute TI specifications and do not necessarily reflect TI's views; see TI's Terms of Use.

TI E2E™ Online Community ***TI's Engineer-to-Engineer (E2E) Community.*** Created to foster collaboration among engineers. At e2e.ti.com, you can ask questions, share knowledge, explore ideas and help solve problems with fellow engineers.

Design Support ***TI's Design Support*** Quickly find helpful E2E forums along with design support tools and contact information for technical support.

5.3 Trademarks

E2E is a trademark of Texas Instruments.

5.4 Electrostatic Discharge Caution

This integrated circuit can be damaged by ESD. Texas Instruments recommends that all integrated circuits be handled with appropriate precautions. Failure to observe proper handling and installation procedures can cause damage.

ESD damage can range from subtle performance degradation to complete device failure. Precision integrated circuits may be more susceptible to damage because very small parametric changes could cause the device not to meet its published specifications.

5.5 Glossary

SLYZ022 — *TI Glossary*.

This glossary lists and explains terms, acronyms, and definitions.

6 Mechanical, Packaging, and Orderable Information

The following pages include mechanical, packaging, and orderable information. This information is the most current data available for the designated devices. This data is subject to change without notice and revision of this document. For browser-based versions of this data sheet, refer to the left-hand navigation.

Copyright © 2018, Texas Instruments Incorporated

PACKAGING INFORMATION

Orderable part number	Status (1)	Material type (2)	Package | Pins	Package qty | Carrier	RoHS (3)	Lead finish/ Ball material (4)	MSL rating/ Peak reflow (5)	Op temp (°C)	Part marking (6)
TPS92663QPWPRQ1	Active	Production	HTSSOP (PWP) | 24	2000 | LARGE T&R	Yes	NIPDAU	Level-3-260C-168 HR	-40 to 125	TPS92663Q
TPS92663QPWPRQ1.A	Active	Production	HTSSOP (PWP) | 24	2000 | LARGE T&R	Yes	NIPDAU	Level-3-260C-168 HR	-40 to 125	TPS92663Q
TPS92663QPWPTQ1	Active	Production	HTSSOP (PWP) | 24	250 | SMALL T&R	Yes	NIPDAU	Level-3-260C-168 HR	-40 to 125	TPS92663Q
TPS92663QPWPTQ1.A	Active	Production	HTSSOP (PWP) | 24	250 | SMALL T&R	Yes	NIPDAU	Level-3-260C-168 HR	-40 to 125	TPS92663Q

(1) **Status:** For more details on status, see our product life cycle.

(2) **Material type:** When designated, preproduction parts are prototypes/experimental devices, and are not yet approved or released for full production. Testing and final process, including without limitation quality assurance, reliability performance testing, and/or process qualification, may not yet be complete, and this item is subject to further changes or possible discontinuation. If available for ordering, purchases will be subject to an additional waiver at checkout, and are intended for early internal evaluation purposes only. These items are sold without warranties of any kind.

(3) **RoHS values:** Yes, No, RoHS Exempt. See the TI RoHS Statement for additional information and value definition.

(4) **Lead finish/Ball material:** Parts may have multiple material finish options. Finish options are separated by a vertical ruled line. Lead finish/Ball material values may wrap to two lines if the finish value exceeds the maximum column width.

(5) **MSL rating/Peak reflow:** The moisture sensitivity level ratings and peak solder (reflow) temperatures. In the event that a part has multiple moisture sensitivity ratings, only the lowest level per JEDEC standards is shown. Refer to the shipping label for the actual reflow temperature that will be used to mount the part to the printed circuit board.

(6) **Part marking:** There may be an additional marking, which relates to the logo, the lot trace code information, or the environmental category of the part.

Multiple part markings will be inside parentheses. Only one part marking contained in parentheses and separated by a "~" will appear on a part. If a line is indented then it is a continuation of the previous line and the two combined represent the entire part marking for that device.

Important Information and Disclaimer: The information provided on this page represents TI's knowledge and belief as of the date that it is provided. TI bases its knowledge and belief on information provided by third parties, and makes no representation or warranty as to the accuracy of such information. Efforts are underway to better integrate information from third parties. TI has taken and continues to take reasonable steps to provide representative and accurate information but may not have conducted destructive testing or chemical analysis on incoming materials and chemicals. TI and TI suppliers consider certain information to be proprietary, and thus CAS numbers and other limited information may not be available for release.

In no event shall TI's liability arising out of such information exceed the total purchase price of the TI part(s) at issue in this document sold by TI to Customer on an annual basis.

TAPE AND REEL INFORMATION

REEL DIMENSIONS

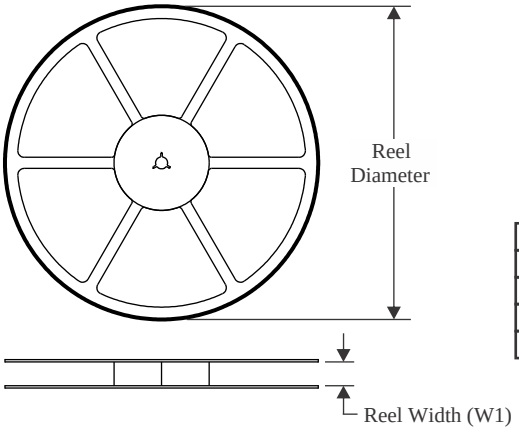

TAPE DIMENSIONS

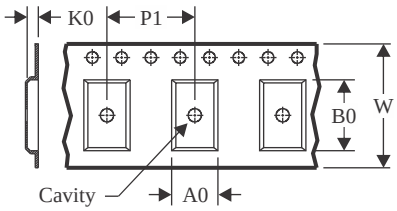

A0	Dimension designed to accommodate the component width
B0	Dimension designed to accommodate the component length
K0	Dimension designed to accommodate the component thickness
W	Overall width of the carrier tape
P1	Pitch between successive cavity centers

QUADRANT ASSIGNMENTS FOR PIN 1 ORIENTATION IN TAPE

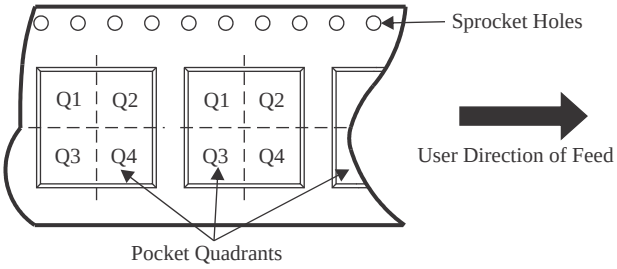

*All dimensions are nominal

Device	Package Type	Package Drawing	Pins	SPQ	Reel Diameter (mm)	Reel Width W1 (mm)	A0 (mm)	B0 (mm)	K0 (mm)	P1 (mm)	W (mm)	Pin1 Quadrant
TPS92663QPWPRQ1	HTSSOP	PWP	24	2000	330.0	16.4	6.95	8.3	1.6	8.0	16.0	Q1

TAPE AND REEL BOX DIMENSIONS

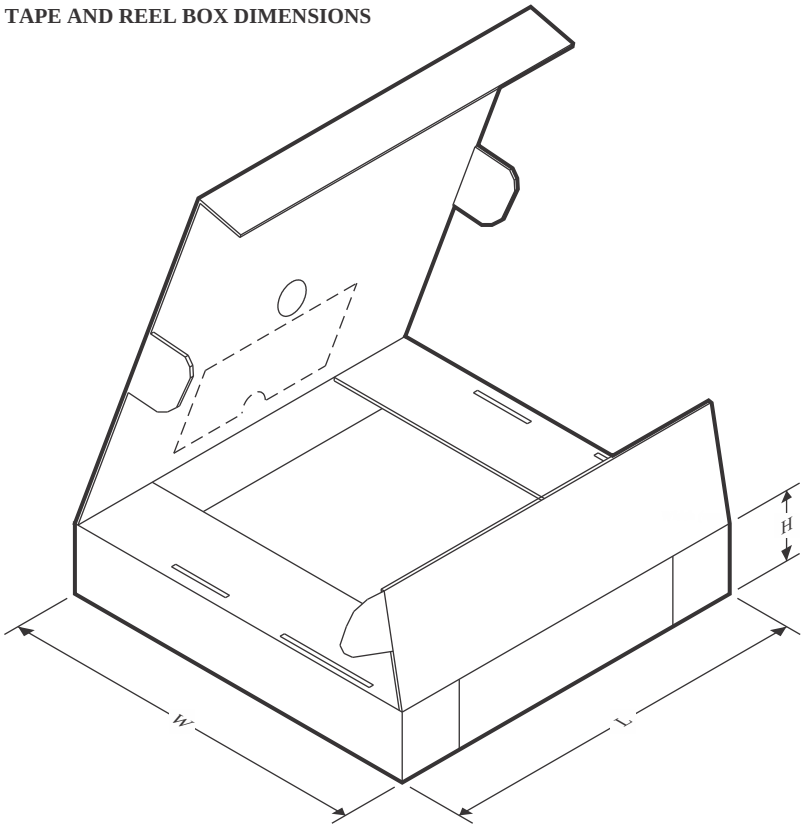

*All dimensions are nominal

Device	Package Type	Package Drawing	Pins	SPQ	Length (mm)	Width (mm)	Height (mm)
TPS92663QPWPRQ1	HTSSOP	PWP	24	2000	350.0	350.0	43.0

GENERIC PACKAGE VIEW

PWP 24

PowerPAD™ TSSOP - 1.2 mm max height

4.4 x 7.6, 0.65 mm pitch

PLASTIC SMALL OUTLINE

This image is a representation of the package family, actual package may vary.
Refer to the product data sheet for package details.

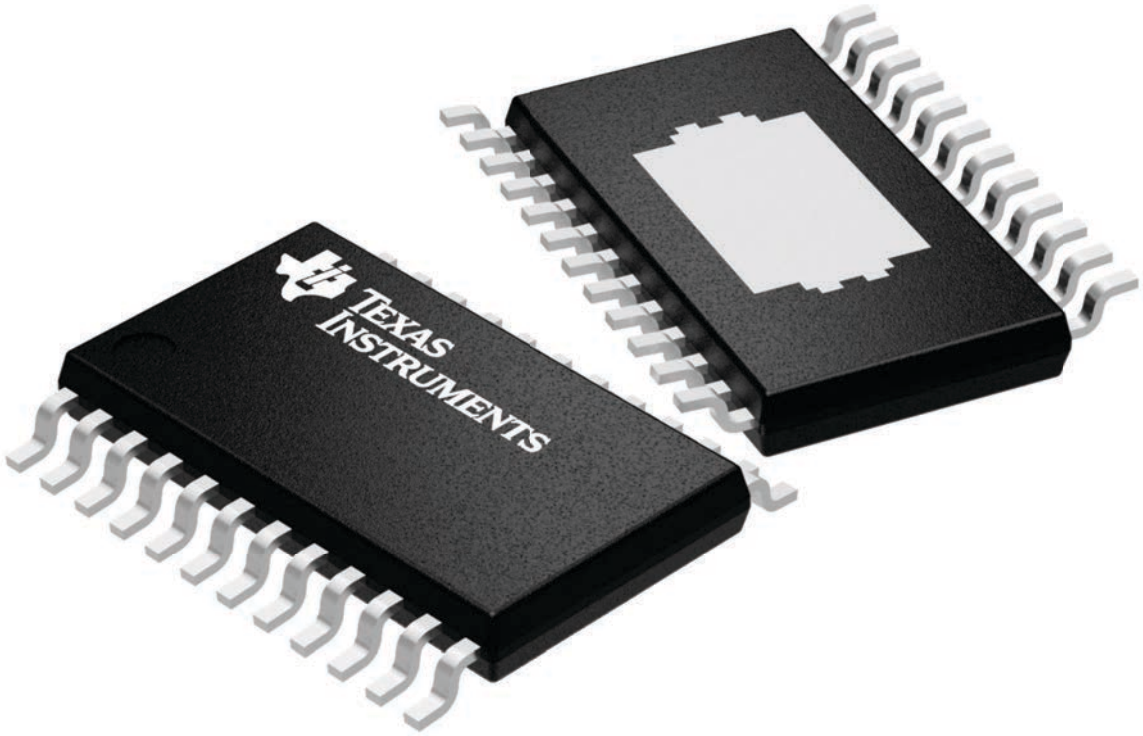

4224742/B

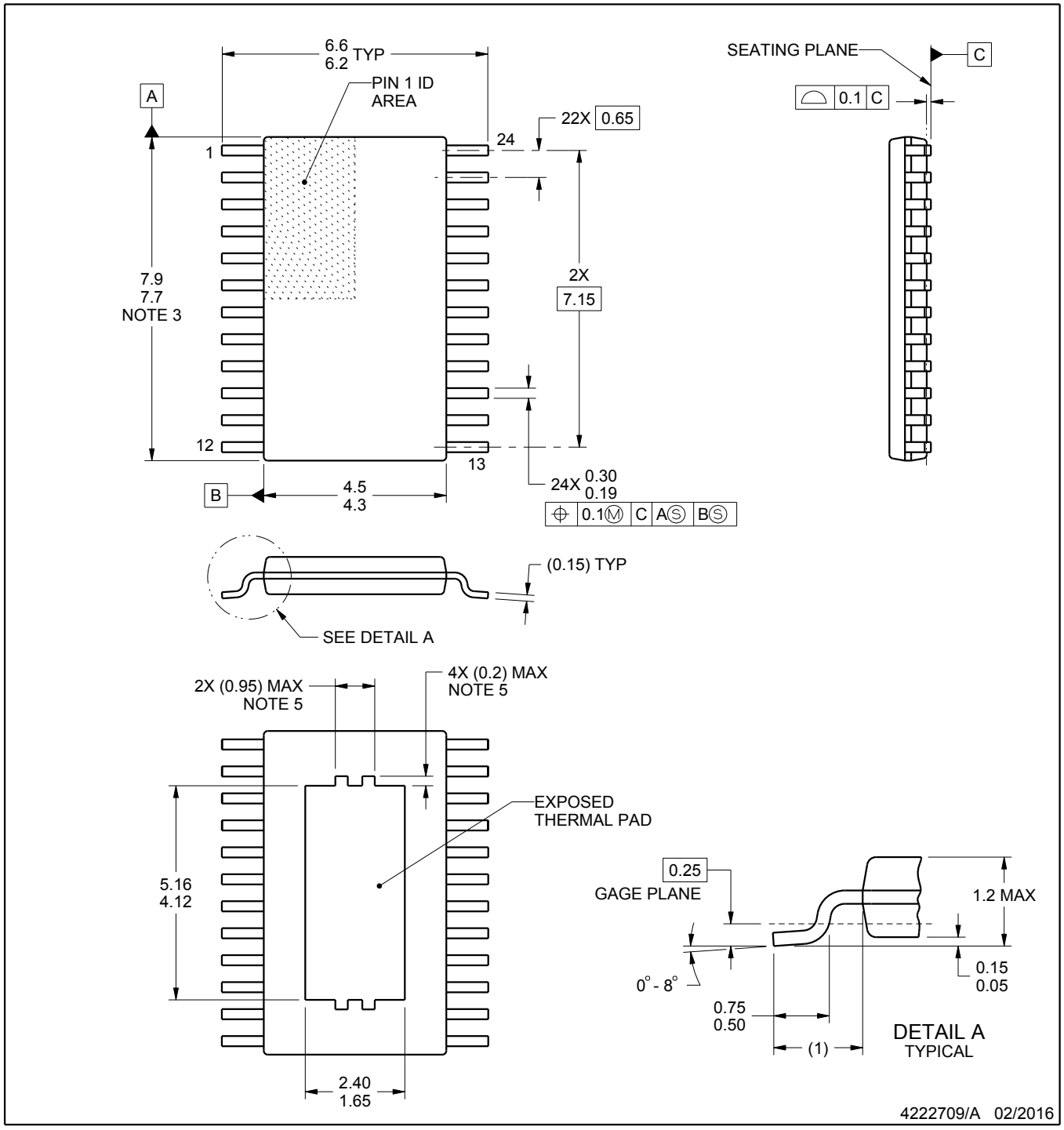

PowerPAD is a trademark of Texas Instruments.

NOTES:

1. All linear dimensions are in millimeters. Any dimensions in parenthesis are for reference only. Dimensioning and tolerancing per ASME Y14.5M.
2. This drawing is subject to change without notice.
3. This dimension does not include mold flash, protrusions, or gate burrs. Mold flash, protrusions, or gate burrs shall not exceed 0.15 mm per side.
4. Reference JEDEC registration MO-153.
5. Features may not be present and may vary.

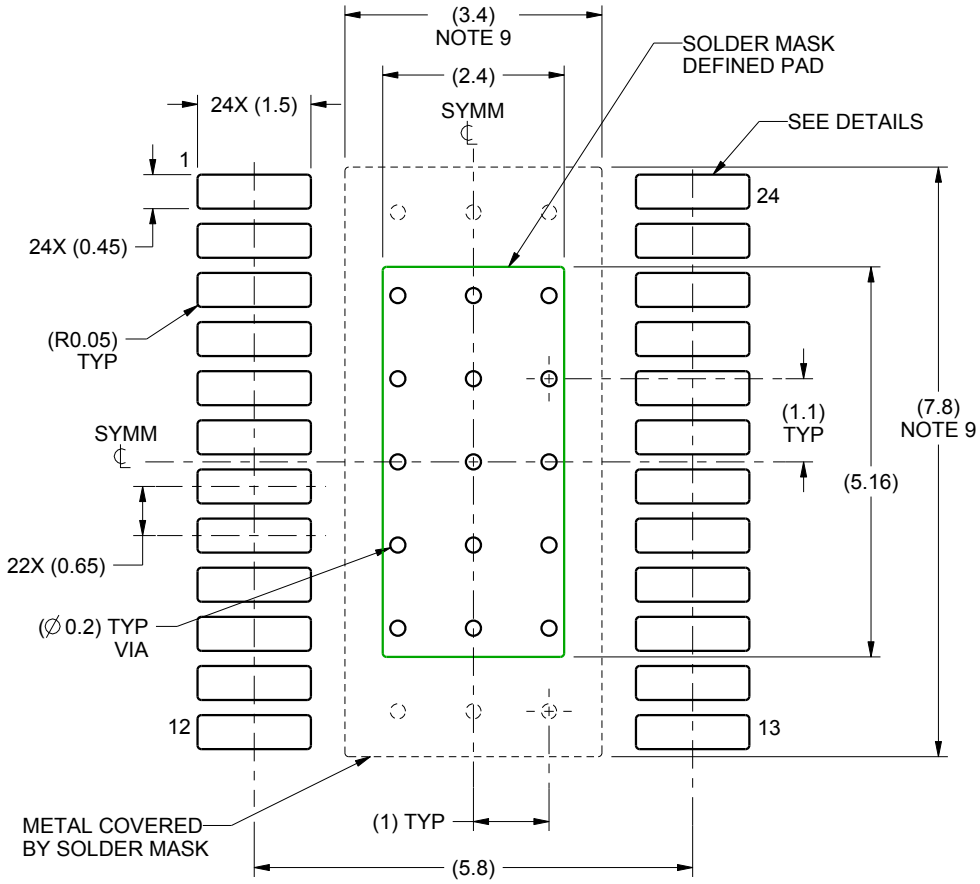

LAND PATTERN EXAMPLE
SCALE:10X

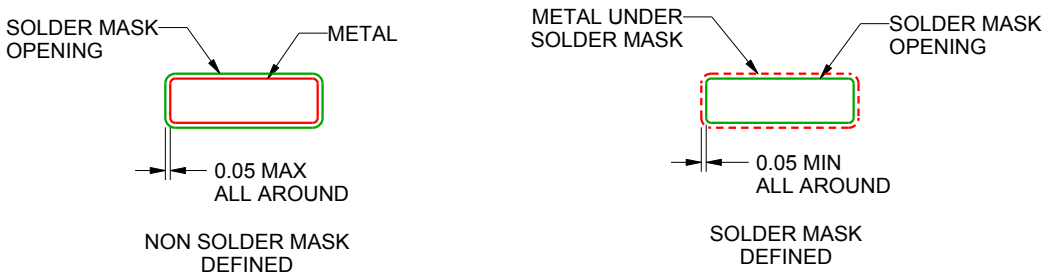

SOLDER MASK DETAILS
PADS 1-24

4222709/A 02/2016

NOTES: (continued)

6. Publication IPC-7351 may have alternate designs.
7. Solder mask tolerances between and around signal pads can vary based on board fabrication site.
8. This package is designed to be soldered to a thermal pad on the board. For more information, see Texas Instruments literature numbers SLMA002 (www.ti.com/lit/slma002) and SLMA004 (www.ti.com/lit/slma004).
9. Size of metal pad may vary due to creepage requirement.

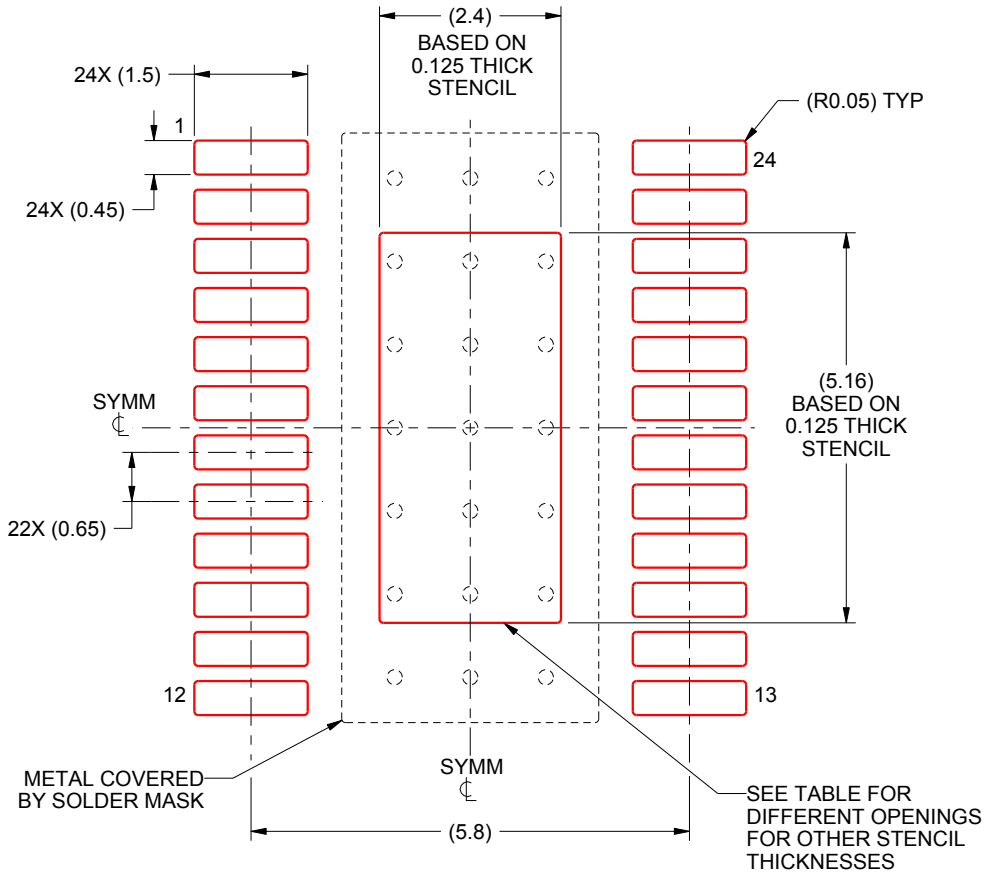

SOLDER PASTE EXAMPLE
EXPOSED PAD
100% PRINTED SOLDER COVERAGE BY AREA
SCALE:10X

STENCIL THICKNESS	SOLDER STENCIL OPENING
0.1	2.68 X 5.77
0.125	2.4 X 5.16 (SHOWN)
0.15	2.19 X 4.71
0.175	2.03 X 4.36

4222709/A 02/2016

NOTES: (continued)

10. Laser cutting apertures with trapezoidal walls and rounded corners may offer better paste release. IPC-7525 may have alternate design recommendations.
11. Board assembly site may have different recommendations for stencil design.

IMPORTANT NOTICE AND DISCLAIMER

TI PROVIDES TECHNICAL AND RELIABILITY DATA (INCLUDING DATA SHEETS), DESIGN RESOURCES (INCLUDING REFERENCE DESIGNS), APPLICATION OR OTHER DESIGN ADVICE, WEB TOOLS, SAFETY INFORMATION, AND OTHER RESOURCES “AS IS” AND WITH ALL FAULTS, AND DISCLAIMS ALL WARRANTIES, EXPRESS AND IMPLIED, INCLUDING WITHOUT LIMITATION ANY IMPLIED WARRANTIES OF MERCHANTABILITY, FITNESS FOR A PARTICULAR PURPOSE OR NON-INFRINGEMENT OF THIRD PARTY INTELLECTUAL PROPERTY RIGHTS.

These resources are intended for skilled developers designing with TI products. You are solely responsible for (1) selecting the appropriate TI products for your application, (2) designing, validating and testing your application, and (3) ensuring your application meets applicable standards, and any other safety, security, regulatory or other requirements.

These resources are subject to change without notice. TI grants you permission to use these resources only for development of an application that uses the TI products described in the resource. Other reproduction and display of these resources is prohibited. No license is granted to any other TI intellectual property right or to any third party intellectual property right. TI disclaims responsibility for, and you will fully indemnify TI and its representatives against, any claims, damages, costs, losses, and liabilities arising out of your use of these resources.

TI’s products are provided subject to TI’s Terms of Sale or other applicable terms available either on ti.com or provided in conjunction with such TI products. TI’s provision of these resources does not expand or otherwise alter TI’s applicable warranties or warranty disclaimers for TI products.

TI objects to and rejects any additional or different terms you may have proposed.

Mailing Address: Texas Instruments, Post Office Box 655303, Dallas, Texas 75265
Copyright © 2025, Texas Instruments Incorporated