2.25MHz 2x800mA Dual Step Down Converter In Small 3x3mm QFN Package

Check for Samples: TPS62410-Q1

FEATURES

- **Qualified for Automotive Applications**
- **High Efficiency—up to 95%**
- **V_{IN} Range From 2.5 V to 6 V**
- **2.25 MHz Fixed Frequency Operation**
- **Output Current 2 x 800mA**
- **Adjustable Output Voltage From 0.6 V to V_{IN}**
- **EasyScale™ Optional One Pin Serial Interface for Dynamic Output Voltage Adjustment**
- **Power Save Mode at Light Load Currents**
- **180° Out of Phase Operation**
- **Output Voltage Accuracy in PWM Mode ±1%**
- **Typical 32 µA Quiescent Current for both Converters**
- **100% Duty Cycle for Lowest Dropout**
- **Available in a 10-Pin QFN (3×3mm)**

DESCRIPTION

The TPS62410 device is a synchronous dual step-down DC-DC converter optimized for battery powered portable applications. It provides two independent output voltage rails powered by 1-cell Li-Ion or 3-cell NiMH/NiCD batteries. The device is also suitable to operate from a standard 3.3V or 5V voltage rail.

With an input voltage range of 2.5V to 6V, the TPS62410 is ideal to power portable applications like smart phones, PDAs, and other portable equipment.

With the EasyScale™ serial interface the output voltages can be modified during operation. It therefore supports Dynamic Voltage Scaling for low power DSP and processors.

The TPS62410 operates at 2.25MHz fixed switching frequency and enter the Power Save Mode operation at light load currents to maintain high efficiency over the entire load current range. For low noise applications the devices can be forced into fixed frequency PWM mode by pulling the MODE/DATA pin high. In the shutdown mode, the current consumption is reduced to 1.2µA. The device allows the use of small inductors and capacitors to achieve a small solution size.

The TPS62410 is available in a 10-pin leadless package (3×3mm QFN).

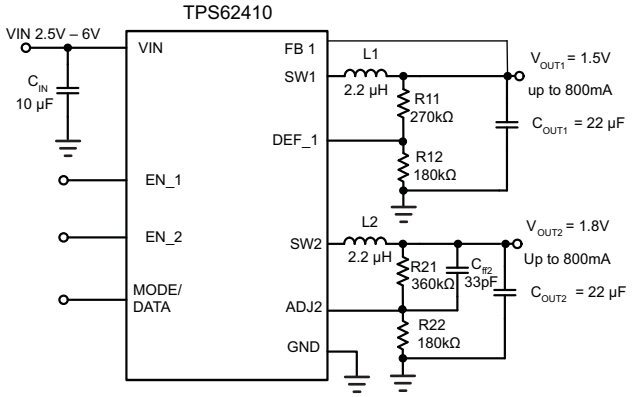

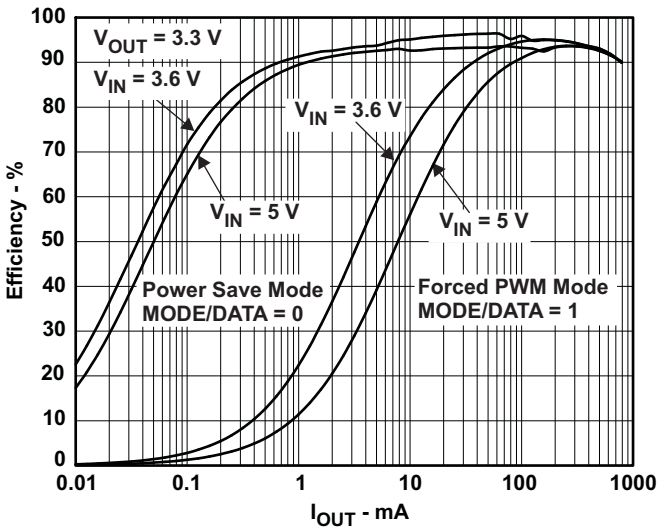

Please be aware that an important notice concerning availability, standard warranty, and use in critical applications of Texas Instruments semiconductor products and disclaimers thereto appears at the end of this data sheet.

EasyScale, PowerPAD are trademarks of Texas Instruments.

PRODUCTION DATA information is current as of publication date. Products conform to specifications per the terms of the Texas Instruments standard warranty. Production processing does not necessarily include testing of all parameters.

Copyright © 2010, Texas Instruments Incorporated

ORDERING INFORMATION(1)

T_J	PACKAGE(2)		ORDERABLE PART NUMBER	TOP-SIDE MARKING
–40°C to 125°C	QFN – DRC	Reel of 3000	TPS62410QDRCRQ1	OFX

(1) For the most current package and ordering information, see the Package Option Addendum at the end of this document, or see the TI web site at www.ti.com.
(2) Package drawings, thermal data, and symbolization are available at www.ti.com/packaging.

ABSOLUTE MAXIMUM RATINGS

over operating free-air temperature range (unless otherwise noted)(1)

			VALUE	UNIT
	Input voltage range on V_{IN} (2)		–0.3 to 7	V
	Voltage range on EN, MODE/DATA, DEF_1		–0.3 to V_{IN} +0.3, ≤7	V
	Maximum Current into MODE/DATA		500	µA
	Voltage on SW1, SW2		–0.3 to 7	V
	Voltage on ADJ2, FB1		–0.3 to V_{IN} +0.3, ≤7	V
	ESD rating(3)	Human-body model	2	kV
		Charged-device model	1	kV
		Machine model	200	V
$T_{J(max)}$	Maximum junction temperature		150	°C
T_{stg}	Storage temperature range		–65 to 150	°C

(1) Stresses beyond those listed under *absolute maximum ratings* may cause permanent damage to the device. These are stress ratings only, and functional operation of the device at these or any other conditions beyond those indicated under *recommended operating conditions* is not implied. Exposure to absolute–maximum–rated conditions for extended periods may affect device reliability.
(2) All voltage values are with respect to network ground terminal.
(3) The human body model is a 100pF capacitor discharged through a 1.5kΩ resistor into each pin. The machine model is a 200pF capacitor discharged directly into each pin.

DISSIPATION RATINGS

PACKAGE	$R_{\theta JA}$	POWER RATING FOR T_A ≤ 25°C	DERATING FACTOR ABOVE T_A = 25°C
DRC	49°C/W	2050mW	21mW/°C

RECOMMENDED OPERATING CONDITIONS

over operating free-air temperature range (unless otherwise noted)

		MIN	NOM	MAX	UNIT
VIN	Supply voltage	2.5		6	V
	Output voltage range for adjustable voltage	0.6		VIN	V
T_J	Operating junction temperature	-40		125	°C

Copyright © 2010, Texas Instruments Incorporated

ELECTRICAL CHARACTERISTICS

V_{IN} = 3.6V, V_{OUT} = 1.8V, EN = V_{IN}, MODE = GND, L = 2.2µH, C_{OUT} = 20µF, T_J = –40°C to 125°C, typical values are at T_A = 25°C (unless otherwise noted)

PARAMETER		TEST CONDITIONS	MIN	TYP	MAX	UNIT
SUPPLY CURRENT						
V_{IN}	Input voltage range		2.5		6.0	V
I_Q	Operating quiescent current	One converter, I_{OUT} = 0mA. PFM mode enabled (Mode = 0) device not switching, EN1 = 1 OR EN2 = 1		19	29	µA
		Two converter, I_{OUT} = 0mA. PFM mode enabled (Mode = 0) device not switching, EN1 = 1 AND EN2 = 1		32	48	µA
		I_{OUT} = 0mA, MODE/DATA = GND, for one converter, V_{OUT} 1.575V(1)		23		µA
		I_{OUT} = 0mA, MODE/DATA = V_{IN}, for one converter, V_{OUT} 1.575V (1)		3.6		mA
I_{SD}	Shutdown current	EN1, EN2 = GND, V_{IN} = 3.6V(2)		1.2	3	µA
		EN1, EN2 = GND, V_{IN} ramped from 0V to 3.6V(3)		0.1	1	
V_{UVLO}	Undervoltage lockout threshold	Falling		1.5	2.35	V
		Rising			2.4	
ENABLE EN1, EN2						
V_{IH}	High-level input voltage, EN1, EN2		1.2		V_{IN}	V
V_{IL}	Low-level input voltage, EN1, EN2		0		0.4	V
I_{IN}	Input bias current, EN1, EN2	EN1, EN2 = GND or VIN		0.05	1.0	µA
DEF_1 INPUT						
I_{IN}	Input bias current DEF_1	DEF_1 = GND or VIN		0.01	1.0	µA
MODE/DATA						
V_{IH}	High-level input voltage, MODE/DATA		1.2		V_{IN}	V
V_{IL}	Low-level input voltage, MODE/DATA		0		0.4	V
I_{IN}	Input bias current, MODE/DATA	MODE/DATA = GND or VIN		0.01	1.0	µA
V_{OH}	Acknowledge output voltage high	Open drain, via external pullup resistor			V_{IN}	V
V_{OL}	Acknowledge output voltage low	Open drain, sink current 500µA	0		0.4	V
INTERFACE TIMING						
t_{Start}	Start time		2			µs
t_{H_LB}	High time low bit, logic 0 detection	Signal level on MODE/DATA pin is > 1.2V	2		200	µs
t_{L_LB}	Low time low bit, logic 0 detection	Signal level on MODE/DATA pin < 0.4V	2x t_{H_LB}		400	µs
t_{L_HB}	Low time high bit, logic 1 detection	Signal level on MODE/DATA pin < 0.4V	2		200	µs
t_{H_LB}	High time high bit, logic 1 detection	Signal level on MODE/DATA pin is > 1.2V	2x t_{L_HS}		400	µs
T_{EOS}	End of Stream	T_{EOS}	2			µs
t_{ACKN}	Duration of acknowledge condition (MODE/DATE line pulled low by the device)	V_{IN} 2.5V to 6V	400		520	µs
t_{valACK}	Acknowledge valid time				2	µs
$t_{timeout}$	Timeout for entering power save mode	MODE/DATA Pin changes from high to low			520	µs

(1) Device is switching with no load on the output, L = 3.3µH, value includes losses of the coil
(2) These values are valid after the device has been already enabled one time (EN1 or EN2 = high) and supply voltage V_{IN} has not powered down.
(3) These values are valid when the device is disabled (EN1 and EN2 low) and supply voltage V_{IN} is powered up. The values remain valid until the device has been enabled first time (EN1 or EN2 = high). After first enable, Note 3 becomes valid.

Copyright © 2010, Texas Instruments Incorporated

ELECTRICAL CHARACTERISTICS (continued)

V_{IN} = 3.6V, V_{OUT} = 1.8V, EN = V_{IN}, MODE = GND, L = 2.2µH, C_{OUT} = 20µF, T_J = –40°C to 125°C, typical values are at T_A = 25°C (unless otherwise noted)

PARAMETER			TEST CONDITIONS	MIN	TYP	MAX	UNIT
POWER SWITCH							
$R_{DS(ON)}$	P-Channel MOSFET On-resistance, Converter 1,2		V_{IN} = V_{GS} = 3.6V		280	620	mΩ
I_{LK_PMOS}	P-Channel leakage current		V_{DS} = 6.0V			1	µA
$R_{DS(ON)}$	N-Channel MOSFET On-resistance Converter 1,2		V_{IN} = V_{GS} = 3.6V		200	450	mΩ
$I_{LK_SW1/SW2}$	Leakage Current into SW1/SW2 Pin		Includes N-Chanel leakage current, V_{IN} = open, V_{SW} = 6.0V, EN = GND (4)		6	7.5	µA
I_{LIMF}	Forward Current Limit PMOS and NMOS	OUT 1/2 800mA	2.5V ≤ V_{IN} ≤ 6.0V	1.0	1.2	1.38	A
T_{SD}	Thermal shutdown		Increasing junction temperature		150		°C
	Thermal shutdown hysteresis		Decreasing junction temperature		20		°C
OSCILLATOR							
f_{SW}	Oscillator frequency		2.5V ≤ VIN ≤ 6.0V	2.0	2.25	2.5	MHz
OUTPUT							
V_{OUT}	Adjustable output voltage range			0.6		V_{IN}	V
V_{ref}	Reference voltage				600		mV
$V_{OUT\ (PFM)}$	DC output voltage accuracy PFM mode, adjustable and fixed output voltage (5)		Voltage positioning active, MODE/DATA = GND, device operating in PFM mode, VIN = 2.5V to 5.0V (6) (7)	–1.5%	1.01x V_{OUT}	2.5%	
V_{OUT}			MODE/DATA = GND; device operating in PWM Mode VIN = 2.5V to 6.0V (7)	–1%	0%	1%	
			V_{IN} = 2.5V to 6.0V, Mode/Data = V_{IN} , Fixed PWM operation, 0mA < I_{OUT} < I_{OUTMAX} (8)	–1%	0%	1%	
	DC output voltage load regulation		PWM operation mode			0.5	%/A
$t_{Start\ up}$	Start-up time		Activation time to start switching (9)		170		µs
t_{Ramp}	V_{OUT} Ramp UP time		Time to ramp from 5% to 95% of V_{OUT}		750		µs

(4) At pins SW1 and SW2 an internal resistor of 1MΩ is connected to GND
(5) Output voltage specification does not include tolerance of external voltage programming resistors
(6) Configuration L typ 2.2µH, C_{OUT} typ 20µF, see parameter measurement information, the output voltage ripple depends on the effective capacitance of the output capacitor, larger output capacitors lead to tighter output voltage tolerance
(7) In Power Save Mode, PWM operation is typically entered at I_{PSM} = V_{IN}/32Ω.
(8) For V_{OUT} > 2.2V, V_{IN} min = V_{OUT} +0.3V
(9) This time is valid if one converter turns from shutdown mode (EN2 = 0) to active mode (EN2 =1) AND the other converter is already enabled (e.g., EN1 = 1). In case both converters are turned from shutdown mode (EN1 and EN2 = low) to active mode (EN1 and/or EN2=1) a value of typ 80 µs for ramp up of internal circuits needs to be added. After t_{Start} the converter starts switching and ramps V_{OUT}.

Copyright © 2010, Texas Instruments Incorporated

DEVICE INFORMATION

PIN ASSIGNMENTS

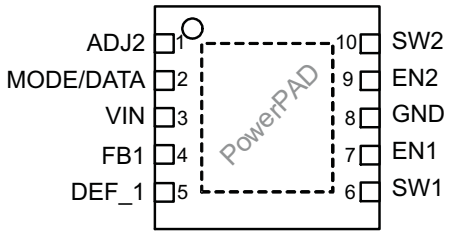

Top view DRC package

TERMINAL FUNCTIONS

TERMINAL		I/O	DESCRIPTION
NAME	NO. (QFN)		
ADJ2	1	I	Input to adjust output voltage of converter 2. In adjustable version (TPS62410) connect a external resistor divider between VOUT2, this pin and GND to set output voltage between 0.6V and VIN. If EasyScale™ Interface is used for converter 2, this pin must be directly connected to the output.
MODE/DATA	2	I	This Pin has 2 functions:
			1. Operation Mode selection: With low level, Power Save Mode is enabled where the device operates in PFM mode at light loads and enters automatically PWM mode at heavy loads. Pulling this PIN to high forces the device to operate in PWM mode over the whole load range.
			2. EasyScale™ Interface function: One wire serial interface to change the output voltage of both converters. The pin has an open drain output to provide an acknowledge condition if requested. The current into the open drain output stage may not exceed 500µA. The interface is active if either EN1 or EN2 is high.
VIN	3	I	Supply voltage, connect to VBAT, 2.5V to 6V
FB1	4	I	Direct feedback voltage sense input of converter 1, connect directly to Vout 1. An internal feed forward capacitor is connected between this pin and the error amplifier. In case of fixed output voltage versions or when the Interface is used, this pin is connected to an internal resistor divider network.
DEF_1	5	I/O	This pin defines the output voltage of converter 1. The pin acts in TPS62410 as an analog input for output voltage setting via external resistors. In fixed default output voltage versions this pin is a digital input to select between two fixed default output voltages. In TPS62410 an external resistor network needs to be connected to this pin to adjust the default output voltage.
SW1	6		Switch Pin of Converter1. Connected to Inductor 1
EN1	7	I	Enable Input for Converter1, active high
GND	8	I	GND for both converters, this pin should be connected with the PowerPAD
EN2	9	I/O	Enable Input for Converter 2, active high
SW2	10		Switch Pin of Converter 2. Connected to Inductor 2
PowerPAD™			Connect to GND

FUNCTIONAL BLOCK DIAGRAM

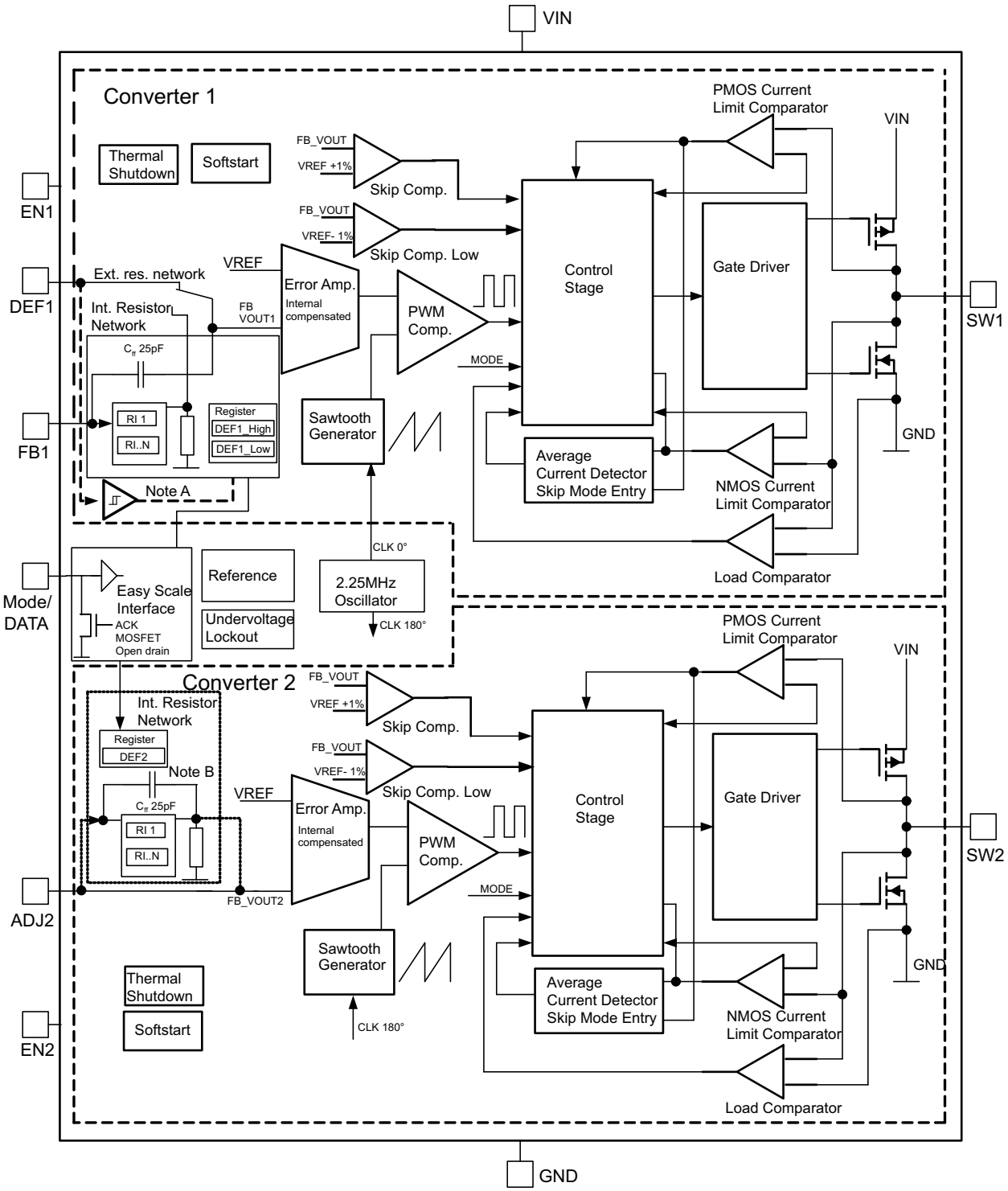

A. In fixed output voltage version, the PIN DEF_1 is connected to an internal digital input and disconnected from the error amplifier

B. To set the output voltage of Converter 2 via EasyScale Interface, ADJ2 pin must be directly connected to VOUT2

Copyright © 2010, Texas Instruments Incorporated

PARAMETER MEASUREMENT INFORMATION

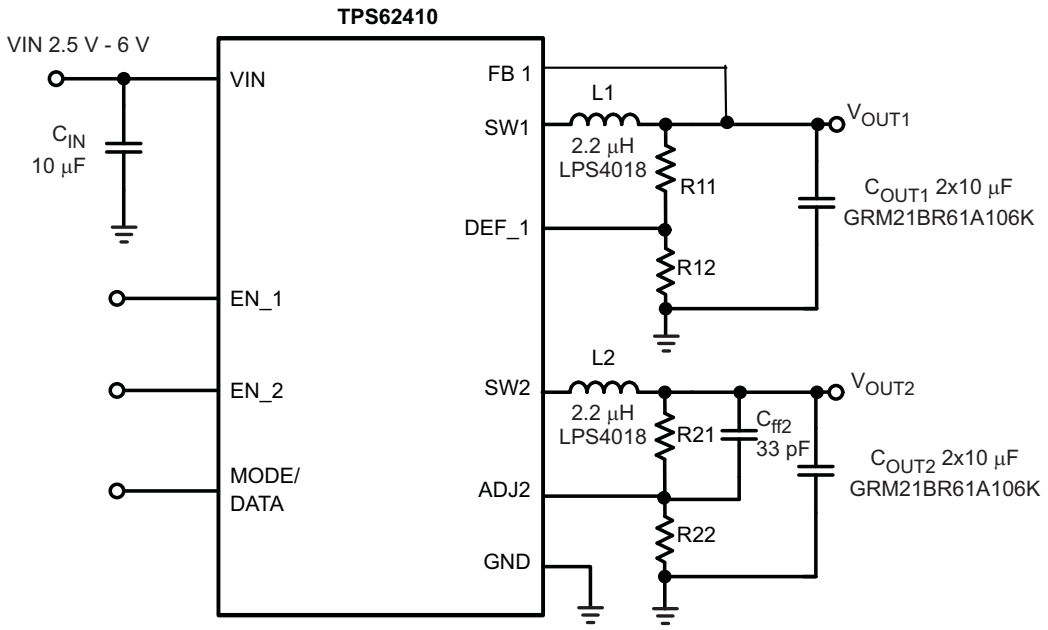

TYPICAL CHARACTERISTICS

TABLE OF GRAPHS

		FIGURE NO.
Efficiency V_{OUT1} = 1.2V		1
Efficiency V_{OUT1} = 1.5V		2
Efficiency V_{OUT2} = 1.8V		3
Efficiency V_{OUT2} = 3.3V		4
Efficiency	vs V_{IN}	5, 6
DC Output Accuracy V_{OUT1} = 1.5V		7
DC Output Accuracy V_{OUT2} = 3.3V		8
F_{OSC}	vs V_{IN}	9
I_q for one converter		10
I_q for both converters, not switching		11
R_{DSON} PMOS	vs V_{IN}	12
R_{DSON} NMOS	vs V_{IN}	13
Light Load Output Voltage Ripple in Power Save Mode		14
Output Voltage Ripple in Forced PWM Mode		15
Output Voltage Ripple in PWM Mode		16
Forced PWM/ PFM Mode Transition		17
Load Transient Response PFM/PWM		18
Load Transient Response PWM Operation		19
Line Transient Response		20
Startup Timing One Converter		21
Typical Operation V_{IN} = 3.6V, V_{OUT1} = 1.575V, VOUT2 = 1.8V		22
Typical Operation V_{IN} = 3.6V, V_{OUT1} = 1.8V, V_{OUT2} = 3.0V		23
Typical Operation V_{IN} = 3.6V, V_{OUT1} = 1.2V, V_{OUT2} = 1.2V		24
Dynamic Voltage Positioning		25
Soft Start		26

Copyright © 2010, Texas Instruments Incorporated

TYPICAL CHARACTERISTICS (continued)

	FIGURE NO.
EasyScale Protocol Overview	27
EasyScale Protocol Without Acknowledge	28
EasyScale Protocol Including Acknowledge	29
EasyScale – Bit Coding	30
MODE/DATA PIN: Mode Selection	31
MODE/DATA Pin: Power Save Mode / Interface Communication	32
Typical Application Circuit 1.5V / 2.85V Adjustable Outputs	33,34
Layout Diagram	35
PCB Layout	36

EFFICIENCY V_{OUT} = 1.2V

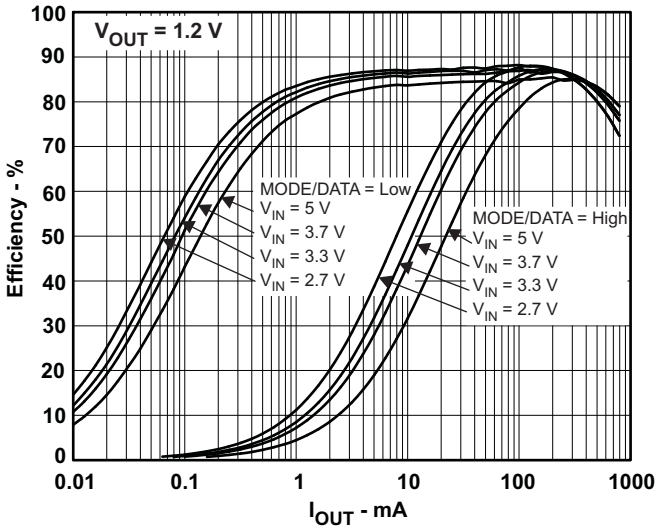

Figure 1.

EFFICIENCY V_{OUT} = 1.5V

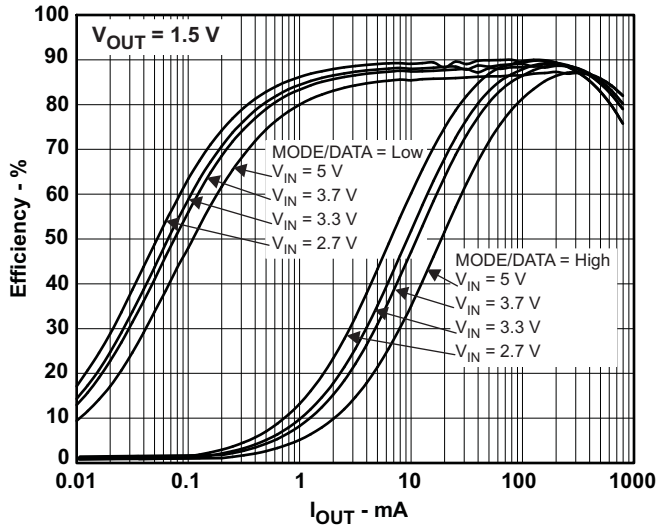

Figure 2.

EFFICIENCY V_{OUT2} = 1.8V

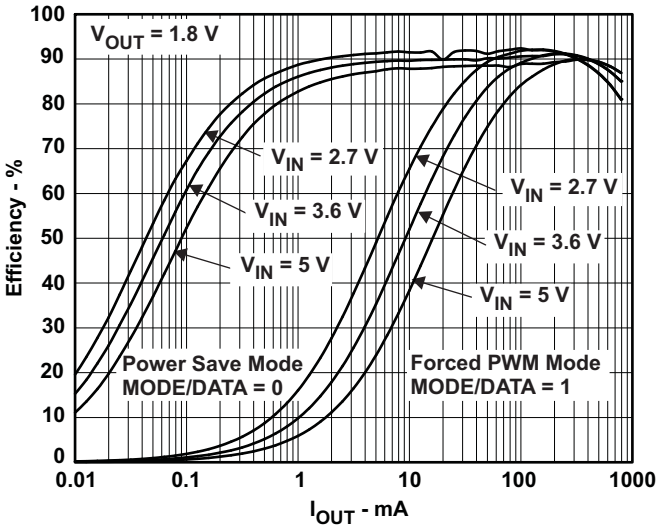

Figure 3.

EFFICIENCY V_{OUT2} = 3.3V

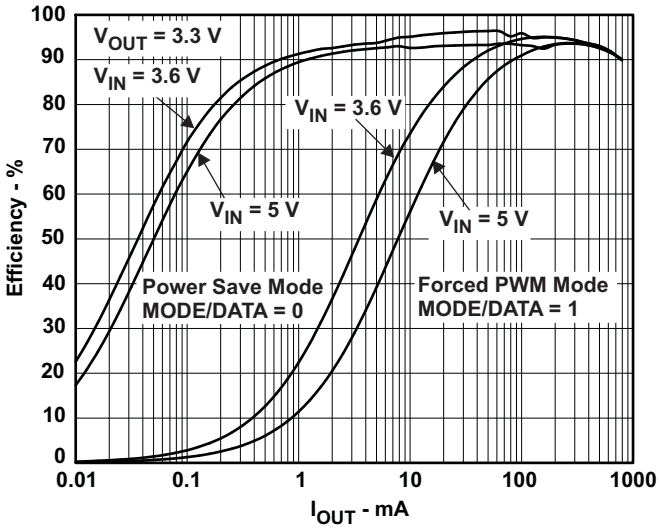

Figure 4.

Copyright © 2010, Texas Instruments Incorporated

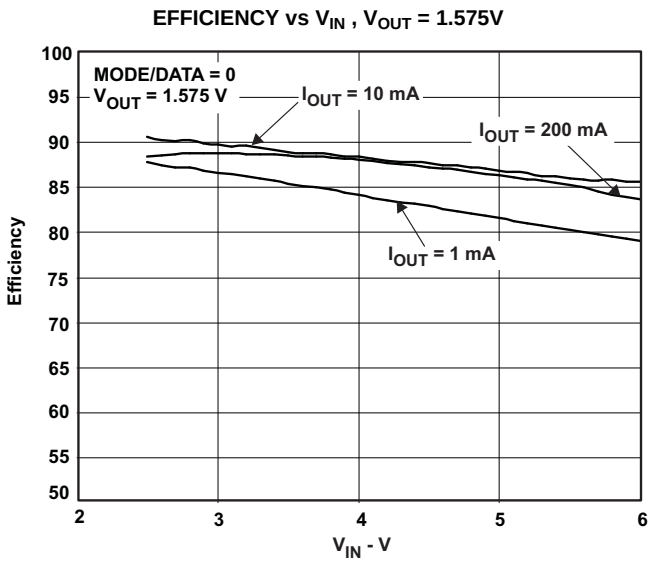

Figure 5.

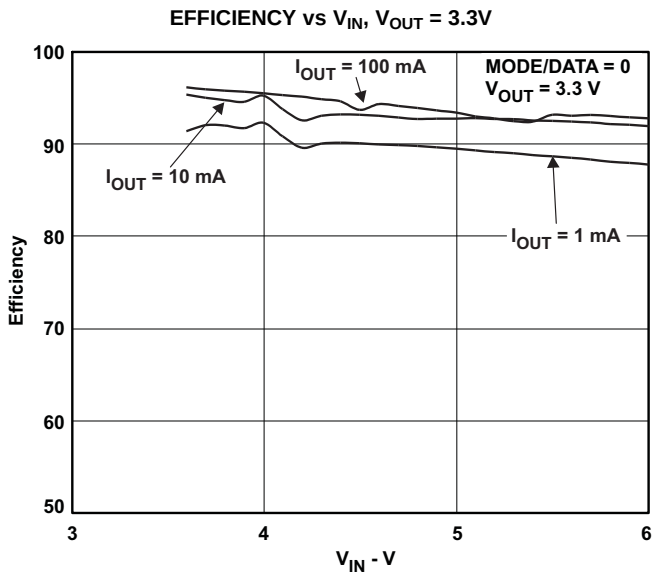

Figure 6.

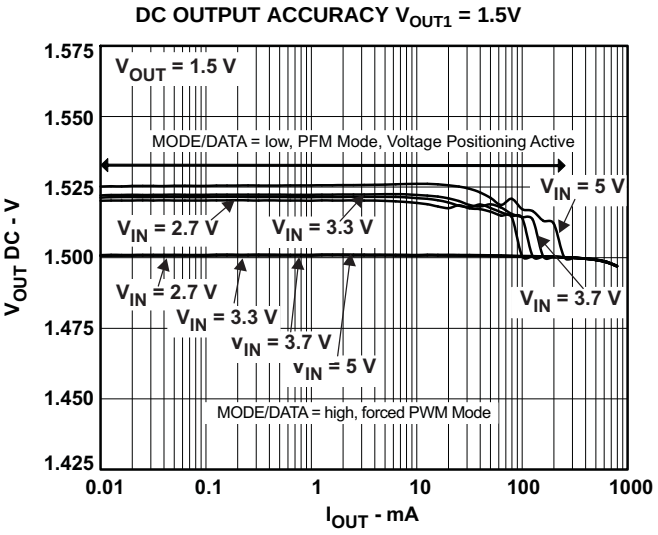

Figure 7.

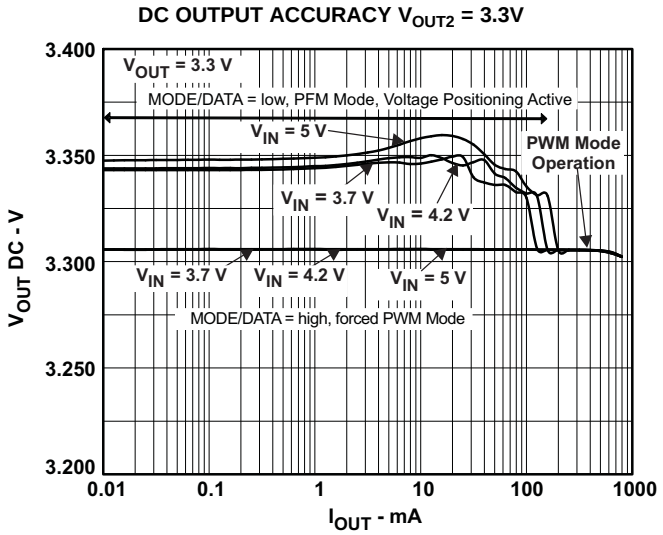

Figure 8.

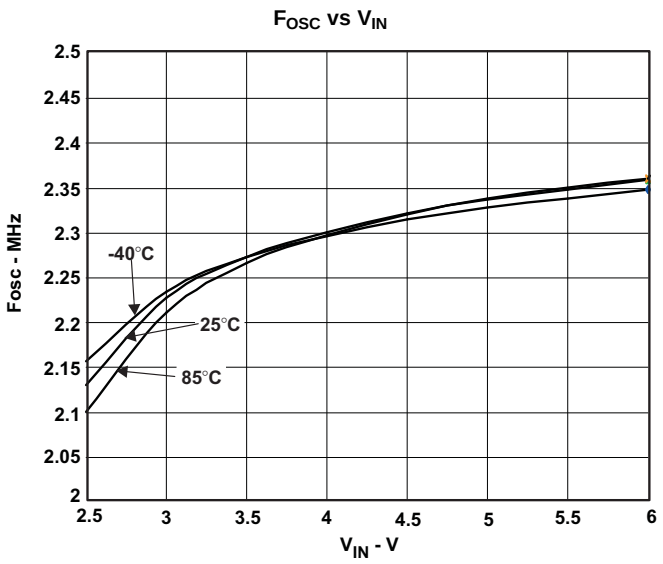

Figure 9.

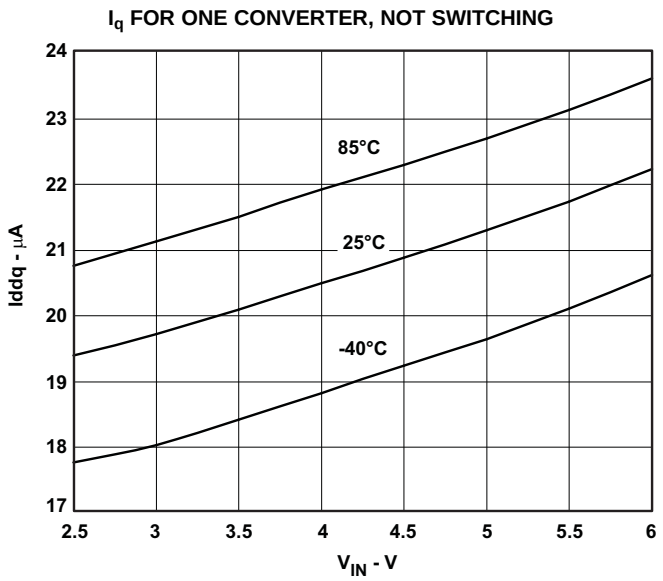

Figure 10.

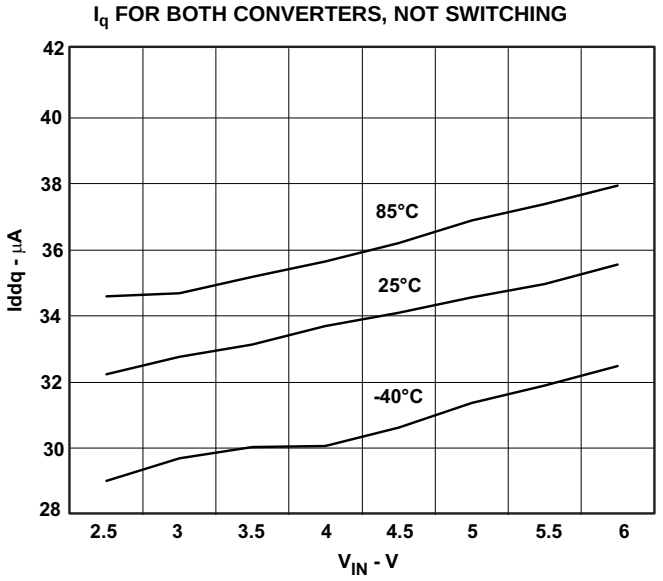

Figure 11.

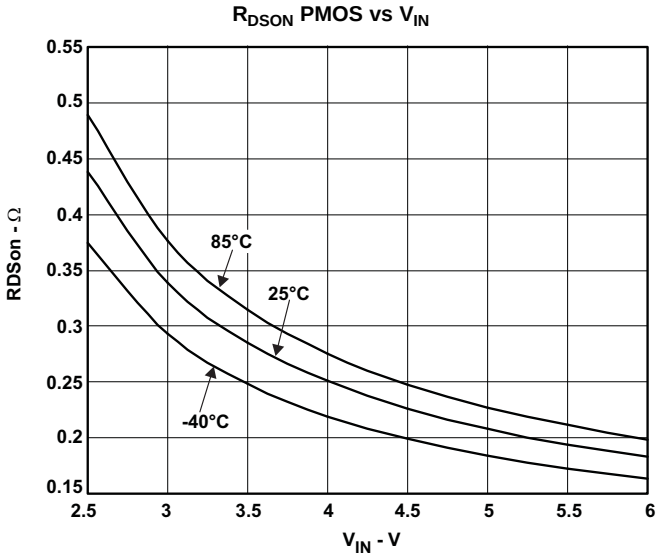

Figure 12.

Copyright © 2010, Texas Instruments Incorporated

R_{DSON} NMOS vs V_{IN}

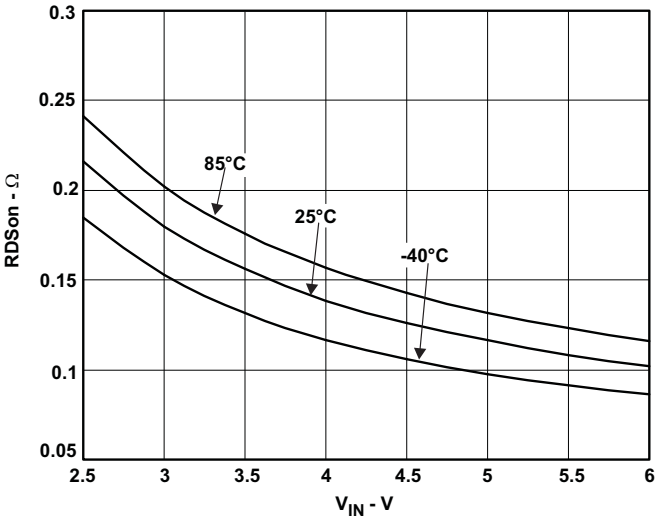

Figure 13.

LIGHT LOAD OUTPUT VOLTAGE RIPPLE IN POWER SAVE MODE

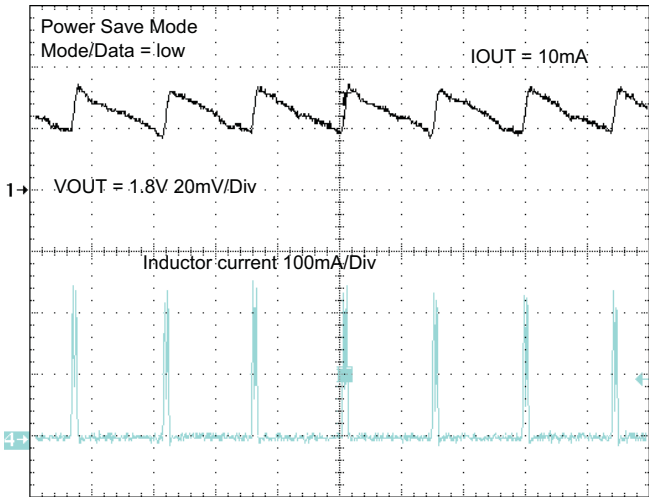

Time base - 10 μs/Div

Figure 14.

OUTPUT VOLTAGE RIPPLE IN FORCED PWM MODE

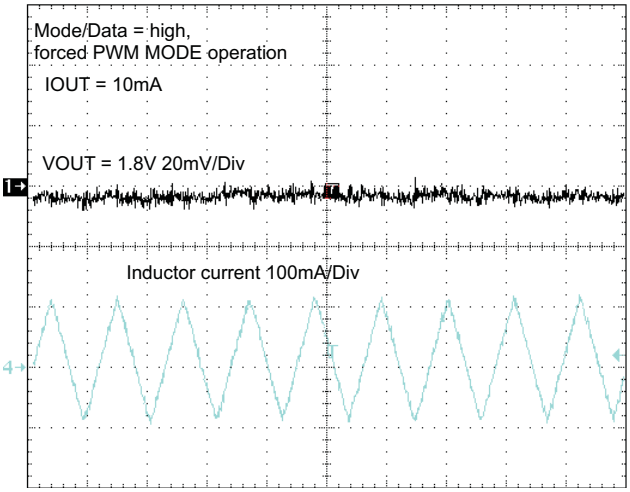

Time base - 400 ns/Div

Figure 15.

OUTPUT VOLTAGE RIPPLE IN PWM MODE

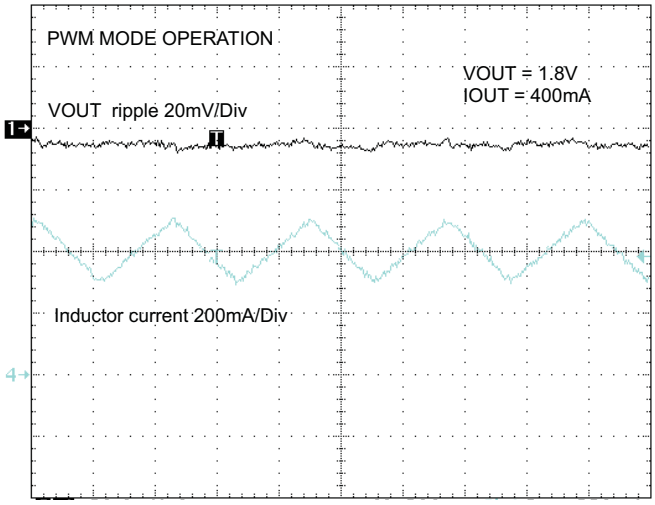

Time base - 200 ns/Div

Figure 16.

FORCED PWM/PFM MODE TRANSITION

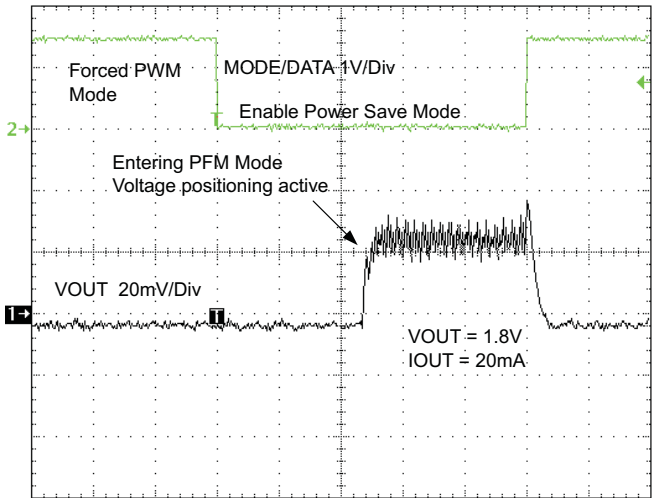

Time base - 20 µs/Div

Figure 17.

LOAD TRANSIENT RESPONSE PFM/PWM

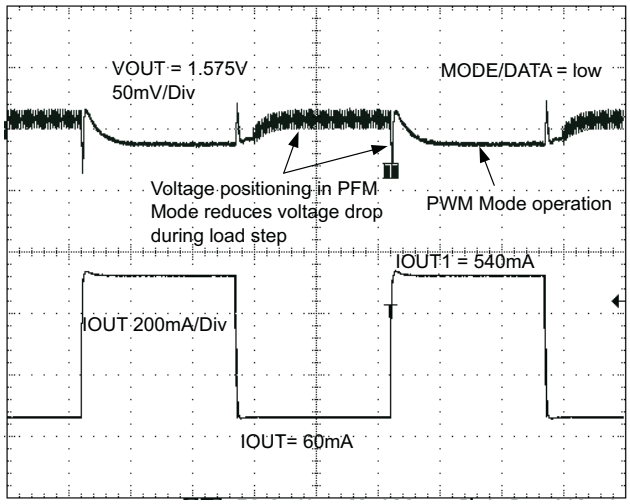

Time base - 100 µs/Div

Figure 18.

LOAD TRANSIENT RESPONSE PWM OPERATION

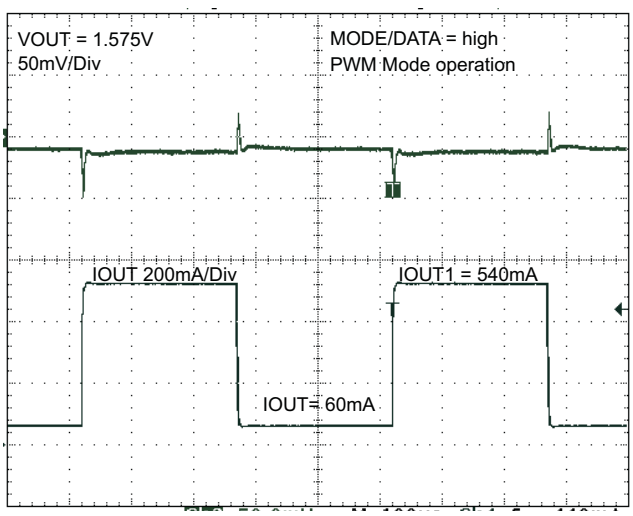

Time base - 100 µs/Div

Figure 19.

LINE TRANSIENT RESPONSE

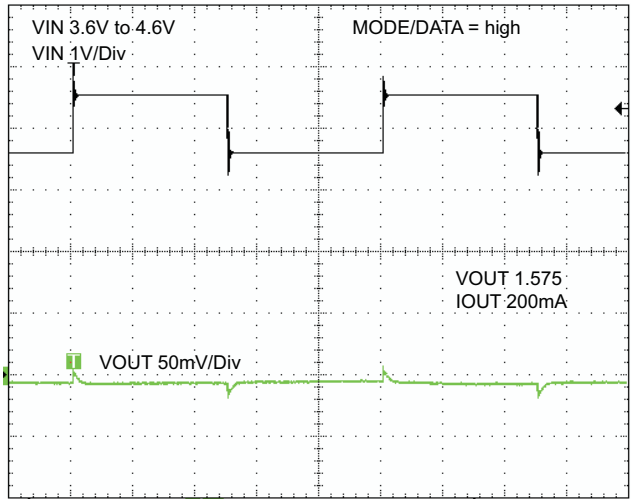

Time base - 400 µs/Div

Figure 20.

Copyright © 2010, Texas Instruments Incorporated

STARTUP TIMING ONE CONVERTER

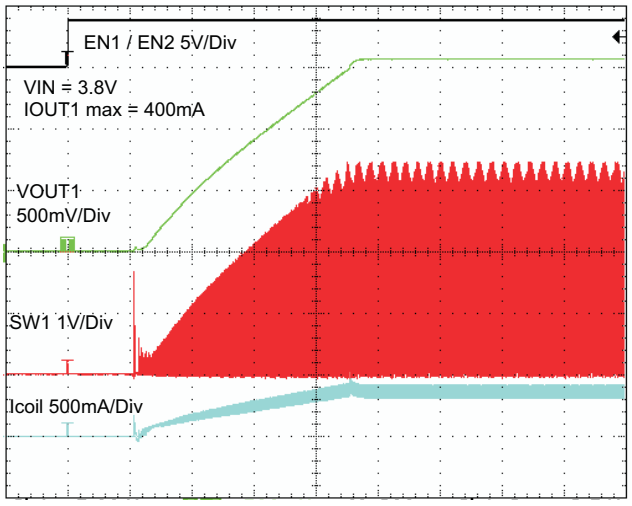

Time base - 200 µs/Div

Figure 21.

TYPICAL OPERATION V_{IN} = 3.6V, V_{OUT1} = 1.575V, V_{OUT2} = 1.8V

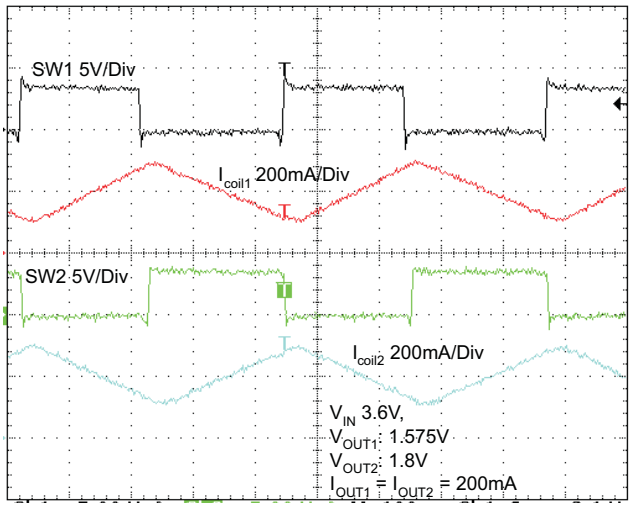

Time base - 100 ns/Div

Figure 22.

TYPICAL OPERATION V_{IN} = 3.6V, V_{OUT1} = 1.8V, V_{OUT2} = 3.0V

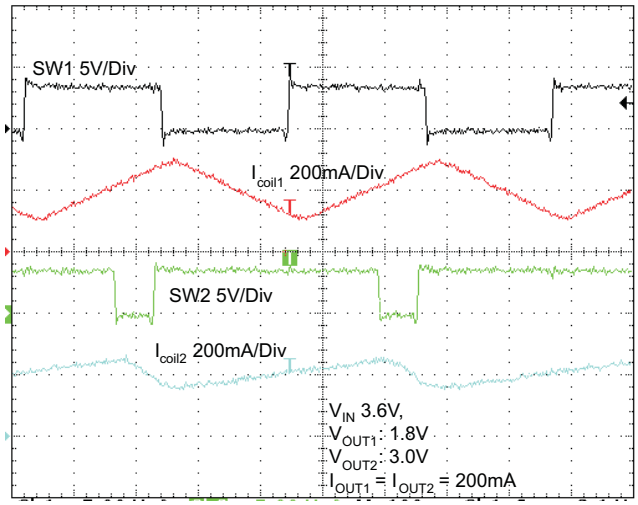

Time base - 100 ns/Div

Figure 23.

TYPICAL OPERATION V_{IN} = 3.6V, V_{OUT1} = 1.2V, V_{OUT2} = 1.2V

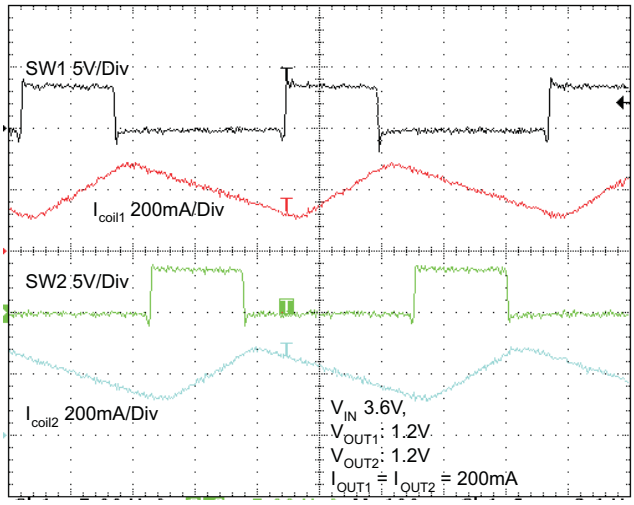

Time base - 100 ns/Div

Figure 24.

V_{OUT1} CHANGE WITH EASYSCALE

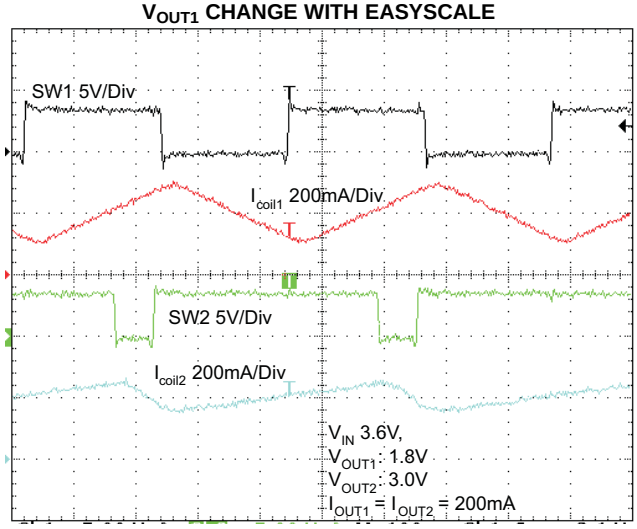

Time base - 100 ns/Div

DETAILED DESCRIPTION

OPERATION

The TPS62410 includes two synchronous step-down converters. The converters operate with typically 2.25MHz fixed frequency pulse width modulation (PWM) at moderate to heavy load currents. If Power Save Mode is enabled, the converters automatically enter Power Save Mode at light load currents and operate in PFM (Pulse Frequency Modulation). During PWM operation the converters use a unique fast response voltage mode controller scheme with input voltage feed-forward to achieve good line and load regulation allowing the use of small ceramic input and output capacitors. At the beginning of each clock cycle initiated by the clock signal, the P-channel MOSFET switch is turned on and the inductor current ramps up until the comparator trips and the control logic turns off the switch.

Each converter integrates two current limits, one in the P-channel MOSFET and another one in the N-channel MOSFET. When the current in the P-channel MOSFET reaches its current limit, the P-channel MOSFET is turned off and the N-channel MOSFET is turned on. If the current in the N-channel MOSFET is above the N-MOS current limit threshold, the N-channel MOSFET remains on until the current drops below its current limit. The two DC-DC converters operate synchronized to each other. A 180° phase shift between converter 1 and converter 2 decreases the input RMS current.

Converter 1

In the adjustable output voltage version TPS62410 the converter 1 output voltage can be set via an external resistor network on PIN DEF_1, which operates as an analog input. In this case, the output voltage can be set in the range of 0.6V to VIN V. The FB1 Pin must be directly connected to the converter 1 output voltage VOUT1. It feeds back the output voltage directly to the regulation loop.

The output voltage of converter 1 can also be changed by the EasyScale serial Interface. This makes the device very flexible for output voltage adjustment. In this case, the device uses an internal resistor network.

Converter 2

In the adjustable output voltage version TPS62410, the converter 2 output voltage is set by an external resistor divider connected to ADJ2 Pin and uses an external feed forward capacitor of 33pF.

It is also possible to change the output voltage of converter 2 via the EasyScale Interface. In this case, the ADJ2 Pin must be directly connected to converter 2 output voltage VOUT2. At TPS62410 no external resistor network may be connected.

 Copyright © 2010, Texas Instruments Incorporated

POWER SAVE MODE

The Power Save Mode is enabled with Mode/Data Pin set to 0 for both converters. If the load current of a converter decreases, this converter will enter Power Save Mode operation automatically. The transition to Power Save Mode of a converter is independent from the operating condition of the other converter. During Power Save Mode the converter operates with reduced switching frequency in PFM mode and with a minimum quiescent current to maintain high efficiency. The converter will position the output voltage in PFM mode to typically 1.01xVOUT. This voltage positioning feature minimizes voltage drops caused by a sudden load step.

In order to optimize the converter efficiency at light load the average inductor current is monitored. The device changes from PWM Mode to Power Save Mode, if in PWM mode the inductor current falls below a certain threshold. The typical output current threshold depends on VIN and can be calculated according to Equation 1 for each converter.

Equation 1: Average output current threshold to enter PFM Mode

$$I_{OUT_PFM_enter} = \frac{VIN_{DCDC}}{32\ \Omega} \tag{1}$$

Equation 2: Average output current threshold to leave PFM Mode

$$I_{OUT_PFM_leave} = \frac{VIN_{DCDC}}{24\ \Omega} \tag{2}$$

In order to keep the output voltage ripple in Power Save Mode low, the output voltage is monitored with a single threshold comparator (skip comparator). As the output voltage falls below the skip comparator threshold (skip comp) of 1.01 x V_{OUT} nominal, the corresponding converter starts switching for a minimum time period of typically 1µs and provides current to the load and the output capacitor. Therefore the output voltage increases and the device maintains switching until the output voltage trips the skip comparator threshold (skip comp) again. At this moment all switching activity is stopped and the quiescent current is reduced to minimum. The load is supplied by the output capacitor until the output voltage has dropped below the threshold again. Hereupon the device starts switching again. The Power Save Mode is exited and PWM Mode entered in case the output current exceeds the current IOUT_PFM_leave, or if the output voltage falls below a second comparator threshold, called skip comparator low (Skip Comp Low) threshold. This skip comparator low threshold is set to –2% below nominal Vout, and enables a fast transition from Power Save Mode to PWM Mode during a load step. In Power Save Mode the quiescent current is reduced typically to 19µA for one converter and 32µA for both converters active. This single skip comparator threshold method in Power Save Mode results in a very low output voltage ripple. The ripple depends on the comparator delay and the size of the output capacitor. Increasing output capacitor values minimizes the output ripple. The Power Save Mode can be disabled through the MODE/DATA pin set to high. Both converters then operate in fixed PWM mode. Power Save Mode Enable/Disable applies to both converters.

Dynamic Voltage Positioning

This feature reduces the voltage under/overshoots at load steps from light to heavy load and vice versa. It is activated in Power Save Mode operation. It provides more headroom for both the voltage drop at a load step, and the voltage increase at a load throw-off. This improves load transient behavior.

At light loads, in which the converter operate in PFM Mode, the output voltage is regulated typically 1% higher than the nominal value. In case of a load transient from light load to heavy load, the output voltage drops until it reaches the skip comparator low threshold set to –2% below the nominal value and enters PWM mode. During a load throw off from heavy load to light load, the voltage overshoot is also minimized due to active regulation turning on the N-channel switch.

Copyright © 2010, Texas Instruments Incorporated

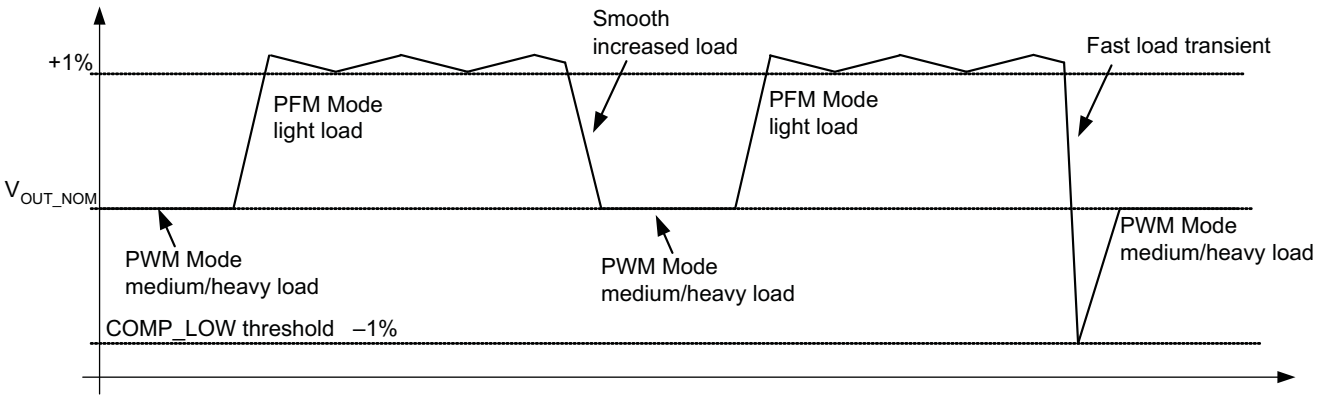

Figure 25. Dynamic Voltage Positioning

Soft Start

The two converters have an internal soft start circuit that limits the inrush current during start-up. During soft start, the output voltage ramp up is controlled as shown in Figure 26.

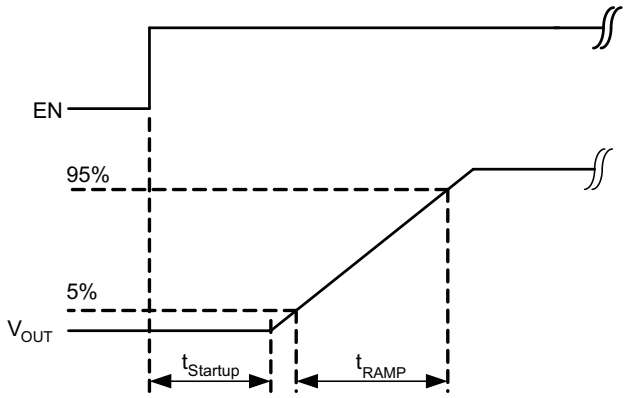

Figure 26. Soft Start

100% Duty Cycle Low Dropout Operation

The converters offer a low input to output voltage difference while still maintaining operation with the use of the 100% duty cycle mode. In this mode the P-channel switch is constantly turned on. This is particularly useful in battery-powered applications to achieve longest operation time by taking full advantage of the whole battery voltage range; i.e., the minimum input voltage to maintain regulation depends on the load current and output voltage, and can be calculated as:

$$Vin_{min} = Vout_{max} + Iout_{max} \times \left(RDSon_{max} + R_L\right) \quad (3)$$

With:

$Iout_{max}$ = maximum output current plus inductor ripple current
$RDSon_{max}$ = maximum P-channel switch RDSon
R_L = DC resistance of the inductor
$Vout_{max}$ = nominal output voltage plus maximum output voltage tolerance

With decreasing load current, the device automatically switches into pulse skipping operation in which the power stage operates intermittently based on load demand. By running cycles periodically the switching losses are minimized and the device runs with a minimum quiescent current maintaining high efficiency.

Copyright © 2010, Texas Instruments Incorporated

Under-Voltage Lockout

The under voltage lockout circuit prevents the device from malfunctioning at low input voltages and from excessive discharge of the battery and disables the converters. The under-voltage lockout threshold is typically 1.5V, max 2.35V. In case the default register values are overwritten by the Interface, the new values in the registers REG_DEF_1_Low and REG_DEF_2 remain valid as long the supply voltage does not fall under the under-voltage lockout threshold, independent of whether the converters are disabled.

MODE SELECTION

The MODE/DATA pin allows mode selection between forced PWM Mode and Power Save Mode for both converters. Furthermore, this pin is a multipurpose pin and provides (besides Mode selection) a one-pin interface to receive serial data from a host to set the output voltage. This is described in the section EasyScale Interface.

Connecting this pin to GND enables the automatic PWM and power save mode operation. The converters operate in fixed-frequency PWM mode at moderate to heavy loads and in the PFM mode during light loads, maintaining high efficiency over a wide load current range.

Pulling the MODE/DATA pin high forces both converters to operate constantly in the PWM mode even at light load currents. The advantage is the converters operate with a fixed frequency that allows simple filtering of the switching frequency for noise sensitive applications. In this mode, the efficiency is lower compared to the power save mode during light loads. For additional flexibility it is possible to switch from Power Save Mode to forced PWM mode during operation. This allows efficient power management by adjusting the operation of the converter to the specific system requirements.

In case the operation mode will be changed from forced PWM mode (MODE/DATA = high) to Power Save Mode Enable (MODE/DATA = 0) the Power Save Mode will be enabled after a delay time of typically $t_{timeout}$, which is a maximum of 520µs.

The forced PWM Mode operation is enabled immediately with Pin MODE/DATA set to 1.

ENABLE

The device has for each converter a separate EN pin to start up each converter independently. If EN1, EN2 are set to high, the corresponding converter starts up with soft start as previously described.

Pulling EN1 and EN2 pin low forces the device into shutdown, with a shutdown quiescent current of typically 1.2µA. In this mode, the P and N-Channel MOSFETs are turned-off and the entire internal control circuitry is switched-off. For proper operation the EN1 and EN2 pins must be terminated and must not be left floating.

DEF_1 PIN FUNCTION

The DEF_1 pin is dedicated to converter 1 and works as an analog input for adjustable output voltage setting. Connecting an external resistor network to this pin adjusts the default output voltage to any value starting from 0.6V to V_{IN}.

180° OUT OF PHASE OPERATION

In PWM Mode the converters operate with a 180° turn-on phase shift of the PMOS (high side) transistors. It prevents the high side switches of both converters to be turned on simultaneously, and therefore smooths the input current. This feature reduces the surge current drawn from the supply.

SHORT-CIRCUIT PROTECTION

Both outputs are short-circuit protected with maximum output current = I_{LIMF}(P-MOS and N-MOS). Once the PMOS switch reaches its current limit, it will be turned off and the NMOS turned on. The PMOS only turns on again, once the current in the NMOS decreases below the NMOS current limit.

THERMAL SHUTDOWN

As soon as the junction temperature, T_J, exceeds typically 150°C the device goes into thermal shutdown. In this mode, the P and N-Channel MOSFETs are turned-off. The device continues its operation when the junction temperature falls below the thermal shutdown hysteresis again.

Copyright © 2010, Texas Instruments Incorporated

EasyScale™: One Pin Serial Interface for Dynamic Output Voltage Adjustment

General

EasyScale is a simple but very flexible one pin interface to configure the output voltage of both DC/DC converters. The interface is based on a master – slave structure, where the master is typically a µController or Application processor. Figure 27 and Table 2 give an overview of the protocol. The protocol consists of a device specific address byte and a data byte. The device specific address byte is fixed to 4E hex. The data byte consists of five bit for information, two address bits and the RFA bit. RFA bit set to high indicates the **R**equest **F**or **A**cknowledge condition. The Acknowledge condition is only applied if the protocol was received correctly.

The advantage of EasyScale compared to other one-pin interfaces is that its bit detection is, to a large extent, independent from the bit transmission rate. It can automatically detect bit rates between 1.7kBit/sec and up to 160kBit/sec. Furthermore, the interface is shared with the Mode/Data Pin and requires therefore no additional pin.

Protocol

All bits are transmitted MSB first and LSB last. Figure 28 shows the protocol without acknowledge request (bit RFA = 0), Figure 29 with acknowledge (bit RFA = 1) request.

Prior to both bytes, device address byte and data byte, a start condition needs to be applied. For this, the Mode/Data pin needs to be pulled high for at least t_{Start} before the bit transmission starts with the falling edge. In case the Mode/Data line was already at high level (forced PWM Mode selection) no start condition need be applied prior the device address byte.

The transmission of each byte needs to be closed with an End Of Stream condition for at least T_{EOS}.

Addressable Registers

In TPS62410 two registers with a data content of 5 bits can be addressed to change the output voltage of both converters. With 5 bit data content, 32 different values for each register are available. Table 1 shows the addressable registers if DEF_1 pin acts as analog input with external resistors connected.

The available output voltages for converter 1 are shown in Table 3, for converter 2 in Table 4. To generate these output voltages, a precise internal resistor divider network is used, which makes external resistors unnecessary and results therefore in an higher output voltage accuracy and less board space.

The Interface is activated if at least one of the converters is enabled (EN1 or EN2 is high). After the Startup-time t_{Start} (170µs) the interface is ready for data reception.

Table 1. Addressable Registers for Adjustable Output Voltage Devices

REGISTER	DESCRIPTION	A1	A0	D4	D3	D2	D1	D0
REG_DEF_1_High	Not available in TPS62410 adjustable version	0	1					
REG_DEF_1_Low	Converter 1 output voltage setting	0	0	TPS62410 see Table 3				
REG_DEF_2	Converter 2 output voltage	1	0	TPS62410 see Table 4, connect ADJ2 pin directly to $VOUT_2$				
	Don't use	1	1					

Bit Decoding

The bit detection is based on a PWM scheme, where the criterion is the relation between t_{LOW} and t_{HIGH}. It can be simplified to:

High Bit: $t_{High} > t_{Low}$, but with t_{High} at least 2x t_{Low}, see Figure 30

Low Bit: $t_{Low} > t_{High}$, but with t_{Low} at least 2x t_{High}, see Figure 30

The bit detection starts with a falling edge on the MODE/DATA pin and ends with the next falling edge. Depending on the relation between t_{Low} and t_{High} a 0 or 1 is detected.

Acknowledge

The Acknowledge condition is only applied if:

 Copyright © 2010, Texas Instruments Incorporated

- Acknowledge is requested by a set RFA bit
- The transmitted device address matches with the device address of the device
- 16 bits were received correctly

In this case, the device turns on the internal ACKN-MOSFET and pulls the MODE/DATA pin low for the time t_{ACKN}, which is max. 520µs. The Acknowledge condition is valid after an internal delay time t_{valACK}. This means the internal ACKN-MOSFET is turned on after t_{valACK}, when the last falling edge of the protocol was detected. The master controller keeps the line low during this time.

The master device can detect the acknowledge condition with it's input by releasing the MODE/DATA pin after t_{valACK} and read back a 0.

In case of an invalid device address or not correctly received protocol, no acknowledge condition will be applied, thus the internal MOSFET will not be turned on and the external pullup resistor pulls MODE/DATA pin high after t_{valACK}. The MODE/DATA pin can be used again after the acknowledge condition ends.

NOTE

The acknowledge condition may only be requested in case the master device has an open drain output.

In case of a push pull output stage it is recommended to use a series resistor in the MODE/DATA line to limit the current to 500µA in case of an accidentally requested acknowledge to protect the internal ACKN-MOSFET.

MODE Selection

Because of the MODE/DATA pin is used for two functions, interface and a MODE selection, the device needs to determine when it has to decode the bit stream or to change the operation mode.

The device enters forced PWM mode operation immediately whenever the MODE/DATA pin turns to high level. The device stays also in forced PWM mode during the whole time of a protocol reception.

With a falling edge on the MODE/DATA pin the device starts bit decoding. If the MODE/DATA pin stays low for at least $t_{timeout}$, the device get's an internal timeout and Power Save Mode operation is enabled.

A protocol which is sent within this time will be ignored, because the falling edge for the Mode change will be first interpreted as start of the first bit. In this case it is recommended to send first the protocol and change at the end of the protocol to Power Save Mode.

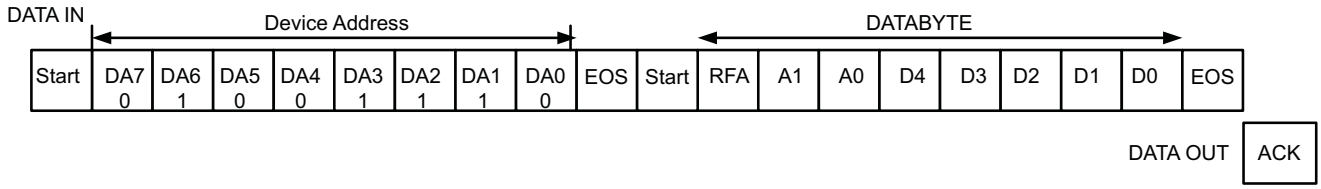

Figure 27. Easy Scale Protocol Overview

Table 2. Easy Scale Bit Description

BYTE	BIT NUMBER	NAME	TRANSMISSION DIRECTION	DESCRIPTION
Device Address Byte	7	DA7	IN	0 MSB device address
	6	DA6	IN	1
	5	DA5	IN	0
	4	DA4	IN	0
4Ehex	3	DA3	IN	1
	2	DA2	IN	1
	1	DA1	IN	1
	0	DA0	IN	0 LSB device address

Table 2. Easy Scale Bit Description (continued)

BYTE	BIT NUMBER	NAME	TRANSMISSION DIRECTION	DESCRIPTION
Data byte	7(MSB)	RFA	IN	Request For Acknowledge, if high, Acknowledge condition will applied by the device
	6	A1		Address Bit 1
	5	A0		Address Bit 0
	4	D4		Data Bit 4
	3	D3		Data Bit 3
	2	D2		Data Bit 2
	1	D1		Data Bit 1
	0(LSB)	D0		Data Bit 0
		ACK	OUT	Acknowledge condition active 0, this condition will only be applied in case RFA bit is set. Open drain output, Line needs to be pulled high by the host with a pullup resistor. This feature can only be used if the master has an open drain output stage. In case of a push pull output stage Acknowledge condition may not be requested!

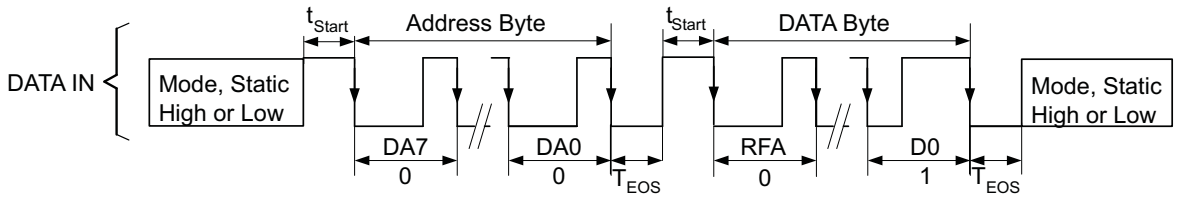

Figure 28. Easy Scale Protocol Without Acknowledge

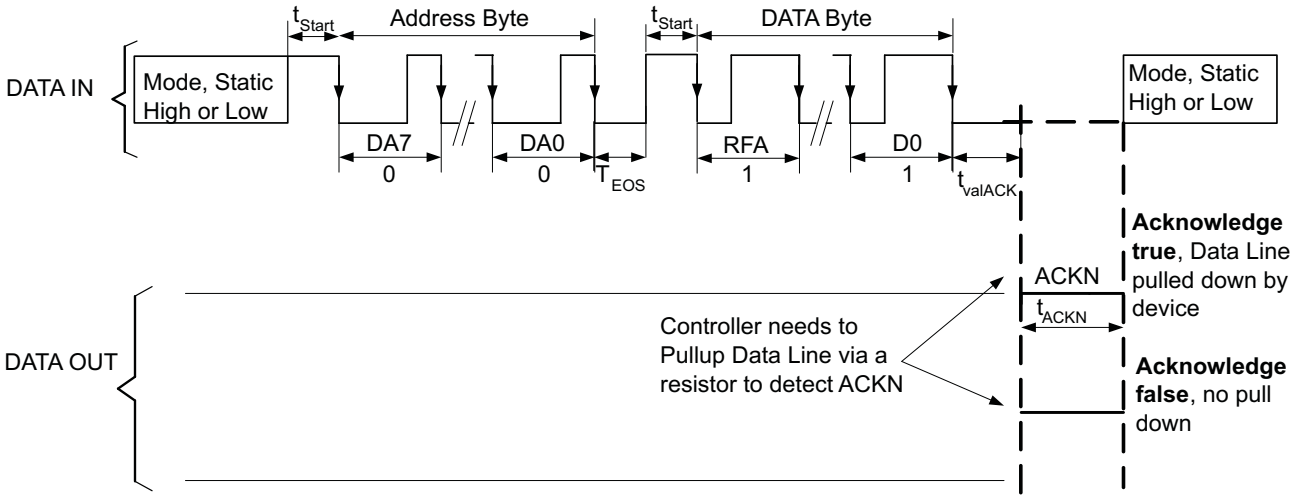

Figure 29. Easy Scale Protocol Including Acknowledge

Copyright © 2010, Texas Instruments Incorporated

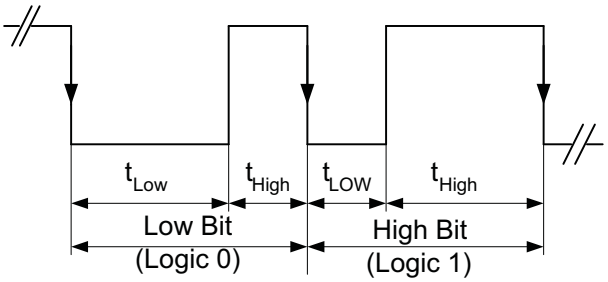

Figure 30. EasyScale – Bit Coding

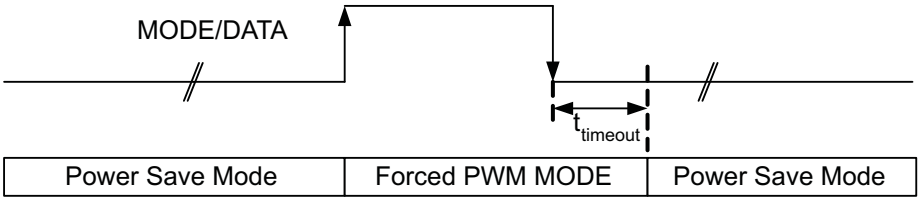

Figure 31. MODE/DATA PIN: Mode Selection

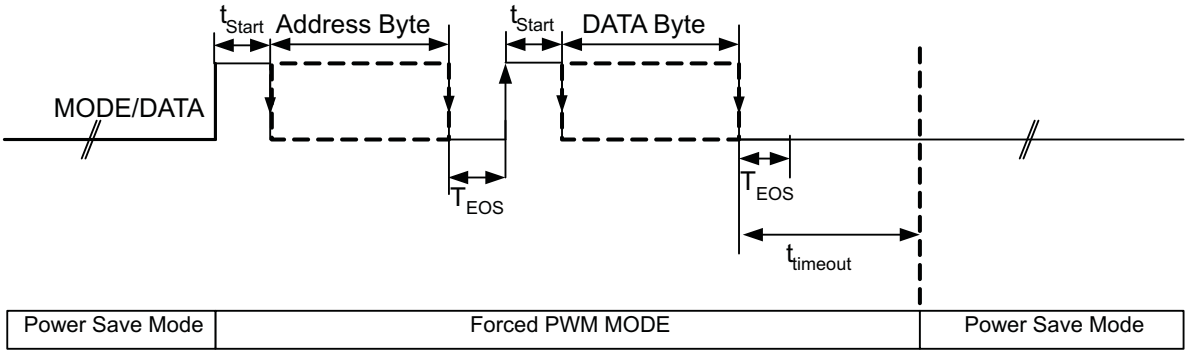

Figure 32. MODE/DATA Pin: Power Save Mode/Interface Communication

Table 3. Selectable Output Voltages for Converter 1, With DEF1 Pin as Analog Input (TPS62410)

	TPS62410 OUTPUT VOLTAGE [V] REGISTER REG_DEF_1_LOW	D4	D3	D2	D1	D0
0	**V_{OUT1} Adjustable Output With Resistor Network on DEF_1 Pin**	**0**	**0**	**0**	**0**	**0**
	0.6V with DEF_1 Pin connected to V_{OUT1}					
1	0.825	0	0	0	0	1
2	0.85	0	0	0	1	0
3	0.875	0	0	0	1	1
4	0.9	0	0	1	0	0
5	0.925	0	0	1	0	1
6	0.95	0	0	1	1	0
7	0.975	0	0	1	1	1
8	1.0	0	1	0	0	0
9	1.025	0	1	0	0	1
10	1.050	0	1	0	1	0
11	1.075	0	1	0	1	1
12	1.1	0	1	1	0	0
13	1.125	0	1	1	0	1
14	1.150	0	1	1	1	0
15	1.175	0	1	1	1	1
16	1.2	1	0	0	0	0
17	1.225	1	0	0	0	1
18	1.25	1	0	0	1	0
19	1.275	1	0	0	1	1
20	1.3	1	0	1	0	0
21	1.325	1	0	1	0	1
22	1.350	1	0	1	1	0
23	1.375	1	0	1	1	1
24	1.4	1	1	0	0	0
25	1.425	1	1	0	0	1
26	1.450	1	1	0	1	0
27	1.475	1	1	0	1	1
28	1.5	1	1	1	0	0
29	1.525	1	1	1	0	1
30	1.55	1	1	1	1	0
31	1.575	1	1	1	1	1

Copyright © 2010, Texas Instruments Incorporated

Table 4. Selectable Output Voltages for Converter 2, (ADJ2 Connected to V_{OUT})

	OUTPUT VOLTAGE [V] FOR REGISTER REG_DEF_2	D4	D3	D2	D1	D0
0	**V_{OUT2} Adjustable Output With Resistor Network on ADJ2**	**0**	**0**	**0**	**0**	**0**
	0.6V with ADJ2 Pin connected to V_{OUT2}					
1	0.85	0	0	0	0	1
2	0.9	0	0	0	1	0
3	0.95	0	0	0	1	1
4	1.0	0	0	1	0	0
5	1.05	0	0	1	0	1
6	1.1	0	0	1	1	0
7	1.15	0	0	1	1	1
8	1.2	0	1	0	0	0
9	1.25	0	1	0	0	1
10	1.3	0	1	0	1	0
11	1.35	0	1	0	1	1
12	1.4	0	1	1	0	0
13	1.45	0	1	1	0	1
14	1.5	0	1	1	1	0
15	1.55	0	1	1	1	1
16	1.6	1	0	0	0	0
17	1.7	1	0	0	0	1
18	1.8	1	0	0	1	0
19	1.85	1	0	0	1	1
20	2.0	1	0	1	0	0
21	2.1	1	0	1	0	1
22	2.2	1	0	1	1	0
23	2.3	1	0	1	1	1
24	2.4	1	1	0	0	0
25	2.5	1	1	0	0	1
26	2.6	1	1	0	1	0
27	2.7	1	1	0	1	1
28	2.8	1	1	1	0	0
29	2.85	1	1	1	0	1
30	3.0	1	1	1	1	0
31	3.3	1	1	1	1	1

Copyright © 2010, Texas Instruments Incorporated

APPLICATION INFORMATION

OUTPUT VOLTAGE SETTING

Converter1 Adjustable Default Output Voltage Setting

The output voltage can be calculated to:

$$V_{OUT} = V_{REF} \times \left(1 + \frac{R_{11}}{R_{12}}\right) \text{ with an internal reference voltage } V_{REF} \text{ typical 0.6V} \quad (4)$$

To keep the operating current to a minimum, it is recommended to select R_{12} within a range of 180kΩ to 360kΩ. The sum of R_{12} and R_{11} should not exceed ~1MΩ. For higher output voltages than 3.3V, it is recommended to choose lower values than 180kΩ for R12. Route the DEF_1 line away from noise sources, such as the inductor or the SW1 line. The FB1 line needs to be directly connected to the output capacitor. An internal feed forward capacitor is connected to this pin, therefore there is no need for an external feed forward capacitor for converter 1.

Converter 2

The default output voltage of converter 2 can be set by an external resistor network. For converter 2 the same recommendations apply as for converter 1. In addition to that, a 33pF external feed forward capacitor C_{ff2} for good load transient response must be used.

The output voltage can be calculated to:

$$V_{OUT} = V_{REF} \times \left(1 + \frac{R_{21}}{R_{22}}\right) \text{ with an internal reference voltage } V_{REF} \text{ typical 0.6V} \quad (5)$$

Route the ADJ2 line away from noise sources, such as the inductor or the SW2 line. In case the interface is used for converter 2, connect ADJ2 pin directly to V_{OUT2}

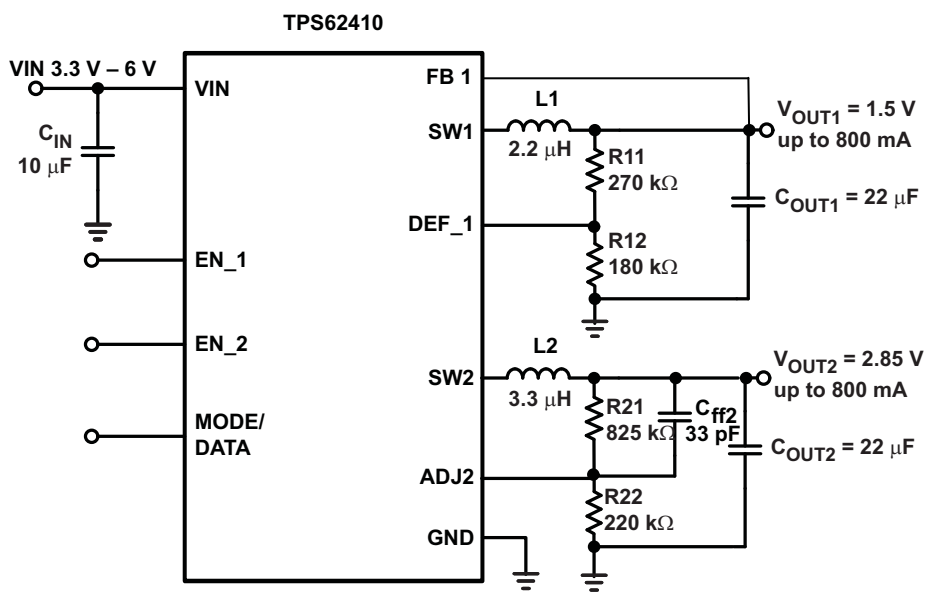

Figure 33. Typical Application Circuit 1.5V/2.85V Adjustable Outputs, low PFM Voltage ripple Optimized

Copyright © 2010, Texas Instruments Incorporated

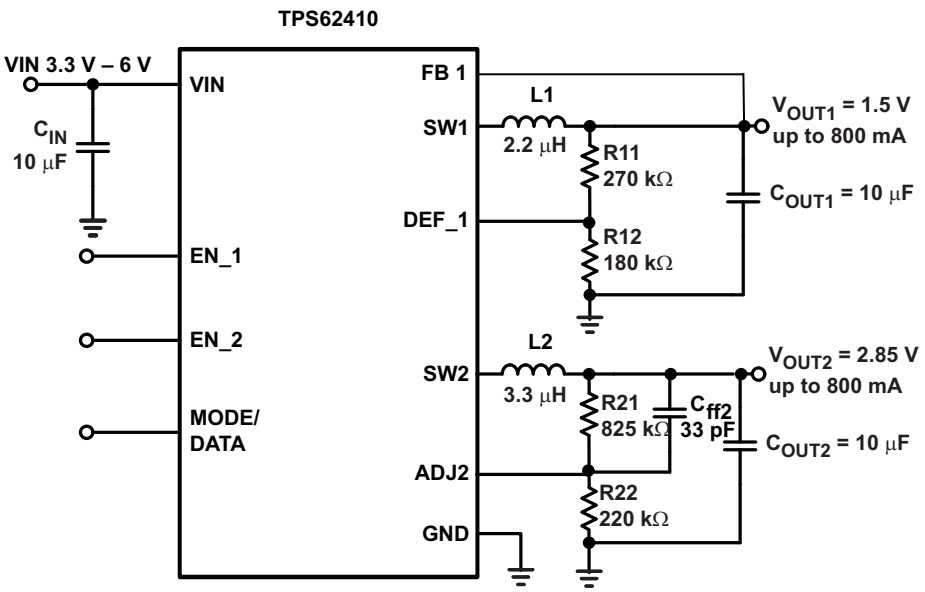

Figure 34. Typical Application Circuit 1.5V/2.85V Adjustable Outputs

OUTPUT FILTER DESIGN (INDUCTOR AND OUTPUT CAPACITOR)

The device is optimized to operate with inductors of 2.2µH to 4.7µH and output capacitors of 10µF to 22µF.

For operation with a 2.2µH inductor, a 22µF capacitor is suggested.

Inductor Selection

The selected inductor has to be rated for its DC resistance and saturation current. The DC resistance of the inductance will influence directly the efficiency of the converter. Therefore an inductor with lowest DC resistance should be selected for highest efficiency.

Equation 6 calculates the maximum inductor current under static load conditions. The saturation current of the inductor should be rated higher than the maximum inductor current as calculated with Equation 7. This is recommended because during heavy load transient the inductor current will rise above the calculated value.

$$\Delta I_L = Vout \times \frac{1 - \frac{Vout}{Vin}}{L \times f} \tag{6}$$

$$I_{Lmax} = I_{outmax} + \frac{\Delta I_L}{2} \tag{7}$$

With:

- f = Switching Frequency (2.25MHz typical)
- L = Inductor Value
- ΔI_L= Peak to Peak inductor ripple current
- I_{Lmax} = Maximum Inductor current

The highest inductor current will occur at maximum Vin.

Open core inductors have a soft saturation characteristic and they can usually handle higher inductor currents versus a comparable shielded inductor.

A more conservative approach is to select the inductor current rating just for the maximum switch current of the corresponding converter. It must be considered, that the core material from inductor to inductor differs and will have an impact on the efficiency especially at high switching frequencies.

Refer to Table 5 and the typical applications for possible inductors.

Table 5. List of Inductors

DIMENSIONS [mm^3]	INDUCTOR TYPE	SUPPLIER
2.8x2.6×1.4	VLF3014	TDK
3×3×1.4	LPS3015	Coilcraft
3.9×3.9×1.7	LPS4018	Coilcraft

Output Capacitor Selection

The advanced fast response voltage mode control scheme of the two converters allows the use of small ceramic capacitors with a typical value of 10µF, without having large output voltage under and overshoots during heavy load transients. Ceramic X7R/X5R capacitors having low ESR values result in lowest output voltage ripple and are therefore recommended.

If ceramic output capacitors are used, the capacitor RMS ripple current rating will always meet the application requirements. The RMS ripple current is calculated as:

$$I_{RMSCout} = Vout \times \frac{1 - \frac{Vout}{Vin}}{L \times f} \times \frac{1}{2 \times \sqrt{3}} \tag{8}$$

At nominal load current the inductive converters operate in PWM mode and the overall output voltage ripple is the sum of the voltage spike caused by the output capacitor ESR plus the voltage ripple caused by charging and discharging the output capacitor:

$$\Delta Vout = Vout \times \frac{1 - \frac{Vout}{Vin}}{L \times f} \times \left(\frac{1}{8 \times Cout \times f} + ESR\right) \tag{9}$$

Where the highest output voltage ripple occurs at the highest input voltage Vin.

At light load currents the converters operate in Power Save Mode and the output voltage ripple is dependent on the output capacitor value. The output voltage ripple is set by the internal comparator delay and the external capacitor. Higher output capacitors like 22µF values minimize the voltage ripple in PFM Mode and tighten DC output accuracy in PFM Mode.

Input Capacitor Selection

Because of the nature of the buck converter having a pulsating input current, a low ESR input capacitor is required for best input voltage filtering and minimizing the interference with other circuits caused by high input voltage spikes. The converters need a ceramic input capacitor of 10µF. The input capacitor can be increased without any limit for better input voltage filtering.

LAYOUT CONSIDERATIONS

As for all switching power supplies, the layout is an important step in the design. Proper function of the device demands careful attention to PCB layout. Care must be taken in board layout to get the specified performance. If the layout is not carefully done, the regulator could show poor line and/or load regulation, stability issues as well as EMI problems. It is critical to provide a low inductance, impedance ground path. Therefore, use wide and short traces for the main current paths as indicated in bold in Figure 35.

The input capacitor should be placed as close as possible to the IC pins as well as the inductor and output capacitor.

Connect the GND Pin of the device to the PowerPAD of the PCB and use this Pad as a star point. For each converter use a common Power GND node and a different node for the Signal GND to minimize the effects of ground noise. Connect these ground nodes together to the PowerPAD (star point) underneath the IC. Keep the common path to the GND PIN, which returns the small signal components and the high current of the output capacitors as short as possible to avoid ground noise. The output voltage sense lines (FB 1, ADJ2, DEF_1) should be connected right to the output capacitor and routed away from noisy components and traces (e.g., SW line). If the EasyScale interface is operated with high transmission rates, the MODE/DATA trace must be routed away from the ADJ2 line to avoid capacitive coupling into the ADJ2 pin. A GND guard ring between the MODE/DATA pin and ADJ2 pin avoids potential noise coupling.

 Copyright © 2010, Texas Instruments Incorporated

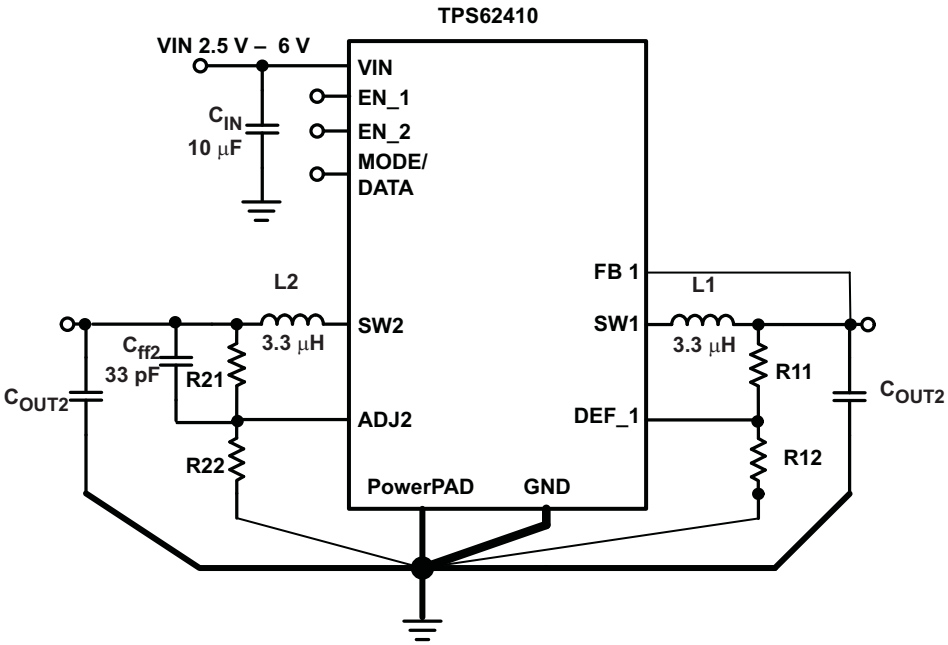

Figure 35. Layout Diagram

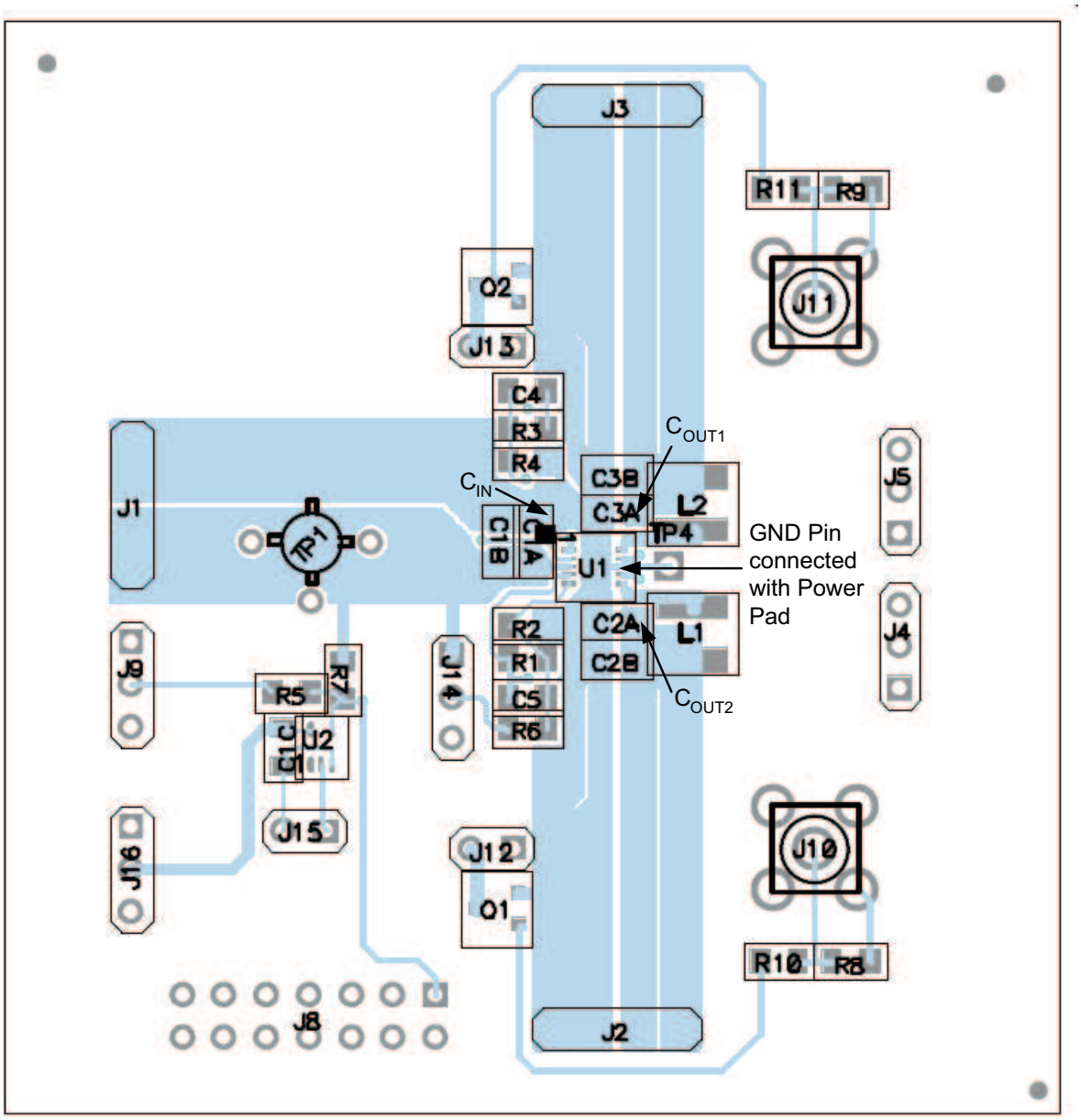

Figure 36. PCB Layout

Copyright © 2010, Texas Instruments Incorporated

PACKAGING INFORMATION

Orderable part number	Status (1)	Material type (2)	Package | Pins	Package qty | Carrier	RoHS (3)	Lead finish/ Ball material (4)	MSL rating/ Peak reflow (5)	Op temp (°C)	Part marking (6)
TPS62410QDRCRQ1	Active	Production	VSON (DRC) | 10	3000 | LARGE T&R	Yes	NIPDAU	Level-3-260C-168 HR	-40 to 125	OFX
TPS62410QDRCRQ1.B	Active	Production	VSON (DRC) | 10	3000 | LARGE T&R	Yes	NIPDAU	Level-3-260C-168 HR	-40 to 125	OFX

(1) **Status:** For more details on status, see our product life cycle.

(2) **Material type:** When designated, preproduction parts are prototypes/experimental devices, and are not yet approved or released for full production. Testing and final process, including without limitation quality assurance, reliability performance testing, and/or process qualification, may not yet be complete, and this item is subject to further changes or possible discontinuation. If available for ordering, purchases will be subject to an additional waiver at checkout, and are intended for early internal evaluation purposes only. These items are sold without warranties of any kind.

(3) **RoHS values:** Yes, No, RoHS Exempt. See the TI RoHS Statement for additional information and value definition.

(4) **Lead finish/Ball material:** Parts may have multiple material finish options. Finish options are separated by a vertical ruled line. Lead finish/Ball material values may wrap to two lines if the finish value exceeds the maximum column width.

(5) **MSL rating/Peak reflow:** The moisture sensitivity level ratings and peak solder (reflow) temperatures. In the event that a part has multiple moisture sensitivity ratings, only the lowest level per JEDEC standards is shown. Refer to the shipping label for the actual reflow temperature that will be used to mount the part to the printed circuit board.

(6) **Part marking:** There may be an additional marking, which relates to the logo, the lot trace code information, or the environmental category of the part.

Multiple part markings will be inside parentheses. Only one part marking contained in parentheses and separated by a "~" will appear on a part. If a line is indented then it is a continuation of the previous line and the two combined represent the entire part marking for that device.

Important Information and Disclaimer: The information provided on this page represents TI's knowledge and belief as of the date that it is provided. TI bases its knowledge and belief on information provided by third parties, and makes no representation or warranty as to the accuracy of such information. Efforts are underway to better integrate information from third parties. TI has taken and continues to take reasonable steps to provide representative and accurate information but may not have conducted destructive testing or chemical analysis on incoming materials and chemicals. TI and TI suppliers consider certain information to be proprietary, and thus CAS numbers and other limited information may not be available for release.

In no event shall TI's liability arising out of such information exceed the total purchase price of the TI part(s) at issue in this document sold by TI to Customer on an annual basis.

OTHER QUALIFIED VERSIONS OF TPS62410-Q1 :

- Catalog : TPS62410

NOTE: Qualified Version Definitions:

- Catalog - TI's standard catalog product

TAPE AND REEL INFORMATION

REEL DIMENSIONS

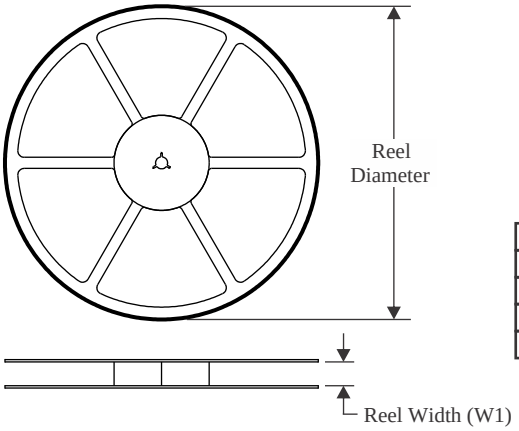

TAPE DIMENSIONS

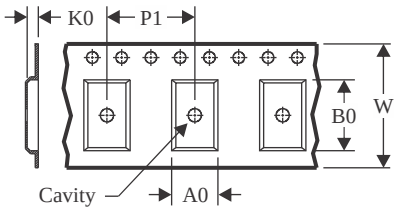

A0	Dimension designed to accommodate the component width
B0	Dimension designed to accommodate the component length
K0	Dimension designed to accommodate the component thickness
W	Overall width of the carrier tape
P1	Pitch between successive cavity centers

QUADRANT ASSIGNMENTS FOR PIN 1 ORIENTATION IN TAPE

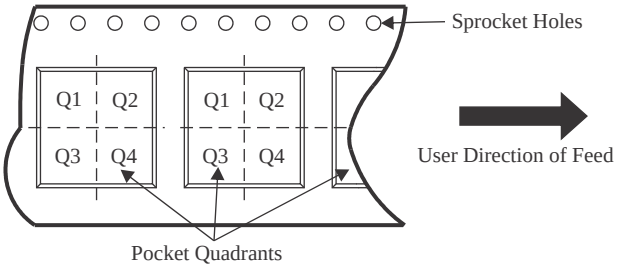

*All dimensions are nominal

Device	Package Type	Package Drawing	Pins	SPQ	Reel Diameter (mm)	Reel Width W1 (mm)	A0 (mm)	B0 (mm)	K0 (mm)	P1 (mm)	W (mm)	Pin1 Quadrant
TPS62410QDRCRQ1	VSON	DRC	10	3000	330.0	12.4	3.3	3.3	1.1	8.0	12.0	Q2

TAPE AND REEL BOX DIMENSIONS

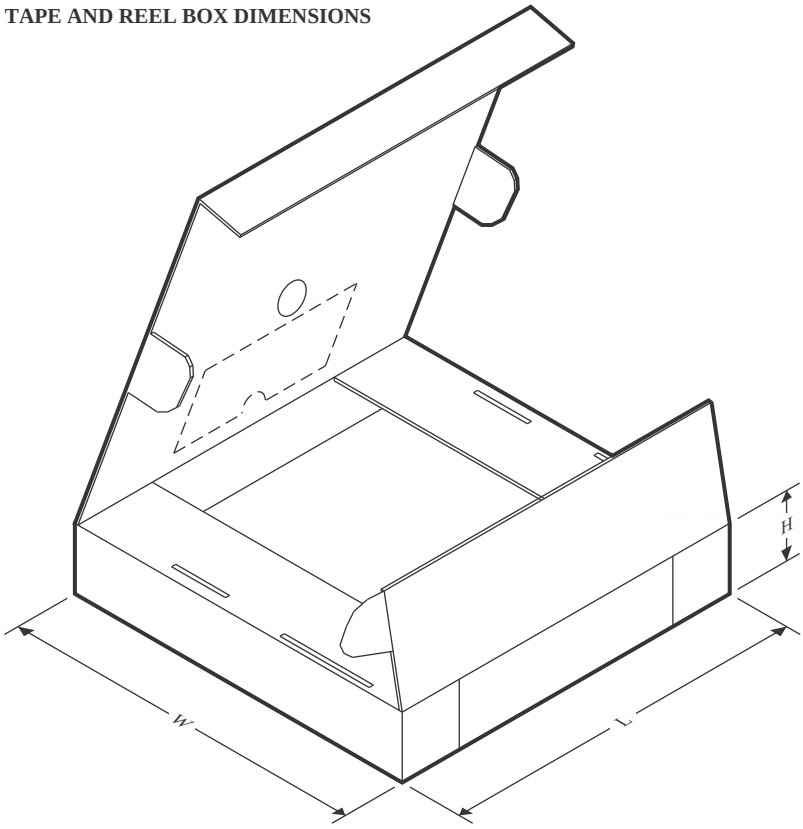

*All dimensions are nominal

Device	Package Type	Package Drawing	Pins	SPQ	Length (mm)	Width (mm)	Height (mm)
TPS62410QDRCRQ1	VSON	DRC	10	3000	356.0	356.0	35.0

GENERIC PACKAGE VIEW

DRC 10

VSON - 1 mm max height

3 x 3, 0.5 mm pitch

PLASTIC SMALL OUTLINE - NO LEAD

This image is a representation of the package family, actual package may vary.
Refer to the product data sheet for package details.

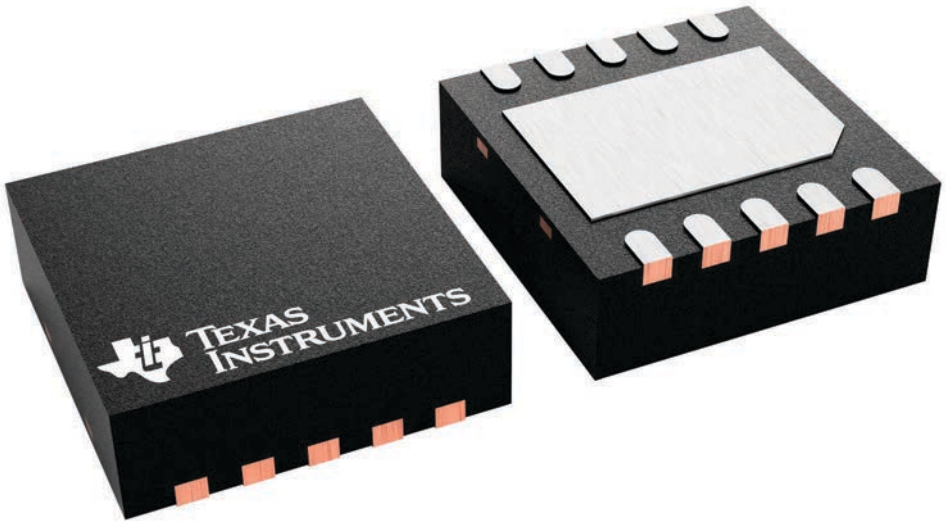

4226193/A

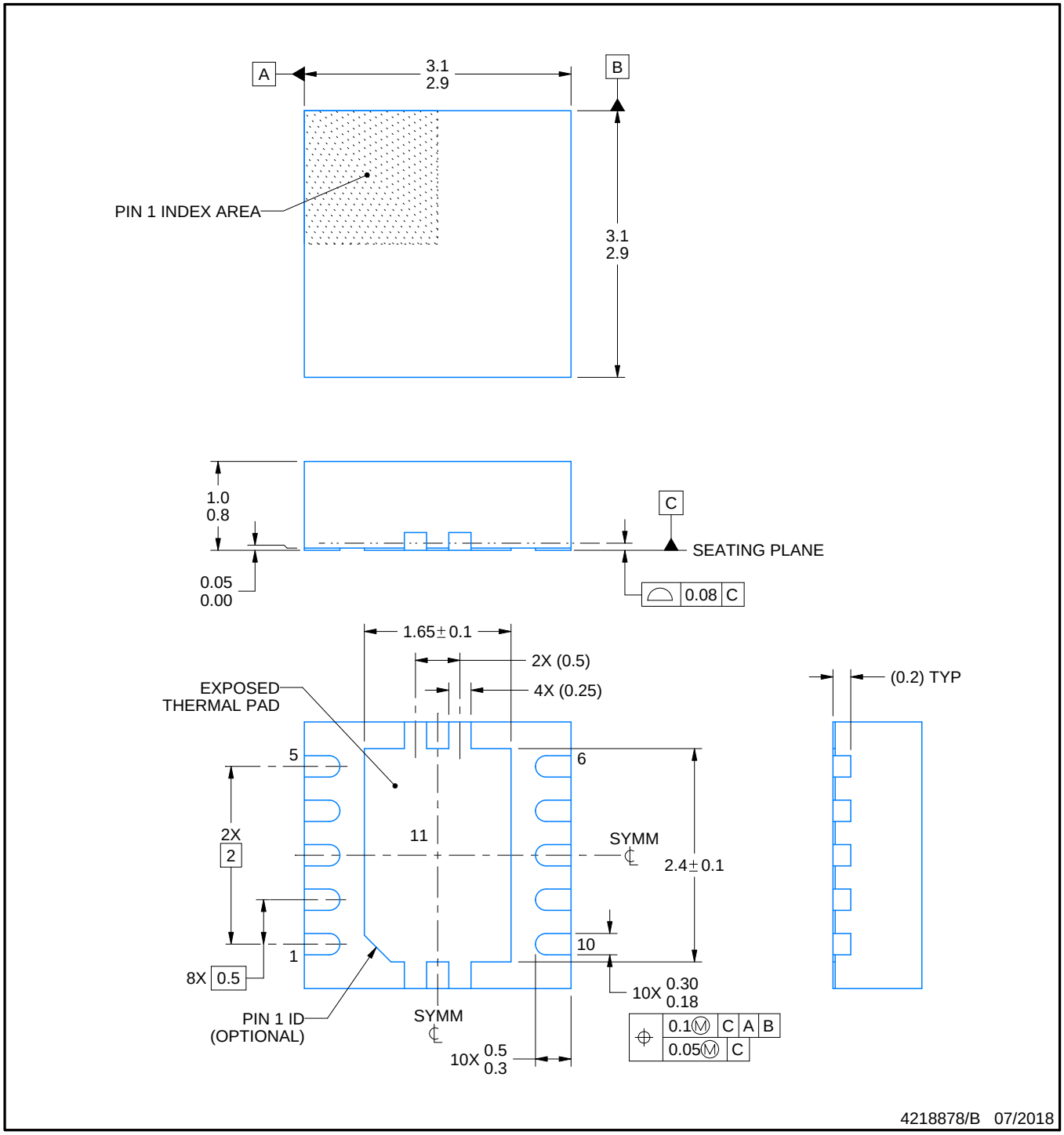

NOTES:

1. All linear dimensions are in millimeters. Any dimensions in parenthesis are for reference only. Dimensioning and tolerancing per ASME Y14.5M.
2. This drawing is subject to change without notice.
3. The package thermal pad must be soldered to the printed circuit board for optimal thermal and mechanical performance.

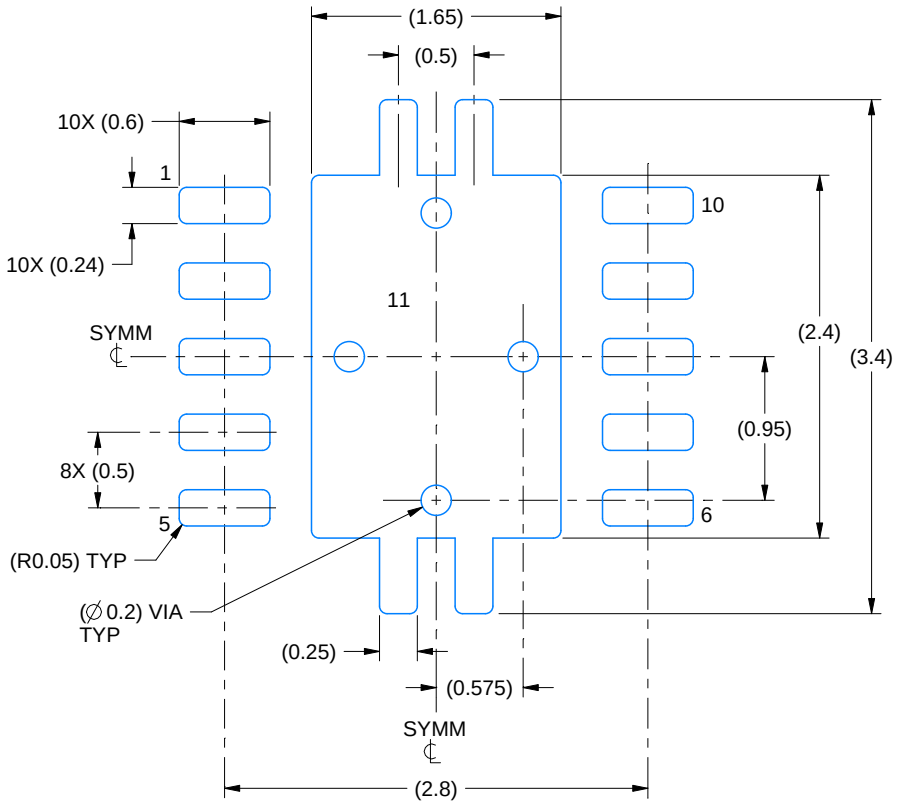

LAND PATTERN EXAMPLE
EXPOSED METAL SHOWN
SCALE:20X

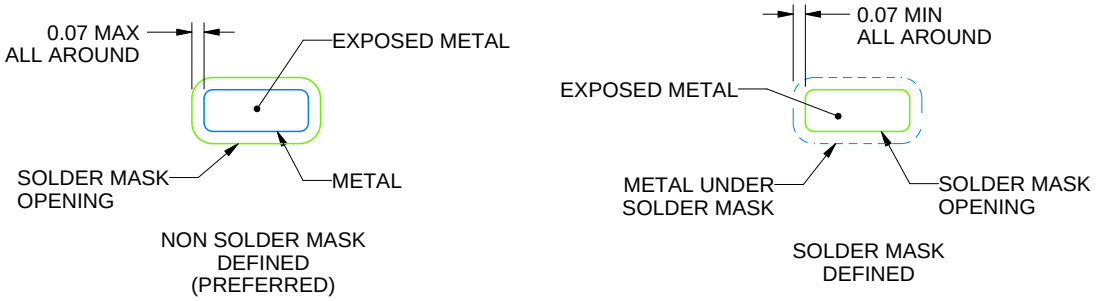

SOLDER MASK DETAILS

4218878/B 07/2018

NOTES: (continued)

4. This package is designed to be soldered to a thermal pad on the board. For more information, see Texas Instruments literature number SLUA271 (www.ti.com/lit/slua271).
5. Vias are optional depending on application, refer to device data sheet. If any vias are implemented, refer to their locations shown on this view. It is recommended that vias under paste be filled, plugged or tented.

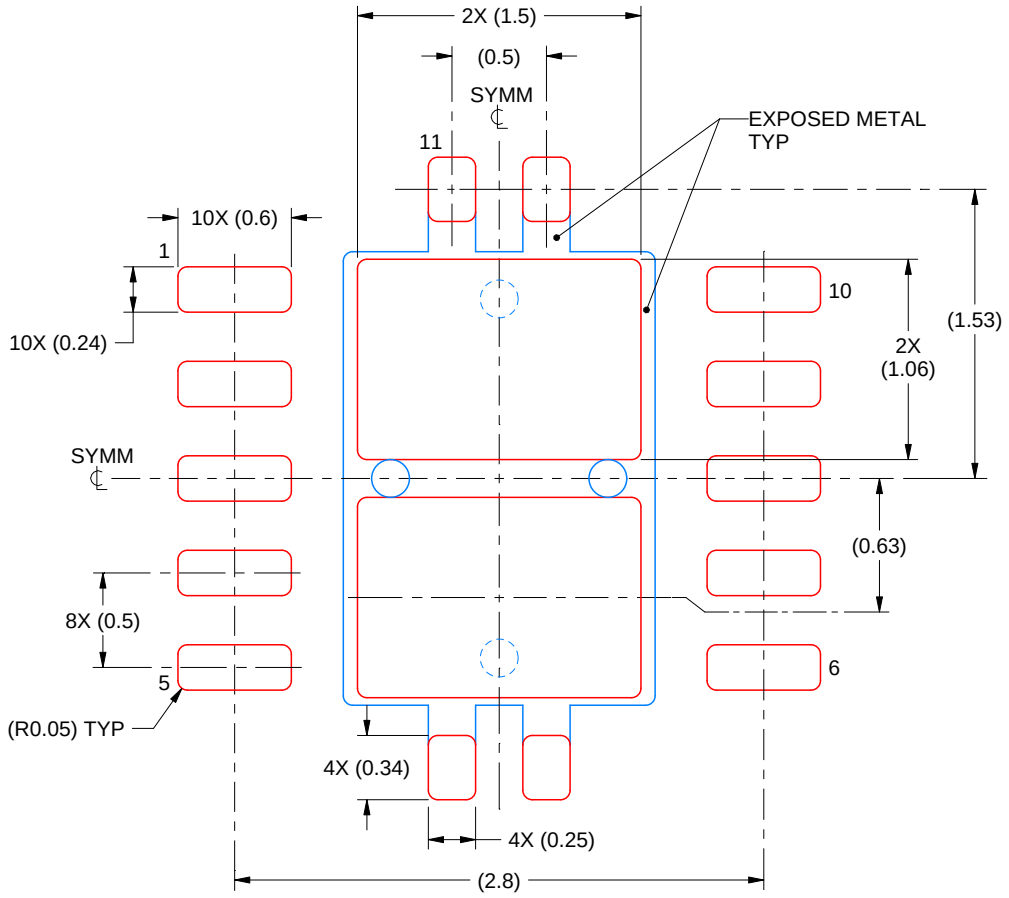

SOLDER PASTE EXAMPLE
BASED ON 0.125 mm THICK STENCIL

EXPOSED PAD 11:
80% PRINTED SOLDER COVERAGE BY AREA
SCALE:25X

4218878/B 07/2018

NOTES: (continued)

6. Laser cutting apertures with trapezoidal walls and rounded corners may offer better paste release. IPC-7525 may have alternate design recommendations.

IMPORTANT NOTICE AND DISCLAIMER

TI PROVIDES TECHNICAL AND RELIABILITY DATA (INCLUDING DATA SHEETS), DESIGN RESOURCES (INCLUDING REFERENCE DESIGNS), APPLICATION OR OTHER DESIGN ADVICE, WEB TOOLS, SAFETY INFORMATION, AND OTHER RESOURCES “AS IS” AND WITH ALL FAULTS, AND DISCLAIMS ALL WARRANTIES, EXPRESS AND IMPLIED, INCLUDING WITHOUT LIMITATION ANY IMPLIED WARRANTIES OF MERCHANTABILITY, FITNESS FOR A PARTICULAR PURPOSE OR NON-INFRINGEMENT OF THIRD PARTY INTELLECTUAL PROPERTY RIGHTS.

These resources are intended for skilled developers designing with TI products. You are solely responsible for (1) selecting the appropriate TI products for your application, (2) designing, validating and testing your application, and (3) ensuring your application meets applicable standards, and any other safety, security, regulatory or other requirements.

These resources are subject to change without notice. TI grants you permission to use these resources only for development of an application that uses the TI products described in the resource. Other reproduction and display of these resources is prohibited. No license is granted to any other TI intellectual property right or to any third party intellectual property right. TI disclaims responsibility for, and you will fully indemnify TI and its representatives against, any claims, damages, costs, losses, and liabilities arising out of your use of these resources.

TI’s products are provided subject to TI’s Terms of Sale or other applicable terms available either on ti.com or provided in conjunction with such TI products. TI’s provision of these resources does not expand or otherwise alter TI’s applicable warranties or warranty disclaimers for TI products.

TI objects to and rejects any additional or different terms you may have proposed.

Mailing Address: Texas Instruments, Post Office Box 655303, Dallas, Texas 75265
Copyright © 2025, Texas Instruments Incorporated