ADS8866 16-bit, 100-kSPS, serial interface, micropower, miniature, single-ended input, SAR analog-to-digital converter

1 Features

- Sample rate: 100 kHz
- No latency output
- Unipolar, single-ended input range: 0 to $+V_{REF}$
- SPI™-compatible serial interface with daisy-chain option
- Excellent AC and DC performance:
  - SNR: 93 dB, THD: –108 dB
  - INL: ±1.0 LSB (typ), ±2.0 LSB (max)
  - DNL: ±1.0 LSB (max), 16-bit NMC
- Wide operating range:
  - AVDD: 2.7 V to 3.6 V
  - DVDD: 1.65 V to 3.6 V (independent of AVDD)
  - REF: 2.5 V to 5 V (independent of AVDD)
  - Operating temperature: –40°C to +85°C
- Low-power dissipation:
  - 0.7 mW at 100 kSPS
  - 70 µW at 10 kSPS
- Power-down current (AVDD): 50 nA
- Full-scale step settling to 16 Bits: 1200 ns
- Packages: VSSOP-10 and VSON-10

2 Applications

- Automatic test equipment (ATE)
- Instrumentation and process controls
- Precision medical equipment
- Low-power, battery-operated instruments

3 Description

The ADS8866 is a 16-bit, 100-kSPS, single-ended input, analog-to-digital converter (ADC). The device operates with a 2.5-V to 5-V external reference, offering a wide selection of signal ranges without additional input signal scaling. The reference voltage setting is independent of, and can exceed, the analog supply voltage (AVDD).

The device offers an SPI-compatible serial interface that also supports daisy-chain operation for cascading multiple devices.

The device supports unipolar single-ended analog inputs in the range of –0.1 V to V_{REF} + 0.1 V.

Device operation is optimized for very low-power operation. Power consumption directly scales with speed. This feature makes the ADS8866 excellent for lower-speed applications.

Device Information(1)

PART NUMBER	PACKAGE	BODY SIZE (NOM)
ADS8866	VSSOP (10)	3.00 mm × 3.00 mm
	VSON (10)	3.00 mm × 3.00 mm

(1) For all available packages, see the orderable addendum at the end of the datasheet.

No Separate LDO Required for the ADC Supply

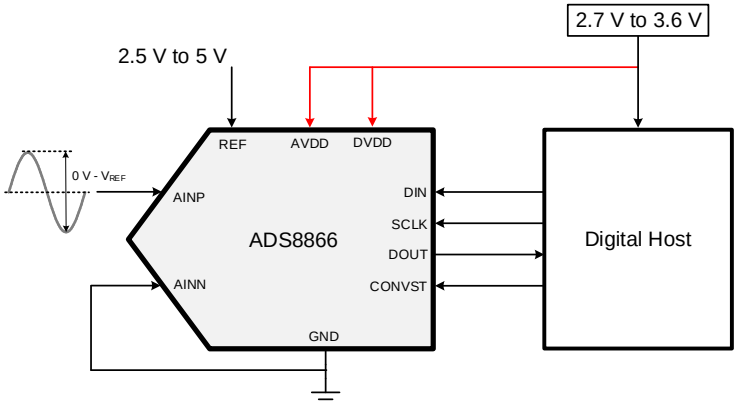

An IMPORTANT NOTICE at the end of this data sheet addresses availability, warranty, changes, use in safety-critical applications, intellectual property matters and other important disclaimers. PRODUCTION DATA.

Table of Contents

1 **Features** ... 1
2 **Applications** ... 1
3 **Description** ... 1
4 **Revision History** ... 2
5 **Device Comparison Table** ... 4
6 **Pin Configuration and Functions** ... 4
7 **Specifications** ... 5
7.1 Absolute Maximum Ratings ... 5
7.2 ESD Ratings ... 5
7.3 Recommended Operating Conditions ... 5
7.4 Thermal Information ... 5
7.5 Electrical Characteristics ... 6
7.6 Timing Requirements: 3-Wire Operation ... 8
7.7 Timing Requirements: 4-Wire Operation ... 8
7.8 Timing Requirements: Daisy-Chain ... 9
7.9 Typical Characteristics ... 11
8 **Parameter Measurement Information** ... 17
8.1 Equivalent Circuits ... 17
9 **Detailed Description** ... 18
9.1 Overview ... 18
9.2 Functional Block Diagram ... 18
9.3 Feature Description ... 18
9.4 Device Functional Modes ... 20
10 **Application and Implementation** ... 26
10.1 Application Information ... 26
10.2 Typical Applications ... 28
11 **Power Supply Recommendations** ... 31
11.1 Power-Supply Decoupling ... 31
11.2 Power Saving ... 31
12 **Layout** ... 33
12.1 Layout Guidelines ... 33
12.2 Layout Example ... 33
13 **Device and Documentation Support** ... 34
13.1 Documentation Support ... 34
13.2 Receiving Notification of Documentation Updates 34
13.3 Community Resources ... 34
13.4 Trademarks ... 34
13.5 Electrostatic Discharge Caution ... 34
13.6 Glossary ... 35
14 **Mechanical, Packaging, and Orderable Information** ... 35

4 Revision History

NOTE: Page numbers for previous revisions may differ from page numbers in the current version.

Changes from Revision B (February 2019) to Revision C	Page
• Added *Input current* row to *Absolute Maximum Ratings* table	5
• Changed Minimum f_{SCLK} required to achieve rated throughput	8
• Changed Maximum t_{SCLK} to achieve rated throughput table.	8

Changes from Revision A (December 2013) to Revision B	Page
• Added *Device Information* table, *ESD Ratings* table, *Recommended Operating Conditions* table, *Parametric Measurement Information* section, *Feature Description* section, *Device Functional Modes* section, *Application and Implementation* section, *Power Supply Recommendations* section, *Layout* section, *Device and Documentation Support* section, and *Mechanical, Packaging, and Orderable Information* section	1
• Changed analog input from *pseudo-differential* to *single-ended* throughout document	1
• Changed MSOP to VSSOP throughout document	1
• Changed title of *Device Comparison Table* from *Family Information*	4
• Changed footnotes of *Family Information* table	4
• Changed LSB footnote in *Electrical Characteristics* table to include how to convert LSB to ppm	6
• Added more information about validity of data on SCLK edges in all interface modes	21
• Changed diagrams and text for better explanation of the daisy-chain feature in the *Daisy-Chain Mode* section	23
• Changed Equation 1 and Equation 2	26
• Changed *Charge-Kickback Filter* section title and functionality description	27

Copyright © 2013–2019, Texas Instruments Incorporated

Changes from Original (May 2013) to Revision A **Page**

- Changed sub-bullets of *AC and DC performance* Features bullet 1
- Changed *Full-scale step settling* Features bullet 1
- Deleted last two Applications bullets 1
- Changed *Description* section 1
- Changed front page graphic 1
- Added *Family Information*, *Absolute Maximum Ratings*, and *Thermal Information* tables 4
- Added *Pin Configurations* section 4
- Added *Electrical Characteristics* table 6
- Added *Timing Characteristics* section 8
- Added *Typical Characteristics* section 11

5 Device Comparison Table

THROUGHPUT	18-BIT, TRUE-DIFFERENTIAL	16-BIT, SINGLE-ENDED	16-BIT, TRUE-DIFFERENTIAL
100 kSPS	ADS8887	ADS8866	ADS8867
250 kSPS	—	ADS8339 (1)	—
400 kSPS	ADS8885	ADS8864	ADS8865
500 kSPS	—	ADS8319 (1)	ADS8318 (1)(2)
680 kSPS	ADS8883	ADS8862	ADS8863
1 MSPS	ADS8881	ADS8860	ADS8861

(1) Pin-to-pin compatible device with AVDD = 5 V.
(2) Supports standard for fully-differential input.

6 Pin Configuration and Functions

DGS Package
10-Pin VSSOP
Top View

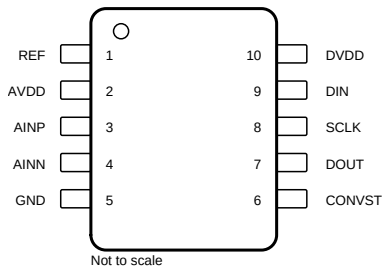

DRC Package
10-Pin VSON
Top View

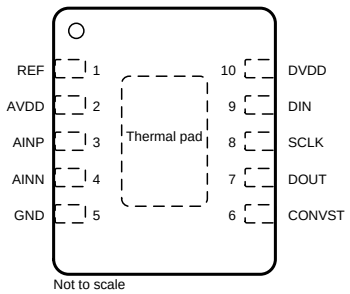

Pin Functions

PIN		TYPE	DESCRIPTION
NAME	NO.		
AINN	4	Analog input	Inverting analog signal input
AINP	3	Analog input	Noninverting analog signal input
AVDD	2	Analog	Analog power supply. This pin must be decoupled to GND with a 1-µF capacitor.
CONVST	6	Digital input	Convert input. This pin also functions as the $\overline{CS}$ input in 3-wire interface mode; see the *Description* and *Timing Requirements* sections for more details.
DIN	9	Digital input	Serial data input. The DIN level at the start of a conversion selects the mode of operation (such as $\overline{CS}$ or daisy-chain mode). This pin also serves as the $\overline{CS}$ input in 4-wire interface mode; see the *Description* and *Timing Requirements* sections for more details.
DOUT	7	Digital output	Serial data output
DVDD	10	Power supply	Digital interface power supply. This pin must be decoupled to GND with a 1-µF capacitor.
GND	5	Analog, digital	Device ground. Note that this pin is a common ground pin for both the analog power supply (AVDD) and digital I/O supply (DVDD). The reference return line is also internally connected to this pin.
REF	1	Analog	Positive reference input. This pin must be decoupled with a 10-µF or larger capacitor.
SCLK	8	Digital input	Clock input for serial interface. Data output (on DOUT) are synchronized with this clock.
Thermal pad		—	Exposed thermal pad **(only for the DRC package option)**. Texas Instruments recommends connecting the thermal pad to the printed circuit board (PCB) ground.

Copyright © 2013–2019, Texas Instruments Incorporated

7 Specifications

7.1 Absolute Maximum Ratings

over operating free-air temperature range (unless otherwise noted)[1]

	MIN	MAX	UNIT
AINP to GND or AINN to GND	–0.3	REF + 0.3	V
AVDD to GND or DVDD to GND	–0.3	4	V
REF to GND	–0.3	5.7	V
Digital input voltage to GND	–0.3	DVDD + 0.3	V
Digital output to GND	–0.3	DVDD + 0.3	V
Input current to any pin except supply pins	–10	10	mA
Operating temperature, T_A	–40	85	°C
Storage temperature, T_{stg}	–65	150	°C

(1) Stresses beyond those listed under *Absolute Maximum Ratings* may cause permanent damage to the device. These are stress ratings only, which do not imply functional operation of the device at these or any other conditions beyond those indicated under *Recommended Operating Conditions*. Exposure to absolute-maximum-rated conditions for extended periods may affect device reliability.

7.2 ESD Ratings

			VALUE	UNIT
$V_{(ESD)}$	Electrostatic discharge	Human-body model (HBM), per ANSI/ESDA/JEDEC JS-001[1]	±2000	V
		Charged-device model (CDM), per JEDEC specification JESD22-C101[2]	±500	

(1) JEDEC document JEP155 states that 500-V HBM allows safe manufacturing with a standard ESD control process.
(2) JEDEC document JEP157 states that 250-V CDM allows safe manufacturing with a standard ESD control process.

7.3 Recommended Operating Conditions

over operating free-air temperature range (unless otherwise noted)

		MIN	NOM	MAX	UNIT
AVDD	Analog power supply		3		V
DVDD	Digital power supply		3		V
V_{REF}	Reference voltage		5		V

7.4 Thermal Information

THERMAL METRIC[1]		ADS8866		UNIT
		DGS (VSSOP)	DRC (VSON)	
		10 PINS	10 PINS	
$R_{\theta JA}$	Junction-to-ambient thermal resistance	151.9	111.1	°C/W
$R_{\theta JC(top)}$	Junction-to-case (top) thermal resistance	45.4	46.4	°C/W
$R_{\theta JB}$	Junction-to-board thermal resistance	72.2	45.9	°C/W
ψ_{JT}	Junction-to-top characterization parameter	3.3	3.5	°C/W
ψ_{JB}	Junction-to-board characterization parameter	70.9	45.5	°C/W
$R_{\theta JC(bot)}$	Junction-to-case (bottom) thermal resistance	N/A	N/A	°C/W

(1) For more information about traditional and new thermal metrics, see the *Semiconductor and IC Package Thermal Metrics* application report.

7.5 Electrical Characteristics

all minimum and maximum specifications are at AVDD = 3 V, DVDD = 3 V, V_{REF} = 5 V, and f_{SAMPLE} = 100 kSPS over the operating free-air temperature range (unless otherwise noted); typical specifications are at T_A = 25°C, AVDD = 3 V, and DVDD = 3 V

PARAMETER		TEST CONDITIONS	MIN	TYP	MAX	UNIT
ANALOG INPUT						
	Full-scale input span (1)	AINP – AINN	0		V_{REF}	V
	Operating input range (1)	AINP	–0.1		V_{REF} + 0.1	V
		AINN	–0.1		+ 0.1	
C_I	Input capacitance	AINP and AINN terminal to GND		59		pF
	Input leakage current	During acquisition for dc input		5		nA
EXTERNAL REFERENCE INPUT						
V_{REF}	Input range		2.5		5	V
	Reference input current	During conversion, 100-kHz sample rate, mid-code		35		µA
	Reference leakage current			250		nA
C_{REF}	Decoupling capacitor at the REF input		10	22		µF
SYSTEM PERFORMANCE						
	Resolution			16		Bits
NMC	No missing codes		16			Bits
DNL	Differential linearity		–0.99	±0.6	1	LSB (2)
INL	Integral linearity (3)		–2	±0.8	2	LSB (2)
E_O	Offset error (4)		–4	±1	4	mV
	Offset error drift with temperature			±1.5		µV/°C
E_G	Gain error		–0.01	±0.005	0.01	%FSR
	Gain error drift with temperature			±0.15		ppm/°C
CMRR	Common-mode rejection ratio	With common-mode input signal = 5 V_{PP} at dc	90	100		dB
PSRR	Power-supply rejection ratio	At mid-code		80		dB
	Transition noise			0.5		LSB
SAMPLING DYNAMICS						
t_{conv}	Conversion time		500		8800	ns
t_{ACQ}	Acquisition time		1200			ns
	Maximum throughput rate with or without latency				100	kHz
	Aperture delay			4		ns
	Aperture jitter, RMS			5		ps
	Step response	Settling to 16-bit accuracy		1200		ns
	Overvoltage recovery	Settling to 16-bit accuracy		1200		ns

(1) Ideal input span, does not include gain or offset error.
(2) LSB = least significant bit. 1 LSB at 16-bits is approximately 15.26 ppm.
(3) This parameter is the endpoint INL, not best-fit.
(4) Measured relative to actual measured reference.

Copyright © 2013–2019, Texas Instruments Incorporated

Electrical Characteristics (continued)

all minimum and maximum specifications are at AVDD = 3 V, DVDD = 3 V, V_{REF} = 5 V, and f_{SAMPLE} = 100 kSPS over the operating free-air temperature range (unless otherwise noted); typical specifications are at T_A = 25°C, AVDD = 3 V, and DVDD = 3 V

PARAMETER			TEST CONDITIONS	MIN	TYP	MAX	UNIT
DYNAMIC CHARACTERISTICS							
SINAD	Signal-to-noise + distortion (5)		At 1 kHz, V_{REF} = 5 V	90.5	92.9		dB
			At 10 kHz, V_{REF} = 5 V		92.9		
			At 49 kHz, V_{REF} = 5 V		88.2		
SNR	Signal-to-noise ratio (5)		At 1 kHz, V_{REF} = 5 V	92	93		dB
			At 10 kHz, V_{REF} = 5 V		93		
			At 49 kHz, V_{REF} = 5 V		88.5		
THD	Total harmonic distortion (5) (6)		At 1 kHz, V_{REF} = 5 V		–108		dB
			At 10 kHz, V_{REF} = 5 V		–108		
			At 49 kHz, V_{REF} = 5 V		–101		
SFDR	Spurious-free dynamic range (5)		At 1 kHz, V_{REF} = 5 V		108		dB
			At 10 kHz, V_{REF} = 5 V		108		
			At 49 kHz, V_{REF} = 5 V		101		
$BW_{–3dB}$	–3-dB small-signal bandwidth				30		MHz
POWER-SUPPLY REQUIREMENTS							
	Power-supply voltage	AVDD	Analog supply	2.7	3	3.6	V
		DVDD	Digital supply range	1.65	1.8	3.6	
	Supply current	AVDD	100-kHz sample rate, AVDD = 3 V		0.23	0.4	mA
P_{VA}	Power dissipation		100-kHz sample rate, AVDD = 3 V		0.7	1.2	mW
			10-kHz sample rate, AVDD = 3 V		70		µW
IA_{PD}	Device power-down current (7)				50		nA
DIGITAL INPUTS: LOGIC FAMILY (CMOS)							
V_{IH}	High-level input voltage		1.65 V < DVDD < 2.3 V	0.8 × DVDD		DVDD + 0.3	V
			2.3 V < DVDD < 3.6 V	0.7 × DVDD		DVDD + 0.3	
V_{IL}	Low-level input voltage		1.65 V < DVDD < 2.3 V	–0.3		0.2 × DVDD	V
			2.3 V < DVDD < 3.6 V	–0.3		0.3 × DVDD	
I_{LK}	Digital input leakage current				±10	±100	nA
DIGITAL OUTPUTS: LOGIC FAMILY (CMOS)							
V_{OH}	High-level output voltage		I_O = 500-µA source, C_{LOAD} = 20 pF	0.8 × DVDD		DVDD	V
V_{OL}	Low-level output voltage		I_O = 500-µA sink, C_{LOAD} = 20 pF	0		0.2 × DVDD	V
TEMPERATURE RANGE							
T_A	Operating free-air temperature			–40		85	°C

(5) All specifications expressed in decibels (dB) refer to the full-scale input (FSR) and are tested with an input signal 0.5 dB below full-scale, unless otherwise specified.
(6) Calculated on the first nine harmonics of the input frequency.
(7) The device automatically enters a power-down state at the end of every conversion, and remains in power-down during the acquisition phase.

7.6 Timing Requirements: 3-Wire Operation

all specifications are at AVDD = 3 V, DVDD = 3 V, and over the operating free-air temperature range (unless otherwise noted)

		MIN	TYP	MAX	UNIT
t_{ACQ}	Acquisition time	1200			ns
t_{conv}	Conversion time	500		8800	ns
$1/f_{sample}$	Time between conversions	10000			ns
$t_{wh\text{-}CNV}$	Pulse duration: CONVST high	10			ns
f_{SCLK}	SCLK frequency		16	66.6	MHz
t_{SCLK}	SCLK period	15	62.5		ns
t_{clkl}	SCLK low time	0.45		0.55	t_{SCLK}
t_{clkh}	SCLK high time	0.45		0.55	t_{SCLK}
$t_{h\text{-}CK\text{-}DO}$	SCLK falling edge to current data invalid	3			ns
$t_{d\text{-}CK\text{-}DO}$	SCLK falling edge to next data valid delay			13.4	ns
$t_{d\text{-}CNV\text{-}DO}$	Enable time: CONVST low to MSB valid			12.3	ns
$t_{d\text{-}CNV\text{-}DOhz}$	Disable time: CONVST high or last SCLK falling edge to DOUT 3-state ($\overline{CS}$ mode)			13.2	ns
t_{quiet}	Quiet time	20			ns

7.7 Timing Requirements: 4-Wire Operation

all specifications are at AVDD = 3 V, DVDD = 3 V, and over the operating free-air temperature range (unless otherwise noted)

		MIN	TYP	MAX	UNIT
t_{ACQ}	Acquisition time	1200			ns
t_{conv}	Conversion time	500		8800	ns
$1/f_{sample}$	Time between conversions	10000			ns
$t_{wh\text{-}DI}$	Pulse duration: DIN high	10			ns
$t_{wl\text{-}CNV}$	Pulse width: CONVST low	20			ns
$t_{d\text{-}DI\text{-}DO}$	Delay time: DIN low to MSB valid			12.3	ns
$t_{d\text{-}DI\text{-}DOhz}$	Delay time: DIN high or last SCLK falling edge to DOUT 3-state			13.2	ns
$t_{su\text{-}DI\text{-}CNV}$	Setup time: DIN high to CONVST rising edge	7.5			ns
$t_{h\text{-}DI\text{-}CNV}$	Hold time: DIN high from CONVST rising edge	0			ns

Copyright © 2013–2019, Texas Instruments Incorporated

7.8 Timing Requirements: Daisy-Chain

all specifications are at AVDD = 3 V, DVDD = 3 V, and over the operating free-air temperature range (unless otherwise noted)

		MIN	TYP	MAX	UNIT
t_{ACQ}	Acquisition time	1200			ns
t_{conv}	Conversion time	500		8800	ns
$1/f_{sample}$	Time between conversions	1000 0			ns
$t_{su\text{-}CK\text{-}CNV}$	Setup time: SCLK valid to CONVST rising edge	5			ns
$t_{h\text{-}CK\text{-}CNV}$	Hold time: SCLK valid from CONVST rising edge	5			ns
$t_{su\text{-}DI\text{-}CNV}$	Setup time: DIN low to CONVST rising edge (see Figure 2)	7.5			ns
$t_{h\text{-}DI\text{-}CNV}$	Hold time: DIN low from CONVST rising edge	0			ns
$t_{su\text{-}DI\text{-}CK}$	Setup time: DIN valid to SCLK falling edge	1.5			ns

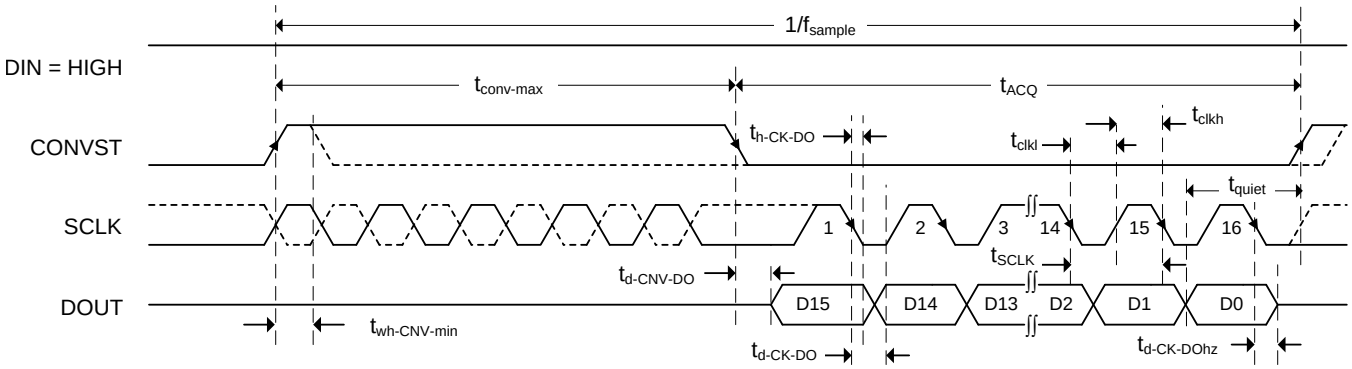

Figure 1. 3-Wire Operation: CONVST Functions as Chip Select

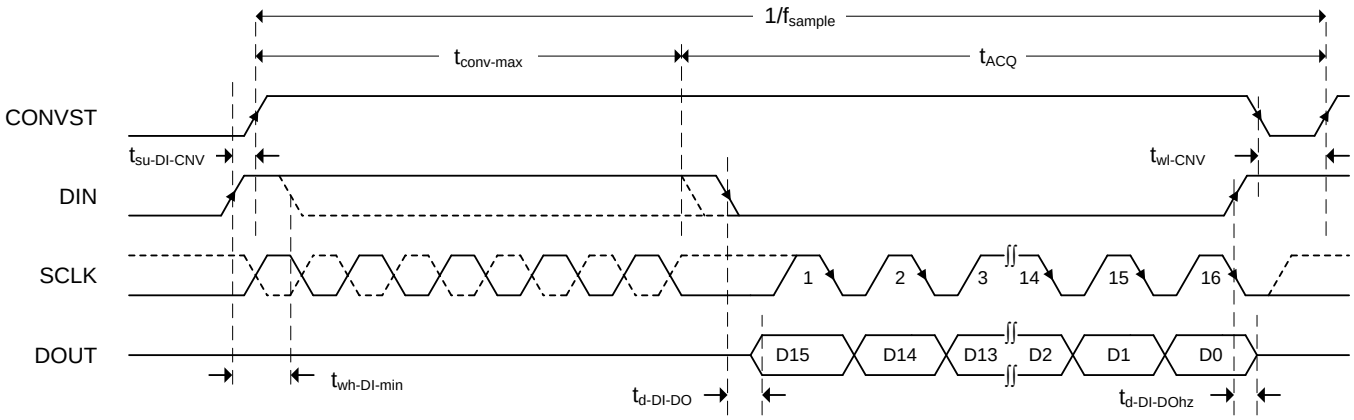

Figure 2. 4-Wire Operation: DIN Functions as Chip Select

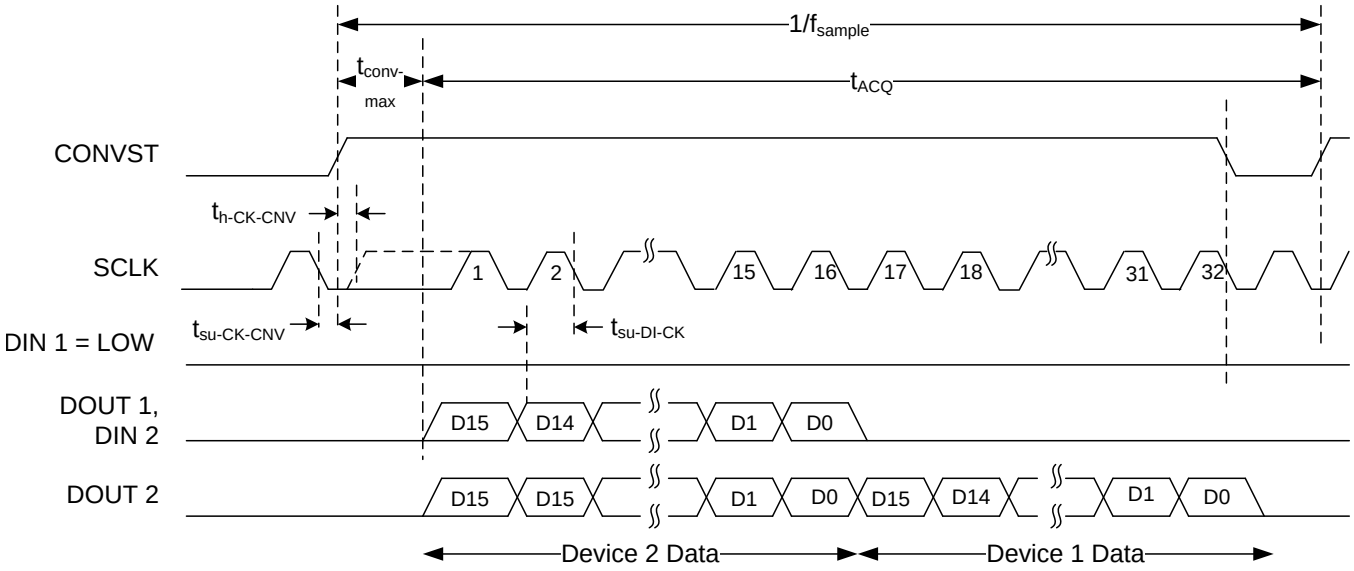

Figure 3. Daisy-Chain Operation: Two Devices

Copyright © 2013–2019, Texas Instruments Incorporated

7.9 Typical Characteristics

at T_A = 25°C, AVDD = 3 V, DVDD = 3 V, V_{REF} = 5 V, and f_{SAMPLE} = 100 kSPS (unless otherwise noted)

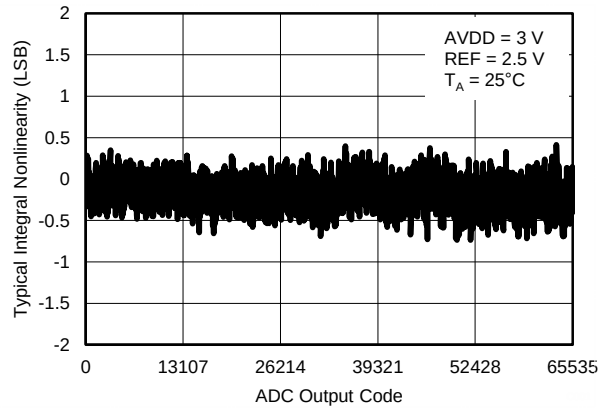

Figure 4. Typical INL (V_{REF} = 2.5 V)

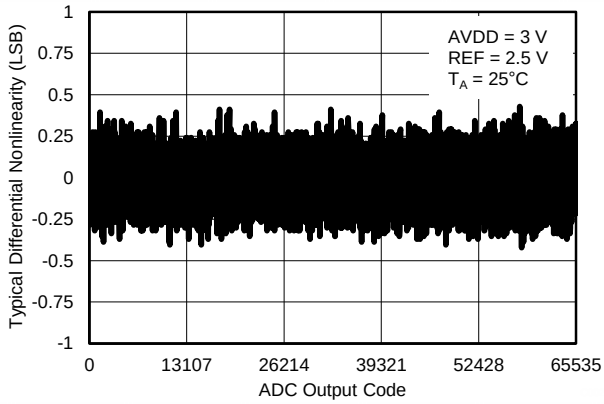

Figure 5. Typical DNL (V_{REF} = 2.5 V)

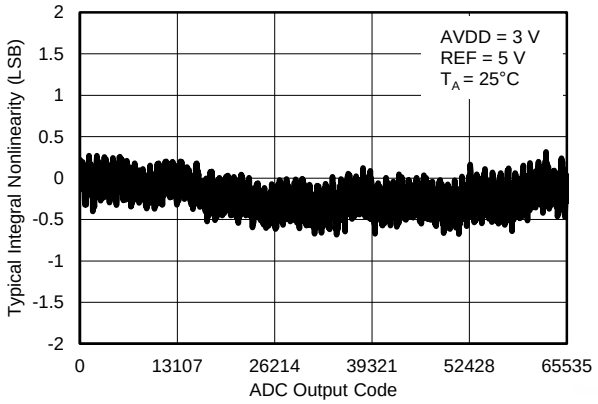

Figure 6. Typical INL (V_{REF} = 5 V)

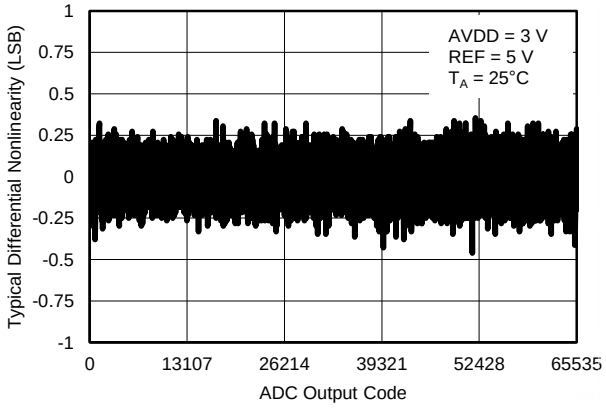

Figure 7. Typical DNL (V_{REF} = 5 V)

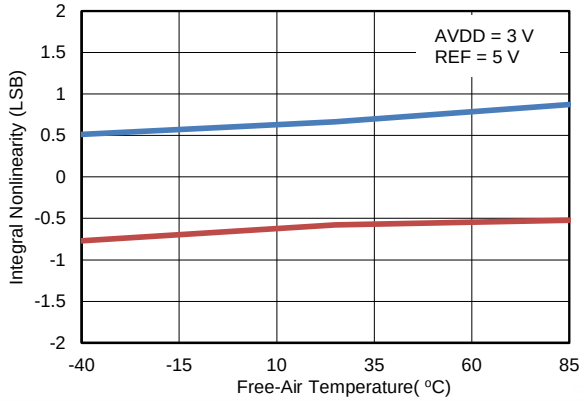

Figure 8. INL vs Temperature

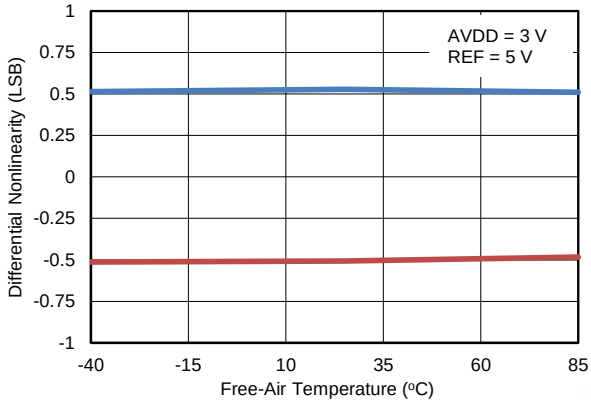

Figure 9. DNL vs Temperature

Typical Characteristics (continued)

at T_A = 25°C, AVDD = 3 V, DVDD = 3 V, V_{REF} = 5 V, and f_{SAMPLE} = 100 kSPS (unless otherwise noted)

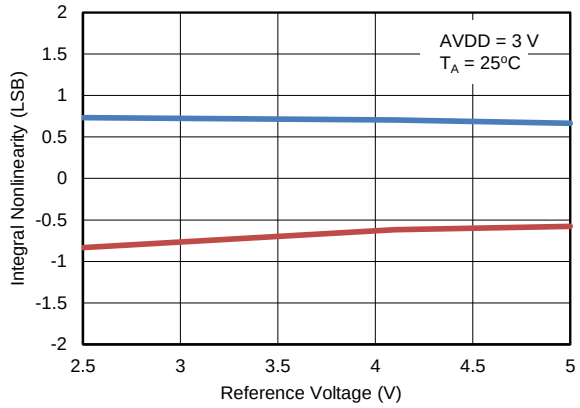

Figure 10. INL vs Reference Voltage

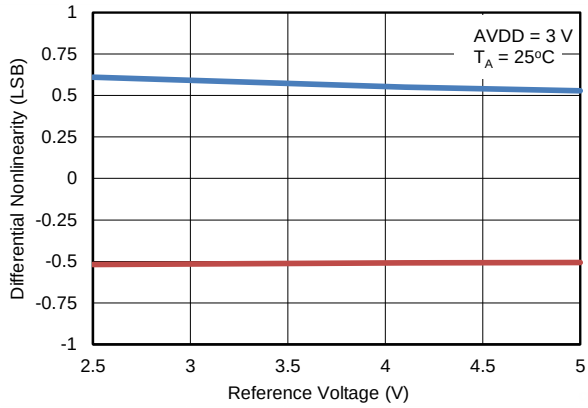

Figure 11. DNL vs Reference Voltage

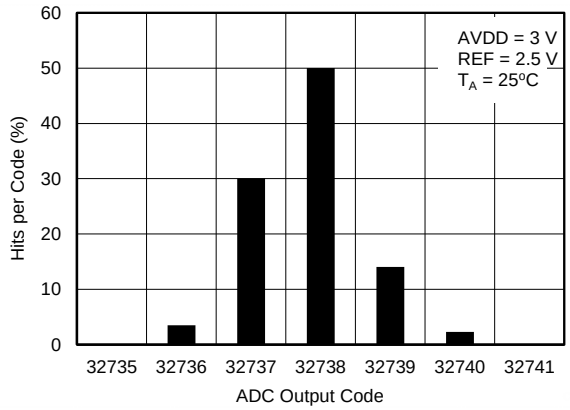

Figure 12. DC Input Histogram (V_{REF} = 2.5 V)

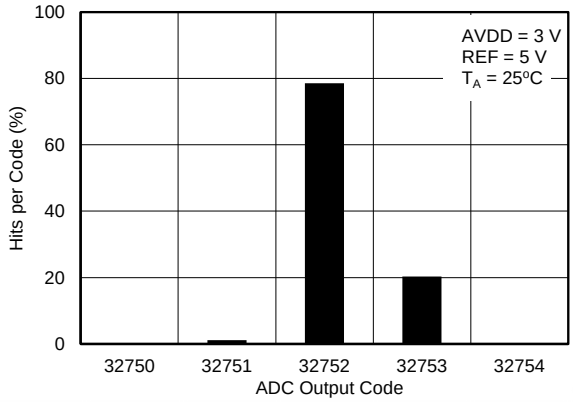

Figure 13. DC Input Histogram (V_{REF} = 5 V)

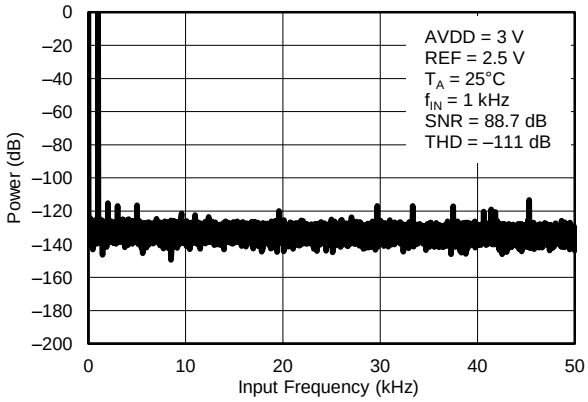

Figure 14. Typical FFT (V_{REF} = 2.5 V)

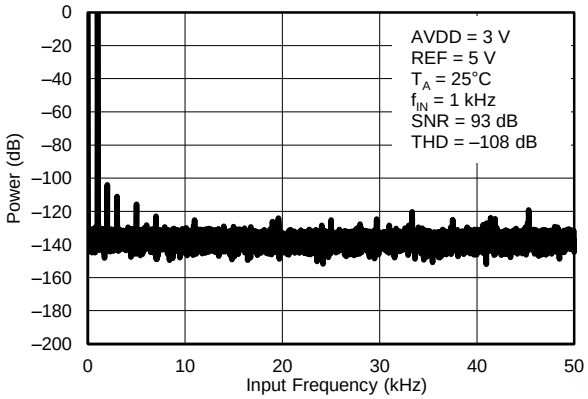

Figure 15. Typical FFT (V_{REF} = 5 V)

Copyright © 2013–2019, Texas Instruments Incorporated

Typical Characteristics (continued)

at T_A = 25°C, AVDD = 3 V, DVDD = 3 V, V_{REF} = 5 V, and f_{SAMPLE} = 100 kSPS (unless otherwise noted)

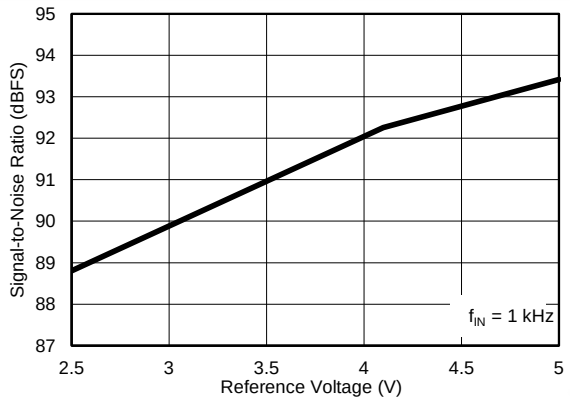

Figure 16. SNR vs Reference Voltage

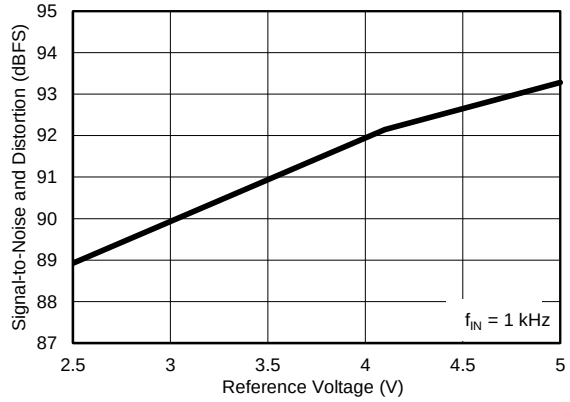

Figure 17. SINAD vs Reference Voltage

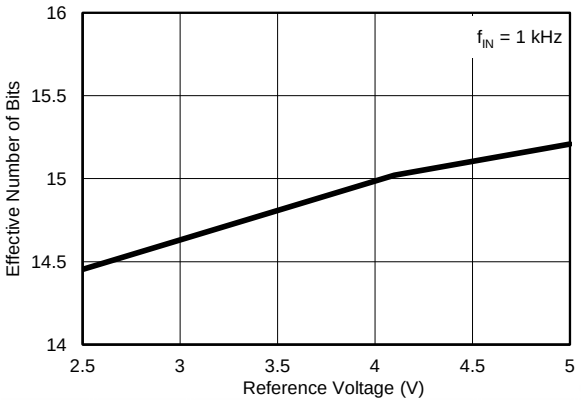

Figure 18. ENOB vs Reference Voltage

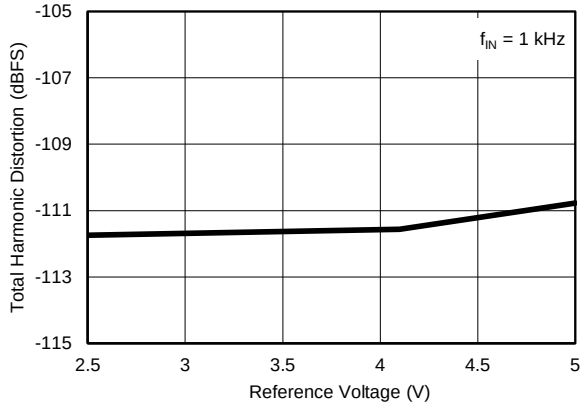

Figure 19. THD vs Reference Voltage

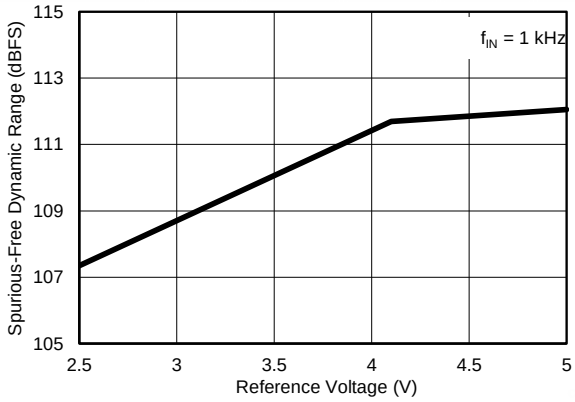

Figure 20. SFDR vs Reference Voltage

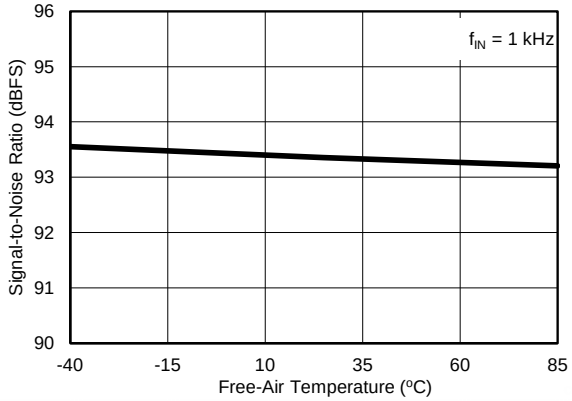

Figure 21. SNR vs Temperature

Typical Characteristics (continued)

at T_A = 25°C, AVDD = 3 V, DVDD = 3 V, V_{REF} = 5 V, and f_{SAMPLE} = 100 kSPS (unless otherwise noted)

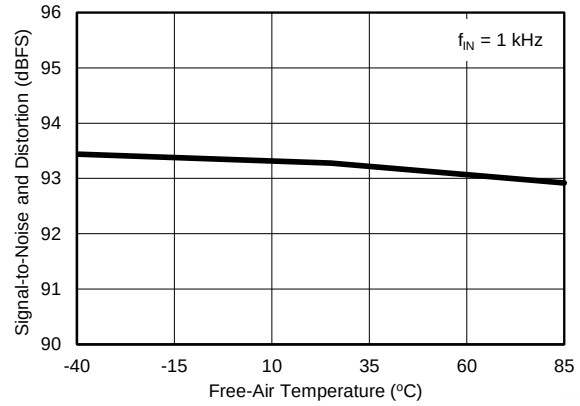

Figure 22. SINAD vs Temperature

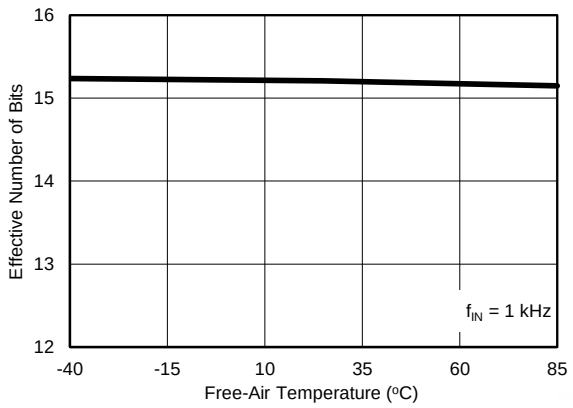

Figure 23. ENOB vs Temperature

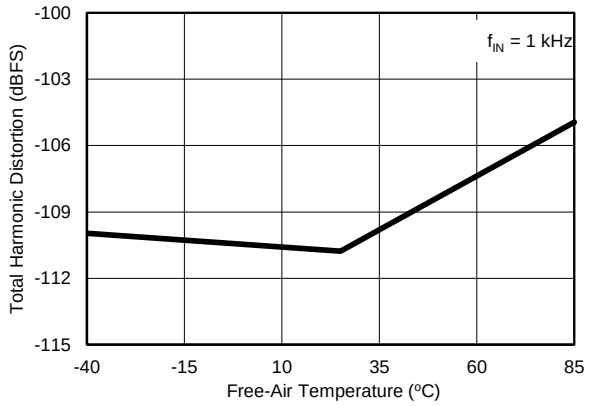

Figure 24. THD vs Temperature

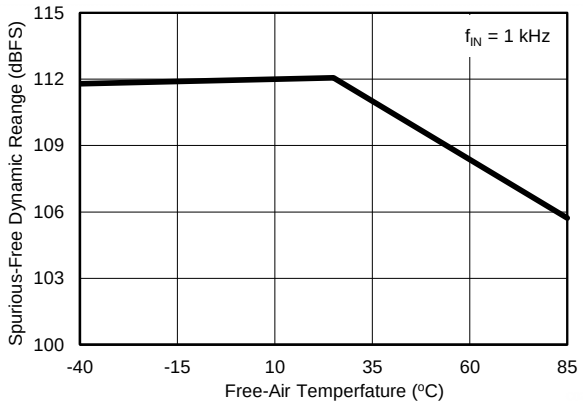

Figure 25. SFDR vs Temperature

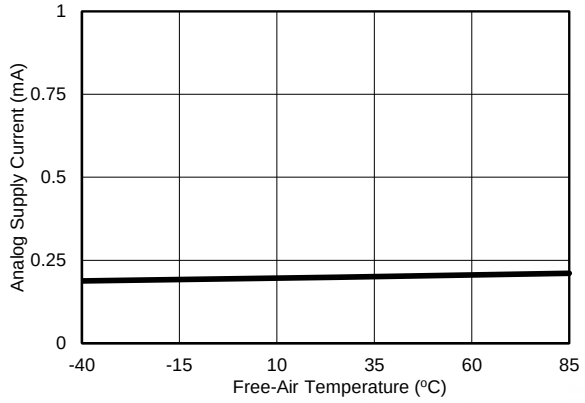

Figure 26. Supply Current vs Temperature

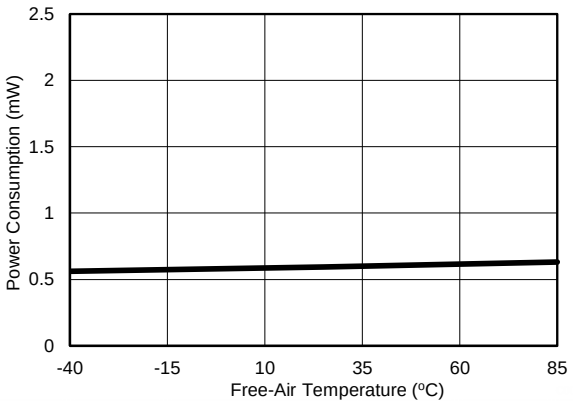

Figure 27. Power Consumption vs Temperature

Copyright © 2013–2019, Texas Instruments Incorporated

Typical Characteristics (continued)

at T_A = 25°C, AVDD = 3 V, DVDD = 3 V, V_{REF} = 5 V, and f_{SAMPLE} = 100 kSPS (unless otherwise noted)

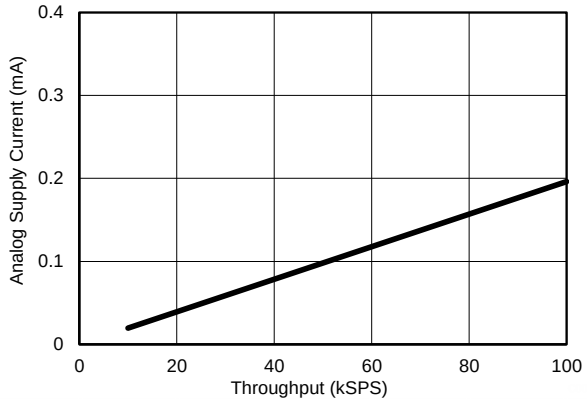

Figure 28. Supply Current vs Throughput

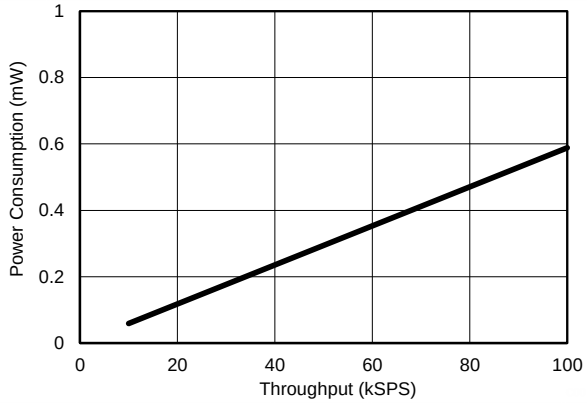

Figure 29. Power Consumption vs Throughput

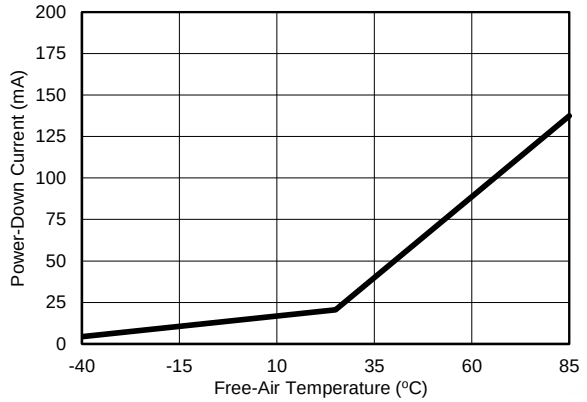

Figure 30. Power-Down Current vs Temperature

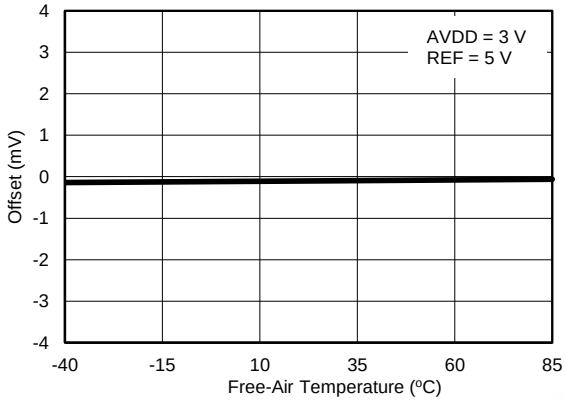

Figure 31. Offset vs Temperature

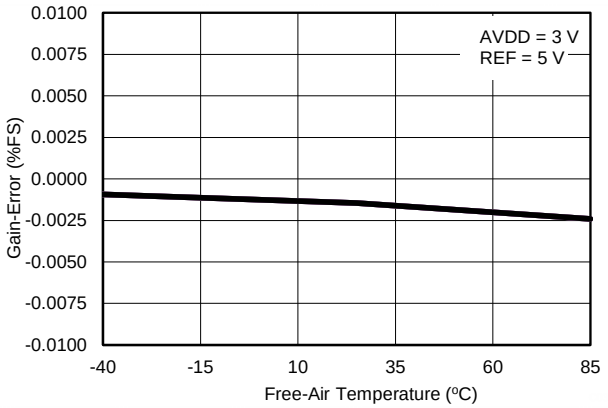

Figure 32. Gain Error vs Temperature

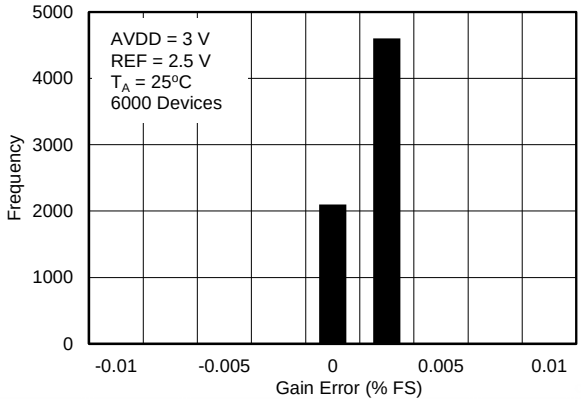

Figure 33. Typical Distribution of Gain Error

Typical Characteristics (continued)

at T_A = 25°C, AVDD = 3 V, DVDD = 3 V, V_{REF} = 5 V, and f_{SAMPLE} = 100 kSPS (unless otherwise noted)

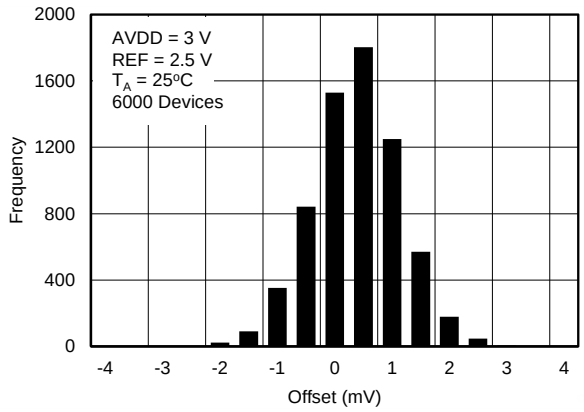

Figure 34. Typical Distribution of Offset Error

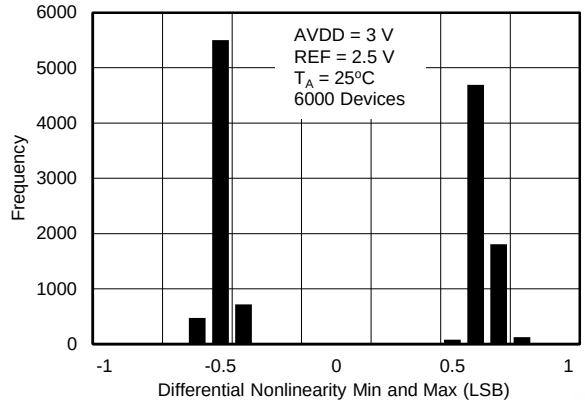

Figure 35. Typical Distribution of Differential Nonlinearity (Minimum and Maximum)

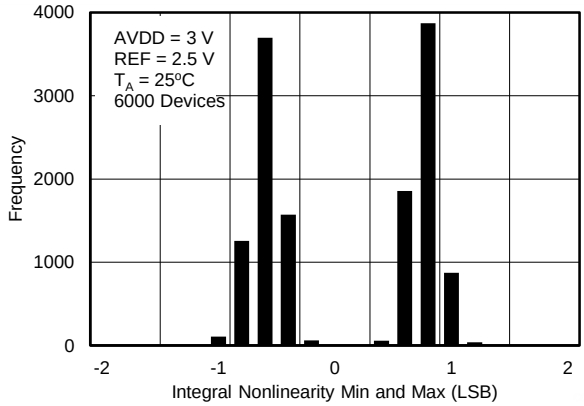

Figure 36. Typical Distribution of Integral Nonlinearity (Minimum and Maximum)

Copyright © 2013–2019, Texas Instruments Incorporated

8 Parameter Measurement Information

8.1 Equivalent Circuits

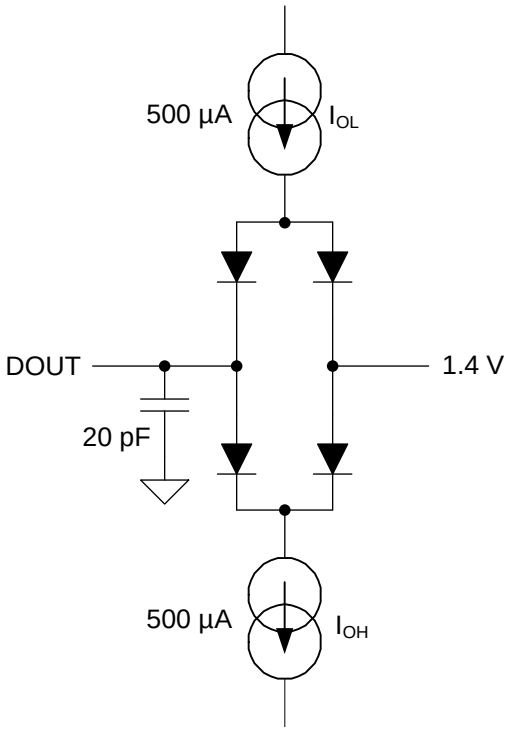

Figure 37. Load Circuit for Digital Interface Timing

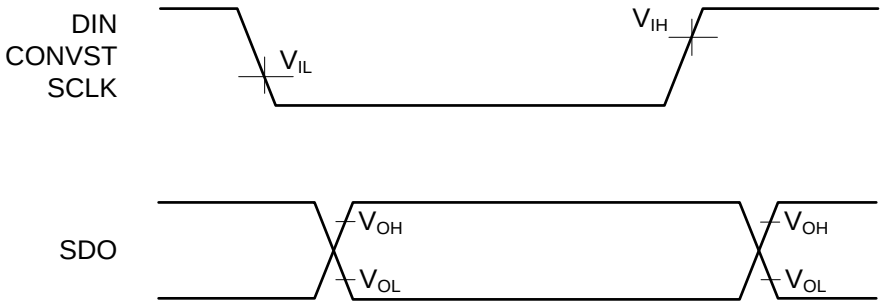

Figure 38. Voltage Levels for Timing

9 Detailed Description

9.1 Overview

The ADS8866 is a high-speed, successive approximation register (SAR), analog-to-digital converter (ADC) from a 16- and 18-bit device family. This compact device features high performance. Power consumption is inherently low and scales linearly with sampling speed. The architecture is based on charge redistribution that inherently includes a sample-and-hold (S/H) function.

The ADS8866 supports a single-ended analog input across two pins (INP and INN). When a conversion is initiated, the differential input on these pins is sampled on the internal capacitor array. While a conversion is in progress, both the INP and INN inputs are disconnected from the internal circuit.

The ADS8866 uses an internal clock to perform conversions. The device reconnects the sampling capacitors to the INP and INN pins after conversion and then enters an acquisition phase. During the acquisition phase, the device is powered down and the conversion result can be read.

The device digital output is available in SPI-compatible format, thus making interfacing with microprocessors, digital signal processors (DSPs), or field-programmable gate arrays (FPGAs) easy.

9.2 Functional Block Diagram

Figure 39 shows the detailed functional block diagram for the device.

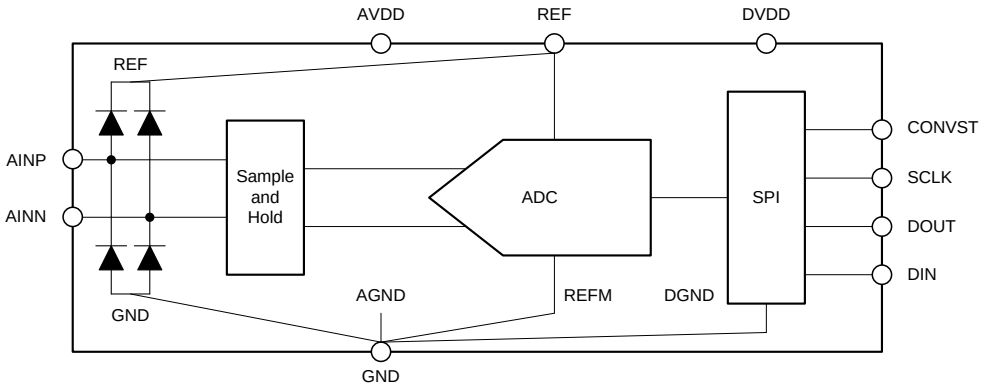

Figure 39. Detailed Block Diagram

9.3 Feature Description

9.3.1 Analog Input

As shown in Figure 39, the device features a single-ended analog input. AINP can swing from GND – 0.1 V to V_{REF} + 0.1 V and AINN can swing from GND – 0.1 V to GND + 0.1 V. Both positive and negative inputs are individually sampled on 55-pF sampling capacitors and the device converts for the voltage difference between the two sampled values: $V_{INP} – V_{INN}$. The single-ended signal range is 0 V to V_{REF}.

Copyright © 2013–2019, Texas Instruments Incorporated

Feature Description (continued)

Figure 40 shows an equivalent circuit of the input sampling stage. The sampling switch is represented by a 96-Ω resistance in series with the ideal switch; see the *ADC Input Driver* section for more details on the recommended driving circuits.

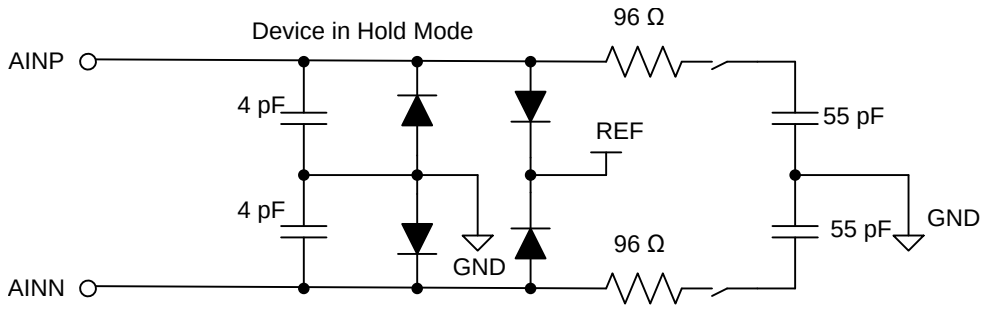

Figure 40. Input Sampling Stage Equivalent Circuit

Figure 39 and Figure 40 illustrate electrostatic discharge (ESD) protection diodes to REF and GND from both analog inputs. Make sure that these diodes do not turn on by keeping the analog inputs within the specified range.

9.3.2 Reference

The device operates with an external reference voltage and switches binary-weighted capacitors onto the reference terminal (REF pin) during the conversion process. The switching frequency is proportional to the internal conversion clock frequency but the dynamic charge requirements are a function of the absolute value of the input voltage and reference voltage. This dynamic load must be supported by a reference driver circuit without degrading the noise and linearity performance of the device. During the acquisition process, the device automatically powers down and does not take any dynamic current from the external reference source. The basic circuit diagram for such a reference driver circuit for precision ADCs is shown in Figure 41; see the *ADC Reference Driver* section for more details on the application circuits.

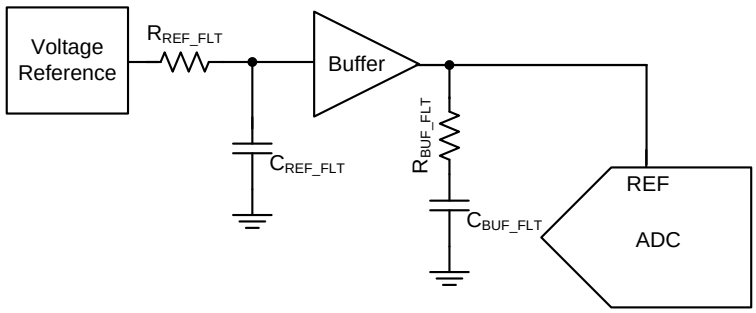

Figure 41. Reference Driver Schematic

9.3.3 Clock

The device uses an internal clock for conversion. Conversion duration may vary but is bounded by the minimum and maximum value of t_{conv}, as specified in the *Timing Requirements* section. An external SCLK is only used for a serial data read operation. Data are read after a conversion completes and when the device is in acquisition phase for the next sample.

Feature Description (continued)

9.3.4 ADC Transfer Function

The ADS8866 is a unipolar, single-ended input device. The device output is in straight binary format.

Figure 42 shows ideal characteristics for the device. The full-scale range for the ADC input (AINP – AINN) is equal to the reference input voltage to the ADC (V_{REF}). One LSB is equal to [(V_{REF} / 2^{16})].

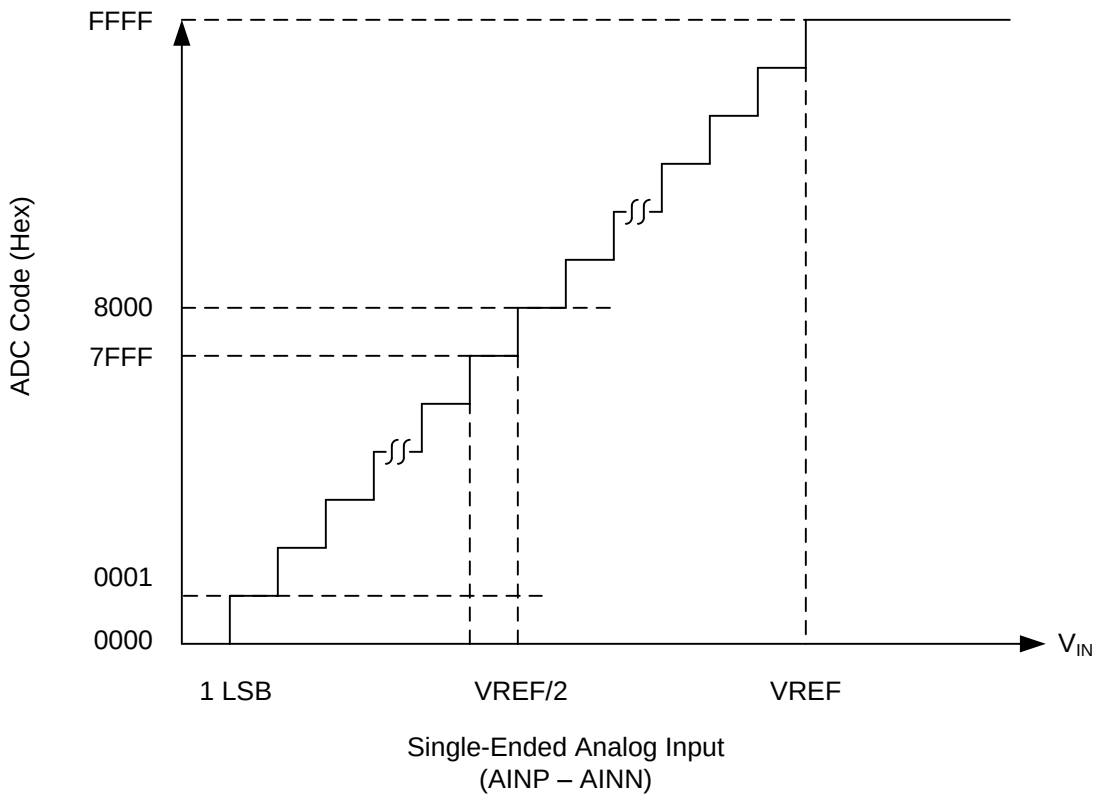

Figure 42. Single-Ended Transfer Characteristics

9.4 Device Functional Modes

The ADS8866 is a low pin-count device. However, the device offers three different options for interfacing with the digital host.

These options can be broadly classified as being either *$\overline{CS}$ mode* (in either a 3- or 4-wire interface) or *daisy-chain mode*. The device operates in $\overline{CS}$ mode if DIN is high at the CONVST rising edge. If DIN is low at the CONVST rising edge, or if DIN and CONVST are connected together, the device operates in daisy-chain mode.

The 3-wire interface in $\overline{CS}$ mode is useful for applications that need galvanic isolation on-board. The 4-wire interface in $\overline{CS}$ mode allows the user to sample the analog input independent of the serial interface timing and, therefore, allows easier control of an individual device while having multiple, similar devices on-board. The daisy-chain mode is provided to hook multiple devices in a chain similar to a shift register and is useful in reducing component count and the number of signal traces on the board.

9.4.1 $\overline{CS}$ Mode

$\overline{CS}$ mode is selected if DIN is high at the CONVST rising edge. There are three different interface options available in this mode: 3-wire $\overline{CS}$ mode, and 4-wire $\overline{CS}$ mode. The following sections discuss these interface options in detail.

Copyright © 2013–2019, Texas Instruments Incorporated

Device Functional Modes (continued)

9.4.1.1 3-Wire $\overline{CS}$ Mode

This interface option is most useful when a single ADC is connected to an SPI-compatible digital host. In this interface option, DIN can be connected to DVDD and CONVST functions as $\overline{CS}$ (as shown in Figure 43). As shown in Figure 44, a CONVST rising edge forces DOUT to 3-state, samples the input signal, and causes the device to enter a conversion phase. Conversion is done with the internal clock and continues regardless of the state of CONVST. As a result, CONVST (functioning as $\overline{CS}$) can be pulled low after the start of the conversion to select other devices on the board. However, CONVST must return high before the minimum conversion time ($t_{conv\text{-}min}$) elapses and is held high until the maximum possible conversion time ($t_{conv\text{-}max}$) elapses.

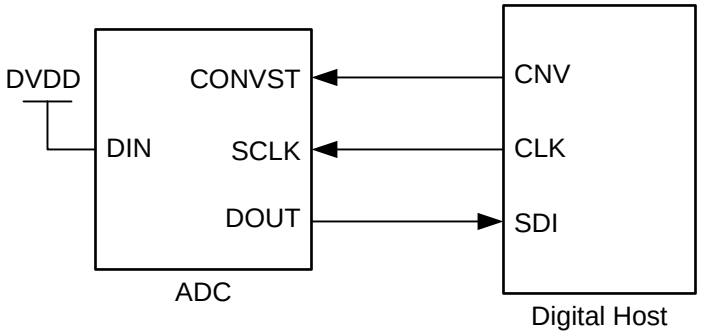

Figure 43. Connection Diagram: 3-Wire $\overline{CS}$ Mode (DIN = 1)

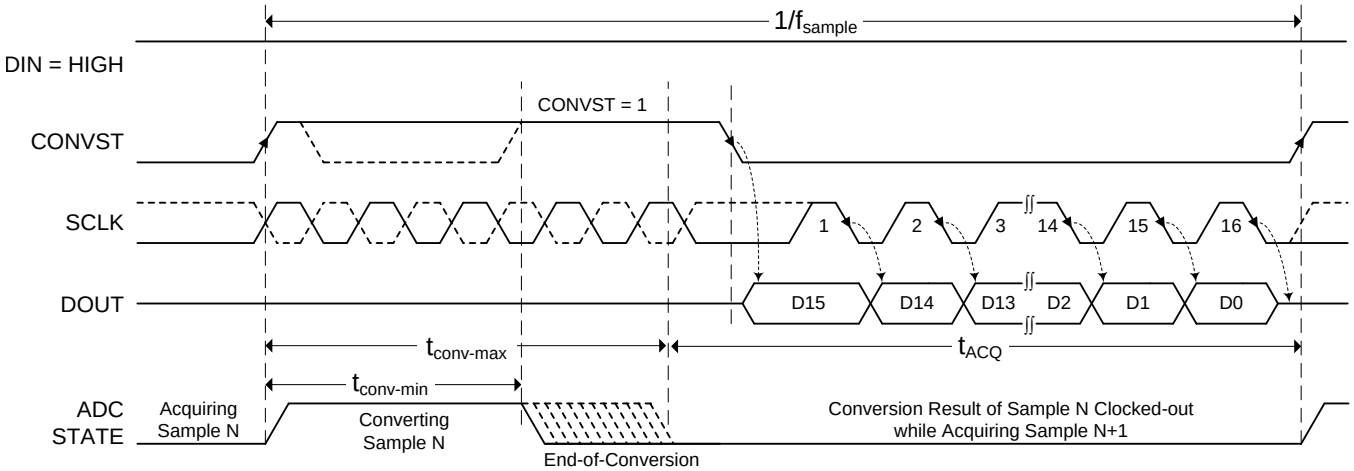

Figure 44. Interface Timing Diagram: 3-Wire $\overline{CS}$ Mode (DIN = 1)

When conversion is complete, the device enters an acquisition phase and powers down. CONVST (functioning as $\overline{CS}$) can be brought low after the maximum conversion time ($t_{conv\text{-}max}$) elapses. On the CONVST falling edge, DOUT comes out of 3-state and the device outputs the MSB of the data. The lower data bits are output on subsequent SCLK falling edges. Data can be read at either SCLK falling or rising edges. Note that with any SCLK frequency, reading data at SCLK falling edge requires the digital host to clock in the data during the $t_{h_CK_DO\text{-}min}$ time frame. DOUT goes to 3-state after the 16th SCLK falling edge or when CONVST goes high, whichever occurs first.

Device Functional Modes (continued)

9.4.1.2 4-Wire $\overline{CS}$ Mode

This interface option is useful when one or more ADCs are connected to an SPI-compatible digital host. Figure 45 shows the connection diagram for single ADC; see Figure 47 for the connection diagram for two ADCs.

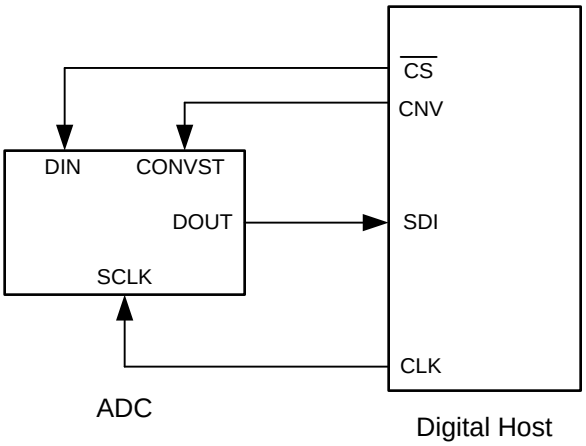

Figure 45. Connection Diagram: Single ADC With 4-Wire $\overline{CS}$ Mode

In this interface option, DIN is controlled by the digital host and functions as $\overline{CS}$. As shown in Figure 46, with DIN high, a CONVST rising edge selects $\overline{CS}$ mode, forces DOUT to 3-state, samples the input signal, and causes the device to enter a conversion phase. In this interface option, CONVST must be held at a high level from the start of the conversion until all data bits are read. Conversion is done with the internal clock and continues regardless of the state of DIN. As a result, DIN (functioning as $\overline{CS}$) can be pulled low to select other devices on the board. However, DIN must be pulled high before the minimum conversion time ($t_{conv\text{-}min}$) elapses and remains high until the maximum possible conversion time ($t_{conv\text{-}max}$) elapses.

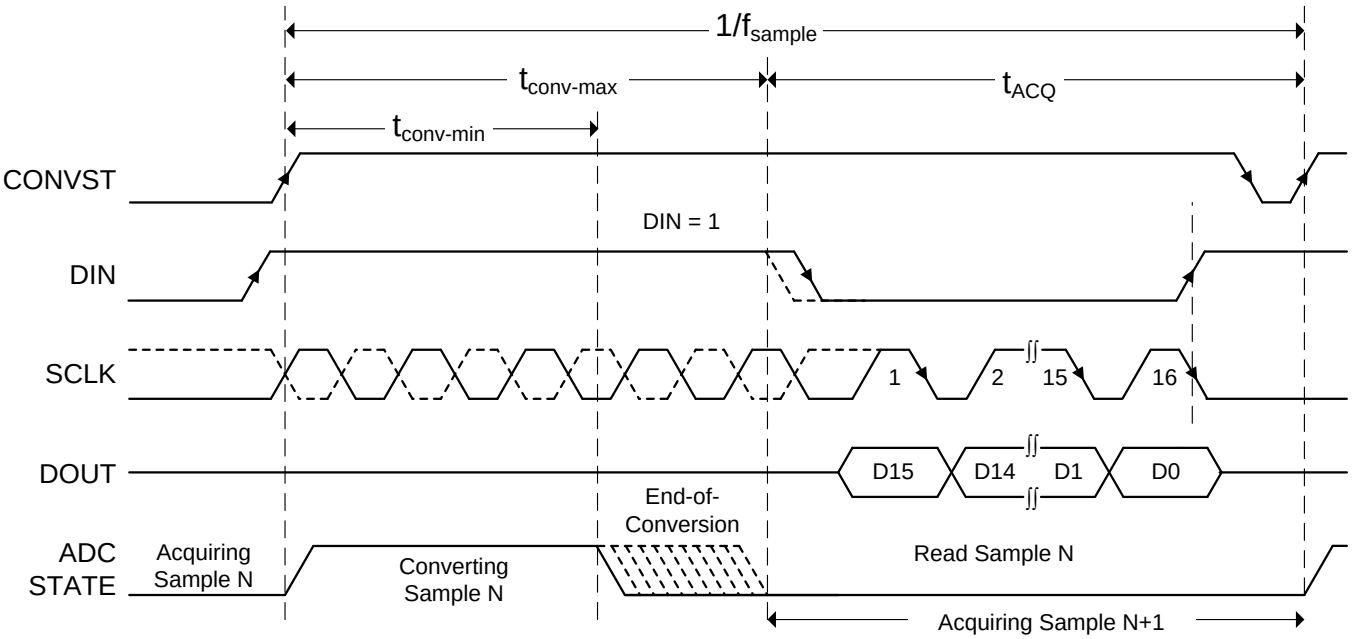

Figure 46. Interface Timing Diagram: Single ADC With 4-Wire $\overline{CS}$ Mode

Copyright © 2013–2019, Texas Instruments Incorporated

Device Functional Modes (continued)

When conversion is complete, the device enters acquisition phase and powers down. DIN (functioning as $\overline{CS}$) can be brought low after the maximum conversion time ($t_{conv-max}$) elapses. On the DIN falling edge, DOUT comes out of 3-state and the device outputs the MSB of the data. The lower data bits are output on subsequent SCLK falling edges. Data can be read at either SCLK falling or rising edges. Note that with any SCLK frequency, reading data at SCLK falling edge requires the digital host to clock in the data during the $t_{h_CK_DO-min}$ time frame. DOUT goes to 3-state after the 16th SCLK falling edge or when DIN goes high, whichever occurs first.

As shown in Figure 47, multiple devices can be hooked together on the same data bus. In this case, as shown in Figure 48, the DIN of the second device (functioning as $\overline{CS}$ for the second device) can go low after the first device data are read and the DOUT of the first device is in 3-state.

Care must be taken so that CONVST and DIN are not both low together at any time during the cycle.

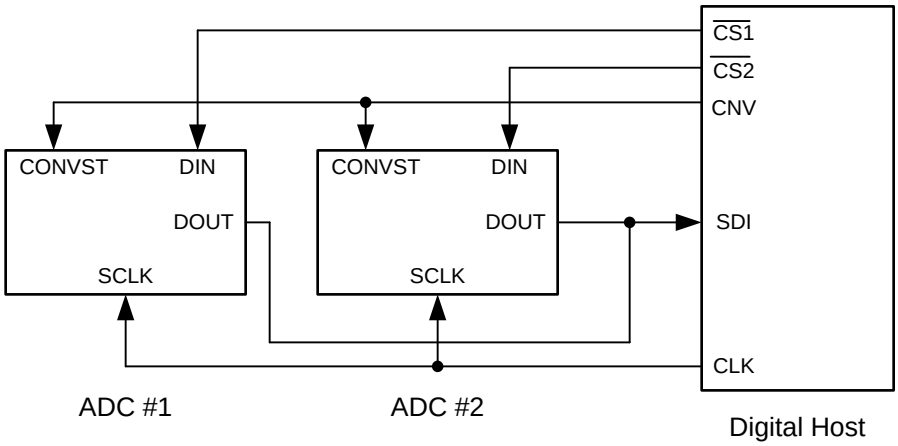

Figure 47. Connection Diagram: Two ADCs With 4-Wire $\overline{CS}$ Mode

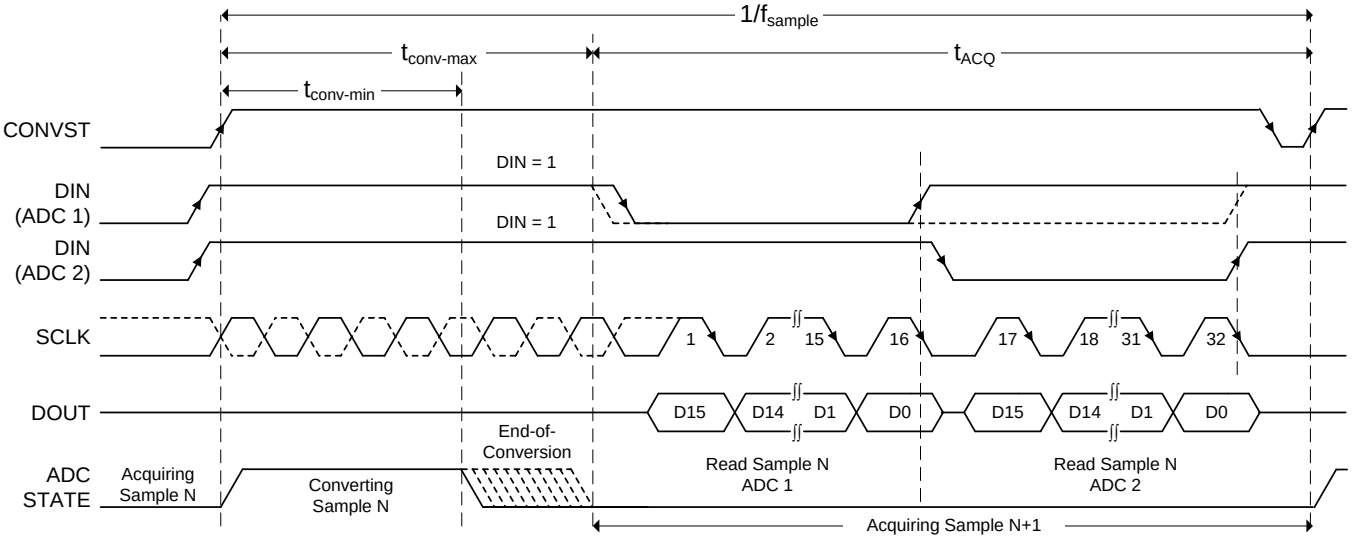

Figure 48. Interface Timing Diagram: Two ADCs With 4-Wire $\overline{CS}$ Mode

9.4.2 Daisy-Chain Mode

Daisy-chain mode is selected if DIN is low at the time of a CONVST rising edge or if DIN and CONVST are connected together. The following section discusses this interface option in detail.

Device Functional Modes (continued)

9.4.2.1 Daisy-Chain Mode

This interface option is most useful in applications where multiple ADC devices are used but the digital host has limited interfacing capability. Figure 49 shows a connection diagram with *N* ADCs connected in the daisy-chain. The CONVST pins of all ADCs in the chain are connected together and are controlled by a single pin of the digital host. Similarly, the SCLK pins of all ADCs in the chain are connected together and are controlled by a single pin of the digital host. The DIN pin for ADC 1 (DIN-1) is connected to GND. The DOUT pin of ADC 1 (DOUT-1) is connected to the DIN pin of ADC 2 (DIN-2), and so on. The DOUT pin of the last ADC in the chain (DOUT-N) is connected to the SDI pin of the digital host.

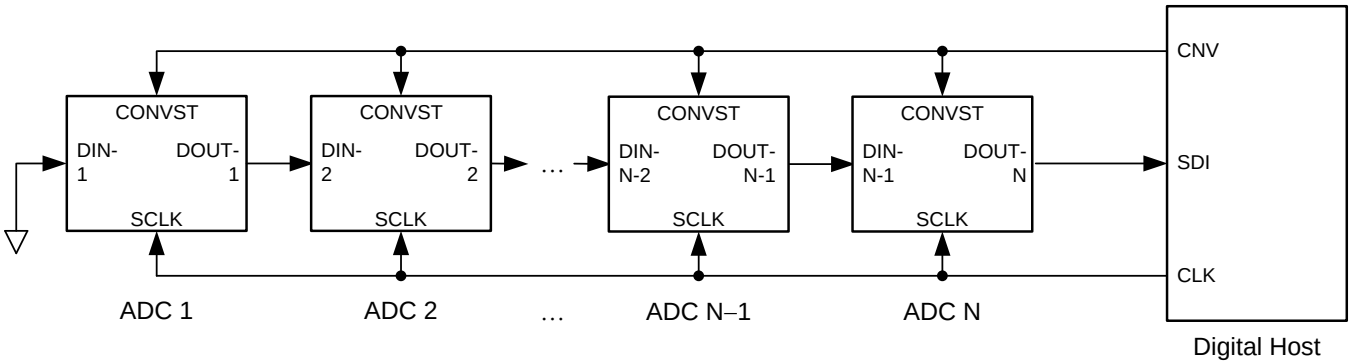

Figure 49. Connection Diagram: Daisy-Chain Mode (DIN = 0)

As shown in Figure 50, the device DOUT pin is driven low when DIN and CONVST are low together. With DIN low, a CONVST rising edge selects daisy-chain mode, samples the analog input, and causes the device to enter a conversion phase. In this interface option, CONVST must remain high from the start of the conversion until all data bits are read. When started, the conversion continues regardless of the state of SCLK, however SCLK must be low at the CONVST rising edge.

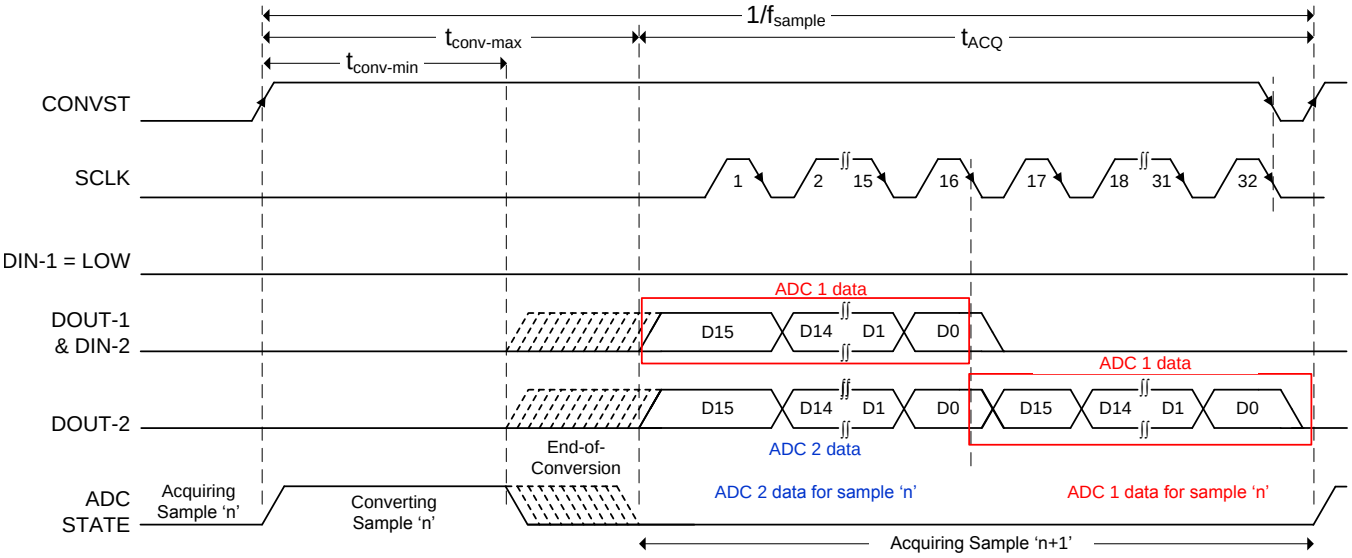

Figure 50. Interface Timing Diagram: For Two Devices in Daisy-Chain Mode

Copyright © 2013–2019, Texas Instruments Incorporated

Device Functional Modes (continued)

At the end of conversion, every ADC in the chain loads its own conversion result into the internal, 16-bit, shift register and also outputs the MSB bit of this conversion result on its own DOUT pin. All ADCs enter an acquisition phase and power-down. On every subsequent SCLK falling edge, the internal shift register of each ADC latches the data available on its DIN pin and shifts out the next bit of data on its DOUT pin. Therefore, the digital host receives the data of ADC N, followed by the data of ADC N–1, and so on (in MSB-first fashion). A total of 16 x *N* SCLK falling edges are required to capture the outputs of all *N* devices in the chain. Data can be read at either SCLK falling or rising edges. Note that with any SCLK frequency, reading data at SCLK falling edge requires the digital host to clock in the data during the $t_{h_CK_DO\text{-}min}$ time frame.

10 Application and Implementation

NOTE

Information in the following applications sections is not part of the TI component specification, and TI does not warrant its accuracy or completeness. TI's customers are responsible for determining suitability of components for their purposes. Customers should validate and test their design implementation to confirm system functionality.

10.1 Application Information

The two primary circuits required to maximize the performance of a high-precision, successive approximation register (SAR), analog-to-digital converter (ADC) are the input driver and the reference driver circuits. This section details some general principles for designing these circuits, followed by some application circuits designed using the ADS8866.

10.1.1 ADC Reference Driver

The external reference source to the ADS8866 must provide low-drift and very accurate voltage for the ADC reference input and support the dynamic charge requirements without affecting the noise and linearity performance of the device. The output broadband noise of most references can be in the order of a few hundred μV_{RMS}. Therefore, to prevent any degradation in the noise performance of the ADC, the output of the voltage reference must be appropriately filtered by using a low-pass filter with a cutoff frequency of a few hundred hertz.

After band-limiting the noise of the reference circuit, the next important step is to design a reference buffer that can drive the dynamic load posed by the reference input of the ADC. The reference buffer must regulate the voltage at the reference pin such that the value of V_{REF} stays within the 1-LSB error at the start of each conversion. This condition necessitates the use of a large capacitor, C_{BUF_FLT} (see Figure 41) for regulating the voltage at the reference input of the ADC. The amplifier selected to drive the reference pin must have an extremely low offset and temperature drift with a low output impedance to drive the capacitor at the ADC reference pin without any stability issues.

10.1.2 ADC Input Driver

The input driver circuit for a high-precision ADC mainly consists of two parts: a driving amplifier and a fly-wheel RC filter. The amplifier is used for signal conditioning of the input voltage and its low output impedance provides a buffer between the signal source and the switched capacitor inputs of the ADC. The RC filter helps attenuate the sampling charge injection from the switched-capacitor input stage of the ADC and functions as an antialiasing filter to band-limit the wideband noise contributed by the front-end circuit. Careful design of the front-end circuit is critical to meet the linearity and noise performance of a high-precision, 16-bit ADC such as the ADS8866.

10.1.2.1 Input Amplifier Selection

Selection criteria for the input amplifiers is highly dependent on the input signal type as well as the performance goals of the data acquisition system. Some key amplifier specifications to consider while selecting an appropriate amplifier to drive the inputs of the ADC are:

- *Small-signal bandwidth.* Select the small-signal bandwidth of the input amplifiers to be as high as possible after meeting the power budget of the system. Higher bandwidth reduces the closed-loop output impedance of the amplifier, thus allowing the amplifier to more easily drive the low cutoff frequency RC filter (see the *Antialiasing Filter* section) at the inputs of the ADC. Higher bandwidth also minimizes the harmonic distortion at higher input frequencies. In order to maintain the overall stability of the input driver circuit, select the amplifier bandwidth as described in Equation 1:

$$Unity - Gain\ Bandwidth \geq 4 \times \left(\frac{1}{2\pi \times (R_{FLT} + R_{FLT}) \times C_{FLT}} \right) \quad (1)$$

- *Noise.* Noise contribution of the front-end amplifiers must be as low as possible to prevent any degradation in SNR performance of the system. As a rule of thumb, to ensure that the noise performance of the data acquisition system is not limited by the front-end circuit, the total noise contribution from the front-end circuit must be kept below 20% of the input-referred noise of the ADC. Noise from the input driver circuit is band-limited by designing a low cutoff frequency RC filter, as explained in Equation 2.

Copyright © 2013–2019, Texas Instruments Incorporated

Application Information (continued)

$$N_G \times \sqrt{2} \times \sqrt{\left(\frac{V_{1/f_AMP_PP}}{6.6}\right)^2 + e_{n_RMS}^2 \times \frac{\pi}{2} \times f_{-3dB}} \leq \frac{1}{5} \times \frac{V_{REF}}{\sqrt{2}} \times 10^{-\left(\frac{SNR(dB)}{20}\right)}$$

where:

- V_{1/f_AMP_PP} is the peak-to-peak flicker noise in µV,
- e_{n_RMS} is the amplifier broadband noise density in nV/√Hz,
- f_{-3dB} is the 3-dB bandwidth of the RC filter, and
- N_G is the noise gain of the front-end circuit, which is equal to 1 in a buffer configuration. (2)

- *Distortion.* Both the ADC and the input driver introduce nonlinearity in a data acquisition block. As a rule of thumb, to ensure that the distortion performance of the data acquisition system is not limited by the front-end circuit, the distortion of the input driver must be at least 10 dB lower than the distortion of the ADC, as shown in Equation 3.

$$THD_{AMP} \leq THD_{ADC} - 10\,(dB) \quad (3)$$

- *Settling Time.* For dc signals with fast transients that are common in a multiplexed application, the input signal must settle within an 16-bit accuracy at the device inputs during the acquisition time window. This condition is critical to maintain the overall linearity performance of the ADC. Typically, the amplifier data sheets specify the output settling performance only up to 0.1% to 0.001%, which may not be sufficient for the desired 16-bit accuracy. Therefore, always verify the settling behavior of the input driver by TINA™-SPICE simulations before selecting the amplifier.

10.1.2.2 Charge-Kickback Filter

The charge-kickback filter is an RC filter at the input pins of the ADC that filters the broadband noise from the front-end drive circuitry and attenuates the sampling charge injection from the switched-capacitor input stage of the ADC. As shown in Figure 51, a filter capacitor (C_{FLT}) is connected from each input pin of the ADC to ground. This capacitor helps reduce the sampling charge injection and provides a charge bucket to quickly charge the internal sample-and-hold capacitors during the acquisition process. Generally, the value of this capacitor must be at least 20 times the specified value of the ADC sampling capacitance. For the ADS8866, the input sampling capacitance is equal to 59 pF; therefore, for optimal performance, keep C_{FLT} greater than 590 pF. This capacitor must be a COG- or NPO-type. The type of dielectric used in COG or NPO ceramic capacitors provides the most stable electrical properties over voltage, frequency, and temperature changes.

Driving capacitive loads can degrade the phase margin of the input amplifier, thus making the amplifier marginally unstable. To avoid amplifier stability issues, series isolation resistors (R_{FLT}) are used at the output of the amplifiers. A higher value of R_{FLT} helps with amplifier stability, but adds distortion as a result of interactions with the nonlinear input impedance of the ADC. Distortion increases with source impedance, input signal frequency, and input signal amplitude. Therefore, the selection of R_{FLT} requires balancing the stability of the driver amplifier and distortion performance of the design. Always verify the stability and settling behavior of the driving amplifier and charge-kickback filter by a TINA-TI™ SPICE simulation. Keep the tolerance of the selected resistors less than 1% to keep the inputs balanced.

$$f_{-3dB} = \frac{1}{2\pi \times (R_{FLT} + R_{FLT}) \times C_{FLT}}$$

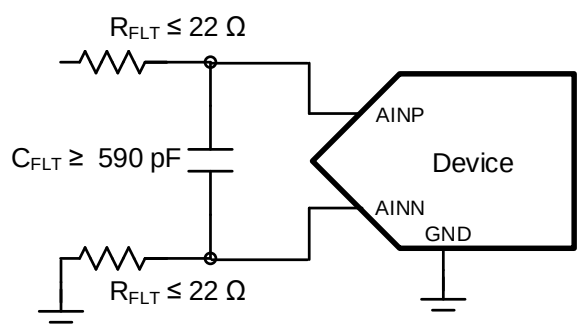

Figure 51. Charge-Kickback Filter

Application Information (continued)

This section describes some common application circuits using the ADS8866. These data acquisition (DAQ) blocks are optimized for specific input types and performance requirements of the system. For simplicity, power-supply decoupling capacitors are not shown in these circuit diagrams; see the *Power-Supply Decoupling* section for suggested guidelines.

10.2 Typical Applications

10.2.1 DAQ Circuit for a 10-µs, Full-Scale Step Response

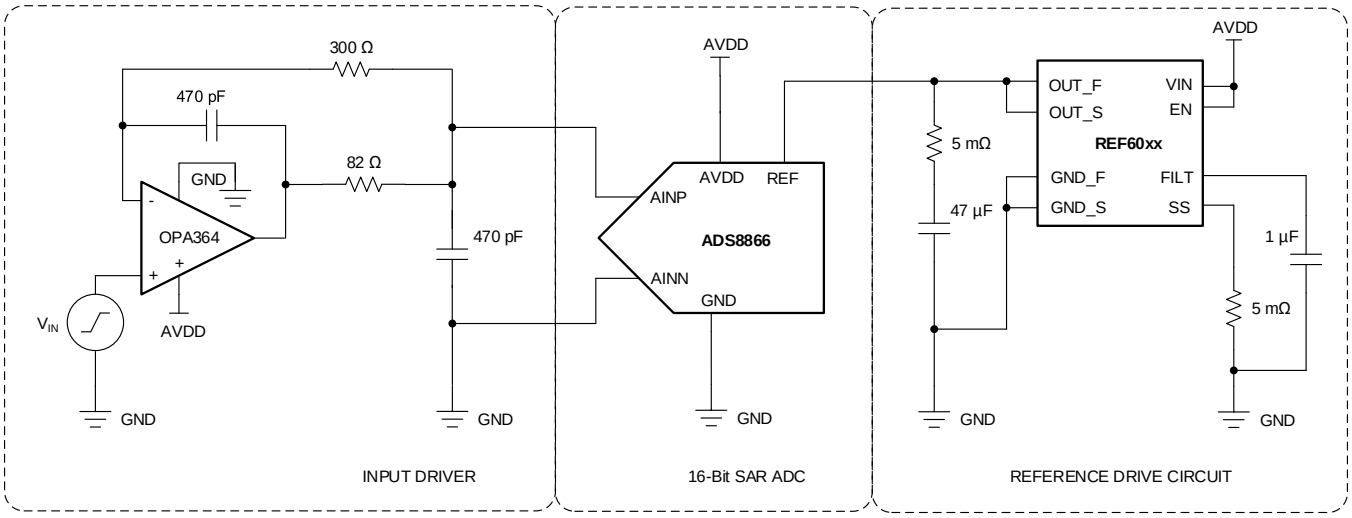

Figure 52. DAQ Circuit for a 10-µs, Full-Scale Step Response

10.2.1.1 Design Requirements

Step input signals are common in multiplexed applications when switching between different channels. In the worst-case scenario, one channel is at the negative full-scale (NFS) and the other channel is at the positive full-scale (PFS) voltage, in which case the step size is the full-scale range (FSR) of the ADC when the MUX channel is switched.

Design an application circuit optimized for using the ADS8866 to achieve

- Full-scale step input settling to 16-bit accuracy and
- INL of < ±2 LSB and
- Maximum specified throughput of 100 kSPS

10.2.1.2 Detailed Design Procedure

The application circuit is shown in Figure 52.

In such applications, the primary design requirement is to ensure that the full-scale step input signal settles to 16-bit accuracy at the ADC inputs. This condition is critical to achieve the excellent linearity specifications of the ADC. Therefore, the bandwidth of the charge-kickback RC filter must be large enough to allow optimal settling of the input signal during the ADC acquisition time. The filter capacitor helps reduce the sampling charge injection at the ADC inputs, but degrades the phase margin of the driving amplifier, thereby leading to stability issues. Amplifier stability is maintained by the series isolation resistor.

During the conversion process, binary-weighted capacitors are switched onto the REF pin. In order to support this dynamic load the output of the voltage reference must be buffered with a low-output impedance (high-bandwidth) buffer.

The REF60xx family of voltage references are able to maintain an output voltage within 1 LSB (16-bit) with minimal droop, even during the first conversion while driving the REF pin of the ADS8866. This feature is useful in burst-mode, event-triggered, equivalent-time sampling, and variable-sampling-rate data-acquisition systems.

Copyright © 2013–2019, Texas Instruments Incorporated

Typical Applications (continued)

For the input driving amplifiers, key specifications include rail-to-rail input and output swing, high bandwidth, high slew rate, and fast settling time. The CMOS amplifier meets all these specification requirements for this circuit with a single-supply and low quiescent current. The component values of the antialiasing filter are selected to meet the settling requirements of the system as well as to maintain the stability of the input driving amplifiers.

10.2.2 DAQ Circuit for Lowest Distortion and Noise Performance at 100 kSPS

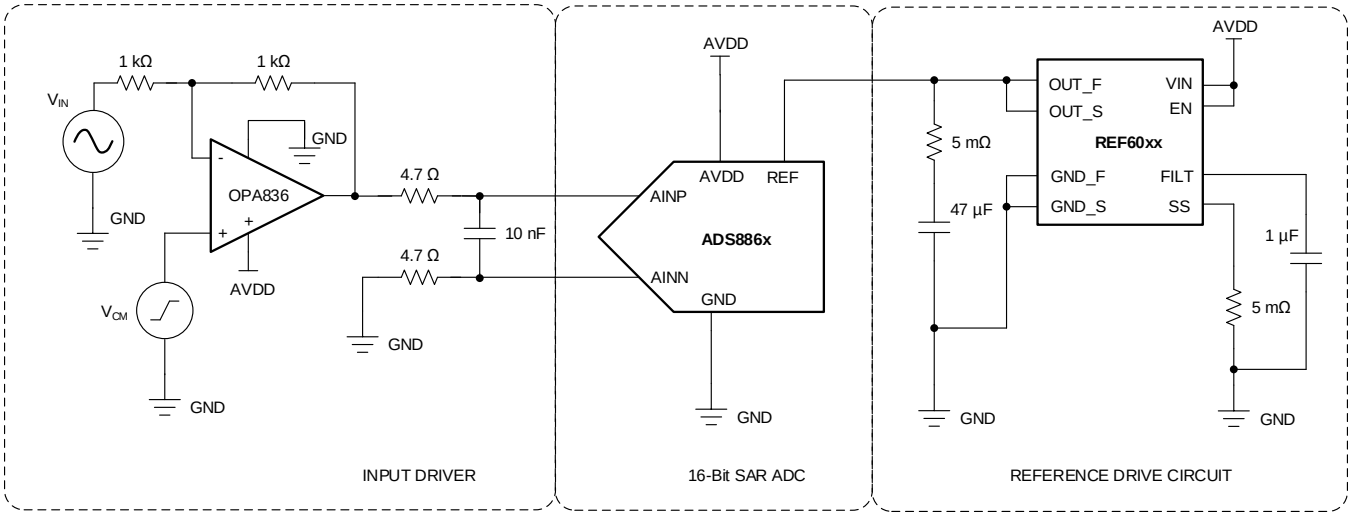

Figure 53. DAQ Circuit for Lowest Distortion and Noise at 100 kSPS

10.2.2.1 Design Requirements

Design an application circuit optimized for using the ADS8866 to achieve

- > 94.5-dB SNR, < –110-dB THD and
- ± 1-LSB linearity and
- maximum specified throughput of 100 kSPS

10.2.2.2 Detailed Design Procedure

This section describes an application circuit (as shown in Figure 53) optimized for using the ADS8866 with lowest distortion and noise performance at a throughput of 100 kSPS. The input signal is processed through a high-bandwidth, low-distortion amplifier in an inverting gain configuration and a low-pass RC filter before being fed into the ADC.

As a rule of thumb, the distortion from the input driver must be at least 10 dB less than the ADC distortion. The distortion resulting from variation in the common-mode signal is eliminated by using the amplifier in an inverting gain configuration that establishes a fixed common-mode level for the circuit. This configuration also eliminates the requirement of a rail-to-rail swing at the input of the amplifier. Therefore, the circuit uses the low-power OPA836 as an input driver, which provides exceptional ac performance because of its extremely low-distortion, high-bandwidth specifications.

In addition, the components of the charge-kickback filter are such that the noise from the front-end circuit is kept low without adding distortion to the input signal.

Typical Applications (continued)

10.2.3 Ultralow-Power DAQ Circuit at 10 kSPS

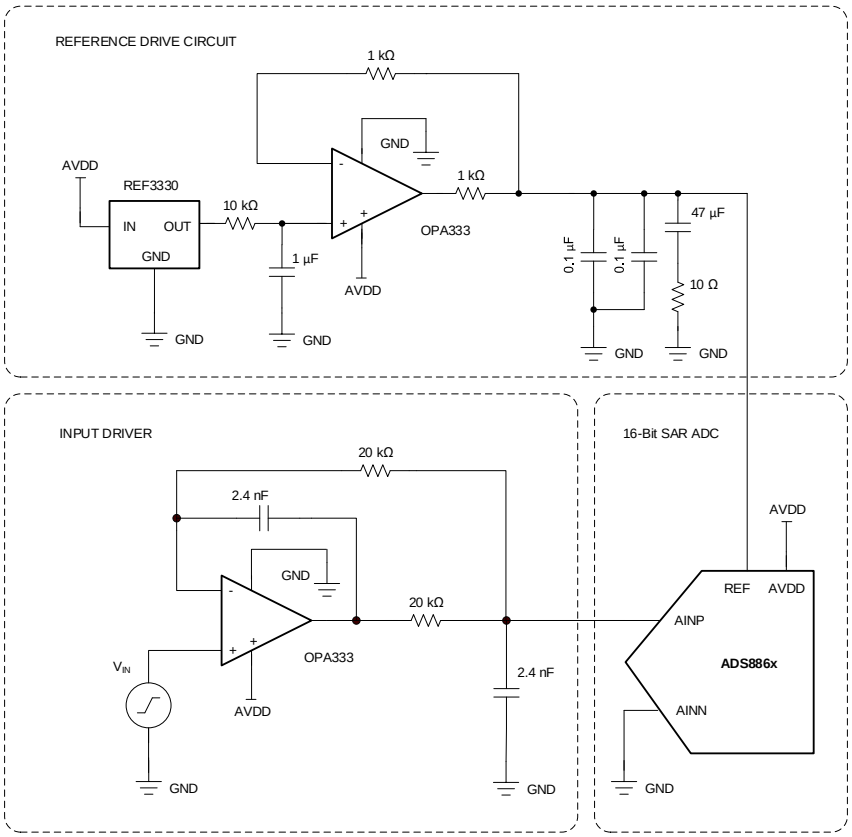

Figure 54. Ultralow-Power DAQ Circuit at 10 kSPS

10.2.3.1 Design Requirements

Portable and battery-powered applications require ultralow-power consumption and do not need very high throughput from the ADC.

Design a single-supply, data acquisition circuit optimized for using the ADS8866 to achieve

- ENOB > 14.5 bits and
- Ultralow-power consumption of < 1 mW at throughput of 10 kSPS

10.2.3.2 Detailed Design Procedure

The data acquisition circuit shown in Figure 54 is optimized for using the ADS8866 at a reduced throughput of 10 kSPS

In order to save power, this circuit is operated on a single 3.3-V supply. The circuit uses the OPA333 with a maximum quiescent current of 28 µA in order to drive the ADC input. The input amplifier is configured in a modified unity-gain buffer configuration. The filter capacitor at the ADC inputs attenuates the sampling charge injection noise from the ADC but effects the stability of the input amplifiers by degrading the phase margin. This attenuation requires a series isolation resistor to maintain amplifier stability. The value of the series resistor is directly proportional to the open-loop output impedance of the driving amplifier to maintain stability, which is high (in the order of kΩ) in the case of low-power amplifiers such as the OPA333. Therefore, a high value of 1 kΩ is selected for the series resistor at the ADC inputs. However, this series resistor creates an additional voltage drop in the signal path, thereby leading to linearity and distortion issues. The dual-feedback configuration used in Figure 54 corrects for this additional voltage drop and maintains system performance at ultralow-power consumption.

Copyright © 2013–2019, Texas Instruments Incorporated

11 Power Supply Recommendations

The device has two separate power supplies: AVDD and DVDD. The internal circuits of the device operate on AVDD; DVDD is used for the digital interface. AVDD and DVDD can be independently set to any value within the permissible range. During normal operation, if the voltage on the AVDD supply drops below the AVDD minimum specification, then TI recommends ramping the AVDD supply down to ≤ 0.7 V before power up. Also, during power-up, AVDD must monotonously rise to the desired operating voltage above the minimum AVDD specification.

11.1 Power-Supply Decoupling

Decouple the AVDD and DVDD pins with GND, using individual 1-µF decoupling capacitors placed in close proximity to the pin, as shown in Figure 55.

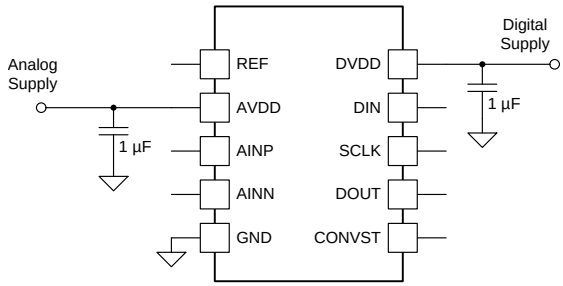

Figure 55. Supply Decoupling

11.2 Power Saving

The device has an auto power-down feature that powers down the internal circuitry at the end of every conversion. Referring to Figure 56, the input signal is acquired on the sampling capacitors when the device is in a power-down state (t_{acq}); at the same time, the result for the previous conversion is available for reading. The device powers up on the start of the next conversion. During conversion phase (t_{conv}), the device also consumes current from the reference source (connected to the REF pin).

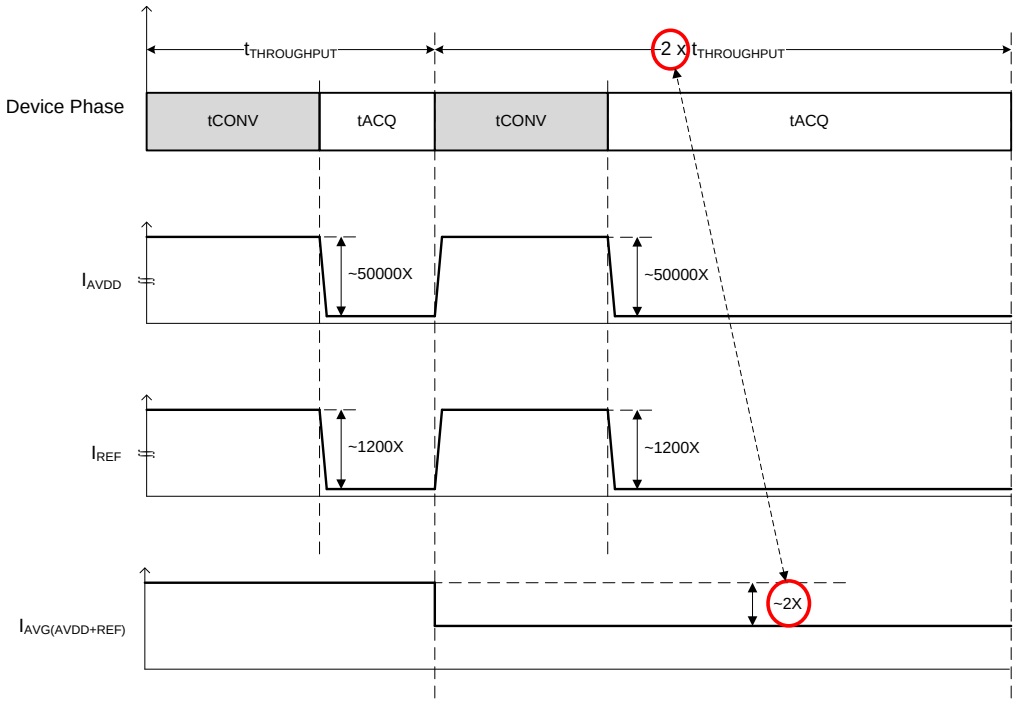

Figure 56. Power Scaling With Throughput

Power Saving (continued)

The conversion time, t_{conv}, is independent of the SCLK frequency. When operating the device at speeds lower than the maximum rated throughput, the conversion time, t_{conv}, does not change; the device spends more time in power-down state. Therefore, as shown in Figure 57, the device power consumption from the AVDD supply and the external reference source is directly proportional to the speed of operation. Extremely low AVDD power-down current (50 nA, typical) and extremely low external reference leakage current (250 nA, typical), make this device ideal for very low throughput applications (such as pulsed measurements).

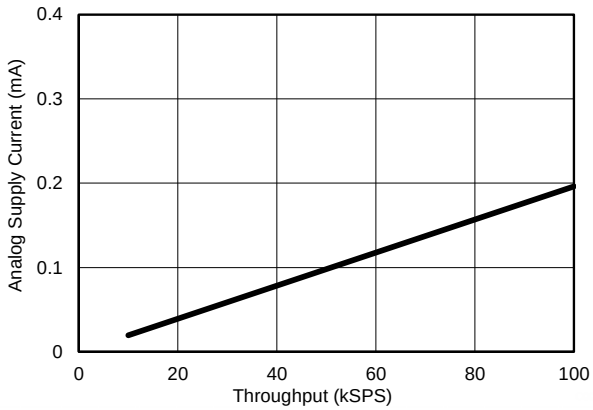

Figure 57. Power Scaling With Throughput

Copyright © 2013–2019, Texas Instruments Incorporated

12 Layout

12.1 Layout Guidelines

Figure 58 shows a board layout example for the device. Appropriate layout that interconnects accompanying capacitors and converters with low inductance is critical for achieving optimum performance. Thus, a PCB board with at least four layers is recommended to keep all critical components on the top layer and interconnected to a solid (low inductance) analog ground plane at the subsequent inner layer using 15-mil vias. Avoid crossing digital lines with the analog signal path and keep the analog input signals and the reference input signals away from noise sources. As shown in Figure 58, the analog input and reference signals are routed on the left side of the board and the digital connections are routed on the right side of the device.

As a result of dynamic currents during conversion and data transfer, each supply pin (AVDD and DVDD) must have a decoupling capacitor to keep the supply voltage stable. To maximize decoupling capabilities, inductance between each supply capacitor and the supply pin of the converter is kept less than 5 nH by placing the capacitor within 0.2-inches from the pin and connecting it with 20-mil traces and a 15-mil grounding via, as shown in Figure 58. TI recommends using one 1-µF ceramic capacitor at each supply pin. Avoid placing vias between the supply pin and its decoupling capacitor.

Dynamic currents are also present at the REF pin during the conversion phase and very good decoupling is critical to achieve optimum performance. The inductance between the reference capacitor and the REF pin is kept less than 2 nH by placing the capacitor within 0.1-inches from the pin and connecting it with 20-mil traces and multiple 15-mil grounding vias, as shown in Figure 58. A single, 10-µF, X7R-grade, 0805-size, ceramic capacitor with at least a 10-V rating is recommended for good performance over the rated temperature range. Avoid using additional lower value capacitors because the interactions between multiple capacitors may affect the ADC performance at higher sampling rates. A small, 0.1-Ω to 0.47-Ω, 0603-size resistor placed in series with the reference capacitor (as shown in Figure 58) keeps the overall impedance low and constant, especially at very high frequencies.

The fly-wheel RC filters are placed immediately next to the input pins. Among ceramic surface-mount capacitors, COG (NPO) ceramic capacitors provide the best capacitance precision. The type of dielectric used in COG (NPO) ceramic capacitors provides the most stable electrical properties over voltage, frequency, and temperature changes.

12.2 Layout Example

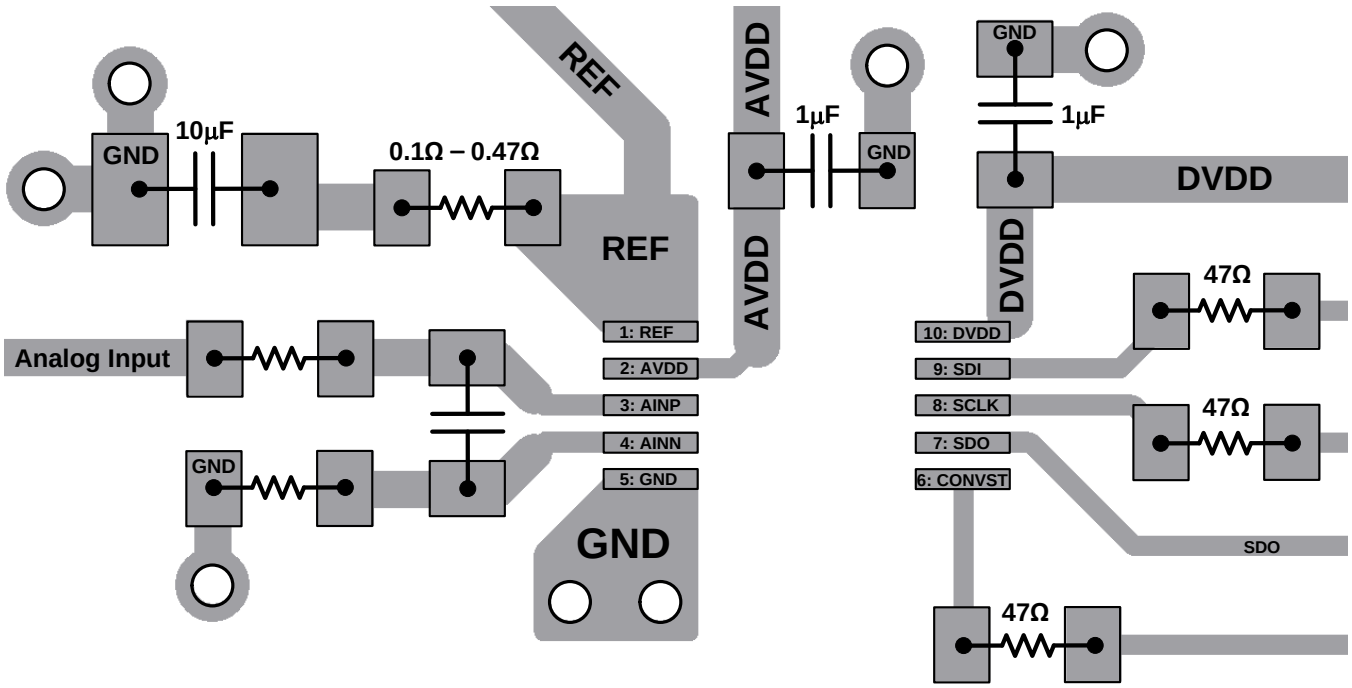

Figure 58. Recommended Layout

13 Device and Documentation Support

13.1 Documentation Support

13.1.1 Related Documentation

For related documentation see the following:

- Texas Instruments, *OPAx333 1.8-V, micropower, CMOS operational amplifiers, zero-drift series* data sheet
- Texas Instruments, *THS452x Very Low power, negative rail input, rail-to-rail output, fully differential amplifier* data sheet
- Texas Instruments, *THS4281 very low-power, high-speed, rail-to-rail input and output voltage-feedback operational amplifier* data sheet
- Texas Instruments, *1-MHz, micro-power, low-noise, RRIO,1.8-V CMOS operational amplifier precision value line series* data sheet
- Texas Instruments, *OPAx350 High-speed, single-supply, rail-to-rail operational amplifiers microamplifier series* data sheet
- Texas Instruments, *1.8V, 7MHz, 90dB CMRR, single-supply, rail-to-rail I/O operational amplifier* data sheet
- Texas Instruments, *18-bit data acquisition (DAQ) block optimized for 1-μs full-scale step response* reference guide
- Texas Instruments, *18-Bit, 1-MSPS data acquisition (DAQ) block optimized for lowest power* reference guide
- Texas Instruments, *18 bit, 10kSPS data acquisition (DAQ) block optimized for ultra low power < 1 mW* reference guide
- Texas Instruments, *18-Bit, 1MSPS data acquisition block (DAQ) optimized for lowest distortion and noise* reference guide
- Texas Instruments, *Ultra Low Power, 18 bit precision ECG data acquisition system* reference guide

13.2 Receiving Notification of Documentation Updates

To receive notification of documentation updates, navigate to the device product folder on ti.com. In the upper right corner, click on *Alert me* to register and receive a weekly digest of any product information that has changed. For change details, review the revision history included in any revised document.

13.3 Community Resources

The following links connect to TI community resources. Linked contents are provided "AS IS" by the respective contributors. They do not constitute TI specifications and do not necessarily reflect TI's views; see TI's Terms of Use.

TI E2E™ Online Community ***TI's Engineer-to-Engineer (E2E) Community.*** Created to foster collaboration among engineers. At e2e.ti.com, you can ask questions, share knowledge, explore ideas and help solve problems with fellow engineers.

Design Support ***TI's Design Support*** Quickly find helpful E2E forums along with design support tools and contact information for technical support.

13.4 Trademarks

TINA, TINA-TI, E2E are trademarks of Texas Instruments.
SPI is a trademark of Motorola Inc.
All other trademarks are the property of their respective owners.

13.5 Electrostatic Discharge Caution

This integrated circuit can be damaged by ESD. Texas Instruments recommends that all integrated circuits be handled with appropriate precautions. Failure to observe proper handling and installation procedures can cause damage.

ESD damage can range from subtle performance degradation to complete device failure. Precision integrated circuits may be more susceptible to damage because very small parametric changes could cause the device not to meet its published specifications.

Copyright © 2013–2019, Texas Instruments Incorporated

13.6 Glossary

SLYZ022 — *TI Glossary*.

This glossary lists and explains terms, acronyms, and definitions.

14 Mechanical, Packaging, and Orderable Information

The following pages include mechanical, packaging, and orderable information. This information is the most current data available for the designated devices. This data is subject to change without notice and revision of this document. For browser-based versions of this data sheet, refer to the left-hand navigation.

PACKAGING INFORMATION

Orderable part number	Status (1)	Material type (2)	Package | Pins	Package qty | Carrier	RoHS (3)	Lead finish/ Ball material (4)	MSL rating/ Peak reflow (5)	Op temp (°C)	Part marking (6)
ADS8866IDGS	Active	Production	VSSOP (DGS) | 10	80 | TUBE	Yes	NIPDAU	Level-2-260C-1 YEAR	-40 to 85	8866
ADS8866IDGS.A	Active	Production	VSSOP (DGS) | 10	80 | TUBE	Yes	NIPDAU	Level-2-260C-1 YEAR	-40 to 85	8866
ADS8866IDGS.B	Active	Production	VSSOP (DGS) | 10	80 | TUBE	Yes	NIPDAU	Level-2-260C-1 YEAR	-40 to 85	8866
ADS8866IDGSR	Active	Production	VSSOP (DGS) | 10	2500 | LARGE T&R	Yes	NIPDAU	Level-2-260C-1 YEAR	-40 to 85	8866
ADS8866IDGSR.B	Active	Production	VSSOP (DGS) | 10	2500 | LARGE T&R	Yes	NIPDAU	Level-2-260C-1 YEAR	-40 to 85	8866
ADS8866IDRCR	Active	Production	VSON (DRC) | 10	3000 | LARGE T&R	Yes	NIPDAU	Level-2-260C-1 YEAR	-40 to 85	8866
ADS8866IDRCR.B	Active	Production	VSON (DRC) | 10	3000 | LARGE T&R	Yes	NIPDAU	Level-2-260C-1 YEAR	-40 to 85	8866
ADS8866IDRCT	Active	Production	VSON (DRC) | 10	250 | SMALL T&R	Yes	NIPDAU	Level-2-260C-1 YEAR	-40 to 85	8866
ADS8866IDRCT.A	Active	Production	VSON (DRC) | 10	250 | SMALL T&R	Yes	NIPDAU	Level-2-260C-1 YEAR	-40 to 85	8866
ADS8866IDRCT.B	Active	Production	VSON (DRC) | 10	250 | SMALL T&R	Yes	NIPDAU	Level-2-260C-1 YEAR	-40 to 85	8866
ADS8866IDRCTG4	Active	Production	VSON (DRC) | 10	250 | SMALL T&R	Yes	NIPDAU	Level-2-260C-1 YEAR	-40 to 85	8866
ADS8866IDRCTG4.A	Active	Production	VSON (DRC) | 10	250 | SMALL T&R	Yes	NIPDAU	Level-2-260C-1 YEAR	-40 to 85	8866
ADS8866IDRCTG4.B	Active	Production	VSON (DRC) | 10	250 | SMALL T&R	Yes	NIPDAU	Level-2-260C-1 YEAR	-40 to 85	8866

(1) **Status:** For more details on status, see our product life cycle.

(2) **Material type:** When designated, preproduction parts are prototypes/experimental devices, and are not yet approved or released for full production. Testing and final process, including without limitation quality assurance, reliability performance testing, and/or process qualification, may not yet be complete, and this item is subject to further changes or possible discontinuation. If available for ordering, purchases will be subject to an additional waiver at checkout, and are intended for early internal evaluation purposes only. These items are sold without warranties of any kind.

(3) **RoHS values:** Yes, No, RoHS Exempt. See the TI RoHS Statement for additional information and value definition.

(4) **Lead finish/Ball material:** Parts may have multiple material finish options. Finish options are separated by a vertical ruled line. Lead finish/Ball material values may wrap to two lines if the finish value exceeds the maximum column width.

(5) **MSL rating/Peak reflow:** The moisture sensitivity level ratings and peak solder (reflow) temperatures. In the event that a part has multiple moisture sensitivity ratings, only the lowest level per JEDEC standards is shown. Refer to the shipping label for the actual reflow temperature that will be used to mount the part to the printed circuit board.

(6) **Part marking:** There may be an additional marking, which relates to the logo, the lot trace code information, or the environmental category of the part.

Multiple part markings will be inside parentheses. Only one part marking contained in parentheses and separated by a "~" will appear on a part. If a line is indented then it is a continuation of the previous line and the two combined represent the entire part marking for that device.

Important Information and Disclaimer: The information provided on this page represents TI's knowledge and belief as of the date that it is provided. TI bases its knowledge and belief on information provided by third parties, and makes no representation or warranty as to the accuracy of such information. Efforts are underway to better integrate information from third parties. TI has taken and continues to take reasonable steps to provide representative and accurate information but may not have conducted destructive testing or chemical analysis on incoming materials and chemicals. TI and TI suppliers consider certain information to be proprietary, and thus CAS numbers and other limited information may not be available for release.

In no event shall TI's liability arising out of such information exceed the total purchase price of the TI part(s) at issue in this document sold by TI to Customer on an annual basis.

TAPE AND REEL INFORMATION

REEL DIMENSIONS

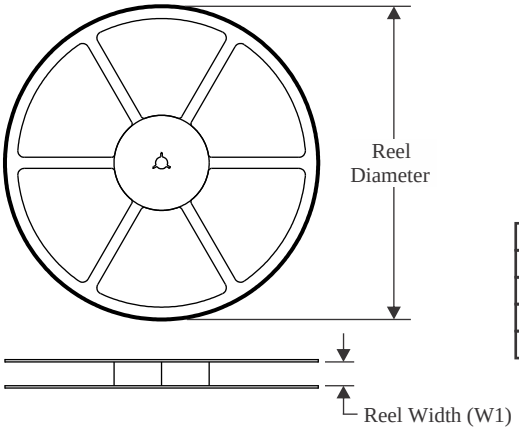

TAPE DIMENSIONS

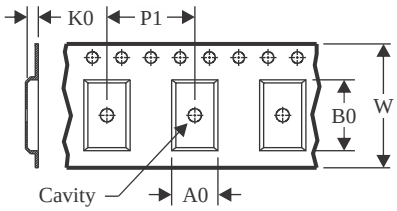

A0	Dimension designed to accommodate the component width
B0	Dimension designed to accommodate the component length
K0	Dimension designed to accommodate the component thickness
W	Overall width of the carrier tape
P1	Pitch between successive cavity centers

QUADRANT ASSIGNMENTS FOR PIN 1 ORIENTATION IN TAPE

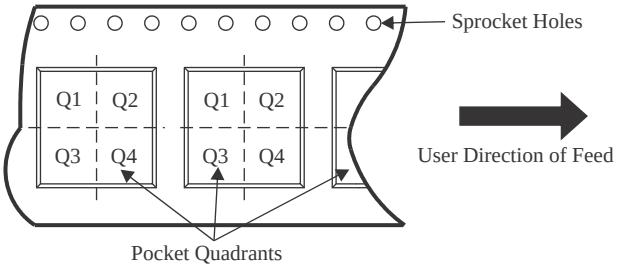

*All dimensions are nominal

Device	Package Type	Package Drawing	Pins	SPQ	Reel Diameter (mm)	Reel Width W1 (mm)	A0 (mm)	B0 (mm)	K0 (mm)	P1 (mm)	W (mm)	Pin1 Quadrant
ADS8866IDGSR	VSSOP	DGS	10	2500	330.0	12.4	5.3	3.4	1.4	8.0	12.0	Q1
ADS8866IDRCR	VSON	DRC	10	3000	330.0	12.4	3.3	3.3	1.1	8.0	12.0	Q2
ADS8866IDRCT	VSON	DRC	10	250	180.0	12.4	3.3	3.3	1.1	8.0	12.0	Q2
ADS8866IDRCTG4	VSON	DRC	10	250	180.0	12.4	3.3	3.3	1.1	8.0	12.0	Q2

TAPE AND REEL BOX DIMENSIONS

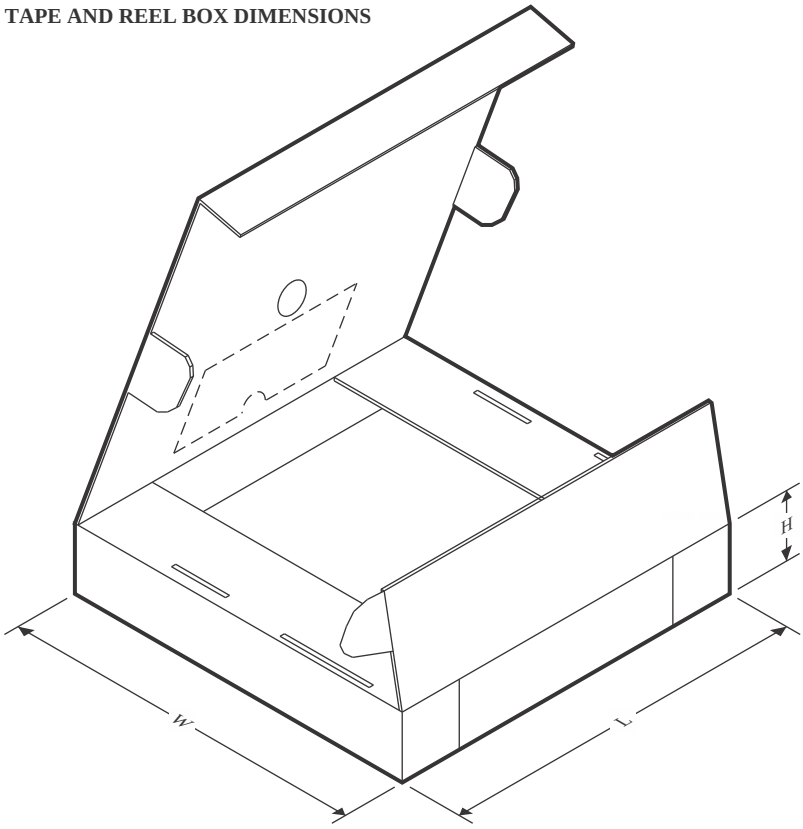

*All dimensions are nominal

Device	Package Type	Package Drawing	Pins	SPQ	Length (mm)	Width (mm)	Height (mm)
ADS8866IDGSR	VSSOP	DGS	10	2500	367.0	367.0	35.0
ADS8866IDRCR	VSON	DRC	10	3000	367.0	367.0	35.0
ADS8866IDRCT	VSON	DRC	10	250	213.0	191.0	35.0
ADS8866IDRCTG4	VSON	DRC	10	250	213.0	191.0	35.0

TUBE

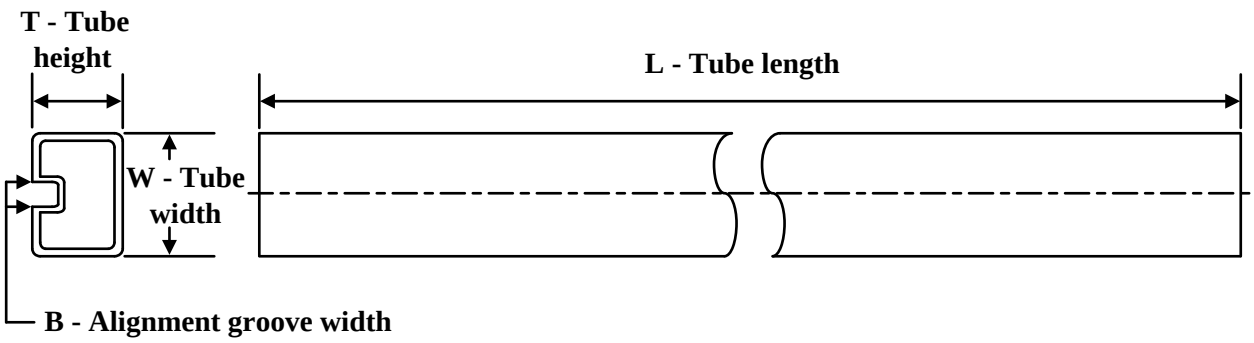

*All dimensions are nominal

Device	Package Name	Package Type	Pins	SPQ	L (mm)	W (mm)	T (µm)	B (mm)
ADS8866IDGS	DGS	VSSOP	10	80	330.2	6.6	3005	1.88
ADS8866IDGS.A	DGS	VSSOP	10	80	330.2	6.6	3005	1.88
ADS8866IDGS.B	DGS	VSSOP	10	80	330.2	6.6	3005	1.88

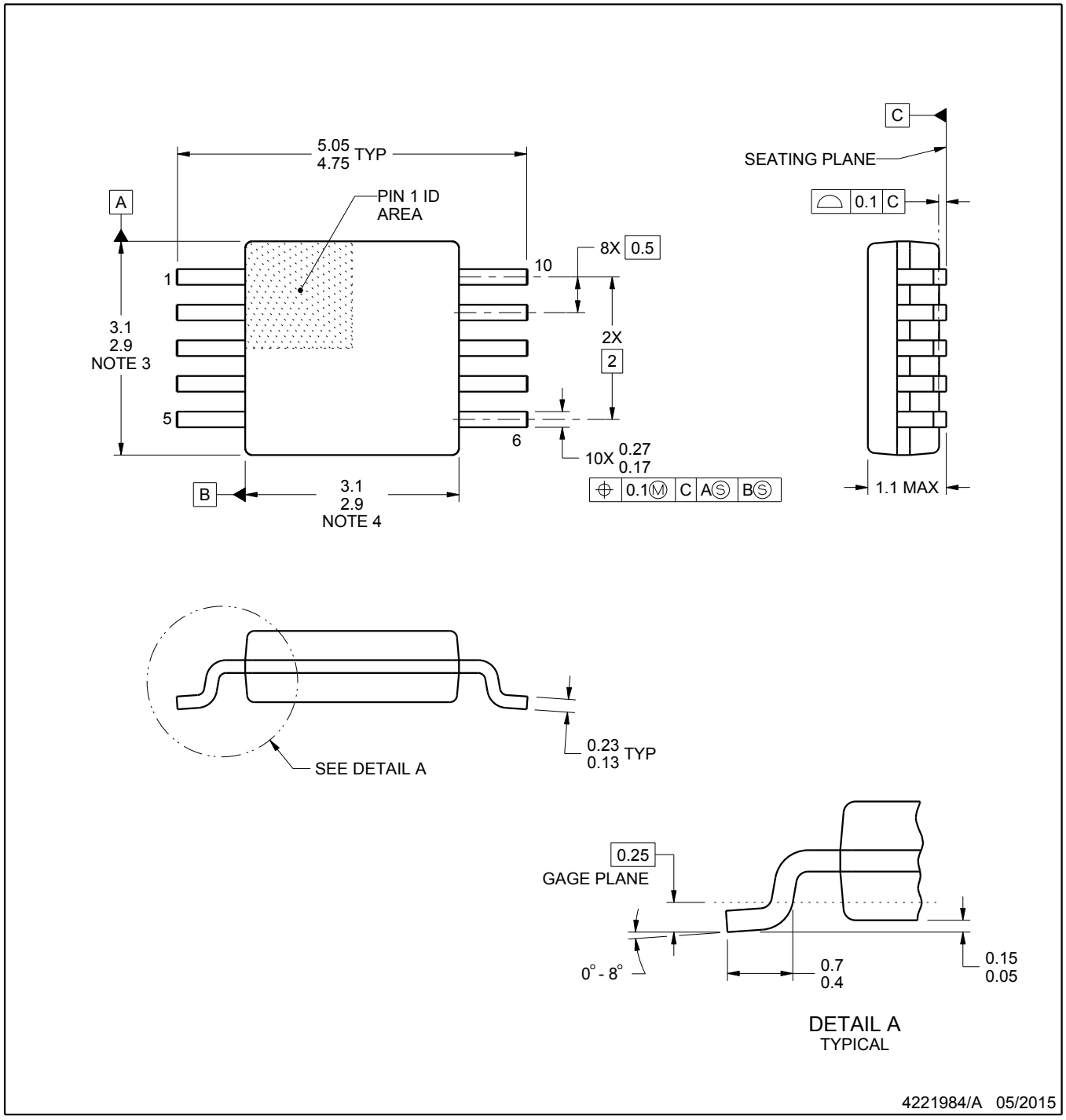

NOTES:

1. All linear dimensions are in millimeters. Any dimensions in parenthesis are for reference only. Dimensioning and tolerancing per ASME Y14.5M.
2. This drawing is subject to change without notice.
3. This dimension does not include mold flash, protrusions, or gate burrs. Mold flash, protrusions, or gate burrs shall not exceed 0.15 mm per side.
4. This dimension does not include interlead flash. Interlead flash shall not exceed 0.25 mm per side.
5. Reference JEDEC registration MO-187, variation BA.

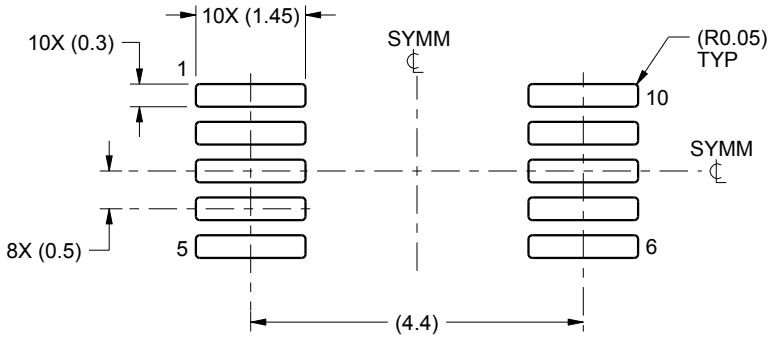

LAND PATTERN EXAMPLE
SCALE:10X

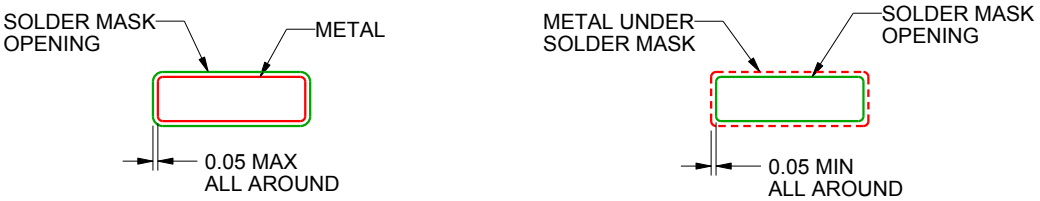

NON SOLDER MASK
DEFINED

SOLDER MASK
DEFINED

SOLDER MASK DETAILS
NOT TO SCALE

4221984/A 05/2015

NOTES: (continued)

6. Publication IPC-7351 may have alternate designs.
7. Solder mask tolerances between and around signal pads can vary based on board fabrication site.

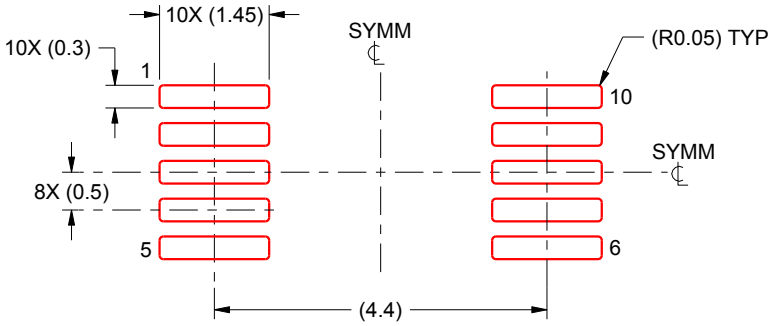

SOLDER PASTE EXAMPLE
BASED ON 0.125 mm THICK STENCIL
SCALE:10X

4221984/A 05/2015

NOTES: (continued)

8. Laser cutting apertures with trapezoidal walls and rounded corners may offer better paste release. IPC-7525 may have alternate design recommendations.
9. Board assembly site may have different recommendations for stencil design.

GENERIC PACKAGE VIEW

DRC 10

VSON - 1 mm max height

3 x 3, 0.5 mm pitch

PLASTIC SMALL OUTLINE - NO LEAD

This image is a representation of the package family, actual package may vary.
Refer to the product data sheet for package details.

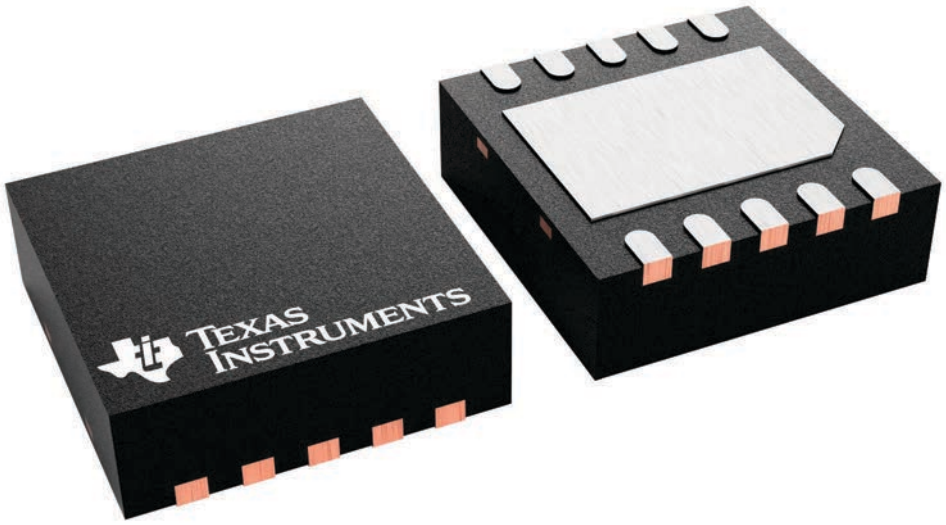

4226193/A

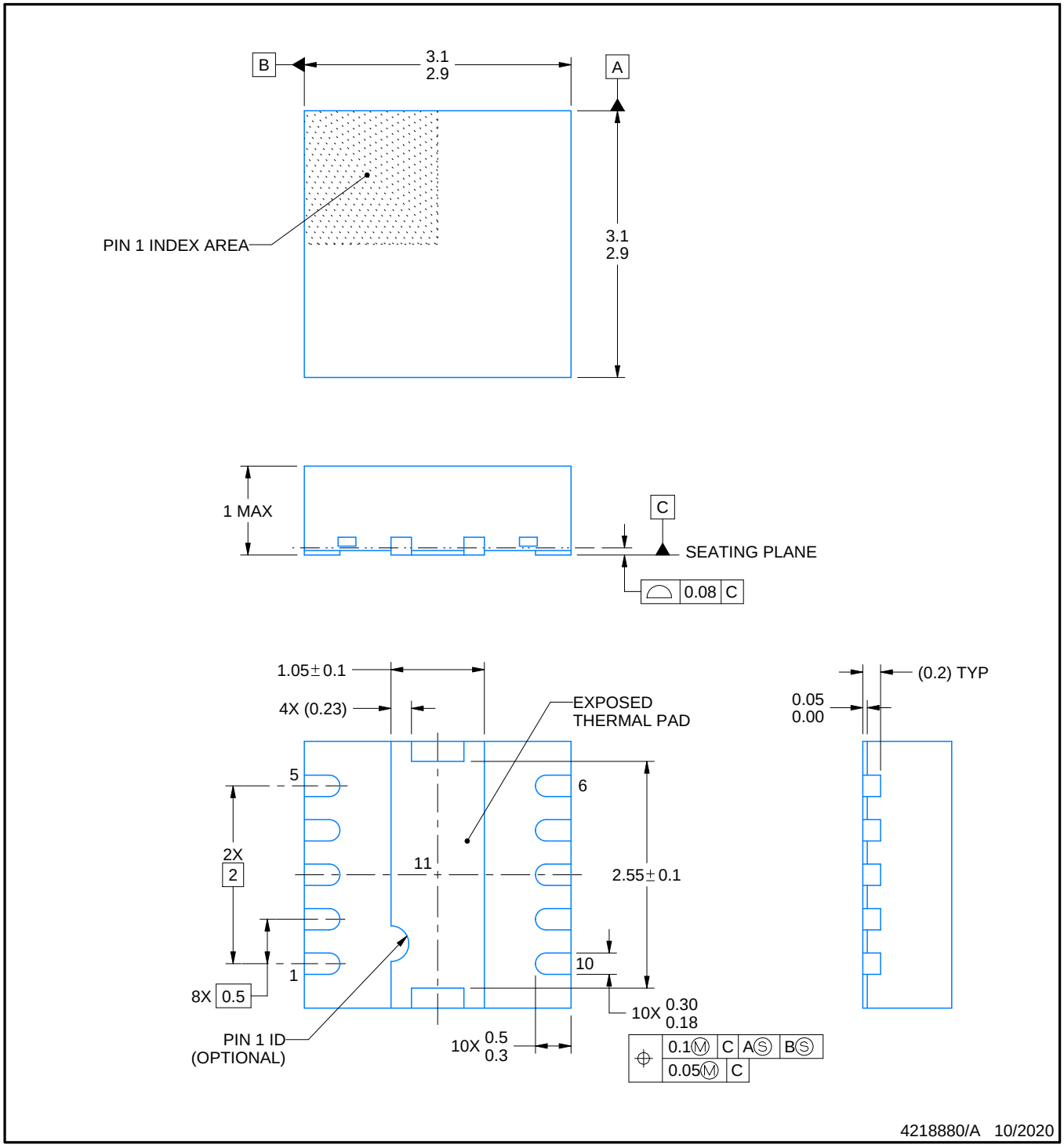

NOTES:

1. All linear dimensions are in millimeters. Any dimensions in parenthesis are for reference only. Dimensioning and tolerancing per ASME Y14.5M.
2. This drawing is subject to change without notice.
3. The package thermal pad must be soldered to the printed circuit board for thermal and mechanical performance.

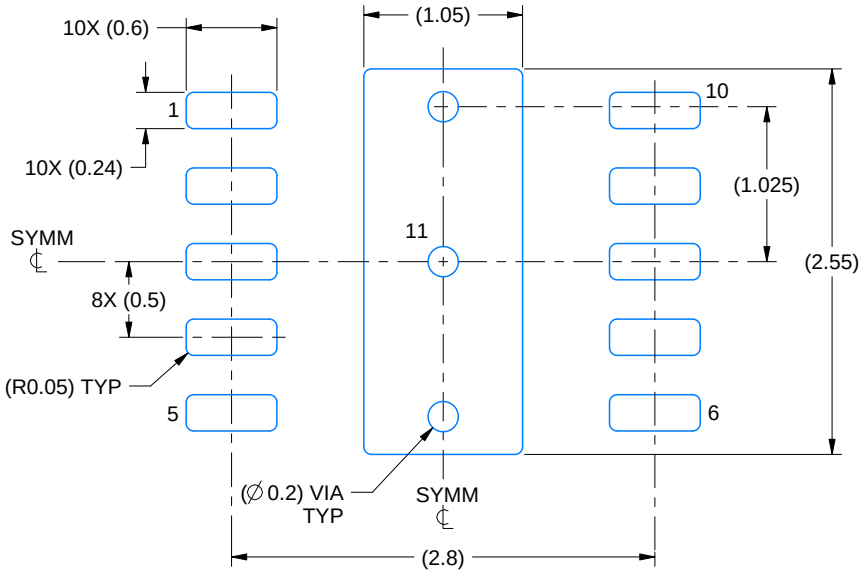

LAND PATTERN EXAMPLE
SCALE:20X

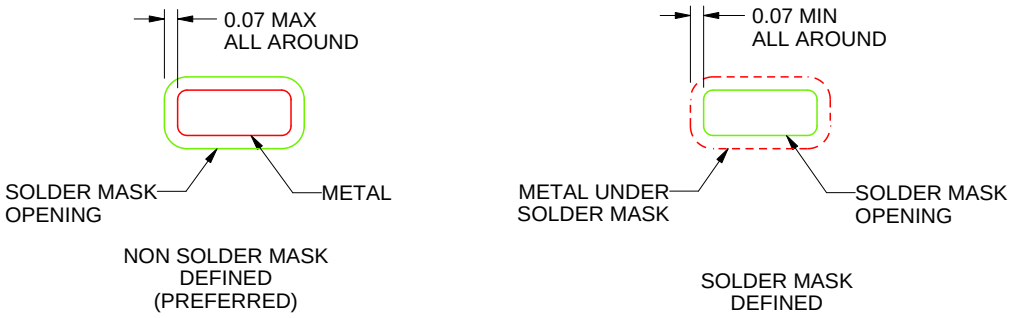

SOLDER MASK DETAILS

4218880/A 10/2020

NOTES: (continued)

4. This package is designed to be soldered to a thermal pad on the board. For more information, see Texas Instruments literature number SLUA271 (www.ti.com/lit/slua271).
5. Vias are optional depending on application, refer to device data sheet. If some or all are implemented, recommended via locations are shown.

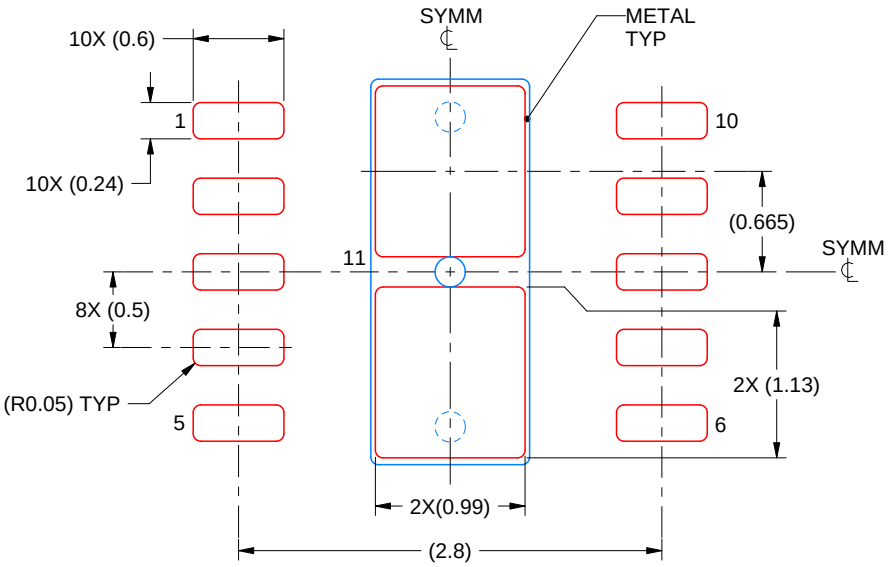

SOLDER PASTE EXAMPLE
BASED ON 0.125 mm THICK STENCIL

EXPOSED PAD 11:
84% PRINTED SOLDER COVERAGE BY AREA UNDER PACKAGE
SCALE:20X

4218880/A 10/2020

NOTES: (continued)

6. Laser cutting apertures with trapezoidal walls and rounded corners may offer better paste release. IPC-7525 may have alternate design recommendations.

IMPORTANT NOTICE AND DISCLAIMER

TI PROVIDES TECHNICAL AND RELIABILITY DATA (INCLUDING DATA SHEETS), DESIGN RESOURCES (INCLUDING REFERENCE DESIGNS), APPLICATION OR OTHER DESIGN ADVICE, WEB TOOLS, SAFETY INFORMATION, AND OTHER RESOURCES “AS IS” AND WITH ALL FAULTS, AND DISCLAIMS ALL WARRANTIES, EXPRESS AND IMPLIED, INCLUDING WITHOUT LIMITATION ANY IMPLIED WARRANTIES OF MERCHANTABILITY, FITNESS FOR A PARTICULAR PURPOSE OR NON-INFRINGEMENT OF THIRD PARTY INTELLECTUAL PROPERTY RIGHTS.

These resources are intended for skilled developers designing with TI products. You are solely responsible for (1) selecting the appropriate TI products for your application, (2) designing, validating and testing your application, and (3) ensuring your application meets applicable standards, and any other safety, security, regulatory or other requirements.

These resources are subject to change without notice. TI grants you permission to use these resources only for development of an application that uses the TI products described in the resource. Other reproduction and display of these resources is prohibited. No license is granted to any other TI intellectual property right or to any third party intellectual property right. TI disclaims responsibility for, and you will fully indemnify TI and its representatives against, any claims, damages, costs, losses, and liabilities arising out of your use of these resources.

TI’s products are provided subject to TI’s Terms of Sale or other applicable terms available either on ti.com or provided in conjunction with such TI products. TI’s provision of these resources does not expand or otherwise alter TI’s applicable warranties or warranty disclaimers for TI products.

TI objects to and rejects any additional or different terms you may have proposed.

Mailing Address: Texas Instruments, Post Office Box 655303, Dallas, Texas 75265
Copyright © 2025, Texas Instruments Incorporated