# ADSxx54 Dual, High-Speed, 16-, 14-, and 12-Bit, Simultaneous-Sampling, Analog-to-Digital Converters

## 1 Features

- 16-, 14-, and 12-Bit, Pin-Compatible Family
- Simultaneous Sampling of Two Channels
- Supports Fully-Differential Inputs
- High Speed:
  - ADS8354: 16 Bits, 700 kSPS
  - ADS7854: 14 Bits, 1 MSPS
  - ADS7254: 12 Bits, 1 MSPS
- Excellent DC Performance:
  - ADS8354:
    - 16-Bit NMC DNL, ±2.5-LSB Max INL
  - ADS7854:
    - 14-Bit NMC DNL, ±1.5-LSB Max INL
  - ADS7254:
    - 12-Bit NMC DNL, ±1-LSB Max INL
- Excellent AC Performance:
  - ADS8354:
    - 93-dB SNR, –100-dB THD
  - ADS7854:
    - 88-dB SNR, –95-dB THD
  - ADS7254:
    - 72-dB SNR, –90-dB THD
- Dual, Programmable, and Buffered 2.5-V Internal Reference
- Fully-Specified Over the Extended Industrial Temperature Range: –40°C to 125°C
- Small Footprint: WQFN-16 (3-mm × 3-mm) and TSSOP-16

## 2 Applications

- Motor Control: Position Measurement Using Encoders
- Optical Networking: EDFA Gain Control Loops
- Protection Relays
- Power Quality Measurement
- Three-Phase Power Controls
- Programmable Logic Controllers

## 3 Description

The ADS8354, ADS7854, and ADS7254 belong to a family of pin-compatible, dual, high-speed, simultaneous-sampling, analog-to-digital converters (ADCs) that support fully-differential analog inputs.

Each device includes two individually programmable reference sources that can be used for system-level gain calibration. Also, a flexible serial interface that can operate over a wide power-supply range enables easy communication with a large variety of host controllers. Power consumption for a given throughput can be optimized by using the two low-power modes supported by the device. All devices are fully specified over the extended industrial temperature range (–40°C to 125°C) and are available in pin-compatible, WQFN-16 (3-mm × 3-mm) and TSSOP-16 packages.

**Device Information(1)**

| PART NUMBER | PACKAGE | BODY SIZE (NOM) |
|---|---|---|
| ADSxx54 | TSSOP (16) | 5.00 mm × 4.40 mm |
| | WQFN (16) | 3.00 mm × 3.00 mm |

(1) For all available packages, see the orderable addendum at the end of the datasheet.

**Typical Application Diagram**

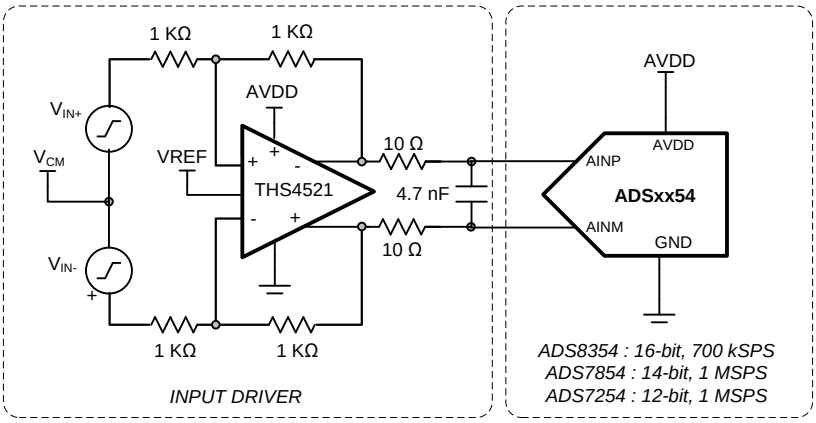


An IMPORTANT NOTICE at the end of this data sheet addresses availability, warranty, changes, use in safety-critical applications, intellectual property matters and other important disclaimers. PRODUCTION DATA.

## Table of Contents

**1 Features** ... 1
**2 Applications** ... 1
**3 Description** ... 1
**4 Revision History** ... 2
**5 Device Comparison Table** ... 3
**6 Pin Configurations and Functions** ... 4
**7 Specifications** ... 5
7.1 Absolute Maximum Ratings ... 5
7.2 Handling Ratings ... 5
7.3 Recommended Operating Conditions ... 5
7.4 Thermal Information ... 5
7.5 Electrical Characteristics: ADS8354 ... 6
7.6 Electrical Characteristics: ADS7854 ... 7
7.7 Electrical Characteristics: ADS7254 ... 8
7.8 Electrical Characteristics: All Devices ... 9
7.9 Timing Requirements: Interface Mode ... 11
7.10 Timing Characteristics: Serial Interface ... 11
7.11 Typical Characteristics: ADS8354 ... 13
7.12 Typical Characteristics: ADS7854 ... 17
7.13 Typical Characteristics: ADS7254 ... 22
7.14 Typical Characteristics: Common to ADS8354, ADS7854, and ADS7254 ... 27
**8 Detailed Description** ... 28
8.1 Overview ... 28
8.2 Functional Block Diagram ... 28
8.3 Feature Description ... 29
8.4 Device Functional Modes ... 33
8.5 Register Maps and Serial Interface ... 33
**9 Application and Implementation** ... 47
9.1 Application Information ... 47
9.2 Typical Applications ... 49
**10 Power-Supply Recommendations** ... 57
**11 Layout** ... 58
11.1 Layout Guidelines ... 58
11.2 Layout Example ... 58
**12 Device and Documentation Support** ... 59
12.1 Related Links ... 59
12.2 Related Documentation ... 59
12.3 Trademarks ... 59
12.4 Electrostatic Discharge Caution ... 59
12.5 Glossary ... 59
**13 Mechanical, Packaging, and Orderable Information** ... 59

## 4 Revision History

| Changes from Revision A (July 2014) to Revision B | Page |
|---|---|
| • Made changes to the ADS8354 preview device and moved to Production Data status | 1 |
| • Changed document status from Mixed Status to Production Data | 1 |
| • Corrected cross-reference for Figure 98 | 46 |

| Changes from Original (October 2013) to Revision A | Page |
|---|---|
| • Made changes to product preview data sheet | 1 |


Copyright © 2013–2014, Texas Instruments Incorporated

# 5 Device Comparison Table

| PRODUCT | RESOLUTION (Bits) | INPUT CONFIGURATION | NMC (Bits) | INL (LSB) | SNR (dB) |
|---|---|---|---|---|---|
| ADS8354 | 16 | Fully-differential | 16 | ±2.5 | 93 (typ) |
| ADS7854 | 14 | Fully-differential | 14 | ±1.5 | 88 (typ) |
| ADS7254 | 12 | Fully-differential | 12 | ±1 | 74 (typ) |
| ADS8353 | 16 | Single-ended and pseudo-differential | 16 | ±2.5 | 89 (typ) |
| ADS7853 | 14 | Single-ended and pseudo-differential | 14 | ±2 | 84 (typ) |
| ADS7253 | 12 | Single-ended and pseudo-differential | 12 | ±1 | 73.5 (typ) |

Copyright © 2013–2014, Texas Instruments Incorporated

# 6 Pin Configurations and Functions

**RTE Package**
**WQFN-16**
**(Top View)**

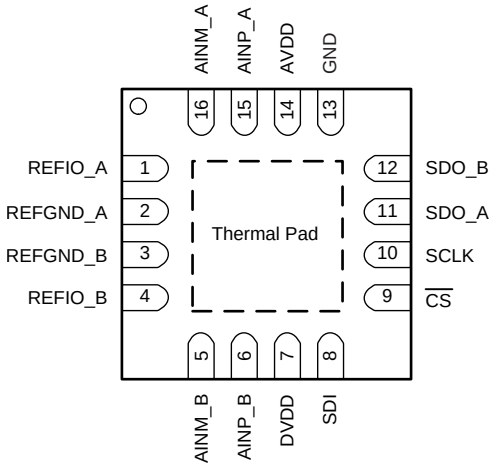


**PW Package**
**TSSOP-16**
**(Top View)**

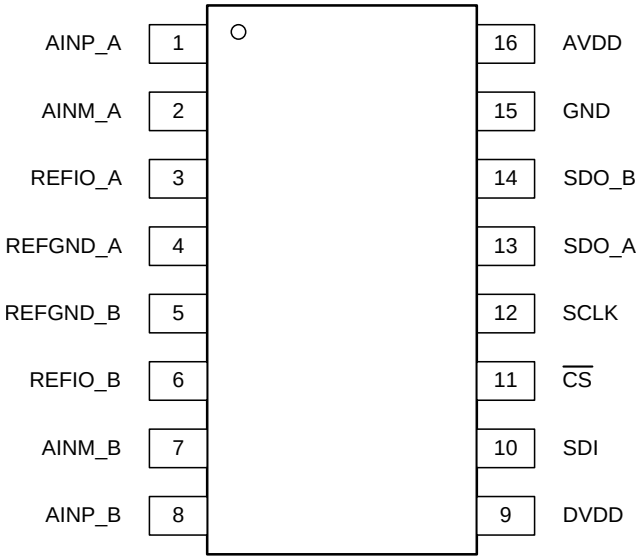


**Pin Functions**

| PIN | | | I/O | DESCRIPTION |
|---|---|---|---|---|
| | NO. | | | |
| NAME | TSSOP | WQFN | | |
| AINM_A | 2 | 16 | Analog input | Negative analog input, channel A |
| AINM_B | 7 | 5 | Analog input | Negative analog input, channel B |
| AINP_A | 1 | 15 | Analog input | Positive analog input, channel A |
| AINP_B | 8 | 6 | Analog input | Positive analog input, channel B |
| AVDD | 16 | 14 | Supply | Supply voltage for ADC operation |
| $\overline{CS}$ | 11 | 9 | Digital input | Chip-select signal; active low |
| DVDD | 9 | 7 | Digital I/O supply | Digital I/O supply |
| GND | 15 | 13 | Supply | Digital ground |
| REFGND_A | 4 | 2 | Supply | Reference ground potential A |
| REFGND_B | 5 | 3 | Supply | Reference ground potential B |
| REFIO_A | 3 | 1 | Analog input/output | Reference voltage input/output, channel A |
| REFIO_B | 6 | 4 | Analog input/output | Reference voltage input/output, channel B |
| SCLK | 12 | 10 | Digital input | Clock for serial communication |
| SDI | 10 | 8 | Digital input | Data input for serial communication |
| SDO_A | 13 | 11 | Digital output | Data output for serial communication, channel A and channel B |
| SDO_B | 14 | 12 | Digital output | Data output for serial communication, channel B |
| Thermal pad | — | Thermal pad | Supply | Exposed thermal pad (only for WQFN). TI recommends connecting this pin to the printed circuit board (PCB) ground. |


Copyright © 2013–2014, Texas Instruments Incorporated

# 7 Specifications

## 7.1 Absolute Maximum Ratings[1]

over operating free-air temperature range (unless otherwise noted)

| | MIN | MAX | UNIT |
|---|---|---|---|
| AVDD to REFGND_x or DVDD to GND | –0.3 | 6 | V |
| Analog (AINP_x and AINM_x) and reference input (REFIO_x) voltage with respect to REFGND_x | REFGND_x – 0.3 | AVDD + 0.3 | V |
| Digital input voltage with respect to GND | GND – 0.3 | DVDD + 0.3 | V |
| Ground voltage difference \|REFGND_x-GND\| | | 0.3 | V |
| Input current to any pin except supply pins | | ±10 | mA |
| Maximum virtual junction temperature, $T_J$ | | 150 | °C |

(1) Stresses beyond those listed under *Absolute Maximum Ratings* may cause permanent damage to the device. These are stress ratings only, which do not imply functional operation of the device at these or any other conditions beyond those indicated under *Recommended Operating Conditions*. Exposure to absolute-maximum-rated conditions for extended periods may affect device reliability.

## 7.2 Handling Ratings

| | | | MIN | MAX | UNIT |
|---|---|---|---|---|---|
| $T_{stg}$ | Storage temperature range | | –65 | 150 | °C |
| $V_{(ESD)}$ | Electrostatic discharge | Human body model (HBM), per ANSI/ESDA/JEDEC JS-001, all pins[1] | –2000 | 2000 | V |
| | | Charged device model (CDM), per JEDEC specification JESD22-C101, all pins[2] | –500 | 500 | |

(1) JEDEC document JEP155 states that 500-V HBM allows safe manufacturing with a standard ESD control process.
(2) JEDEC document JEP157 states that 250-V CDM allows safe manufacturing with a standard ESD control process.

## 7.3 Recommended Operating Conditions

over operating free-air temperature range (unless otherwise noted)

| | | MIN | NOM | MAX | UNIT |
|---|---|---|---|---|---|
| AVDD | Analog supply voltage | | 5 | | V |
| DVDD | Digital supply voltage | | 3.3 | | V |

## 7.4 Thermal Information

| THERMAL METRIC[1] | | ADS8354, ADS7854, ADS7254 | | UNIT |
|---|---|---|---|---|
| | | RTE (WQFN) | PW (TSSOP) | |
| | | 16 PINS | 16 PINS | |
| $R_{\theta JA}$ | Junction-to-ambient thermal resistance | 33.3 | 86.9 | °C/W |
| $R_{\theta JC(top)}$ | Junction-to-case (top) thermal resistance | 29.5 | 21 | |
| $R_{\theta JB}$ | Junction-to-board thermal resistance | 7.3 | 39.1 | |
| $\psi_{JT}$ | Junction-to-top characterization parameter | 0.2 | 0.8 | |
| $\psi_{JB}$ | Junction-to-board characterization parameter | 7.4 | 38.4 | |
| $R_{\theta JC(bot)}$ | Junction-to-case (bottom) thermal resistance | 0.9 | N/A | |

(1) For more information about traditional and new thermal metrics, see the *IC Package Thermal Metrics* application report, SPRA953.

Copyright © 2013–2014, Texas Instruments Incorporated

## 7.5 Electrical Characteristics: ADS8354

All minimum and maximum specifications are at $T_A$ = –40°C to 125°C, AVDD = 5 V, DVDD = 3.3 V, $V_{REF_A}$ = $V_{REF_B}$ = $V_{REF}$ = 2.5 V (internal), and $f_{DATA}$ = 700 kSPS, unless otherwise noted.
Typical values are at $T_A$ = 25°C, AVDD = 5 V, and DVDD = 3.3 V.

| PARAMETER | | TEST CONDITIONS | MIN | TYP | MAX | UNIT |
|---|---|---|---|---|---|---|
| **RESOLUTION** | | | | | | |
| | Resolution | | 16 | | | Bits |
| **DC ACCURACY (1)** | | | | | | |
| NMC | No missing codes | 32-clock mode | 16 | | | Bits |
| INL | Integral nonlinearity | 32-clock mode | –2.5 | ±1 | 2.5 | LSB |
| DNL | Differential nonlinearity | 32-clock mode | –0.99 | ±0.7 | 2 | LSB |
| $E_{IO}$ | Input offset error | | –1 | ±0.5 | 1 | mV |
| | $E_{IO}$ match | ADC_A to ADC_B | –1 | ±0.5 | 1 | mV |
| $dE_{IO}/dT$ | Input offset thermal drift | | | ±1 | | µV/°C |
| $E_G$ | Gain error | Referenced to the voltage at REFIO_x | –0.1 | ±0.05 | 0.1 | %FS |
| | $E_G$ match | ADC_A to ADC_B | –0.1 | ±0.05 | 0.1 | %FS |
| $dE_G/dT$ | Gain error thermal drift | Referenced to the voltage at REFIO_x | | ±1 | | ppm/°C |
| CMRR | Common-mode rejection ratio | Both ADCs, dc to 20 kHz | | 70 | | dB |
| **AC ACCURACY (2)** | | | | | | |
| SINAD | Signal-to-noise + distortion | $V_{REF}$ = 2.5 V, ±$V_{REF}$ input range, 32-clock mode | | 88.6 | | dB |
| | | $V_{REF}$ = 2.5 V, ±2 × $V_{REF}$ input range, 32-clock mode | | 88.4 | | dB |
| | | $V_{REF}$ = 5 V (external), ±$V_{REF}$ input range, 32-clock mode | | 92.2 | | dB |
| SNR | Signal-to-noise ratio | $V_{REF}$ = 2.5 V, ±$V_{REF}$ input range, 32-clock mode | | 89 | | dB |
| | | $V_{REF}$ = 2.5 V, ±2 × $V_{REF}$ input range, 32-clock mode | | 89 | | dB |
| | | $V_{REF}$ = 5 V (external), ±$V_{REF}$ input range, 32-clock mode | | 93 | | dB |
| THD | Total harmonic distortion | $V_{REF}$ = 2.5 V, ±$V_{REF}$ input range, 32-clock mode | | –99 | | dB |
| | | $V_{REF}$ = 2.5 V, ±2 × $V_{REF}$ input range, 32-clock mode | | –97.5 | | dB |
| | | $V_{REF}$ = 5 V (external), ±$V_{REF}$ input range, 32-clock mode | | –100 | | dB |
| SFDR | Spurious-free dynamic range | $V_{REF}$ = 2.5 V, ±$V_{REF}$ input range, 32-clock mode | | 100 | | dB |
| | | $V_{REF}$ = 2.5 V, ±2 × $V_{REF}$ input range, 32-clock mode | | 99 | | dB |
| | | $V_{REF}$ = 5 V (external), ±$V_{REF}$ input range, 32-clock mode | | 100 | | dB |
| ISOXT | ADC-to-ADC isolation | $f_{IN}$ = 15 kHz at 10 %FS, $f_{NOISE}$ = 25 kHz at FS | | –110 | | dB |

(1) LSB = least significant bit.
(2) All ac parameters are tested at –0.5 dBFS and a 20-kHz input frequency.


Copyright © 2013–2014, Texas Instruments Incorporated

## 7.6 Electrical Characteristics: ADS7854

All minimum and maximum specifications are at $T_A$ = –40°C to 125°C, AVDD = 5 V, DVDD = 3.3 V, $V_{REF_A}$ = $V_{REF_B}$ = $V_{REF}$ = 2.5 V (internal), and $f_{DATA}$ = 1 MSPS, unless otherwise noted.
Typical values are at $T_A$ = 25°C, AVDD = 5 V, and DVDD = 3.3 V.

| PARAMETER | | TEST CONDITIONS | | MIN | TYP | MAX | UNIT |
|---|---|---|---|---|---|---|---|
| **RESOLUTION** | | | | | | | |
| | Resolution | | | 14 | | | Bits |
| **DC ACCURACY (1)** | | | | | | | |
| NMC | No missing codes | 32-clock mode | | 14 | | | Bits |
| | | 16-clock mode | | 13 | | | Bits |
| INL | Integral nonlinearity | 32-clock mode | | –1.5 | ±0.5 | 1.5 | LSB |
| | | 16-clock mode | | –2 | ±0.8 | 2 | LSB |
| DNL | Differential nonlinearity | 32-clock mode | | –0.99 | ±0.4 | 1 | LSB |
| | | 16-clock mode | | –1 | ±0.7 | 2 | LSB |
| $E_{IO}$ | Input offset error | | | –1 | ±0.5 | 1 | mV |
| | $E_{IO}$ match | ADC_A to ADC_B | | –1 | ±0.5 | 1 | mV |
| $dE_{IO}/dT$ | Input offset thermal drift | | | | ±1 | | µV/°C |
| $E_G$ | Gain error | Referenced to the voltage at REFIO_x | | –0.1 | ±0.05 | 0.1 | %FS |
| | $E_G$ match | ADC_A to ADC_B | | –0.1 | ±0.05 | 0.1 | %FS |
| $dE_G/dT$ | Gain error thermal drift | Referenced to the voltage at REFIO_x | | | ±1 | | ppm/°C |
| CMRR | Common-mode rejection ratio | Both ADCs, dc to 20 kHz | | | 70 | | dB |
| **AC ACCURACY (2)** | | | | | | | |
| SINAD | Signal-to-noise + distortion | $V_{REF}$ = 2.5 V, ±$V_{REF}$ input range | 32-clock mode | 81.8 | 83.7 | | dB |
| | | | 16-clock mode | | 82.9 | | dB |
| | | $V_{REF}$ = 2.5 V, ±2 × $V_{REF}$ input range | 32-clock mode | | 83.7 | | dB |
| | | | 16-clock mode | | 82.9 | | dB |
| | | $V_{REF}$ = 5 V (external), ±$V_{REF}$ input range | 32-clock mode | | 84.6 | | dB |
| | | | 16-clock mode | | 84.1 | | dB |
| SNR | Signal-to-noise ratio | $V_{REF}$ = 2.5 V, ±$V_{REF}$ input range | 32-clock mode | 82 | 84 | | dB |
| | | | 16-clock mode | | 83.5 | | dB |
| | | $V_{REF}$ = 2.5 V, ±2 × $V_{REF}$ input range | 32-clock mode | | 84 | | dB |
| | | | 16-clock mode | | 83.5 | | dB |
| | | $V_{REF}$ = 5 V (external), ±$V_{REF}$ input range | 32-clock mode | | 85 | | dB |
| | | | 16-clock mode | | 84.5 | | dB |
| THD | Total harmonic distortion | $V_{REF}$ = 2.5 V, ±$V_{REF}$ input range | 32-clock mode | | –95 | | dB |
| | | | 16-clock mode | | –92 | | dB |
| | | $V_{REF}$ = 2.5 V, ±2 × $V_{REF}$ input range | 32-clock mode | | –95 | | dB |
| | | | 16-clock mode | | –92 | | dB |
| | | $V_{REF}$ = 5 V (external), ±$V_{REF}$ input range | 32-clock mode | | –98 | | dB |
| | | | 16-clock mode | | –93 | | dB |
| SFDR | Spurious-free dynamic range | $V_{REF}$ = 2.5 V, ±$V_{REF}$ input range | 32-clock mode | | 97.5 | | dB |
| | | | 16-clock mode | | 95 | | dB |
| | | $V_{REF}$ = 2.5 V, ±2 × $V_{REF}$ input range | 32-clock mode | | 97.5 | | dB |
| | | | 16-clock mode | | 95 | | dB |
| | | $V_{REF}$ = 5 V (external), ±$V_{REF}$ input range | 32-clock mode | | 99 | | dB |
| | | | 16-clock mode | | 95 | | dB |
| ISOXT | ADC-to-ADC isolation | $f_{IN}$ = 15 kHz at 10 %FS, $f_{NOISE}$ = 25 kHz at FS | | | –90 | | dB |

(1) LSB = least significant bit.
(2) All ac parameters are tested at –0.5 dBFS and a 20-kHz input frequency.

Copyright © 2013–2014, Texas Instruments Incorporated

## 7.7 Electrical Characteristics: ADS7254

All minimum and maximum specifications are at $T_A$ = –40°C to 125°C, AVDD = 5 V, DVDD = 3.3 V, $V_{REF_A}$ = $V_{REF_B}$ = $V_{REF}$ = 2.5 V (internal), and $f_{DATA}$ = 1 MSPS, unless otherwise noted.
Typical values are at $T_A$ = 25°C, AVDD = 5 V, and DVDD = 3.3 V.

| PARAMETER | | TEST CONDITIONS | MIN | TYP | MAX | UNIT |
|---|---|---|---|---|---|---|
| **RESOLUTION** | | | | | | |
| | Resolution | | 12 | | | Bits |
| **DC ACCURACY (1)** | | | | | | |
| NMC | No missing codes | | 12 | | | Bits |
| INL | Integral nonlinearity | | –1 | ±0.25 | 1 | LSB |
| DNL | Differential nonlinearity | | –0.99 | ±0.25 | 1 | LSB |
| $E_{IO}$ | Input offset error | | –1 | ±0.5 | 1 | mV |
| | $E_{IO}$ match | ADC_A to ADC_B | –1 | ±0.5 | 1 | mV |
| $dE_{IO}/dT$ | Input offset thermal drift | | | ±1 | | µV/°C |
| $E_G$ | Gain error | Referenced to the voltage at REFIO_x | –0.1 | ±0.05 | 0.1 | %FS |
| | $E_G$ match | ADC_A to ADC_B | –0.1 | ±0.05 | 0.1 | %FS |
| $dE_G/dT$ | Gain error thermal drift | Referenced to the voltage at REFIO_x | | ±1 | | ppm/°C |
| CMRR | Common-mode rejection ratio | Both ADCs, dc to 20 kHz | | 70 | | dB |
| **AC ACCURACY (2)** | | | | | | |
| SINAD | Signal-to-noise + distortion | $V_{REF}$ = 2.5 V, ±$V_{REF}$ input range | | 73.4 | | dB |
| | | $V_{REF}$ = 2.5 V, ±2 × $V_{REF}$ input range | 72.4 | 73.4 | | dB |
| | | $V_{REF}$ = 5 V (external), ±$V_{REF}$ input range | | 73.9 | | dB |
| SNR | Signal-to-noise ratio | $V_{REF}$ = 2.5 V, ±$V_{REF}$ input range | | 73.5 | | dB |
| | | $V_{REF}$ = 2.5 V, ±2 × $V_{REF}$ input range | 72.5 | 73.5 | | dB |
| | | $V_{REF}$ = 5 V (external), ±$V_{REF}$ input range | | 74 | | dB |
| THD | Total harmonic distortion | $V_{REF}$ = 2.5 V, ±$V_{REF}$ input range | | –92 | | dB |
| | | $V_{REF}$ = 2.5 V, ±2 × $V_{REF}$ input range | | –92 | | dB |
| | | $V_{REF}$ = 5 V (external), ±$V_{REF}$ input range | | –92 | | dB |
| SFDR | Spurious-free dynamic range | $V_{REF}$ = 2.5 V, ±$V_{REF}$ input range | | 95 | | dB |
| | | $V_{REF}$ = 2.5 V, ±2 × $V_{REF}$ input range | | 95 | | dB |
| | | $V_{REF}$ = 5 V (external), ±$V_{REF}$ input range | | 95 | | dB |
| ISOXT | ADC-to-ADC isolation | $f_{IN}$ = 15 kHz at 10 %FS, $f_{NOISE}$ = 25 kHz at FS | | –100 | | dB |

(1) LSB = least significant bit.
(2) All ac parameters are tested at –0.5 dBFS and a 20-kHz input frequency.


Copyright © 2013–2014, Texas Instruments Incorporated

## 7.8 Electrical Characteristics: All Devices

All minimum and maximum specifications are at $T_A$ = –40°C to 125°C, AVDD = 5 V, DVDD = 3.3 V, $V_{REF_A}$ = $V_{REF_B}$ = $V_{REF}$ = 2.5 V, and $f_{DATA}$ = maximum, unless otherwise noted.
Typical values are at $T_A$ = 25°C, AVDD = 5 V, and DVDD = 3.3 V.

| PARAMETER | | TEST CONDITIONS | MIN | TYP | MAX | UNIT |
|---|---|---|---|---|---|---|
| **ANALOG INPUT** | | | | | | |
| FSR | Full-scale input range (1) (AINP_x – AINM_x) | ±$V_{REF}$ range | –$V_{REF}$ | | $V_{REF}$ | V |
| | | ±2 × $V_{REF}$ range, AVDD ≥ 2 × $V_{REF}$ | –2 × $V_{REF}$ | | 2 × $V_{REF}$ | V |
| $V_{IN}$ | Absolute input voltage (AINP_x and AINM_x to REFGND) | ±$V_{REF}$ range | 0 | | $V_{REF}$ | V |
| | | ±2 × $V_{REF}$ range, AVDD ≥ 2 × $V_{REF}$ | 0 | | 2 × $V_{REF}$ | V |
| $V_{CM}$ | Common-mode voltage range (AINP_x + AINM_x) / 2 | ±$V_{REF}$ range | ($V_{REF}$ / 2) – 0.1 | $V_{REF}$ / 2 | ($V_{REF}$ / 2) + 0.1 | V |
| | | ±2 × $V_{REF}$ range | $V_{REF}$ – 0.1 | $V_{REF}$ | $V_{REF}$ + 0.1 | V |
| $C_i$ | Input capacitance | In sample mode | | 40 | | pF |
| | | In hold mode | | 4 | | pF |
| $I_{lkg(i)}$ | Input leakage current | | | 0.1 | | µA |
| **INTERNAL VOLTAGE REFERENCE** | | | | | | |
| $V_{REFOUT}$ | Reference output voltage | REFDAC_x = 1FFh (default), at 25°C | 2.495 | 2.500 | 2.505 | V |
| $V_{REF\text{-}match}$ | $V_{REF_A}$ to $V_{REF_B}$ matching | REFDAC_x = 1FFh (default), at 25°C | | ±1 | | mV |
| | REFDAC_x resolution (2) | | | 1.1 | | mV |
| $dV_{REFOUT}/dT$ | Reference voltage temperature drift | REFDAC_x = 1FFh (default) | | ±10 | | ppm/°C |
| $dV_{REFOUT}/dt$ | Long-term stability | 1000 hours | | 150 | | ppm |
| $R_O$ | Internal reference output impedance | | | 1 | | Ω |
| $I_{REFOUT}$ | Reference output dc current | | | 2 | | mA |
| $C_{REFOUT}$ | Recommended output capacitor | | | 10 | | µF |
| $t_{REFON}$ | Reference output settling time | For $C_{REF}$ = 10 µF | | 8 | | ms |
| **VOLTAGE REFERENCE INPUT** | | | | | | |
| $V_{REF}$ | Reference voltage (input) | ±$V_{REF}$ range | 2.4 | 2.5 | AVDD | V |
| | | ±2 × $V_{REF}$ range | 2.4 | 2.5 | AVDD / 2 | V |
| $I_{REF}$ | Average Reference input current | Per ADC | | 300 | | µA |
| $C_{REF}$ | External ceramic reference capacitance | | | 10 | | µF |
| $I_{lkg(dc)}$ | DC leakage current | | | ±0.1 | | µA |
| **SAMPLING DYNAMICS** | | | | | | |
| $t_A$ | Aperture delay | | | 8 | | ns |
| | $t_A$ match | ADC_A to ADC_B | | 40 | | ps |
| $t_{AJIT}$ | Aperture jitter | | | 50 | | ps |

(1) Ideal input span, does not include gain or offset error.
(2) Refer to the *Reference* section for more details.

## Electrical Characteristics: All Devices (continued)

All minimum and maximum specifications are at $T_A$ = –40°C to 125°C, AVDD = 5 V, DVDD = 3.3 V, $V_{REF_A}$ = $V_{REF_B}$ = $V_{REF}$ = 2.5 V, and $f_{DATA}$ = maximum, unless otherwise noted.
Typical values are at $T_A$ = 25°C, AVDD = 5 V, and DVDD = 3.3 V.

| PARAMETER | | TEST CONDITIONS | | MIN | TYP | MAX | UNIT |
|---|---|---|---|---|---|---|---|
| **DIGITAL INPUTS**(3) | | | | | | | |
| $V_{IH}$ | High-level input voltage | DVDD > 2.3 V | | 0.7 DVDD | | DVDD + 0.3 | V |
| | | DVDD ≤ 2.3 V | | 0.8 DVDD | | DVDD + 0.3 | V |
| $V_{IL}$ | Low-level input voltage | DVDD > 2.3 V | | –0.3 | | 0.3 DVDD | V |
| | | DVDD ≤ 2.3 V | | –0.3 | | 0.2 DVDD | V |
| | Input current | | | | ±10 | | nA |
| **DIGITAL OUTPUTS**(3) | | | | | | | |
| $V_{OH}$ | High-level output voltage | $I_{OH}$ = 500-µA source | | 0.8 DVDD | | DVDD | V |
| $V_{OL}$ | Low-level output voltage | $I_{OH}$ = 500-µA sink | | 0 | | 0.2 DVDD | V |
| **POWER SUPPLY** | | | | | | | |
| AVDD | Analog supply voltage (AVDD to AGND) | $\pm V_{REF}$ range | Internal reference | 4.5 | 5.0 | 5.5 | V |
| | | | External reference: $V_{EXT_REF}$ < 4.5 V | 4.5 | 5.0 | 5.5 | V |
| | | | External reference: $V_{EXT_REF}$ > 4.5 V | $V_{EXT_REF}$ | 5.0 | 5.5 | V |
| | | $\pm 2 \times V_{REF}$ range | Internal reference | 5.0 | 5.0 | 5.5 | V |
| | | | External reference | $2 \times V_{REF_EXT}$ | 5.0 | 5.5 | V |
| DVDD | Digital supply voltage (DVDD to AGND) | | | 1.65 | | 5.5 | V |
| AIDD | Analog supply current | AVDD = 5 V, fastest throughput internal reference | | | 8.5 | 10 | mA |
| | | AVDD = 5 V, fastest throughput external reference(4) | | | 7.5 | | mA |
| | | AVDD = 5 V, no conversion internal reference | | | 5.5 | 7 | mA |
| | | AVDD = 5 V, no conversion external reference(4) | | | 4.5 | | mA |
| | | AVDD = 5 V, STANDBY mode Internal Reference | | | 2.5 | | mA |
| | | AVDD = 5 V, STANDBY mode external reference(4) | | | 1 | | mA |
| | | Power-down mode | | | 10 | 50 | µA |
| DIDD | Digital supply current | DVDD = 3.3 V, $C_{LOAD}$ = 10 pF, fastest throughput | | | 0.5 | | mA |
| | | DVDD = 5 V, $C_{LOAD}$ = 10 pF fastest throughput | | | 1 | | mA |
| $P_D$ | Power dissipation (normal operation) | AVDD = 5V, fastest throughput, internal reference | | | 42.5 | 50 | mW |

(3) Specified by design; not production tested.
(4) With internal reference powered down, CFR.B6 = 0.


Copyright © 2013–2014, Texas Instruments Incorporated

## 7.9 Timing Requirements: Interface Mode(1)

| PARAMETER | | ASSOCIATED FIGURES |
|---|---|---|
| $t_{CLK}$ | CLOCK period | Figure 1, Figure 90, Figure 91, Figure 92, Figure 93 |
| $t_{ACQ}$ | Acquisition time | Figure 90, Figure 91, Figure 92, Figure 93 |
| $t_{CONV}$ | Conversion time | Figure 90, Figure 91, Figure 92, Figure 93 |

(1) These parameters are specific to the interface mode of operation. Refer to the *Conversion Data Read* section for more details.

## 7.10 Timing Characteristics: Serial Interface

| PARAMETER | | TEST CONDITIONS | | ASSOCIATED FIGURES | MIN | TYP | MAX | UNIT |
|---|---|---|---|---|---|---|---|---|
| **TIMING REQUIREMENTS** | | | | | | | | |
| $t_{PH_CK}$ | CLOCK high time | | | Figure 1 | 0.4 | | 0.6 | $t_{CLK}$ |
| $t_{PL_CK}$ | CLOCK low time | | | | 0.4 | | 0.6 | $t_{CLK}$ |
| $f_{CLK}$ | CLOCK frequency | | | | | | 1 / $t_{CLK}$ | MHz |
| $t_{PH_CS}$ | $\overline{CS}$ high time | | | Figure 1 | 40 | | | ns |
| $t_{PH_CS_SHRT}$ | $\overline{CS}$ high time after frame abort | ADS8354 | | Figure 98 | 150 | | | ns |
| | | ADS7854 | | | 100 | | | ns |
| | | ADS7254 | | | 70 | | | ns |
| $t_{SU_CSCK}$ | Setup time: $\overline{CS}$ falling edge to SCLK falling edge | | | Figure 1 | 15 | | | ns |
| $t_{D_CKCS}$ | Delay time: Last SCLK falling edge to $\overline{CS}$ rising edge | | | | 15 | | | ns |
| $t_{SU_CKDI}$ | Setup time: DIN data valid to SCLK falling edge | | | | 5 | | | ns |
| $t_{HT_CKDI}$ | Hold time: SCLK falling edge to (previous) data valid on DIN | | | | 5 | | | ns |
| $t_{PU_STDBY}$ | Power-up time from STANDBY mode | | | Figure 95 | 1 | | | µs |
| $t_{PU_SPD}$ | Power-up time from SPD mode | With internal reference | | Figure 97 | 3 | | | ms |
| | | With external reference | | | 1 | | | ms |
| **TIMING SPECIFICATIONS** | | | | | | | | |
| $t_{THROUGHPUT}$ | Throughput time | ADS8354 | 32-CLK mode | Figure 90, Figure 91 | 1.425 | | | µs |
| | | ADS7854 | 32-CLK mode | | 1 | | | µs |
| | | | 16-CLK mode | Figure 92, Figure 93 | 1 | | | µs |
| | | ADS7254 | 32-CLK mode | Figure 90, Figure 91 | 1 | | | µs |
| | | | 16-CLK mode | Figure 92, Figure 93 | 1 | | | µs |
| $f_{THROUGHPUT}$ | Throughput | | | Figure 90, Figure 91, Figure 92, Figure 93 | | | 1 / $t_{THROUGHPUT}$ | kSPS |
| $t_{DV_CSDO}$ | Delay time: $\overline{CS}$ falling edge to data enable | | | Figure 1 | | | 12 | ns |
| $t_{DZ_CSDO}$ | Delay time: $\overline{CS}$ rising edge to data going to 3-state | | | | | | 12 | ns |
| $t_{D_CKDO}$ | Delay time: SCLK falling edge to next data valid | | | | | | 20 | ns |

Copyright © 2013–2014, Texas Instruments Incorporated

Figure 1 shows the details of the serial interface between the device and the digital host controller.

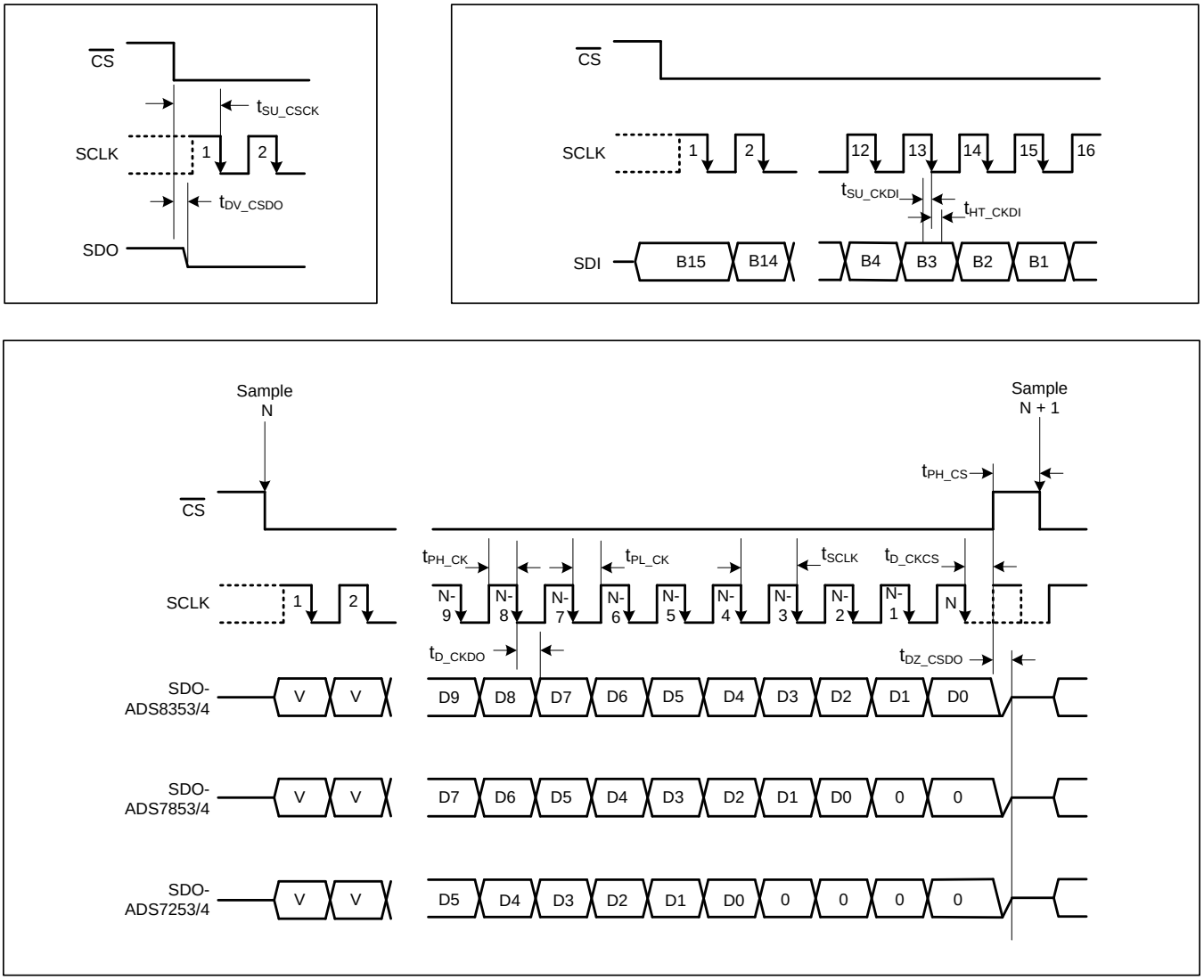


**Figure 1. Serial Interface Timing Diagram**


Copyright © 2013–2014, Texas Instruments Incorporated

## 7.11 Typical Characteristics: ADS8354

At $T_A$ = 25°C, AVDD = 5 V, DVDD = 3.3 V, $V_{REF}$ = 2.5 V (internal), and $f_{DATA}$ = 700 kSPS, unless otherwise noted.

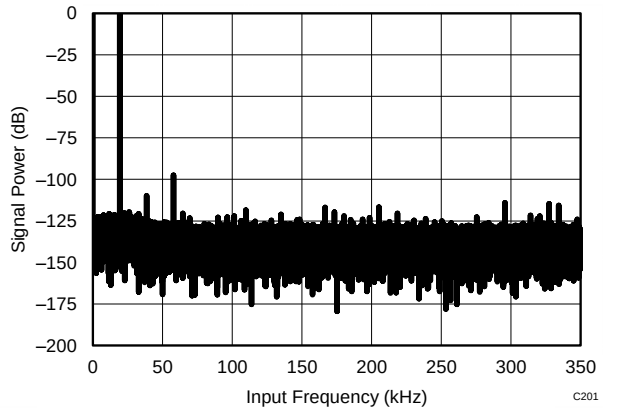


$f_{IN}$ = 20 kHz SNR = 89.5 dB THD = –100 dB

**Figure 2. Typical FFT**

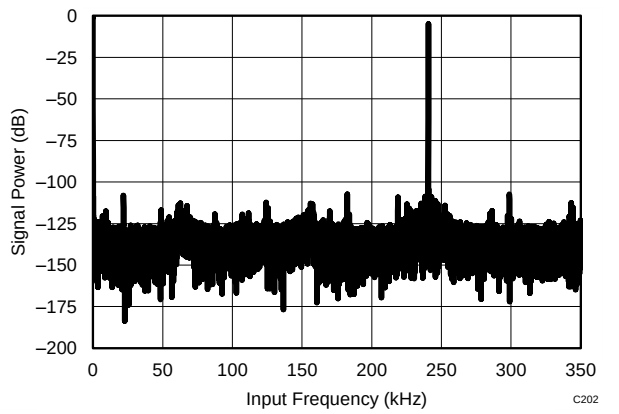


$f_{IN}$ = 250 kHz SNR = 82.2 dB THD = –98 dB

**Figure 3. Typical FFT**

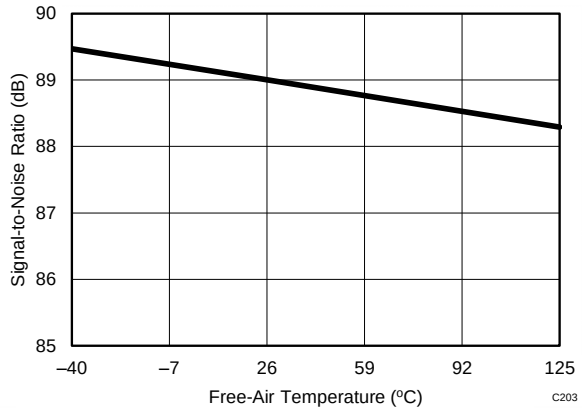


$f_{IN}$ = 2 kHz

**Figure 4. SNR vs Temperature**

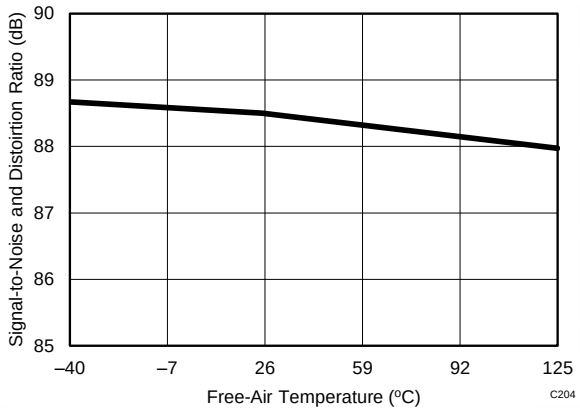


$f_{IN}$ = 2 kHz

**Figure 5. SINAD vs Temperature**

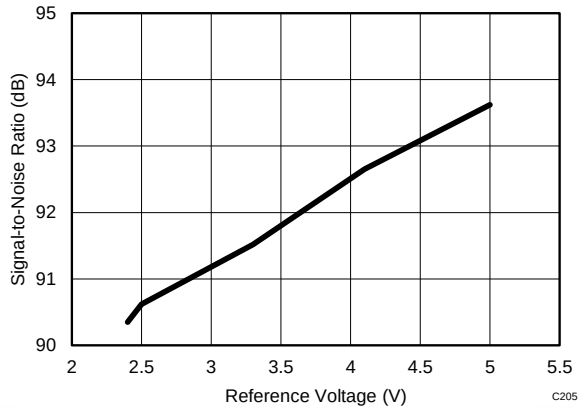


$f_{IN}$ = 2 kHz

**Figure 6. SNR vs Reference Voltage**

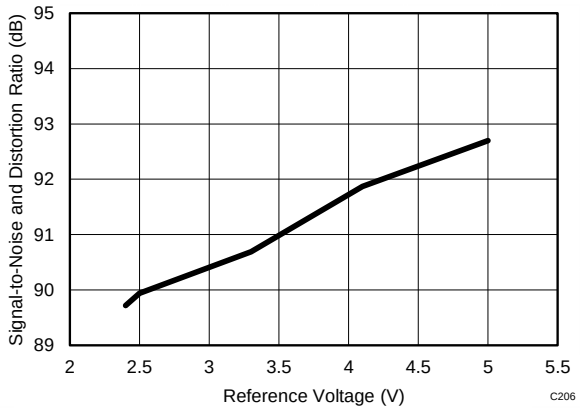


$f_{IN}$ = 2 kHz

**Figure 7. SINAD vs Reference Voltage**

## Typical Characteristics: ADS8354 (continued)

At $T_A$ = 25°C, AVDD = 5 V, DVDD = 3.3 V, $V_{REF}$ = 2.5 V (internal), and $f_{DATA}$ = 700 kSPS, unless otherwise noted.

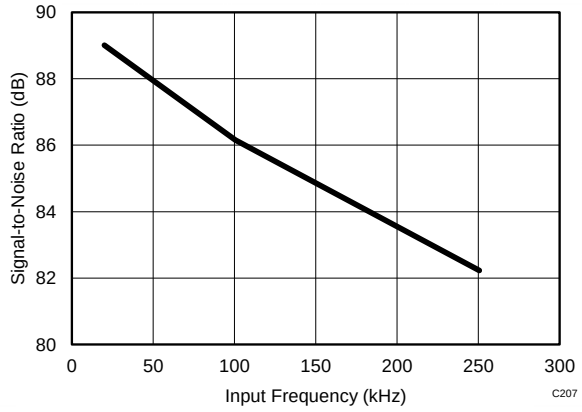


$V_{REF}$ = 5 V

**Figure 8. SNR vs Input Frequency**

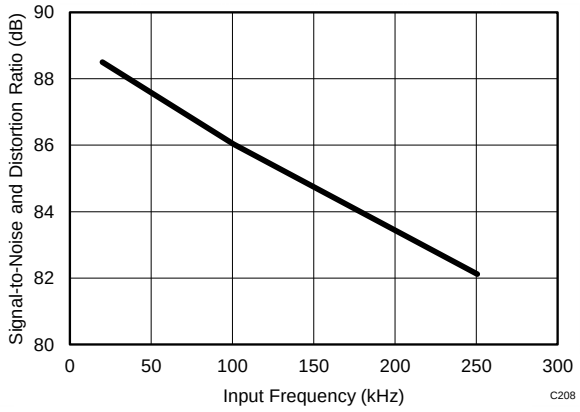


$V_{REF}$ = 5 V

**Figure 9. SINAD vs Input Frequency**

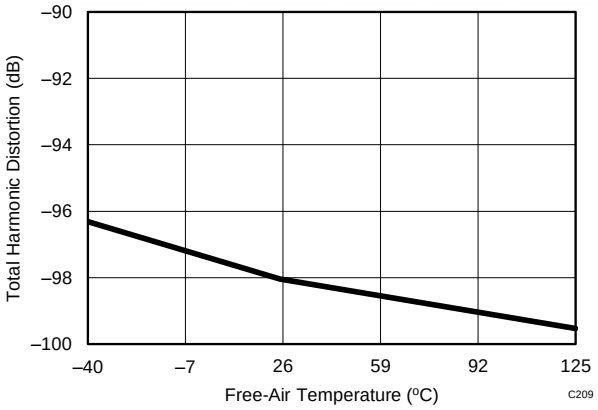


$f_{IN}$ = 2 kHz

**Figure 10. THD vs Temperature**

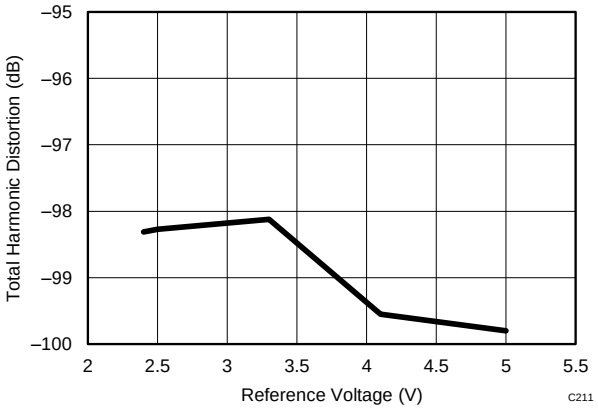


$f_{IN}$ = 2 kHz

**Figure 11. THD vs Reference Voltage**

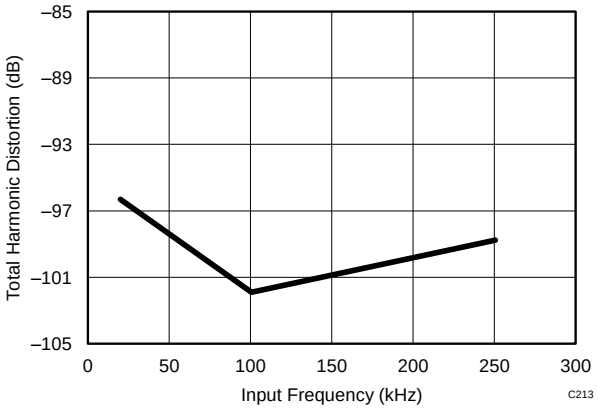


$V_{REF}$ = 5 V

**Figure 12. THD vs Input Frequency**

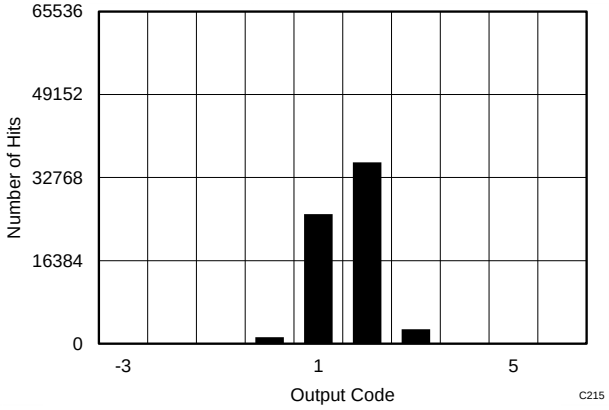


65536 data points $V_{IN\text{-}DIFF}$ = 0 V

**Figure 13. DC Histogram**


Copyright © 2013–2014, Texas Instruments Incorporated

## Typical Characteristics: ADS8354 (continued)

At $T_A$ = 25°C, AVDD = 5 V, DVDD = 3.3 V, $V_{REF}$ = 2.5 V (internal), and $f_{DATA}$ = 700 kSPS, unless otherwise noted.

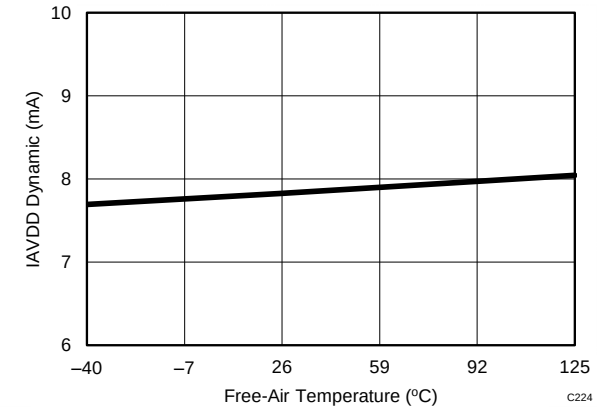


**Figure 14. Analog Supply Current vs Temperature**

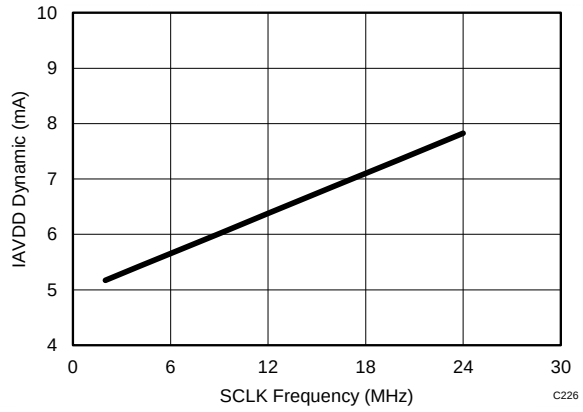


**Figure 15. Analog Supply Current vs SCLK Frequency**

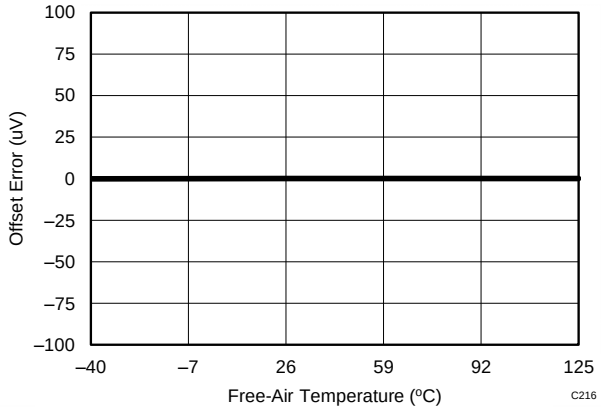


**Figure 16. Offset Error vs Temperature**

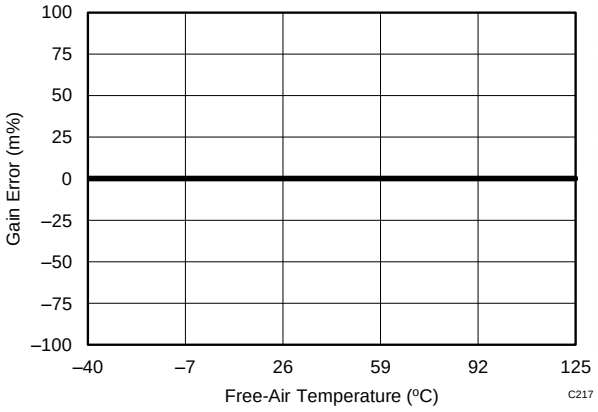


**Figure 17. Gain Error vs Temperature**

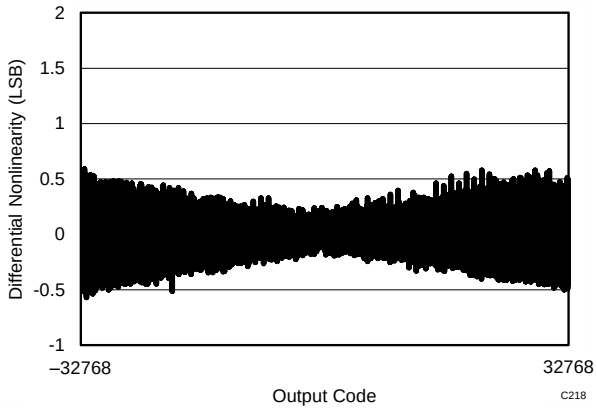


**Figure 18. Typical DNL**

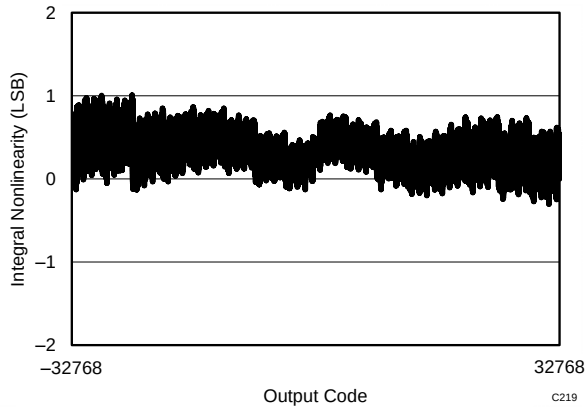


**Figure 19. Typical INL**

## Typical Characteristics: ADS8354 (continued)

At $T_A$ = 25°C, AVDD = 5 V, DVDD = 3.3 V, $V_{REF}$ = 2.5 V (internal), and $f_{DATA}$ = 700 kSPS, unless otherwise noted.

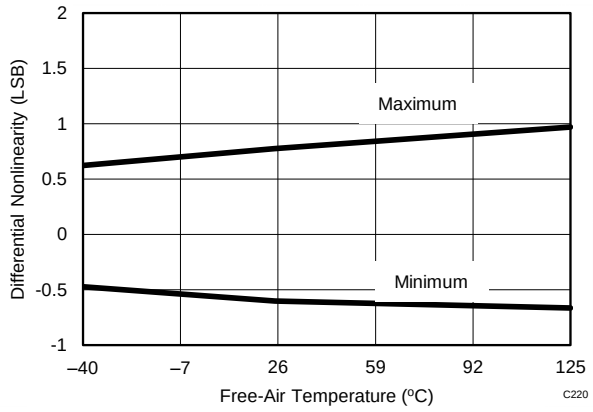


**Figure 20. DNL vs Temperature**

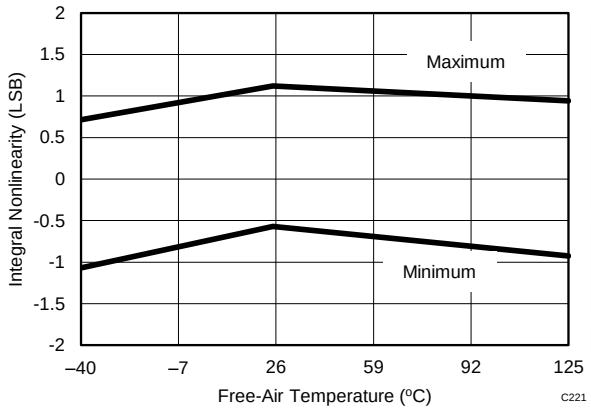


**Figure 21. INL vs Temperature**

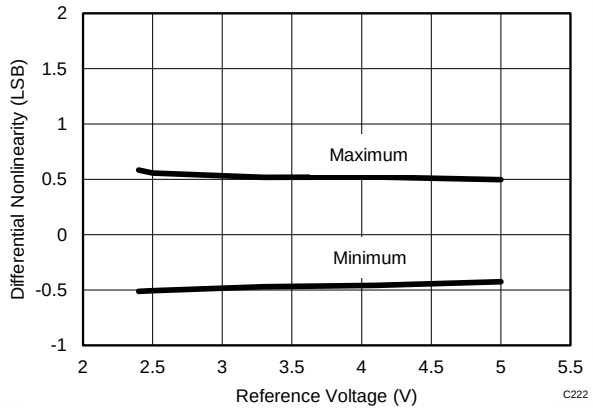


**Figure 22. DNL vs Reference Voltage**

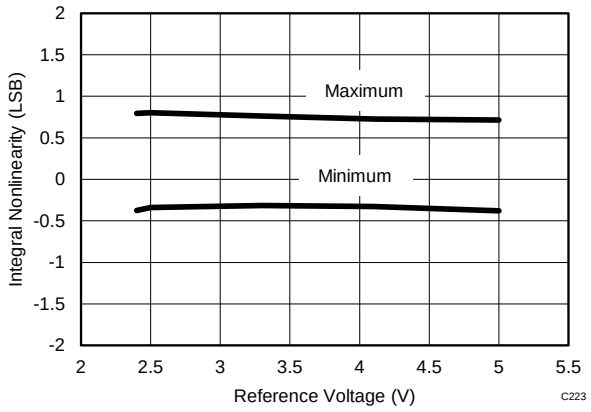


**Figure 23. INL vs Reference Voltage**


Copyright © 2013–2014, Texas Instruments Incorporated

## 7.12 Typical Characteristics: ADS7854

At $T_A$ = 25°C, AVDD = 5 V, DVDD = 3.3 V, $V_{REF}$ = 2.5 V (internal), and $f_{DATA}$ = 1 MSPS, unless otherwise noted.

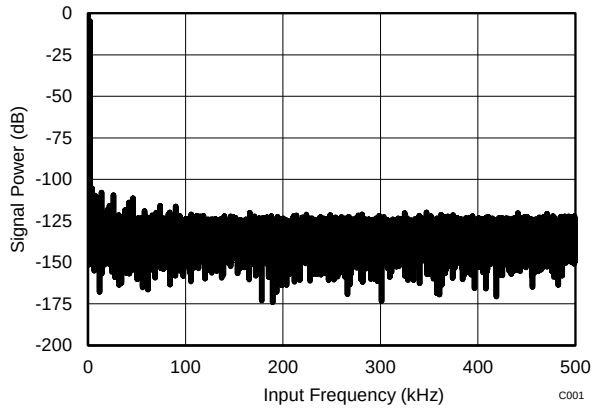


$f_{IN}$ = 2 kHz SNR = 83.8 dB THD = –96.1 dB
16-CLK interface

**Figure 24. Typical FFT**

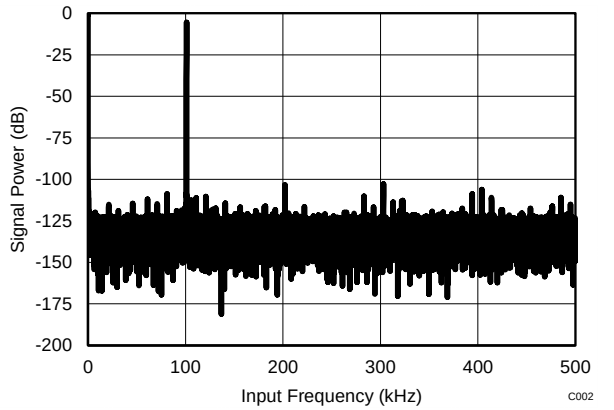


$f_{IN}$ = 100 kHz SNR = 83.5 dB THD = –93.1 dB
16-CLK interface

**Figure 25. Typical FFT**

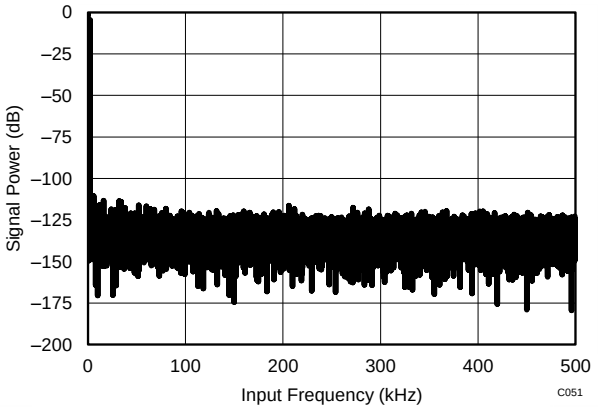


$f_{IN}$ = 2 kHz SNR = 84.9 dB THD = –98.7 dB
32-CLK interface

**Figure 26. Typical FFT**

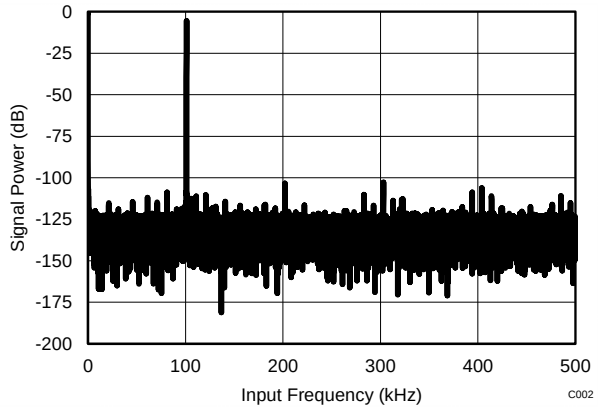


$f_{IN}$ = 100 kHz SNR = 84.4 dB THD = –95.1 dB
32-CLK interface

**Figure 27. Typical FFT**

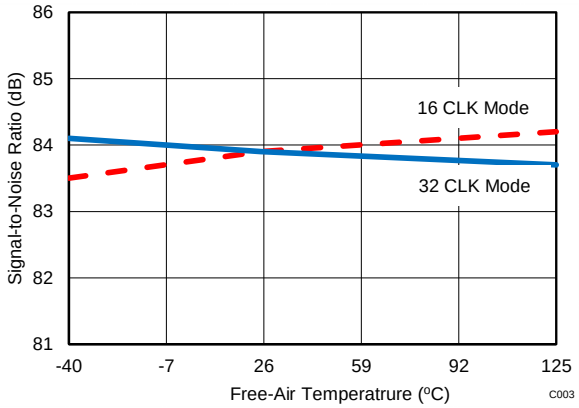


$f_{IN}$ = 2 kHz

**Figure 28. SNR vs Temperature**

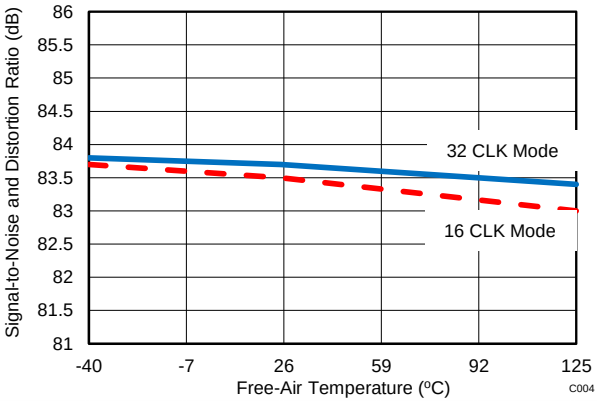


$f_{IN}$ = 2 kHz

**Figure 29. SINAD vs Temperature**

## Typical Characteristics: ADS7854 (continued)

At $T_A$ = 25°C, AVDD = 5 V, DVDD = 3.3 V, $V_{REF}$ = 2.5 V (internal), and $f_{DATA}$ = 1 MSPS, unless otherwise noted.

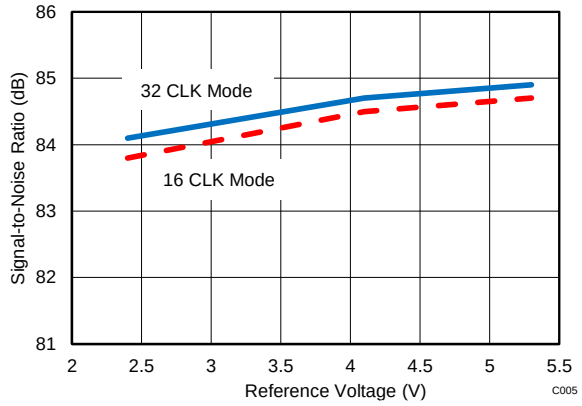


$f_{IN}$ = 2 kHz

**Figure 30. SNR vs Reference Voltage**

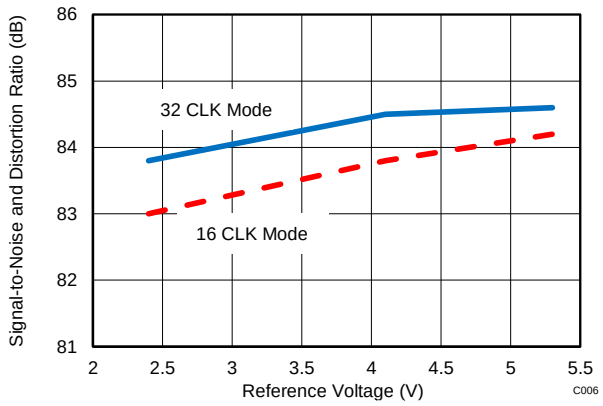


$f_{IN}$ = 2 kHz

**Figure 31. SINAD vs Reference Voltage**

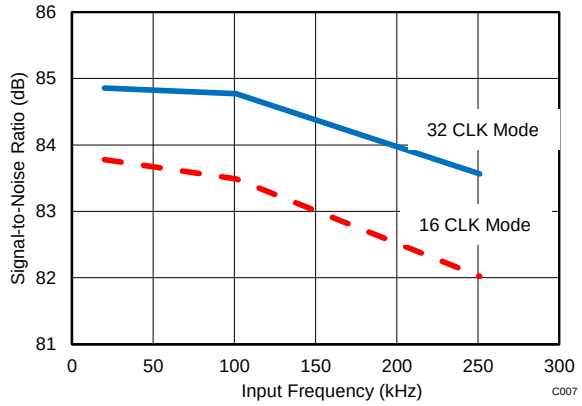


$V_{REF}$ = 5 V

**Figure 32. SNR vs Input Frequency**

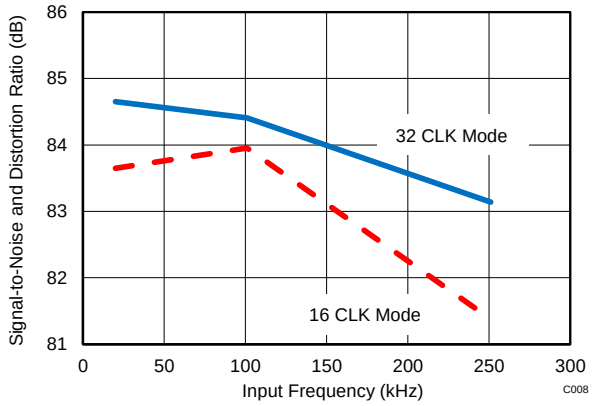


$V_{REF}$ = 5 V

**Figure 33. SINAD vs Input Frequency**

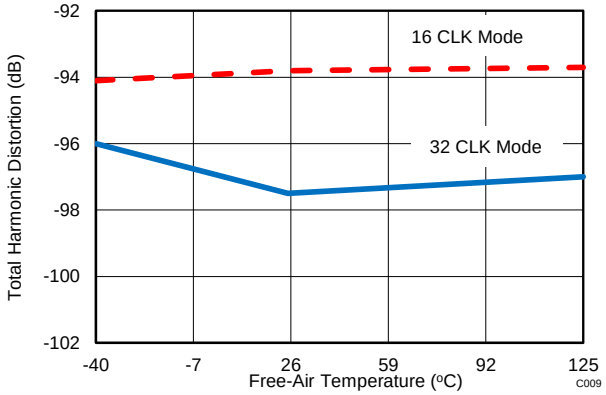


$f_{IN}$ = 2 kHz

**Figure 34. THD vs Temperature**

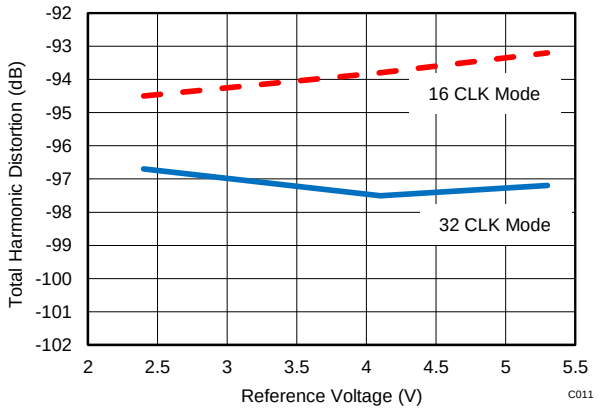


$f_{IN}$ = 2 kHz

**Figure 35. THD vs Reference Voltage**


Copyright © 2013–2014, Texas Instruments Incorporated

## Typical Characteristics: ADS7854 (continued)

At $T_A$ = 25°C, AVDD = 5 V, DVDD = 3.3 V, $V_{REF}$ = 2.5 V (internal), and $f_{DATA}$ = 1 MSPS, unless otherwise noted.

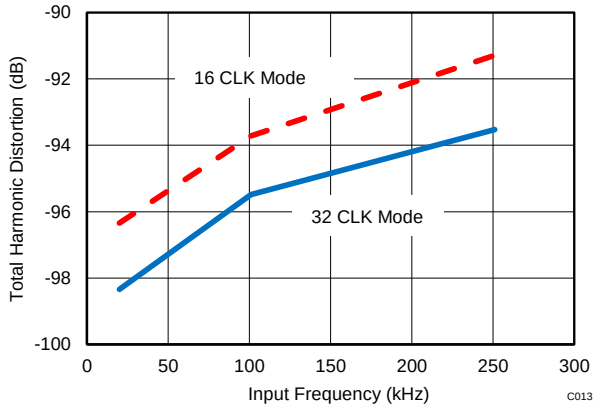


$V_{REF}$ = 5 V

**Figure 36. THD vs Input Frequency**

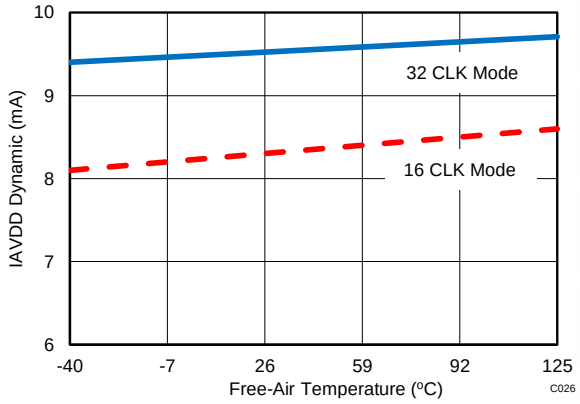


**Figure 37. Analog Supply Current vs Temperature**

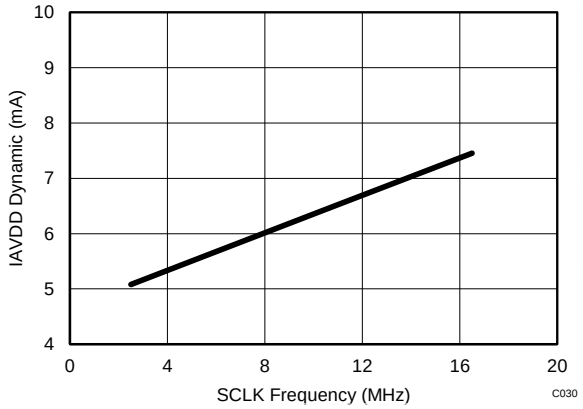


16-CLK interface

**Figure 38. Analog Supply Current vs SCLK Frequency**

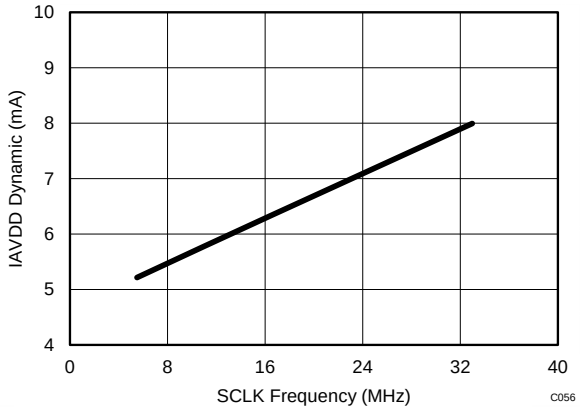


32-CLK interface

**Figure 39. Analog Supply Current vs SCLK Frequency**

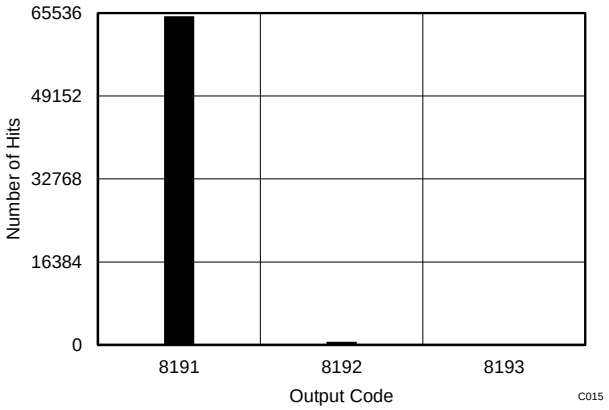


16-CLK interface 65536 data points $V_{IN-DIFF}$ = 0 V

**Figure 40. DC Histogram**

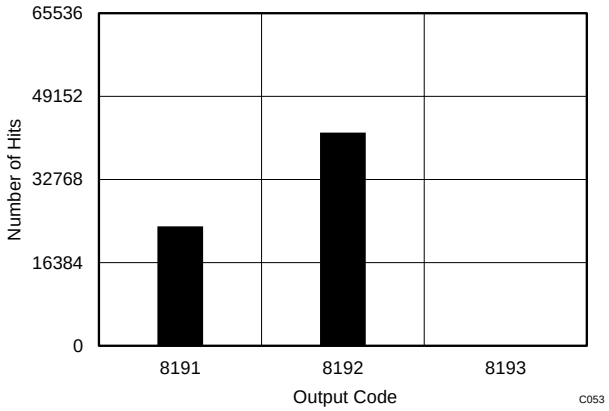


32-CLK interface 65536 data points $V_{IN-DIFF}$ = 0 V

**Figure 41. DC Histogram**

## Typical Characteristics: ADS7854 (continued)

At $T_A$ = 25°C, AVDD = 5 V, DVDD = 3.3 V, $V_{REF}$ = 2.5 V (internal), and $f_{DATA}$ = 1 MSPS, unless otherwise noted.

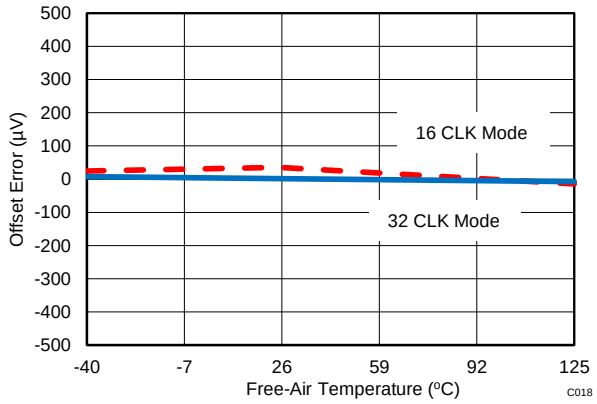


**Figure 42. Offset Error vs Temperature**

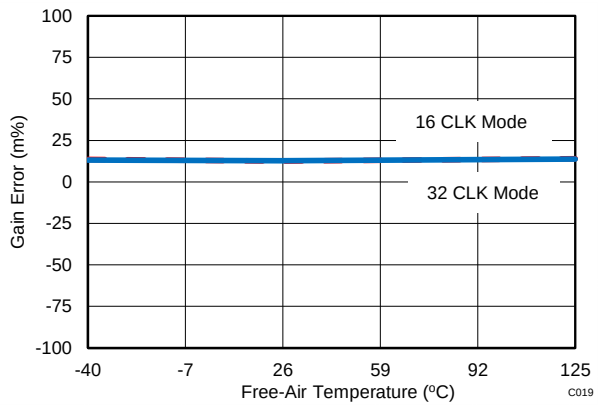


**Figure 43. Gain Error vs Temperature**

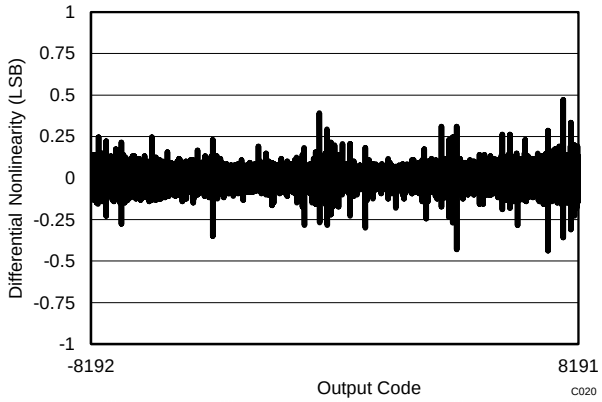


16-CLK interface

**Figure 44. Typical DNL**

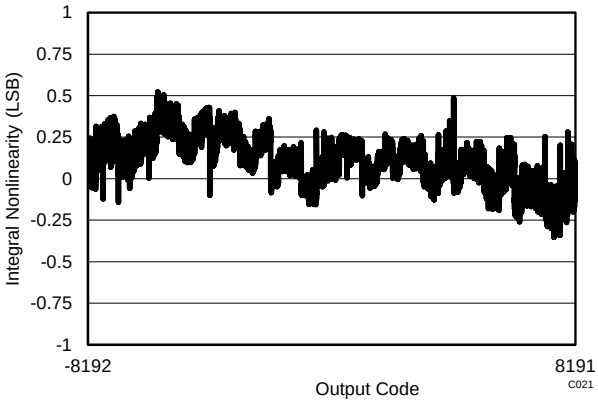


16-CLK interface

**Figure 45. Typical INL**

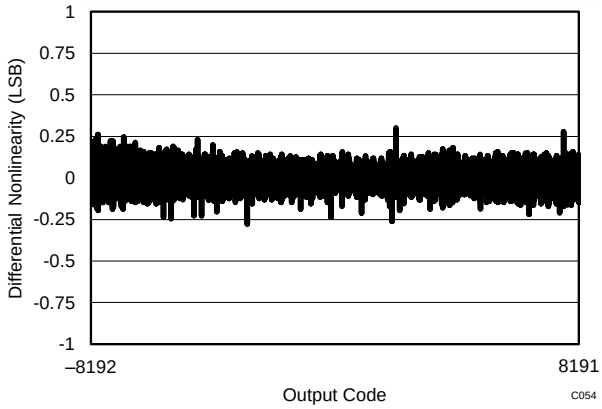


32-CLK interface

**Figure 46. Typical DNL**

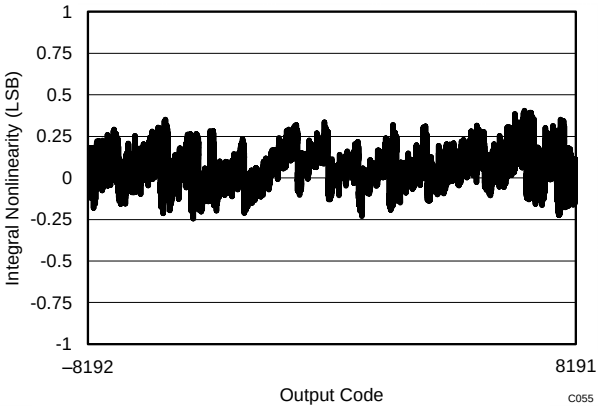


32-CLK interface

**Figure 47. Typical INL**


Copyright © 2013–2014, Texas Instruments Incorporated

## Typical Characteristics: ADS7854 (continued)

At $T_A$ = 25°C, AVDD = 5 V, DVDD = 3.3 V, $V_{REF}$ = 2.5 V (internal), and $f_{DATA}$ = 1 MSPS, unless otherwise noted.

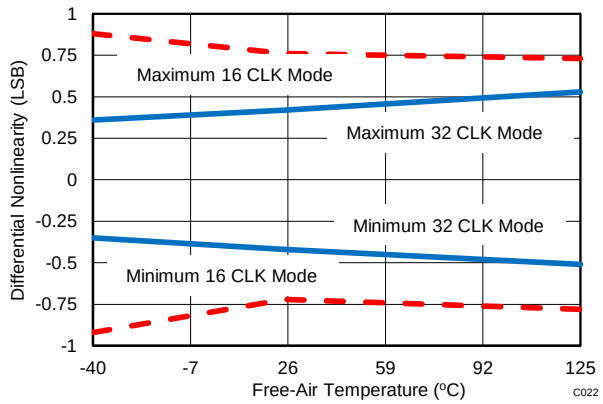


**Figure 48. DNL vs Temperature**

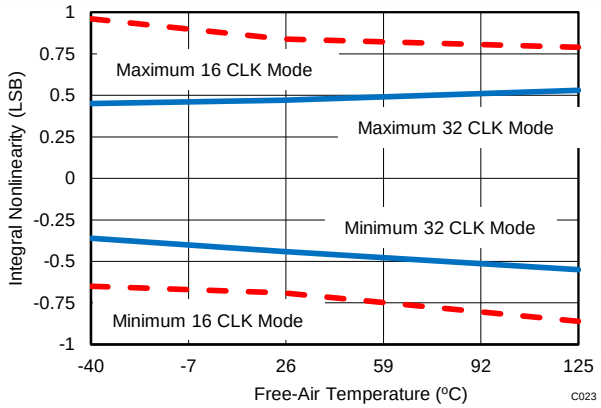


**Figure 49. INL vs Temperature**

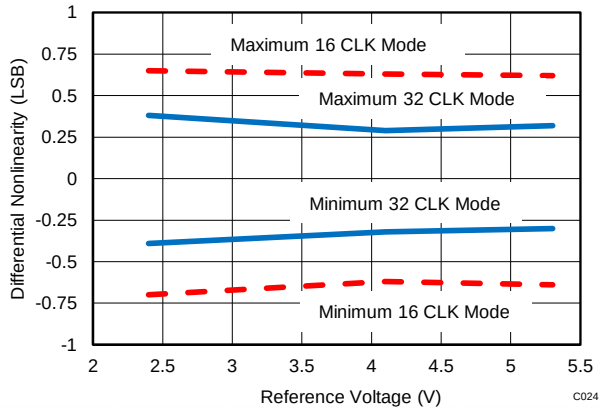


**Figure 50. DNL vs Reference Voltage**

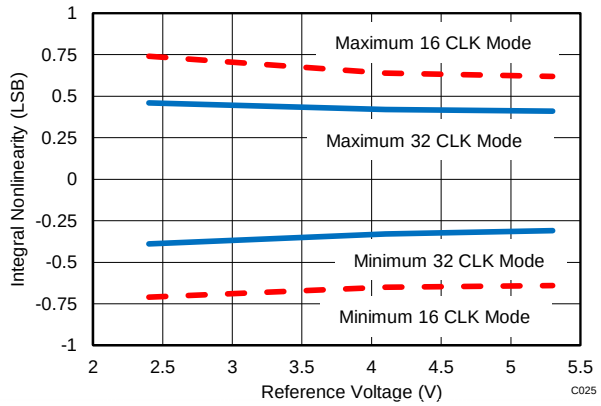


**Figure 51. INL vs Reference Voltage**

## 7.13 Typical Characteristics: ADS7254

At $T_A$ = 25°C, AVDD = 5 V, DVDD = 3.3 V, $V_{REF}$ = 2.5 V (internal), and $f_{DATA}$ = 1 MSPS, unless otherwise noted.

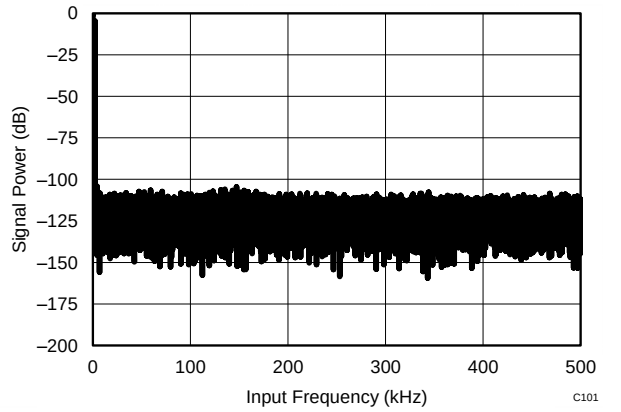


$f_{IN}$ = 2 kHz SNR = 73.5 dB THD = –91.1 dB
16-CLK interface

**Figure 52. Typical FFT**

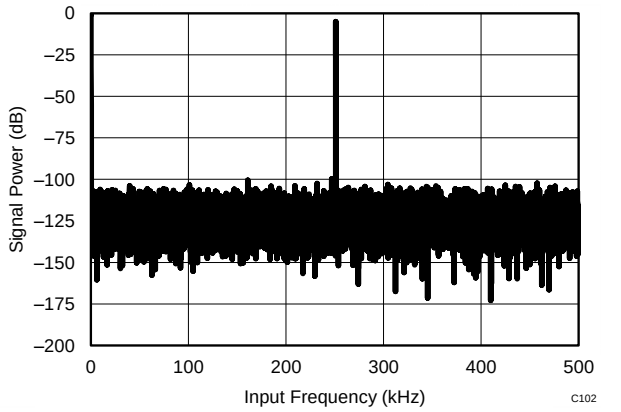


$f_{IN}$ = 250 kHz SNR = 73.2 dB THD = –88.2 dB
16-CLK interface

**Figure 53. Typical FFT**

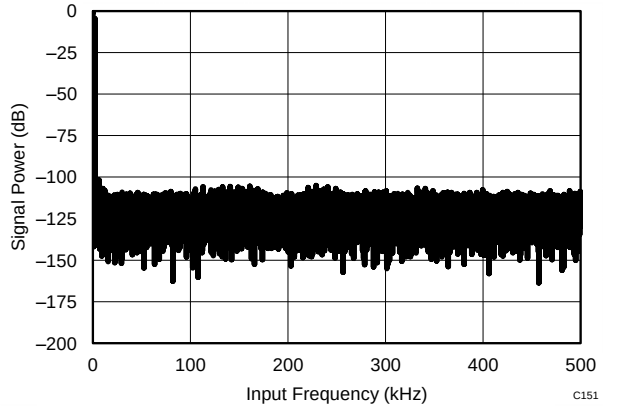


$f_{IN}$ = 2 kHz SNR = 73.7 dB THD = –92 dB
32-CLK interface

**Figure 54. Typical FFT**

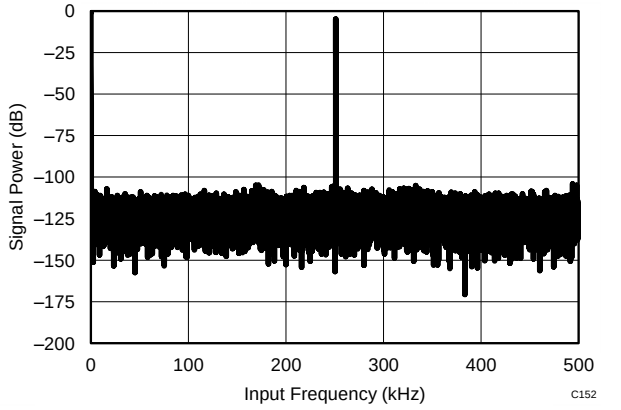


$f_{IN}$ = 250 kHz SNR = 73.6 dB THD = –88.3 dB
32-CLK interface

**Figure 55. Typical FFT**

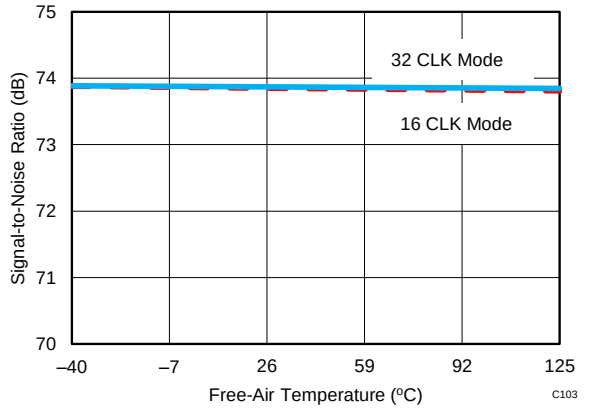


$f_{IN}$ = 2 kHz

**Figure 56. SNR vs Temperature**

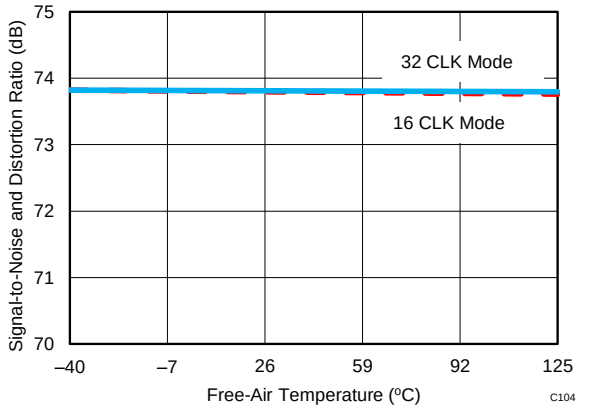


$f_{IN}$ = 2 kHz

**Figure 57. SINAD vs Temperature**


Copyright © 2013–2014, Texas Instruments Incorporated

## Typical Characteristics: ADS7254 (continued)

At $T_A$ = 25°C, AVDD = 5 V, DVDD = 3.3 V, $V_{REF}$ = 2.5 V (internal), and $f_{DATA}$ = 1 MSPS, unless otherwise noted.

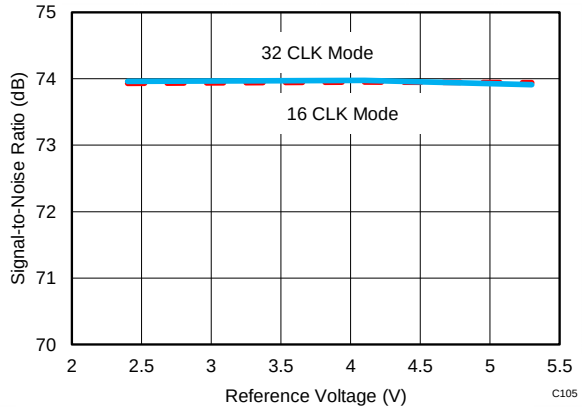


$f_{IN}$ = 2 kHz

**Figure 58. SNR vs Reference Voltage**

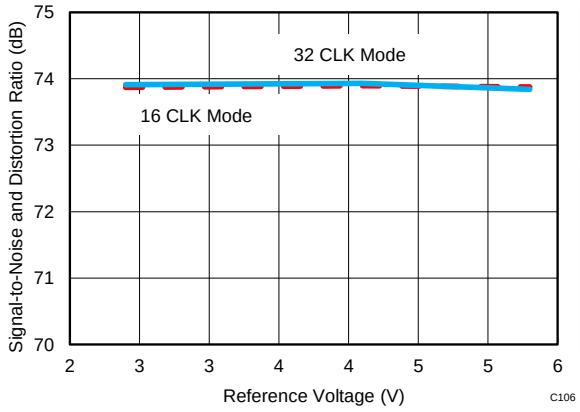


$f_{IN}$ = 2 kHz

**Figure 59. SINAD vs Reference Voltage**

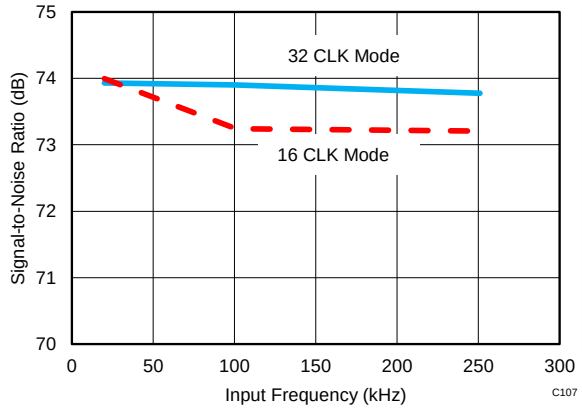


$V_{REF}$ = 5 V

**Figure 60. SNR vs Input Frequency**

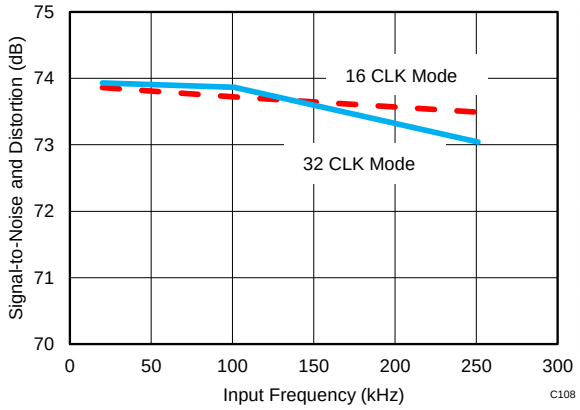


$V_{REF}$ = 5 V

**Figure 61. SINAD vs Input Frequency**

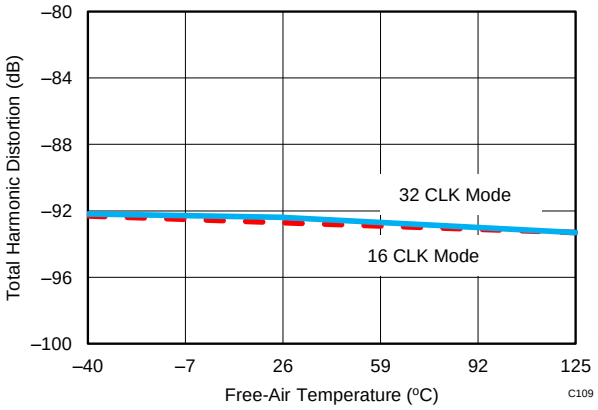


$f_{IN}$ = 2 kHz

**Figure 62. THD vs Temperature**

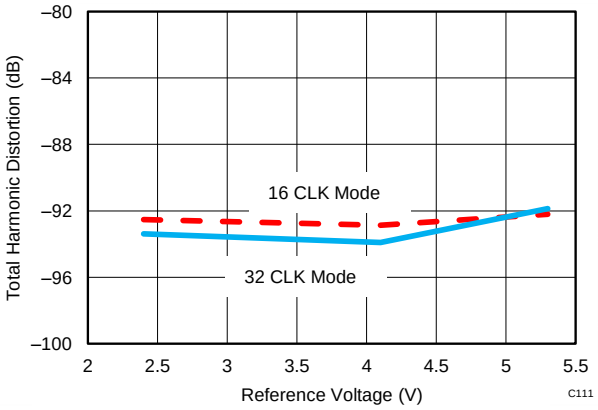


$f_{IN}$ = 2 kHz

**Figure 63. THD vs Reference Voltage**

## Typical Characteristics: ADS7254 (continued)

At $T_A$ = 25°C, AVDD = 5 V, DVDD = 3.3 V, $V_{REF}$ = 2.5 V (internal), and $f_{DATA}$ = 1 MSPS, unless otherwise noted.

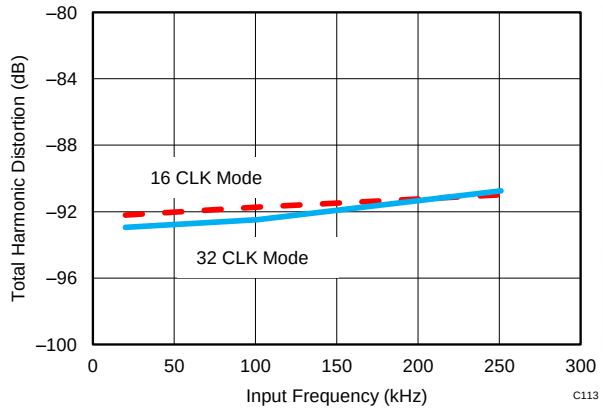


$V_{REF}$ = 5 V

**Figure 64. THD vs Input Frequency**

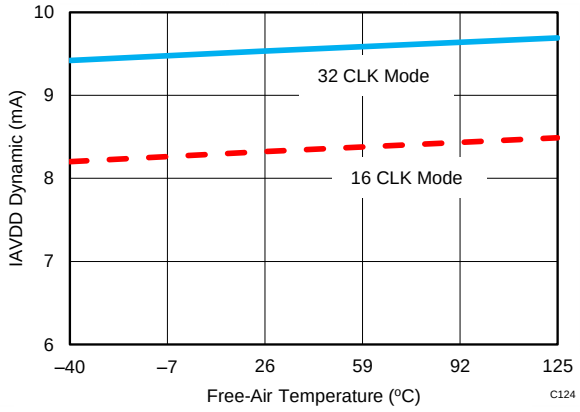


**Figure 65. Analog Supply Current vs Temperature**

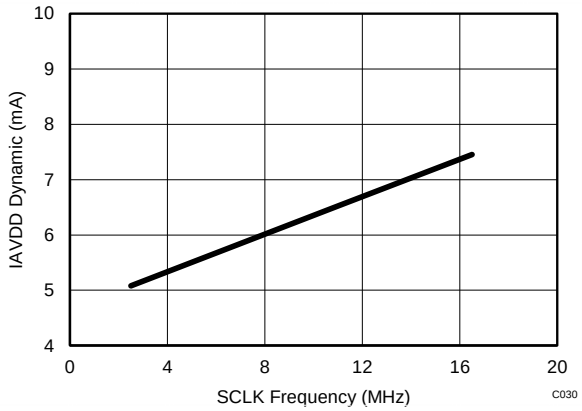


16-CLK interface

**Figure 66. Analog Supply Current vs SCLK Frequency**

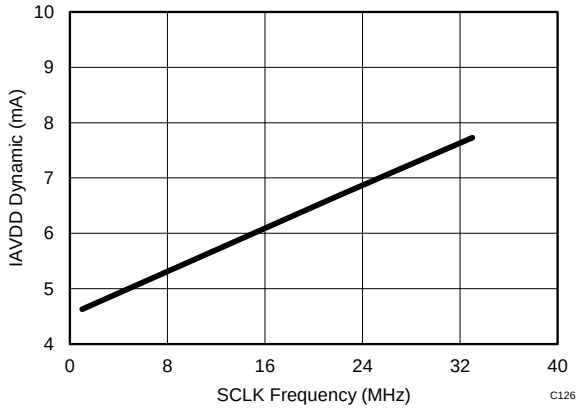


32-CLK interface

**Figure 67. Analog Supply Current vs SCLK Frequency**

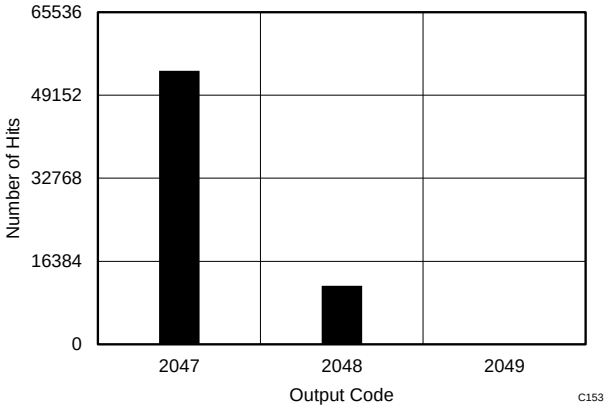


16-CLK interface 65536 data points $V_{IN-DIFF}$ = 0 V

**Figure 68. DC Histogram**

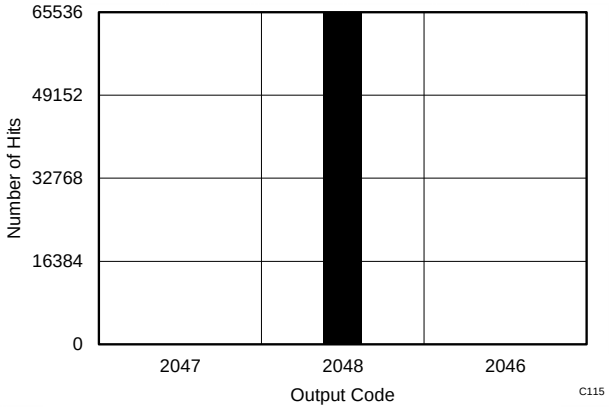


32-CLK interface 65536 data points $V_{IN-DIFF}$ = 0 V

**Figure 69. DC Histogram**


Copyright © 2013–2014, Texas Instruments Incorporated

## Typical Characteristics: ADS7254 (continued)

At $T_A$ = 25°C, AVDD = 5 V, DVDD = 3.3 V, $V_{REF}$ = 2.5 V (internal), and $f_{DATA}$ = 1 MSPS, unless otherwise noted.

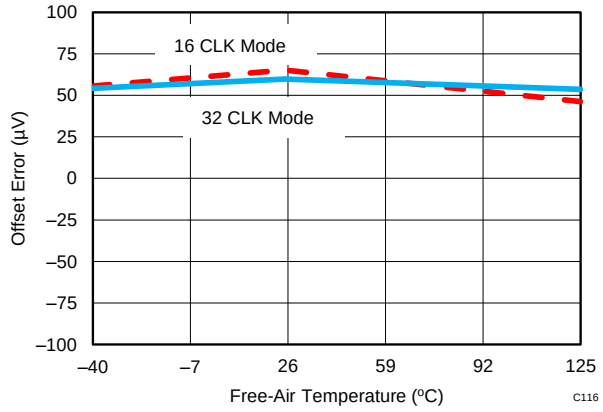


**Figure 70. Offset Error vs Temperature**

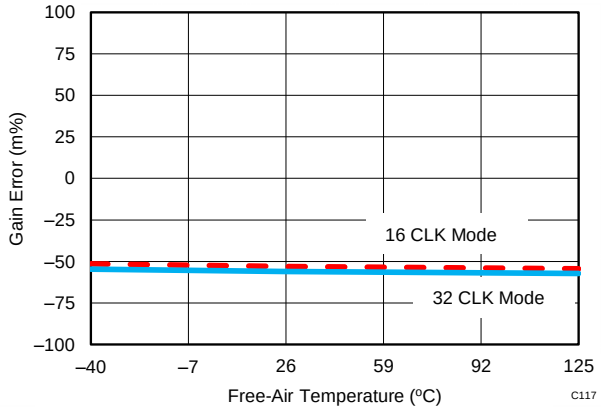


**Figure 71. Gain Error vs Temperature**

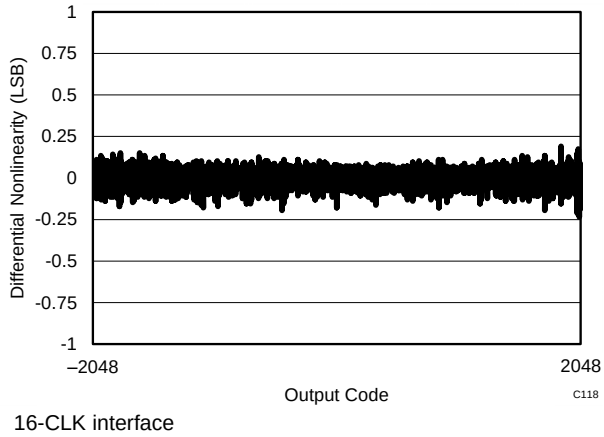


**Figure 72. Typical DNL**

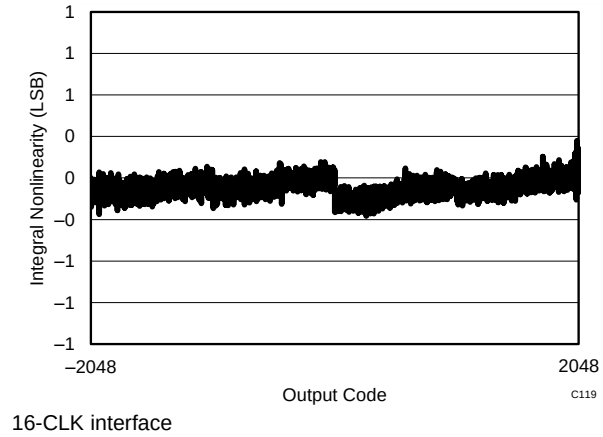


**Figure 73. Typical INL**

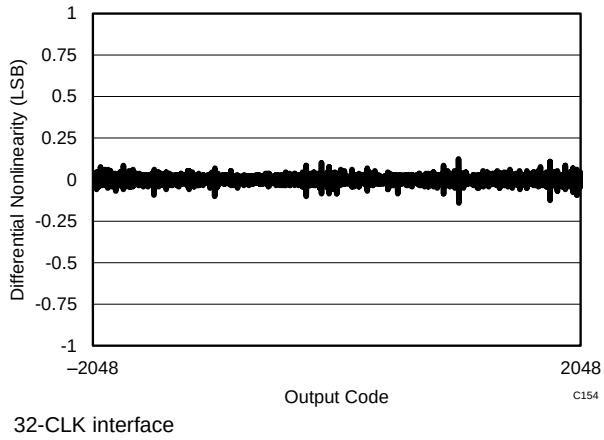


**Figure 74. Typical DNL**

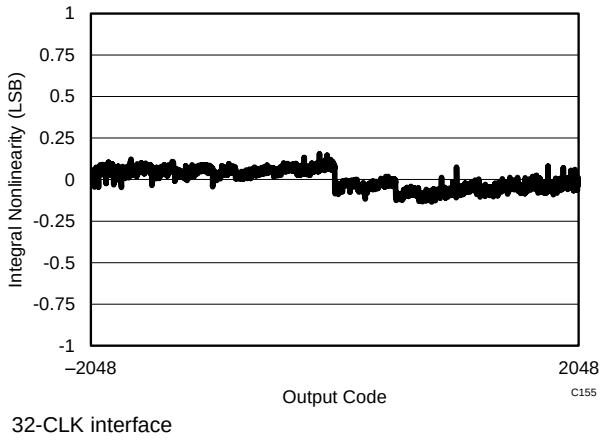


**Figure 75. Typical INL**

## Typical Characteristics: ADS7254 (continued)

At $T_A$ = 25°C, AVDD = 5 V, DVDD = 3.3 V, $V_{REF}$ = 2.5 V (internal), and $f_{DATA}$ = 1 MSPS, unless otherwise noted.

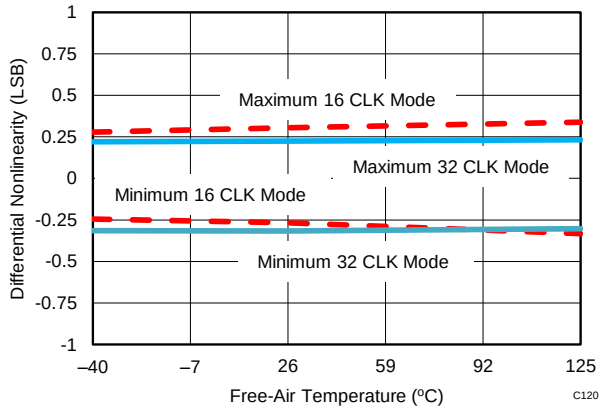


**Figure 76. DNL vs Temperature**

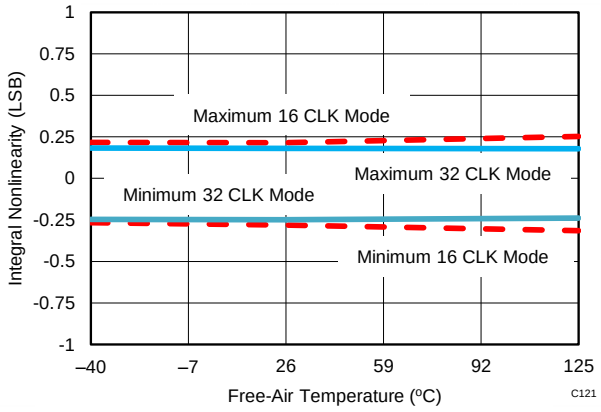


**Figure 77. INL vs Temperature**

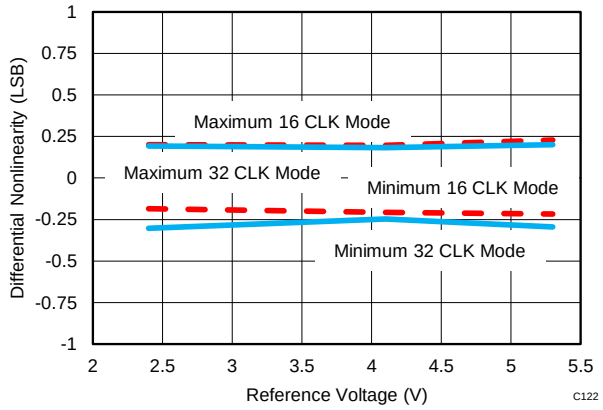


**Figure 78. DNL vs Reference Voltage**

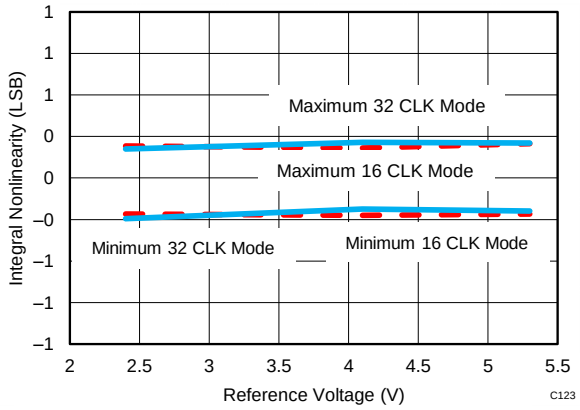


**Figure 79. INL vs Reference Voltage**


Copyright © 2013–2014, Texas Instruments Incorporated

## 7.14 Typical Characteristics: Common to ADS8354, ADS7854, and ADS7254

At $T_A$ = 25°C, AVDD = 5 V, DVDD = 3.3 V, $V_{REF}$ = 2.5 V (internal), and $f_{DATA}$ = maximum, unless otherwise noted.

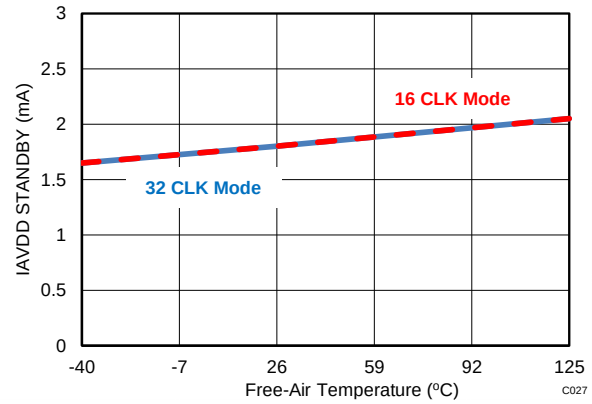


**Figure 80. STANDBY Current vs Temperature**

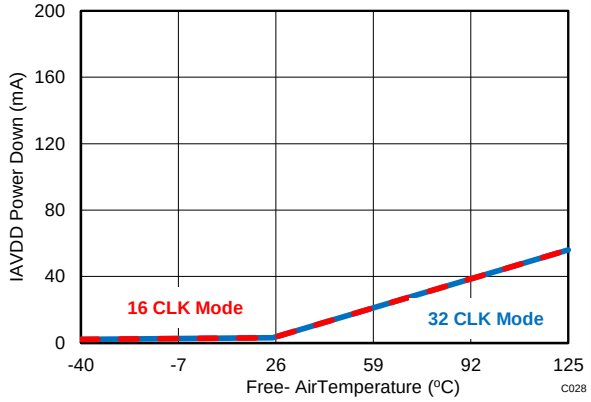


**Figure 81. Power-Down Current vs Temperature**

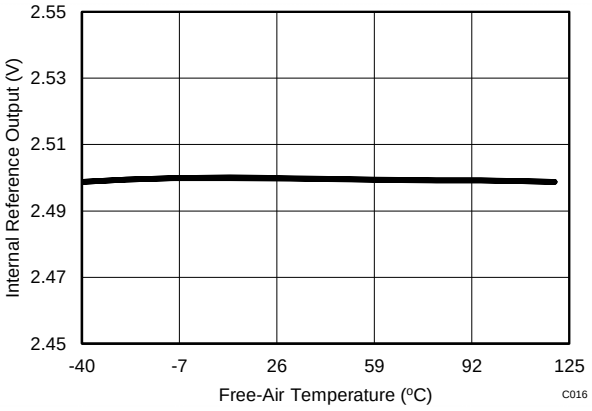


**Figure 82. Internal Reference Output vs Temperature**

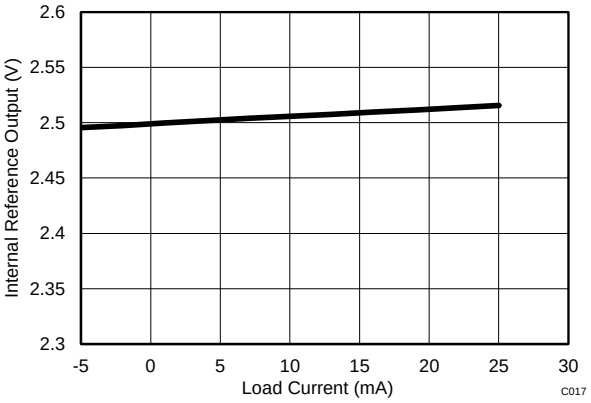


$R_{OUT}$ = 0.67 Ω

**Figure 83. Internal Reference Output Impedance**

# 8 Detailed Description

## 8.1 Overview

These devices belong to a family of pin-compatible, dual, high-speed, simultaneous-sampling, analog-to-digital converters (ADCs). The ADS8354, ADS7854, and ADS7254 support fully-differential input signals. The devices provide a simple, serial interface to the host controller and operate over a wide range of analog and digital power supplies.

These devices have two independently programmable internal references to achieve system-level gain error correction. The *Functional Block Diagram* section provides a functional block diagram of the device.

## 8.2 Functional Block Diagram

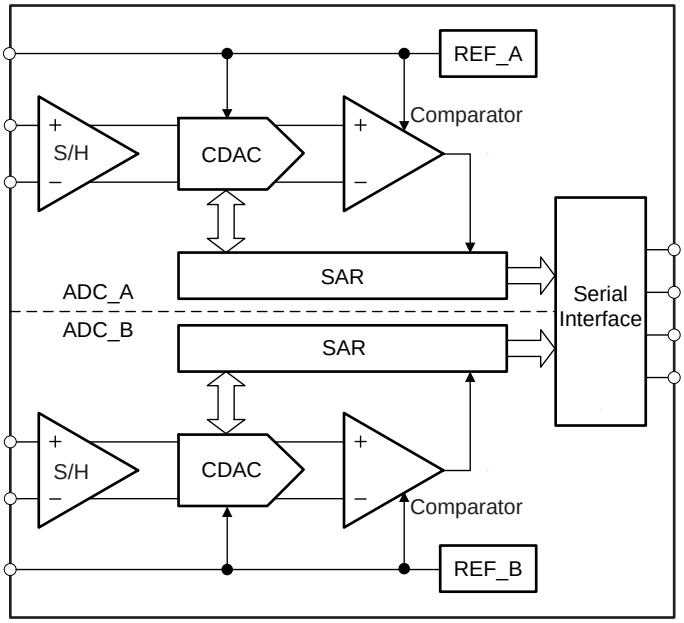



Copyright © 2013–2014, Texas Instruments Incorporated

## 8.3 Feature Description

### 8.3.1 Reference

The device has two simultaneous sampling ADCs (ADC_A and ADC_B). ADC_A and ADC_B operate with reference voltages $V_{REF_A}$ and $V_{REF_B}$ present on the REFIO_A and REFIO_B pins, respectively. The REFIO_A and REFIO_B pins should be decoupled with the REFGND_A and REFGND_B pins, respectively, with 10-µF decoupling capacitors.

The device supports operation either with an internal or external reference source, as shown in Figure 84. The reference voltage source is determined by setting bit 6 of the configuration register (CFR.B6). Note that this bit is common to ADC_A and ADC_B.

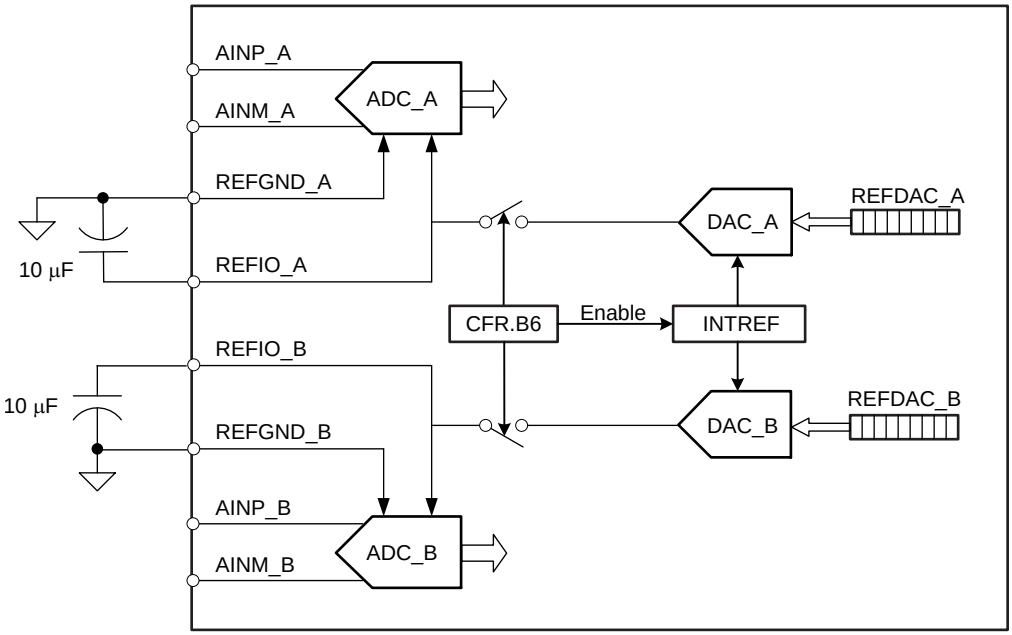


**Figure 84. Reference Configurations and Connections**

When CFR.B6 is 0, the device shuts down the internal reference source (INTREF) and ADC_A and ADC_B operate on external reference voltages provided by the user on the REFIO_A and REFIO_B pins, respectively.

When CFR.B6 is 1, the device operates with the internal reference source (INTREF) connected to REFIO_A and REFIO_B via DAC_A and DAC_B, respectively. In this configuration, $V_{REF_A}$ and $V_{REF_B}$ can be changed independently by writing to the respective user-programmable registers, REFDAC_A and REFDAC_B, respectively. Refer to the *REFDAC Registers (REFDAC_A and REFDAC_B)* section for more details.

## Feature Description (continued)

### 8.3.2 Analog Inputs

The ADS8354, ADS7854, and ADS7254 support fully-differential analog input signals on both ADC channels. These inputs are sampled and converted simultaneously by the two ADCs, ADC_A and ADC_B. ADC_A samples and converts ($V_{AINP_A} – V_{AINM_A}$), and ADC_B samples and converts ($V_{AINP_B} – V_{AINM_B}$).

Figure 85a and Figure 85b show equivalent circuits for the ADC_A and ADC_B analog input pins, respectively. Series resistance, $R_S$, represents the on-state sampling switch resistance (typically 50 Ω) and $C_{SAMPLE}$ is the device sampling capacitor (typically 40 pF).

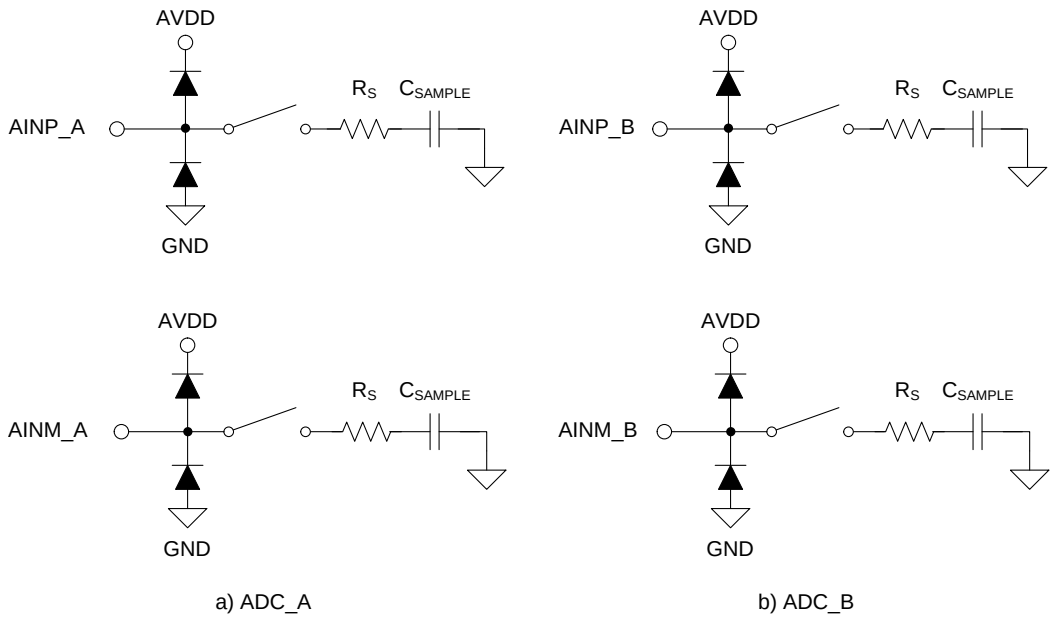


**Figure 85. Equivalent Circuit for the Analog Input Pins**

#### *8.3.2.1 Analog Input: Full-Scale Range Selection*

The full-scale range (FSR) supported at the analog inputs of the device is programmable with bit B9 of the configuration register (CFR.B9). This bit is common for both ADCs (ADC_A and ADC_B). The FSR is given by Equation 1 and Equation 2 :

For CFR.B9 = 0, FSR_ADC_A = $\pm V_{REF_A}$ and FSR_ADC_B = $\pm V_{REF_B}$ (1)

For CFR.B9 = 1, FSR_ADC_A = $\pm 2 \times V_{REF_A}$ and FSR_ADC_B = $\pm 2 \times V_{REF_B}$

where:

- $V_{REF_A}$ and $V_{REF_B}$ are the reference voltages going to ADC_A and ADC_B, respectively (as described in the *Reference* section). (2)

Therefore, with appropriate settings of the REFDAC_A and REFDAC_B registers and CFR.B9, the maximum dynamic range of the ADC can be used.

Note that while using CFR.B9 set to 1, care must be taken so that the ADC analog supply (AVDD) is as in Equation 3 and Equation 4:

$2 \times V_{REF_A} \leq AVDD \leq AVDD(max)$ (3)

$2 \times V_{REF_B} \leq AVDD \leq AVDD(max)$ (4)


Copyright © 2013–2014, Texas Instruments Incorporated

## Feature Description (continued)

### *8.3.2.2 Analog Input: Common-Mode Voltage Range*

The ADS8354, ADS7854, and ADS7254 support fully-differential input signals. Equation 5 and Equation 6 provide the common-mode voltage for the ADC_A and ADC_B differential inputs.

$$V_{CM_A} = FSR_ADC_A / 2 \quad (5)$$

$$V_{CM_B} = FSR_ADC_B / 2 \quad (6)$$

The various input configurations supported by the device are shown in Table 1.

**Table 1. Input Configurations**

| INPUT RANGE SELECTION | INPUT COMMON-MODE RANGE | CONNECTION DIAGRAM |
|---|---|---|
| CFR.B9 = 0<br>(FSR_ADC_A = $\pm V_{REF_A}$)<br>(FSR_ADC_B = $\pm V_{REF_B}$) | $V_{CM_A} = \left[\frac{V_{REF_A}}{2}\right] \pm 0.1\ V$<br>$V_{CM_B} = \left[\frac{V_{REF_B}}{2}\right] \pm 0.1\ V$ | 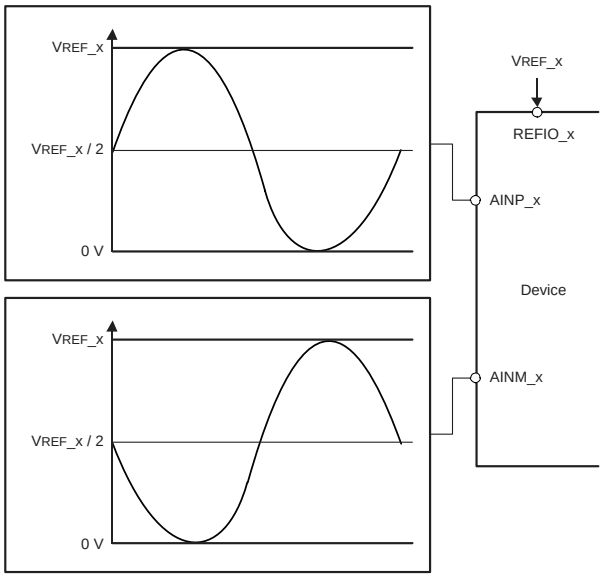 |
| CFR.B9 = 1<br>(FSR_ADC_A = $\pm 2 \times V_{REF_A}$)<br>(FSR_ADC_B = $\pm 2 \times V_{REF_B}$) | $V_{CM_A} = V_{REF_A} \pm 0.1\ V$<br>$V_{CM_B} = V_{REF_B} \pm 0.1\ V$ | 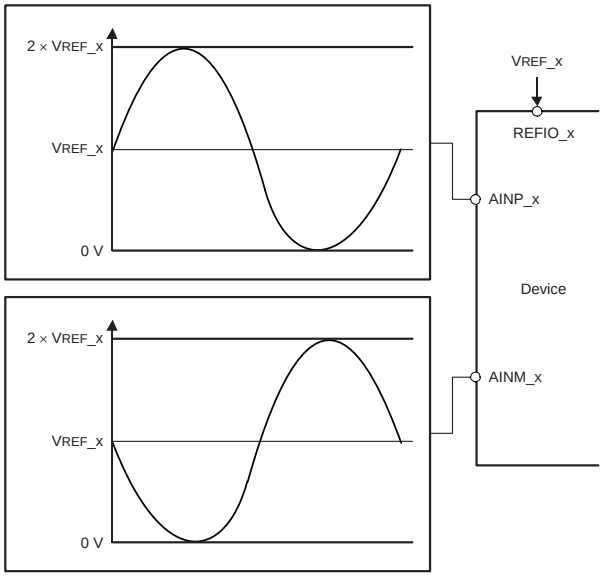 |

### 8.3.3 Transfer Function

The device output is in twos compliment format. Device resolution for a fully-differential input is calculated by Equation 7:

$$1\ \text{LSB} = (2 \times \text{FSR_ADC_x}) / (2^N) \quad (7)$$

where:

- N = 16 (ADS8354), 14 (ADS7854), or 12 (ADS7254)
- FSR_ADC_x is the full-scale input range of the ADC (refer to the *Analog Input* section for more details)

Table 2 shows the different input voltages and the corresponding output codes from the device.

**Table 2. Transfer Characteristics**

| INPUT VOLTAGE (AINP_x – AINM_x), ±$V_{REF}$ RANGE | INPUT VOLTAGE (AINP_x – AINM_x), ±2 × $V_{REF}$ RANGE | INPUT VOLTAGE | OUTPUT CODE (Hex) | | | |
|---|---|---|---|---|---|---|
| | | | CODE | ADS8354 | ADS7854 | ADS7254 |
| < – $V_{REF_x}$ | < –2 × $V_{REF_x}$ | NFSC | NFSC | 8000 | 2000 | 800 |
| –$V_{REF_x}$ + 1 LSB | –2 × $V_{REF_x}$ + 1 LSB | NFSR | NFSC + 1 | 8001 | 2001 | 801 |
| –1 LSB | –1 LSB | –1 LSB | MC | FFFF | 3FFF | FFF |
| 0 | 0 | 0 | PLC | 0000 | 0000 | 000 |
| > $V_{REF_x}$ – 1 LSB | > 2 × $V_{REF_x}$ – 1 LSB | PFSR – 1 LSB | PFSC | 7FFF | 1FFF | 7FF |

Figure 86 shows the ideal transfer characteristics for the device.

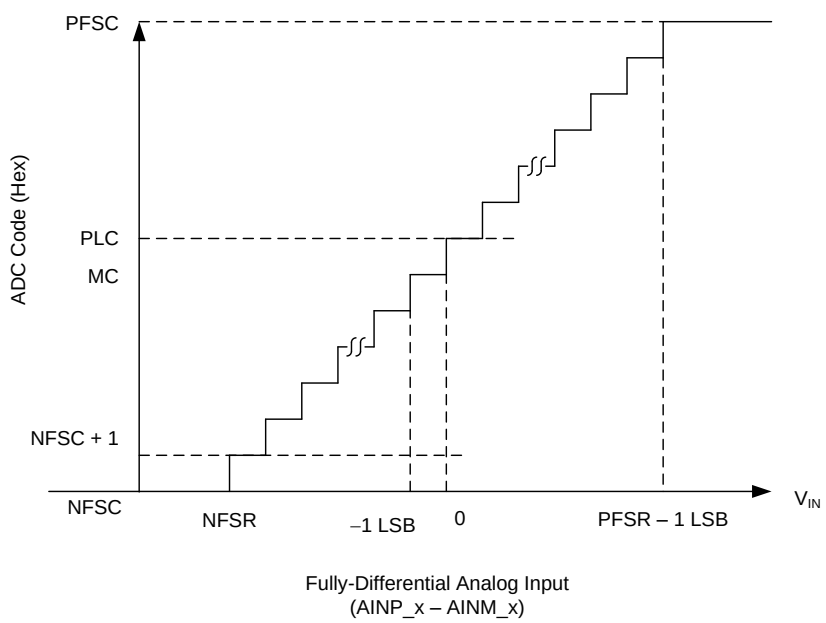


**Figure 86. Ideal Transfer Characteristics for a Fully-Differential Analog Input**


Copyright © 2013–2014, Texas Instruments Incorporated

## 8.4 Device Functional Modes

The device provides three user-programmable registers: the configuration register (CFR), the REFDAC_A register, and the REFDAC_B register. These registers support write (refer to the *Write to User Programmable Registers* section) and readback (refer to the *Reading User-Programmable Registers* section) operations and allow the user to customize ADC behavior for specific application requirements.

The device supports four interface modes (refer to the *Conversion Data Read* section), two low-power modes (refer to the *Low-Power Modes* section), and short-cycling/reconversion feature (refer to the *Frame Abort, Reconversion, or Short-Cycling* section).

## 8.5 Register Maps and Serial Interface

### 8.5.1 Serial Interface

The device uses the serial clock (SCLK) for synchronizing data transfers in and out of the device.

The $\overline{CS}$ signal defines one conversion and serial transfer frame. A frame starts with a $\overline{CS}$ falling edge and ends with a $\overline{CS}$ rising edge. Between the start and end of the frame, a minimum of *N* SCLK falling edges must be provided to validate the read or write operation. As shown in Table 3, *N* depends upon the interface mode used to read the conversion result. When *N* SCLK falling edges are provided, the write operation attempted in the frame is validated and the internal user-programmable registers are updated on the subsequent $\overline{CS}$ rising edge. This $\overline{CS}$ rising edge also ends the frame.

**Table 3. SCLK Falling Edges for a Valid Write Operation**

| INTERFACE MODE | MINIMUM SCLK FALLING EDGES REQUIRED TO VALIDATE WRITE OPERATION *N* |
|---|---|
| 32-CLK, dual-SDO mode (default). See the *32-CLK, Dual-SDO Mode* section. | 32 |
| 32-CLK, single-SDO mode. See the *32-CLK, Single-SDO Mode* section. | 48 |
| 16-CLK, dual-SDO mode. See the *16-CLK, Dual-SDO Mode* section. | 16 |
| 16-CLK, single SDO mode. See the *16-CLK, Single SDO Mode* section. | 32 |

If $\overline{CS}$ is brought high before providing *N* SCLK falling edges, the write operation attempted in the frame is not valid. Refer to the *Frame Abort, Reconversion, or Short-Cycling* section for more details.

### 8.5.2 Write to User Programmable Registers

The device features three user-programmable registers: the configuration register (CFR), the REFDAC_A register, and the REFDAC_B register. These registers can be written with the device SDI pin. The first 16 bits of data on SDI are latched into the device on the first 16 SCLK falling edges. However, the new configuration takes effect only when the read or write operation is validated. If these registers are not required to update, SDI must remain low during the respective frames.

The first four SDI data bits (B[15:12]) determine what operation is performed (that is, either a read or write operation or no operation), which register address the operation uses, and the function of the next 12 SDI data bits (B[11:0]). Table 4 lists the various combinations supported for B[15:12].

**Table 4. Data Write Operation**

| B15 | B14 | B13 | B12 | OPERATION | FUNCTION OF BITS B[11:0] |
|---|---|---|---|---|---|
| 0 | 0 | 0 | 0 | No operation is performed | These bits are ignored |
| 0 | 0 | 0 | 1 | REFDAC_A read | 000h; see the *Reading User-Programmable Registers* section |
| 0 | 0 | 1 | 0 | REFDAC_B read | 000h; see the *Reading User-Programmable Registers* section |
| 0 | 0 | 1 | 1 | CFR read | 000h; see the *Reading User-Programmable Registers* section |
| 1 | 0 | 0 | 0 | CFR write | See the *Configuration Register (CFR)* section |
| 1 | 0 | 0 | 1 | REFDAC_A write | See the *REFDAC_A* section |
| 1 | 0 | 1 | 0 | REFDAC_B write | See the *REFDAC_B* section |
| 1 | 0 | 1 | 1 | No operation is performed | These bits are ignored |
| X | 1 | X | X | No operation is performed | These bits are ignored |

Copyright © 2013–2014, Texas Instruments Incorporated

#### 8.5.2.1 Configuration Register (CFR)

The device operation configuration is controlled by the configuration register (CFR) status. Data written into the CFR in a valid frame (F) determine the device configuration for frame (F+1). The bit functions are outlined in Figure 87. On power-up, all bits in the CFR default to 0.

**Figure 87. CFR Bit Functions**

| 15 | 14 | 13 | 12 | 11 | 10 | 9 | 8 |
|---|---|---|---|---|---|---|---|
| WRITE/READ | 0 | ADDR1 | ADDR0 | RD_CLK_ MODE | RD_DATA_ LINES | INPUT_RANGE | 0 |
| 7 | 6 | 5 | 4 | 3 | 2 | 1 | 0 |
| 0 | REF_SEL | STANDBY | 0 | 0 | 0 | 0 | 0 |

**Table 5. Configuration Register (CFR) Field Descriptions**

| Bit | Field | Type | Reset | Description |
|---|---|---|---|---|
| 15 | WRITE/READ | W | 0h | These bits select the user-programmable register.<br>1000 = Select this combination to write to the CFR register and to enable bits 11:0 |
| 14 | 0 | R/W | 0h | |
| 13 | ADDR1 | R/W | 0h | |
| 12 | ADDR0 | R/W | 0h | |
| 11 | RD_CLK_MODE | R/W | 0h | This bit provides clock mode selection for the serial interface.<br>0 = Selects 32-CLK mode (default)<br>1 = Selects 16-CLK mode<br>(Note that the ADS8354 only supports 32-CLK mode. This bit is ignored for the ADS8354.) |
| 10 | RD_DATA_LINES | R/W | 0h | This bit provides data line selection for the serial interface.<br>0 = Use SDO_A to output ADC_A data and SDO_B to output of ADC_B data (default)<br>1 = Use only SDO_A to output of ADC_A data followed by ADC_B data |
| 9 | INPUT_RANGE | R/W | 0h | This bit selects the maximum input range for the ADC as a function of the reference voltage provided to the ADC. See the *Analog Inputs* section for more details.<br>0 = FSR equals $\pm V_{REF}$<br>1 = FSR equals $\pm 2 \times V_{REF}$ |
| 8:7 | 0 | R/W | 0h | This bit must be set to 0 (default) |
| 6 | REF_SEL | R/W | 0h | This bit selects the ADC reference voltage source. Refer to the *Reference* section for more details.<br>0 = Use external reference (default)<br>1 = Use internal reference |
| 5 | STANDBY | W | 0h | This bit is used by the device to enter or exit STANDBY mode. Refer to the *STANDBY Mode* section for more details. |
| 4 | 0 | R/W | 0h | This bit must be set to 0 (default) |
| 3:0 | 0 | R/W | 0h | These bits must be set to 0 (default) |


Copyright © 2013–2014, Texas Instruments Incorporated

#### 8.5.2.2 REFDAC Registers (REFDAC_A and REFDAC_B)

The REFDAC registers, bit functions, and resolution information are described in this section.

**Figure 88. REFDAC_X Bit Functions**

| 15 | 14 | 13 | 12 | 11 | 10 | 9 | 8 |
|---|---|---|---|---|---|---|---|
| WRITE/READ | 0 | ADDR1 | ADDR0 | D8 | D7 | D6 | D5 |
| 7 | 6 | 5 | 4 | 3 | 2 | 1 | 0 |
| D4 | D3 | D2 | D1 | D0 | 0 | 0 | 0 |

**Table 6. REFDAC Registers Field Descriptions**

| Bit | Field | Type | Reset | Description |
|---|---|---|---|---|
| 15 | WRITE/READ | W | 0h | These bits select the configurable register address.<br>1001 = Select this combination to write to the REFDAC_A register<br>1010 = Select this combination to write to the REFDAC_B register |
| 14 | 0 | R/W | 0h | |
| 13 | ADDR1 | R/W | 0h | |
| 12 | ADDR0 | R/W | 0h | |
| 11:3 | D[8:0] | R/W | 0h | Data to program the individual DAC output voltage.<br>Note: These bits are valid only for bits 15:12 = 1001 or bits 15:12 = 1010.<br>Table 7 shows the relationship between the REFDAC_x programmed value and the DAC_x output voltage. |
| 2:0 | 0 | R/W | 0h | This bit must be set to 0 (default) |

**Table 7. REFDAC Settings**

| REFDAC_x VALUE (Bits 11:3 in Hex) | B[2:0] | Typical DAC_x OUPTUT VOLTAGE (V)(1) |
|---|---|---|
| 1FF (default) | 000 | 2.5000 |
| 1FE | 000 | 2.4989 |
| 1FD | 000 | 2.4978 |
| — | — | — |
| 1D7 | 000 | 2.45 |
| — | — | — |
| 1AE | 000 | 2.40 |
| — | — | — |
| 186 | 000 | 2.35 |
| — | — | — |
| 15D | 000 | 2.30 |
| — | — | — |
| 134 | 000 | 2.25 |
| — | — | — |
| 10C | 000 | 2.20 |
| — | — | — |
| 0E3 | 000 | 2.15 |
| — | — | — |
| 0BA | 000 | 2.10 |
| — | — | — |
| 091 | 000 | 2.05 |
| — | — | — |
| 069 | 000 | 2.00 |
| — | — | — |
| 064 to 000 | 000 | Do not use |

(1) Actual output voltage may vary by a few millivolts from the specified value. To obtain the desired output voltage, TI recommends starting with the specified register setting and then experimenting with five codes on either side of the specified register setting.

### 8.5.3 Data Read Operation

The device supports two types of read operations: reading user-programmable registers and reading conversion results.

#### *8.5.3.1 Reading User-Programmable Registers*

The device supports a readback option for all user-programmable registers: CFR, REFDAC_A, and REFDAC_B. Figure 89 shows a detailed timing diagram for this operation.

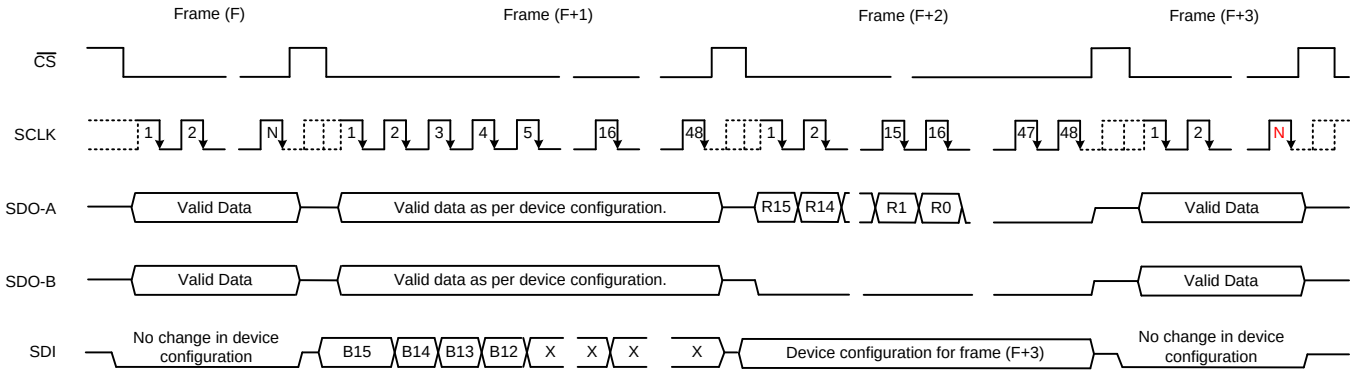


Note that *N* is a function of the device configuration, as described in Table 3.

**Figure 89. Register Readback Timing**

To readback the user-programmable register settings, the appropriate control word should be transmitted to the device during frame (F+1), as shown in Table 8. Frame (F+1) must have at least 48 SCLK falling edges.

**Table 8. Control Word to Readback User-Programmable Registers**

| USER-PROGRAMMABLE REGISTER | CONTROL WORD TO BE PROGRAMMED IN FRAME (F+1) | |
|---|---|---|
| | B[15:12] (Binary) | B[11:0] (Hex) |
| CFR | 0011b | 000h |
| REFDAC_A | 0001b | 000h |
| REFDAC_B | 0010b | 000h |

Frame (F+2) must have at least 48 SCLK falling edges. During frame (F+2), SDO_A outputs the contents of the selected user-programmable register on the first 16 SCLK falling edges (as shown in Table 9) and then outputs 0s for any subsequent SCLK falling edges. The SDO_B pin outputs 0s for all the SCLK falling edges.

**Table 9. Register Data Read Back**

| USER-PROGRAMMABLE REGISTER | DATA READ ON SDO-A IN FRAME (F+2) | | | | | | | | | |
|---|---|---|---|---|---|---|---|---|---|---|
| | R15 | R14 | R13 | R12 | R11 | — | R3 | R2 | R1 | R0 |
| CFR | 0 | 0 | 1 | 1 | CFG.B11 | — | CFG.B3 | CFG.B2 | CFG.B1 | CFG.B0 |
| REFDAC_A | 0 | 0 | 0 | 1 | REFDAC_A.D8 | — | REFDAC_A.D0 | 0 | 0 | 0 |
| REFDAC_B | 0 | 0 | 1 | 0 | REFDAC_B.D8 | — | REFDAC_B.D0 | 0 | 0 | 0 |

Register settings programmed during frame (F+2) determine the device configuration in frame (F+3).


Copyright © 2013–2014, Texas Instruments Incorporated

#### 8.5.3.2 Conversion Data Read

The device provides four different interface modes to the user for reading the conversion result. These modes offer flexible hardware connections and firmware programming. Table 10 shows how to select one of the four interface modes.

**Table 10. Interface Mode Selection**

| CFR.B11 | CFR.B10 | INTERFACE MODE | MINIMUM SCLK FALLING EDGES REQUIRED TO VALIDATE WRITE OPERATION *N* |
|---|---|---|---|
| 0 | 0 | 32-CLK, dual-SDO mode (default) | 32 |
| 0 | 1 | 32-CLK, single-SDO mode | 48 |
| 1 | 0 | 16-CLK, dual-SDO mode | 16 |
| 1 | 1 | 16-CLK, single SDO mode | 32 |

In the 32-CLK interface modes, the device uses an internal clock to convert the sampled analog signal. The conversion is completed during the first 16 periods of SCLK and the conversion result can be read on the subsequent SCLK falling edges. All devices in the family (that is, ADS8354, ADS7854, and ADS7254) support the 32-CLK interface modes.

In addition to the 32-CLK interface modes, the ADS7854 and ADS7254 also support the 16-CLK interface modes. By using the 16-CLK interface modes, the same throughput can be achieved at much lower SCLK speeds.

The following sections detail the various interface modes supported by the device.

##### 8.5.3.2.1 32-CLK, Dual-SDO Mode (CFR.B11 = 0, CFR.B10 = 0, Default)

The 32-CLK, dual-SDO mode is the default mode supported by all devices. This mode can also be selected by writing CFR.B11 = 0 and CFR.B10 = 0.

In this mode, the SDO_A pin outputs the ADC_A conversion result and the SDO_B pin outputs the ADC_B conversion result. Figure 90 shows a detailed timing diagram for this mode.

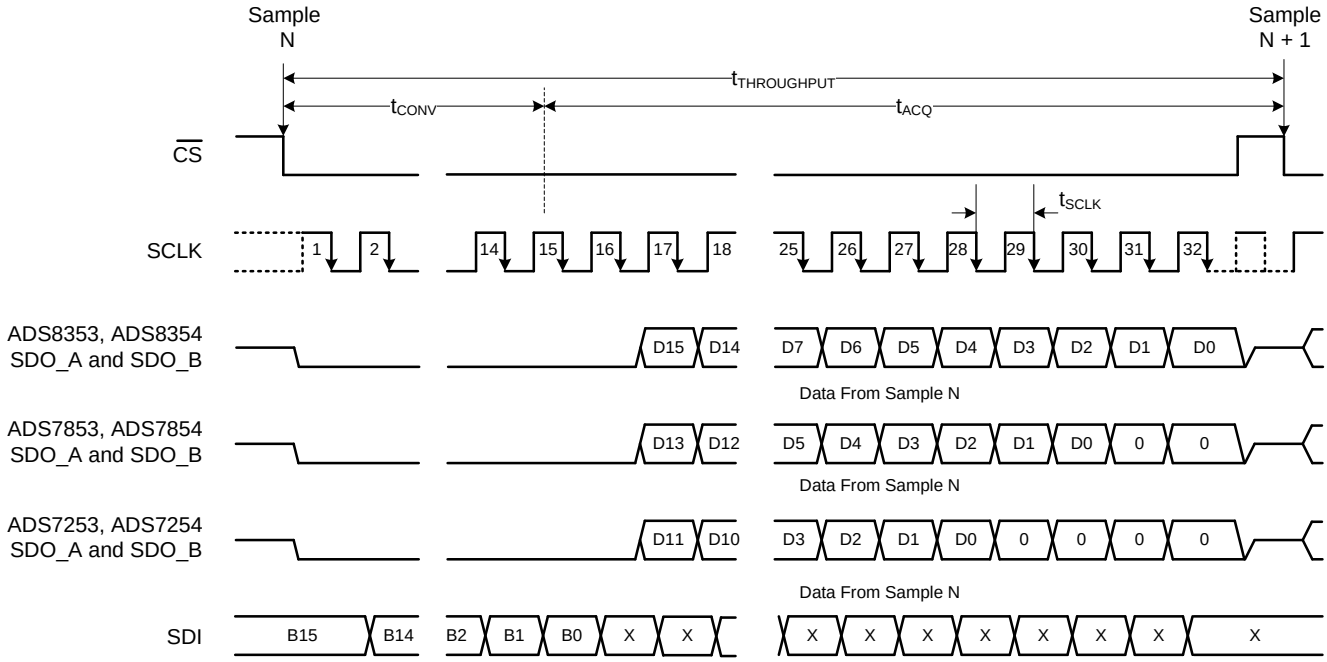


**Figure 90. 32-CLK, Dual-SDO Mode Timing Diagram**

A $\overline{CS}$ falling edge brings the serial data bus out of 3-state and also outputs a 0 on the SDO_A and SDO_B pins. The device converts the sampled analog input during the conversion time ($t_{CONV}$). SDO_A and SDO_B read 0 during this period. After completing the conversion process, the sample-and-hold circuit returns to sample mode. The device outputs the MSBs of ADC_A and ADC_B on SDO_A and SDO_B pins, respectively, on the 16th SCLK falling edge. The subsequent SCLK falling edges are used to shift out the rest of the bits of the conversion result, as shown in Table 11.

**Table 11. Data Launch Edge**

| DEVICE | PINS | LAUNCH EDGE | | | | | | | | | | | | |
|---|---|---|---|---|---|---|---|---|---|---|---|---|---|---|
| | | $\overline{CS}$ | SCLK | | | | | | | | | | | $\overline{CS}$ |
| | | ↓ | ↓1 | — | ↓15 | ↓16 | — | ↓27 | ↓28 | ↓29 | ↓30 | ↓31 | ↓32 ... | ↑ |
| ADS8354 | SDO-A | 0 | 0 | — | 0 | D15_A | — | D4_A | D3_A | D2_A | D1_A | D0_A | 0 ... | Hi-Z |
| | SDO-B | 0 | 0 | — | 0 | D15_B | — | D4_B | D3_B | D2_B | D1_B | D0_B | 0 ... | Hi-Z |
| ADS7854 | SDO-A | 0 | 0 | — | 0 | D13_A | — | D2_A | D1_A | D0_A | 0 | 0 | 0 ... | Hi-Z |
| | SDO-B | 0 | 0 | — | 0 | D13_B | — | D2_B | D1_B | D0_B | 0 | 0 | 0 ... | Hi-Z |
| ADS7254 | SDO-A | 0 | 0 | — | 0 | D11_A | — | D0_A | 0 | 0 | 0 | 0 | 0 ... | Hi-Z |
| | SDO-B | 0 | 0 | — | 0 | D11_B | — | D0_B | 0 | 0 | 0 | 0 | 0 ... | Hi-Z |

In this mode, at least 32 SCLK falling edges must be given to validate the read or write frame. A $\overline{CS}$ rising edge ends the frame and puts the serial bus into 3-state.

Refer to Table 12 for timing specifications specific to this serial interface mode.

**Table 12. 32-CLK, Dual-SDO Interface Specific Timing**

| PARAMETER | | TEST CONDITIONS | MIN | TYP | MAX | UNIT |
|---|---|---|---|---|---|---|
| **TIMING REQUIREMENTS** | | | | | | |
| $t_{CLK}$ | CLOCK period | ADS8354 | 41.66 | | | ns |
| | | ADS7854 | 29.4 | | | ns |
| | | ADS7254 | 29.4 | | | ns |
| $t_{ACQ}$ | Acquisition time | | | $33 \times t_{CLK} - t_{CONV}$ | | ns |
| **TIMING SPECIFICATIONS** | | | | | | |
| $t_{CONV}$ | Conversion time | ADS8354 | | | 640 | ns |
| | | ADS7854 | | | 450 | ns |
| | | ADS7254 | | | 450 | ns |


Copyright © 2013–2014, Texas Instruments Incorporated

#### 8.5.3.2.2 32-CLK, Single-SDO Mode (CFR.B11 = 0, CFR.B10 = 1)

The 32-CLK, single-SDO mode provides the option of using only one SDO pin (SDO_A) to read conversion results from both ADCs (ADC_A and ADC_B). SDO_B remains in 3-state and can be treated as a no connect (NC) pin.

This mode can be selected by writing CFR.B11 = 0 and CFR.B10 = 1. Figure 91 shows a detailed timing diagram for this mode.

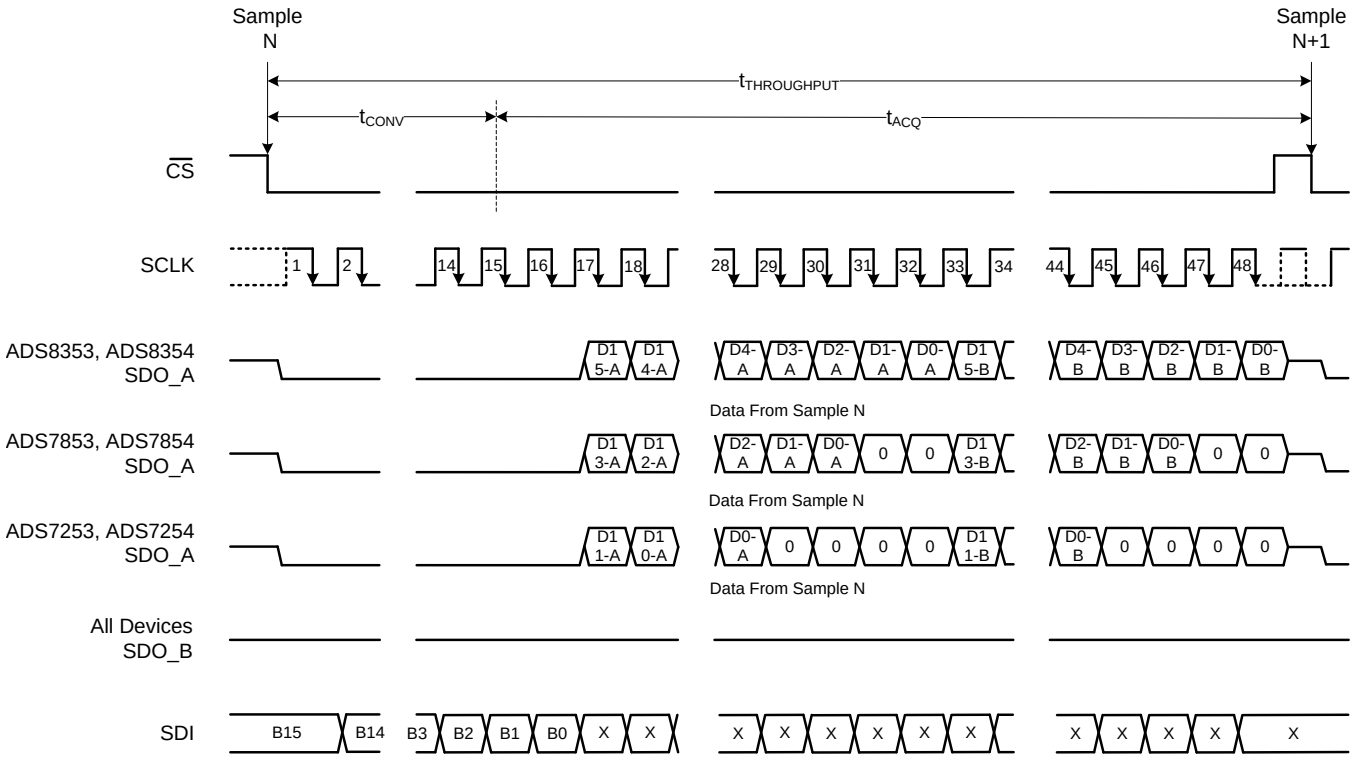


**Figure 91. 32-CLK, Single-SDO Mode Timing Diagram**

A $\overline{CS}$ falling edge brings the serial data bus out of 3-state and also outputs a 0 on the SDO_A pin. The device converts the sampled analog input during the conversion time ($t_{CONV}$). SDO_A reads 0 during this period. After competing the conversion process, the sample-and-hold circuit goes back into sample mode. The device outputs the MSB of ADC_A on the SDO_A pin on the 16th SCLK falling edge. The subsequent SCLK falling edges are used to shift out the conversion result of ADC_A followed by the conversion result of ADC_B on the SDO_A pin, as shown in Table 13.

**Table 13. Data Launch Edge**

| DEVICE | PIN | LAUNCH EDGE | | | | | | | | | | | | | | | | | | | |
|---|---|---|---|---|---|---|---|---|---|---|---|---|---|---|---|---|---|---|---|---|---|
| | | $\overline{CS}$ | SCLK | | | | | | | | | | | | | | | | | | $\overline{CS}$ |
| | | ↓ | ↓1 | — | ↓15 | ↓16 | — | ↓27 | ↓28 | ↓29 | ↓30 | ↓31 | ↓32 | — | ↓43 | ↓44 | ↓45 | ↓46 | ↓47 | ↓48 ... | ↑ |
| ADS8354 | SDO-A | 0 | 0 | — | 0 | D15_A | — | D4_A | D3_A | D2_A | D1_A | D0_A | D15_B | — | D4_B | D3_B | D2_B | D1_B | D0_B | 0 ... | Hi-Z |
| ADS7854 | SDO-A | 0 | 0 | — | 0 | D13_A | — | D2_A | D1_A | D0_A | 0 | 0 | 0 | — | D2_B | D1_B | D0_B | 0 | 0 | 0 ... | Hi-Z |
| ADS7254 | SDO-A | 0 | 0 | — | 0 | D11_A | — | D0_A | 0 | 0 | 0 | 0 | 0 | — | D0_B | 0 | 0 | 0 | 0 | 0 ... | Hi-Z |

In this mode, at least 48 SCLK falling edges must be given to validate the read or write frame. A $\overline{CS}$ rising edge ends the frame and puts the serial bus into 3-state.

Refer to Table 14 for timing specifications specific to this serial interface mode.

**Table 14. 32-CLK, Single-SDO Interface Specific Timing**

| PARAMETER | | TEST CONDITIONS | MIN | TYP | MAX | UNIT |
|---|---|---|---|---|---|---|
| **TIMING REQUIREMENTS** | | | | | | |
| $t_{CLK}$ | CLOCK period | ADS8354 | 41.66 | | | ns |
| | | ADS7854 | 29.4 | | | ns |
| | | ADS7254 | 29.4 | | | ns |
| $t_{ACQ}$ | Acquisition time | | $49 \times t_{CLK} - t_{CONV}$ | | | ns |
| **TIMING SPECIFICATIONS** | | | | | | |
| $t_{CONV}$ | Conversion time | ADS8354 | | | 640 | ns |
| | | ADS7854 | | | 450 | ns |
| | | ADS7254 | | | 450 | ns |

#### 8.5.3.2.3 16-CLK, Dual-SDO Mode (CFR.B11 = 1, CFR.B10 = 0)

The 16-CLK, dual-SDO mode is designed to support the maximum throughput at lower SCLK frequencies. This interface mode is not supported by the ADS8354.

For the ADS7854 and ADS7254, this interface mode can be selected by writing CFR.B11 = 1 and CFR.B10 = 0. In this mode, the SDO_A pin outputs the ADC_A conversion result and the SDO_B pin outputs the ADC_B conversion result. Figure 92 shows a detailed timing diagram for this mode.

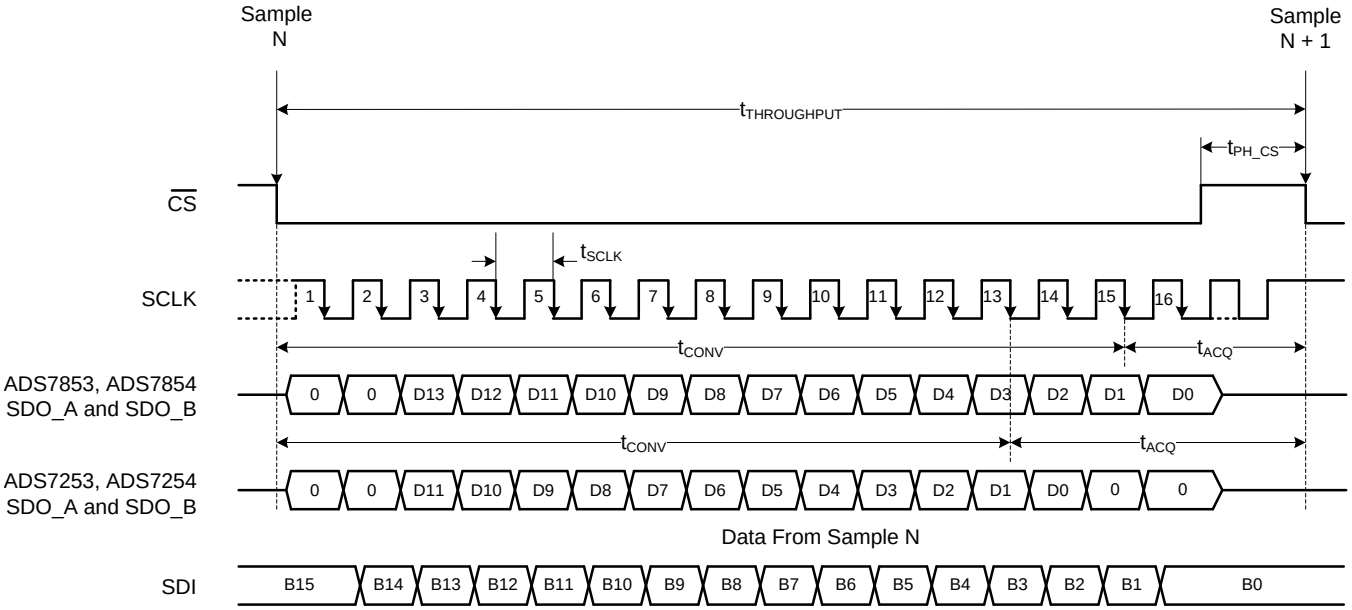


**Figure 92. 16-CLK, Dual-SDO Mode Timing Diagram**


Copyright © 2013–2014, Texas Instruments Incorporated

A $\overline{CS}$ falling edge brings the serial data bus out of 3-state and also outputs a 0 on the SDO_A and SDO_B pins. The subsequent SCLK falling edges are used for conversion and for data transfer using the serial interface, as shown in Table 15.

The sample-and-hold circuit goes back into sample mode as soon as the conversion process is over.

**Table 15. Data Launch Edge**

| DEVICE | PINS | LAUNCH EDGE | | | | | | | | |
|---|---|---|---|---|---|---|---|---|---|---|
| | | $\overline{CS}$ | SCLK | | | | | | | $\overline{CS}$ |
| | | ↓ | ↓1 | ↓2 | — | ↓13 | ↓14 | ↓15 | ↓16 ... | ↑ |
| ADS7854 | SDO-A | 0 | 0 | D13_A | — | D2_A | D1_A | D0_A | 0 ... | Hi-Z |
| | SDO-B | 0 | 0 | D13_B | — | D2_B | D1_B | D0_B | 0 ... | Hi-Z |
| ADS7254 | SDO-A | 0 | 0 | D11_A | — | D0_A | 0 | 0 | 0 ... | Hi-Z |
| | SDO-B | 0 | 0 | D11_B | — | D0_B | 0 | 0 | 0 ... | Hi-Z |

In this mode, at least 16 SCLK falling edges must be given to validate the read or write frame. A $\overline{CS}$ rising edge ends the frame and puts the serial bus into 3-state.

Refer to Table 16 for timing specifications specific to this serial interface mode.

**Table 16. 16-CLK, Dual-SDO Interface Specific Timing**

| PARAMETER | | TEST CONDITIONS | MIN | TYP | MAX | UNIT |
|---|---|---|---|---|---|---|
| **TIMING REQUIREMENTS** | | | | | | |
| $t_{CLK}$ | CLOCK period | ADS7854 | 55.5 | | | ns |
| | | ADS7254 | 55.5 | | | ns |
| $t_{ACQ}$ | Acquisition time | ADS7854 | | $4 \times t_{CLK}$ | | ns |
| | | ADS7254 | | $6 \times t_{CLK}$ | | ns |
| **TIMING SPECIFICATIONS** | | | | | | |
| $t_{CONV}$ | Conversion time | ADS7854 | | $14 \times t_{CLK}$ | | ns |
| | | ADS7254 | | $12 \times t_{CLK}$ | | ns |

#### 8.5.3.2.4 16-CLK, Single-SDO Mode (CFR.B11 = 1, CFR.B10 = 1)

The 16-CLK, single-SDO mode provides the option of using only one SDO pin (SDO_A) and a lower-speed clock to read the conversion results of both ADCs. This interface mode is not supported by the ADS8354.

For the ADS7854 and ADS7254, this mode can be selected by writing CFR.B11 = 1 and CFR.B10 = 1. The SDO_A pin is used to output the conversion results of both ADCs (ADC_A and ADC_B). SDO_B remains in 3-state and can be treated as a no connect (NC) pin. Figure 93 shows a detailed timing diagram for this mode.

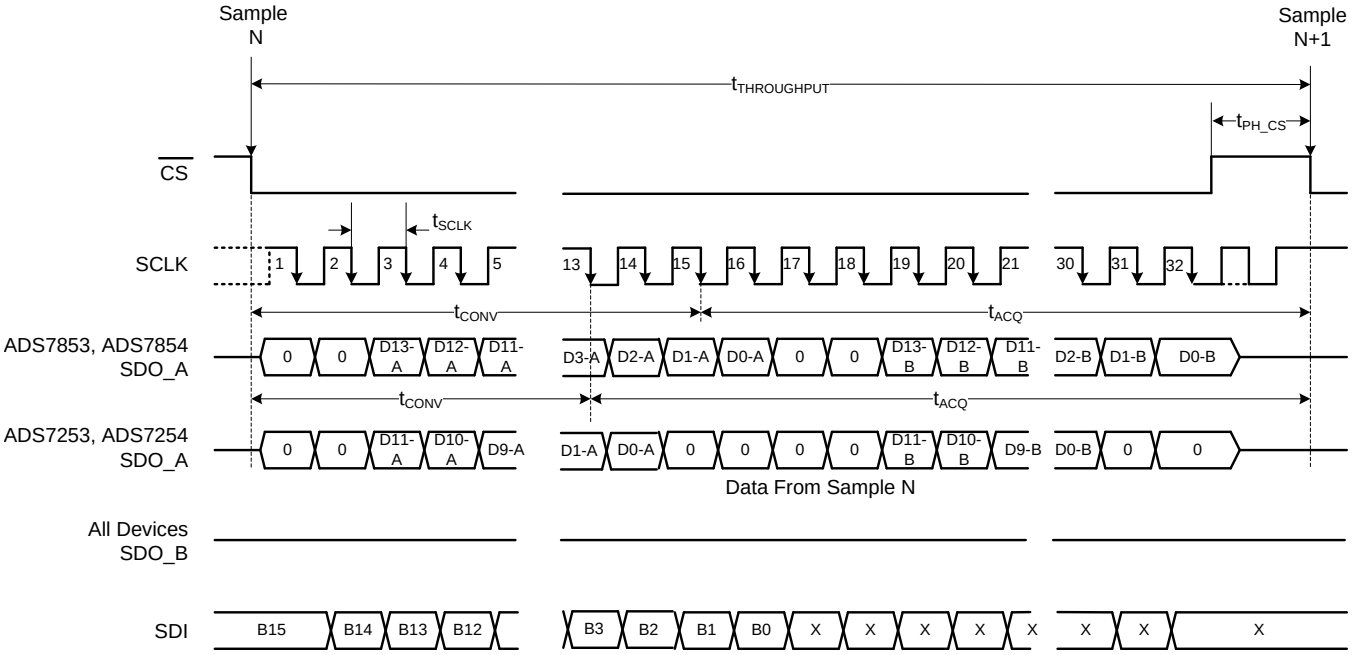


**Figure 93. 16-CLK, Single-SDO Mode Timing Diagram**

A $\overline{CS}$ falling edge brings the serial data bus out of 3-state and also outputs a 0 on the SDO_A pin. The subsequent SCLK falling edges are used for conversion and for data transfer using the serial interface, as shown in Table 17.

The sample-and-hold circuit goes back into sample mode as soon as the conversion process is over.

**Table 17. Data Launch Edge**

| DEVICE | PIN | LAUNCH EDGE | | | | | | | | | | | | | | | |
|---|---|---|---|---|---|---|---|---|---|---|---|---|---|---|---|---|---|
| | | $\overline{CS}$ | SCLK | | | | | | | | | | | | | | $\overline{CS}$ |
| | | ↓ | ↓1 | ↓2 | — | ↓13 | ↓14 | ↓15 | ↓16 | ↓17 | ↓18 | — | ↓29 | ↓30 | ↓31 | ↓32 ... | ↑ |
| ADS7854 | SDO-A | 0 | 0 | D13_A | — | D2_A | D1_A | D0_A | 0 | 0 | D13_B | — | D2_B | D1_B | D0_B | 0 ... | Hi-Z |
| ADS7254 | SDO-A | 0 | 0 | D11_A | — | D0_A | 0 | 0 | 0 | 0 | D11_B | — | D0_B | 0 | 0 | 0 ... | Hi-Z |


Copyright © 2013–2014, Texas Instruments Incorporated

In this mode, at least 32 SCLK falling edges must be given to validate the read/write frame. A $\overline{CS}$ rising edge ends the frame and puts the serial bus into 3-state.

Refer to Table 18 for timing specifications specific to this serial interface mode.

**Table 18. 16-CLK, Single-SDO Interface Specific Timing**

| PARAMETER | | TEST CONDITIONS | MIN | TYP | MAX | UNIT |
|---|---|---|---|---|---|---|
| **TIMING REQUIREMENTS** | | | | | | |
| $t_{CLK}$ | CLOCK period | ADS7854 | 55.5 | | | ns |
| | | ADS7254 | 55.5 | | | ns |
| $t_{ACQ}$ | Acquisition time | ADS7854 | | 19 × $t_{CLK}$ | | ns |
| | | ADS7254 | | 21 × $t_{CLK}$ | | ns |
| **TIMING SPECIFICATIONS** | | | | | | |
| $t_{CONV}$ | Conversion time | ADS7854 | | 14 × $t_{CLK}$ | | ns |
| | | ADS7254 | | 12 × $t_{CLK}$ | | ns |

### 8.5.4 Low-Power Modes

In normal mode of operation, all internal circuits of the device are always powered up and the device is always ready to commence a new conversion. This mode enables the device to support the rated throughput. The device also supports two low-power modes to optimize the power consumption at lower throughputs: STANDBY mode and software power-down (SPD) mode.

#### *8.5.4.1 STANDBY Mode*

The device supports a STANDBY mode of operation where some of the internal circuits of the device are powered down. However, if bit 6 in configuration register is set to 1 (CFR.B6 = 1), then the internal reference is not powered down and the contents of the REFDAC_A and REFDAC_B registers are retained to enable faster power-up to a normal mode of operation.

As shown in Figure 94, a valid write operation in frame (F) to program the configuration register with B5 set to 1 (CFR.B5 = 1) places the device into a STANDBY mode of operation on the following $\overline{CS}$ rising edge. While in STANDBY mode, SDO_A and SDO_B output all 1s when $\overline{CS}$ is low and remain in 3-state when $\overline{CS}$ is high.

To remain in STANDBY mode, SDI must remain low in the subsequent frames.

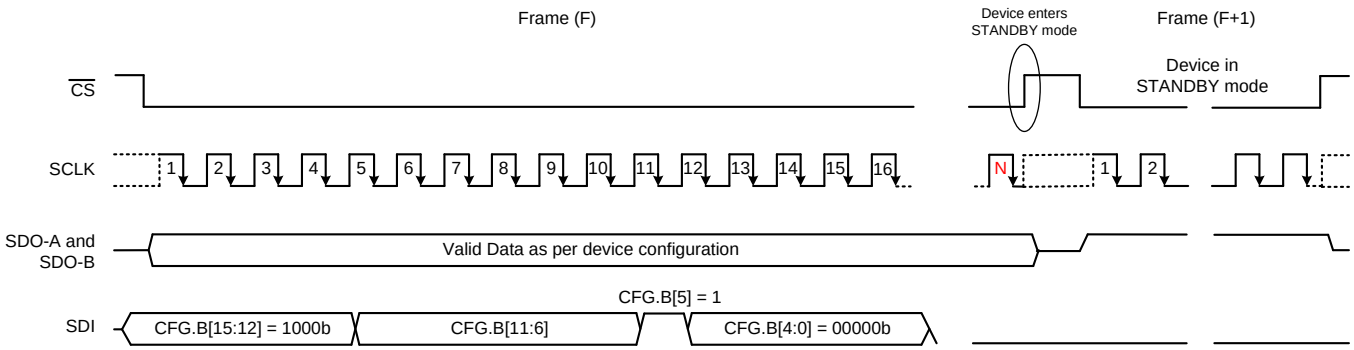


Note that *N* is a function of the device configuration, as described in Table 3.

**Figure 94. Enter STANDBY Mode**

As shown in Figure 95, a valid write operation in frame (F+3) by writing the configuration register with B5 set to 0 (CFR.B5 = 0) brings the device out of STANDBY mode on the following $\overline{CS}$ rising edge. Frame (F+3) must have at least 48 SCLK falling edges.

After exiting the STANDBY mode, a delay of $t_{PU_STDBY}$ must elapse for the internal circuits to fully power-up and resume normal operation in frame (F+4). Device configuration for frame (F+4) is determined by the status of the CFR.B[11:6] bits programmed during frame (F+3).

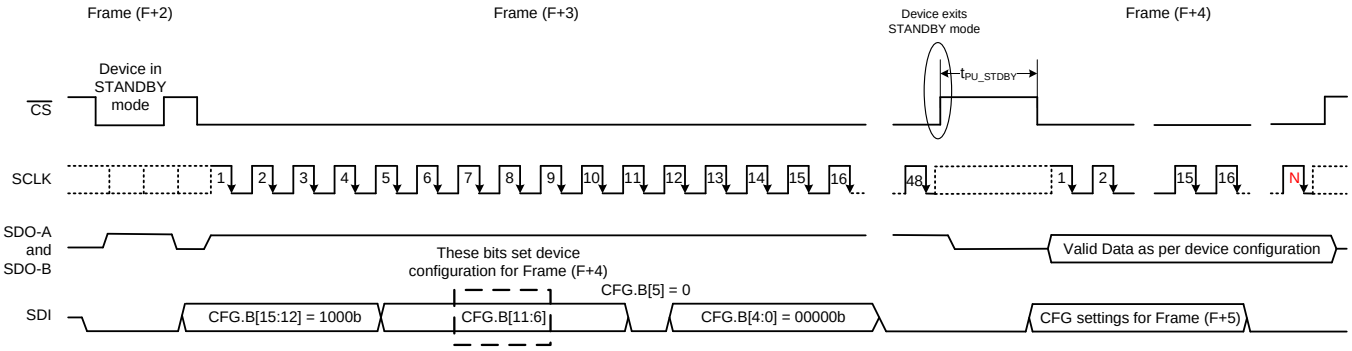


Note that *N* is a function of the device configuration, as described in Table 3.

**Figure 95. Exit STANDBY Mode**

Refer to the Timing Characteristics: Serial Interface for timing specifications for this operating mode.


Copyright © 2013–2014, Texas Instruments Incorporated

#### 8.5.4.2 Software Power-Down (SPD) Mode

In software power-down (SPD) mode, all internal circuits (including the internal references) are powered down. However, the contents of the REFDAC_A and REFDAC_B registers are retained.

As shown in Figure 96, to enter SPD mode, the device must be selected (by bringing $\overline{CS}$ low) and SDI must be kept high for a minimum of 48 SCLK cycles during frame (F). The device goes to SPD on the $\overline{CS}$ rising edge following frame (F). While in SPD mode, SDO_A and SDO_B go to 3-state irrespective of the status of the $\overline{CS}$ signal.

To remain in SPD mode, SDI must remain high in subsequent frames.

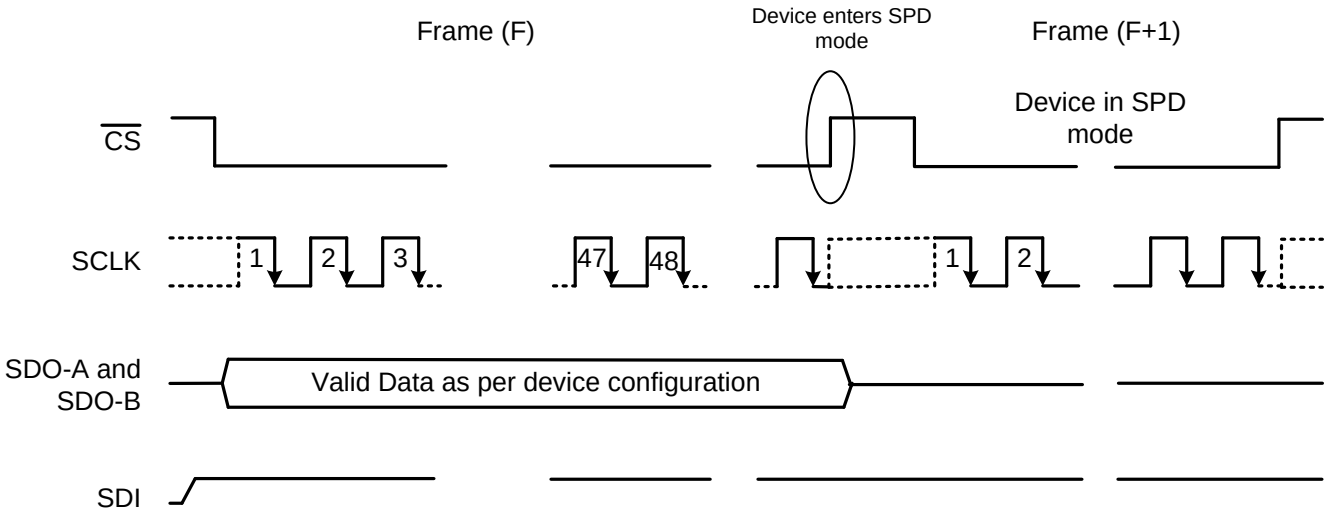


**Figure 96. Enter SPD Mode**

As shown in Figure 97, to exit SPD mode, the device must be selected (by bringing $\overline{CS}$ low) and SDI must be kept low for a minimum of 48 SCLK cycles during frame (F+3). The device starts powering-up on a $\overline{CS}$ rising edge following frame (F+3). After frame (F+3), a delay of $t_{PU_SPD}$ must elapse before programming the configuration register.

A valid write operation in frame (F+4) sets the device configuration for frame (F+5). Frame (F+4) must have at least 48 SCLK falling edges. The output data in frame (F+4) should be discarded.

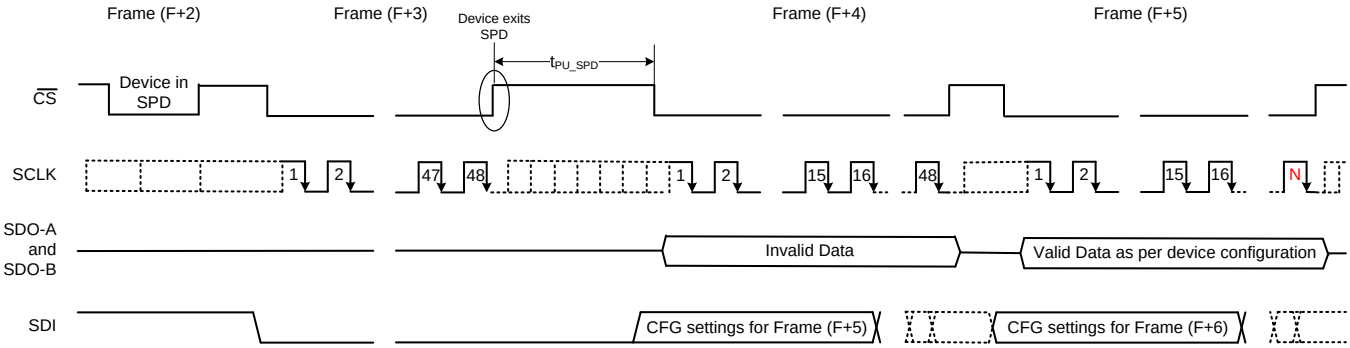


Note that *N* is a function of the device configuration, as described in Table 3.

**Figure 97. Exit SPD Mode**

Refer to the Timing Characteristics: Serial Interface for timing specifications for this operating mode.

### 8.5.5 Frame Abort, Reconversion, or Short-Cycling

As discussed in Figure 98, the minimum number of SCLK falling edges (N) that must be provided between the beginning and end of the frame depends on the serial interface mode. The SCLK falling edges (N) program the device and retrieve the conversion result. If $\overline{CS}$ is brought high before the expected number of SCLK falling edges are provided, the current frame is aborted and the device starts sampling the new analog input signal.

If frame (F) is aborted, then the register write operation attempted in frame (F) is considered invalid and the internal registers are not updated. The device continues to have the same configuration in frame (F+1) from frame (F).

The output data bits latched before the $\overline{CS}$ rising edge are still valid data that correspond to sample N.

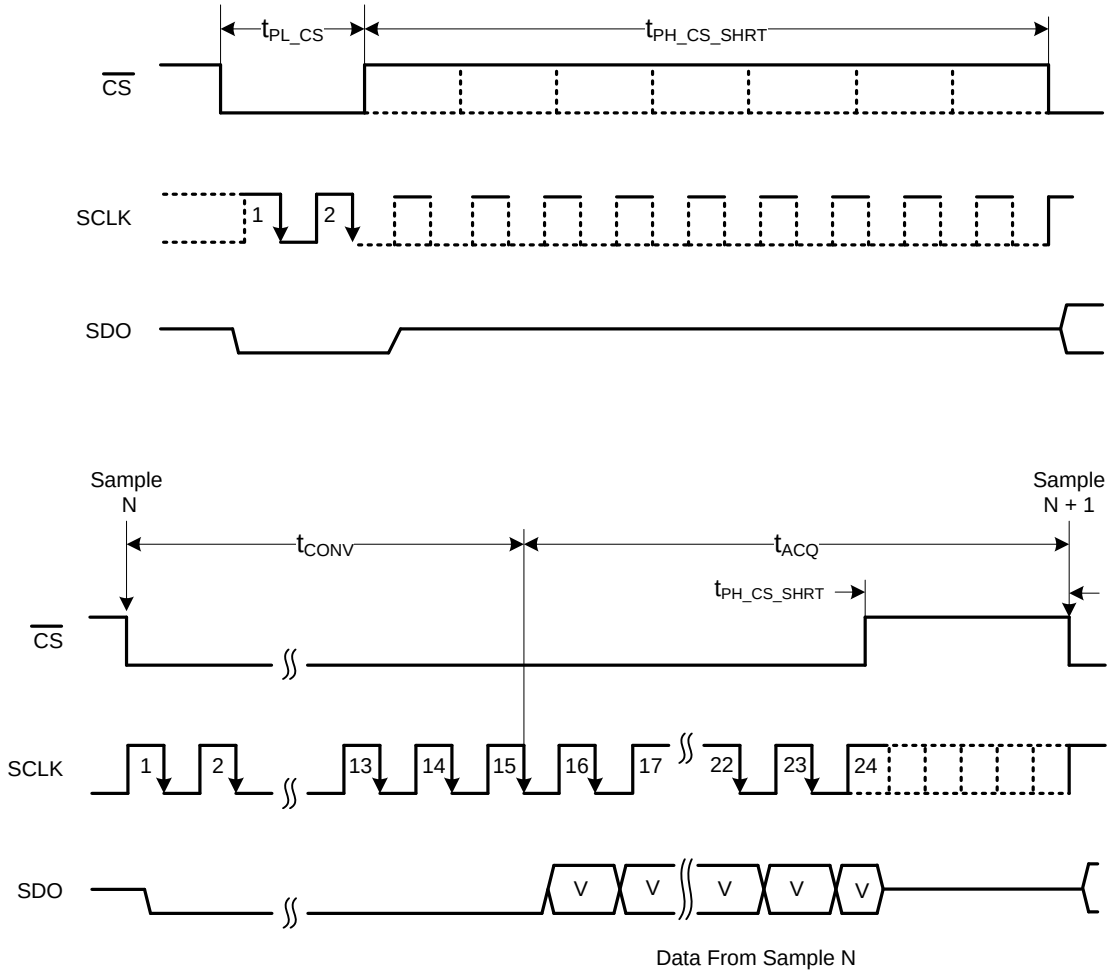


**Figure 98. Frame Abort, Reconversion, or Short-Cycling Feature**

Refer to the Timing Characteristics: Serial Interface for timing specifications for this operating mode.


Copyright © 2013–2014, Texas Instruments Incorporated

# 9 Application and Implementation

## 9.1 Application Information

The two primary circuits required to maximize the performance of a high-precision, successive approximation register (SAR), analog-to-digital converter (ADC) are the input driver and the reference driver circuits. This section details some general principles for designing these circuits, and some application circuits designed using these devices.

The device supports operation either with an internal or external reference source. Refer to the *Reference* section for details about the decoupling requirements.

The reference source to the ADC must provide low-drift and very accurate dc voltage and support the dynamic charge requirements without affecting the noise and linearity performance of the device. The output broadband noise (typically in the order of a few 100 $\mu V_{RMS}$) of the reference source must be appropriately filtered by using a low-pass filter with a cutoff frequency of a few hundred hertz. After band-limiting the noise from the reference source, the next important step is to design a reference buffer that can drive the dynamic load posed by the reference input of the ADC. At the start of each conversion, the reference buffer must regulate the voltage of the reference pin within 1 LSB of the intended value. This condition necessitates the use of a large filter capacitor at the reference pin of the ADC. The amplifier selected to drive the reference input pin must be stable while driving this large capacitor and should have low output impedance, low offset, and temperature drift specifications. To reduce the dynamic current requirements and crosstalk between the channels, a separate reference buffer is recommended for driving the reference input of each ADC channel.

The input driver circuit for a high-precision ADC mainly consists of two parts: a driving amplifier and a fly-wheel RC filter. The amplifier is used for signal conditioning of the input voltage and its low output impedance provides a buffer between the signal source and the switched capacitor inputs of the ADC. The RC filter helps attenuate the sampling charge injection from the switched-capacitor input stage of the ADC and functions as an antialiasing filter to band-limit the wideband noise contributed by the front-end circuit. Careful design of the front-end circuit is critical to meet the linearity and noise performance of a high-precision ADC.

### 9.1.1 Input Amplifier Selection

Selection criteria for the input amplifiers is highly dependent on the input signal type and the performance goals of the data acquisition system. Some key amplifier specifications to consider while selecting an appropriate amplifier to drive the inputs of the ADC are:

- *Small-signal bandwidth.* Select the small-signal bandwidth of the input amplifiers to be as high as possible after meeting the power budget of the system. Higher bandwidth reduces the closed-loop output impedance of the amplifier, thus allowing the amplifier to more easily drive the low cutoff frequency RC filter at the ADC inputs. Higher bandwidth also minimizes the harmonic distortion at higher input frequencies. In order to maintain the overall stability of the input driver circuit, the amplifier bandwidth should be selected as described in Equation 8:

$$Unity - Gain\ Bandwidth \geq 4 \times \left( \frac{1}{2\pi \times (R_{FLT} + R_{FLT}) \times C_{FLT}} \right) \tag{8}$$

- *Noise.* Noise contribution of the front-end amplifiers should be as low as possible to prevent any degradation in SNR performance of the system. As a rule of thumb, to ensure that the noise performance of the data acquisition system is not limited by the front-end circuit, the total noise contribution from the front-end circuit should be kept below 20% of the input-referred noise of the ADC. Noise from the input driver circuit is band-limited by designing a low cutoff frequency RC filter and is calculated by Equation 9:

$$N_G \times \sqrt{2} \times \sqrt{\left( \frac{V_{1/f_AMP_PP}}{6.6} \right)^2 + e_{n_RMS}^2 \times \frac{\pi}{2} \times f_{-3dB}} \leq \frac{1}{5} \times \frac{V_{REF}}{\sqrt{2}} \times 10^{-\left(\frac{SNR(dB)}{20}\right)}$$

where:

- $V_{1\ /\ f_AMP_PP}$ is the peak-to-peak flicker noise in µV,
- $e_{n_RMS}$ is the amplifier broadband noise density in nV/$\sqrt{Hz}$,
- $f_{-3dB}$ is the 3-dB bandwidth of the RC filter, and
- $N_G$ is the noise gain of the front-end circuit, which is equal to 1 in a buffer configuration. (9)

## Application Information (continued)

- *Distortion.* Both the ADC and the input driver introduce nonlinearity in a data acquisition block. As a rule of thumb, to ensure that the distortion performance of the data acquisition system is not limited by the front-end circuit, the distortion of the input driver should be at least 10 dB lower than the distortion of the ADC, as shown in Equation 10.

$$THD_{AMP} \leq THD_{ADC} - 10\,(dB) \tag{10}$$

- *Settling Time.* For dc signals with fast transients that are common in a multiplexed application, the input signal must settle to the desired accuracy at the inputs of the ADC during the acquisition time window. This condition is critical to maintain the overall linearity performance of the ADC. Typically, the amplifier data sheets specify the output settling performance only up to 0.1% to 0.001%, which may not be sufficient for the desired accuracy. Therefore, the settling behavior of the input driver should always be verified by TINA™-SPICE simulations before selecting the amplifier.

### 9.1.2 Antialiasing Filter

Converting analog-to-digital signals requires sampling an input signal at a constant rate. Any higher frequency content in the input signal beyond half the sampling frequency is digitized and folded back into the low-frequency spectrum. This process is called *aliasing*. Therefore, an analog, antialiasing filter must be used to remove the harmonic content from the input signal before being sampled by the ADC. An antialiasing filter is designed as a low-pass, RC filter, for which the 3-dB bandwidth is optimized based on specific application requirements. For dc signals with fast transients (including multiplexed input signals), a high-bandwidth filter is designed to allow accurately settling the signal at the ADC inputs during the small acquisition time window. For ac signals, the filter bandwidth should be kept low to band-limit the noise fed into the ADC input, thereby increasing the signal-to-noise ratio (SNR) of the system.

A filter capacitor, $C_{FLT}$, connected across the ADC inputs (as shown in Figure 99), filters the noise from the front-end drive circuitry, reduces the sampling charge injection and provides a charge bucket to quickly charge the internal sample-and-hold capacitors during the acquisition process. As a rule of thumb, the value of this capacitor should be at least 10 times the specified value of the ADC sampling capacitance. For these devices, the input sampling capacitance is equal to 40 pF. Thus, the value of $C_{FLT}$ should be greater than 400 pF. The capacitor should be a COG- or NPO-type because these capacitor types have a high-Q, low-temperature coefficient, and stable electrical characteristics under varying voltages, frequency, and time.

Note that driving capacitive loads can degrade the phase margin of the input amplifiers, thus making the amplifier marginally unstable. To avoid amplifier stability issues, series isolation resistors ($R_{FLT}$) are used at the output of the amplifiers. A higher value of $R_{FLT}$ is helpful from the amplifier stability perspective, but adds distortion as a result of interactions with the nonlinear input impedance of the ADC. Distortion increases with source impedance, input signal frequency, and input signal amplitude. Therefore, the selection of $R_{FLT}$ requires balancing the stability and distortion of the design. For these devices, TI recommends limiting the value of $R_{FLT}$ to a maximum of 22 Ω in order to avoid any significant degradation in linearity performance. The tolerance of the selected resistors can be chosen as 1% because the use of a differential capacitor at the input balances the effects resulting from any resistor mismatch.

$$f_{-3dB} = \frac{1}{2\pi \times (R_{FLT} + R_{FLT}) \times C_{FLT}}$$

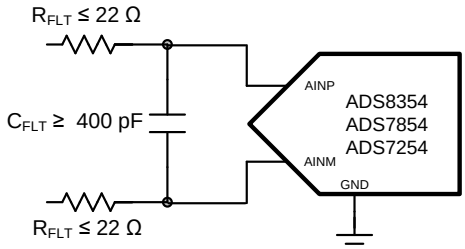


**Figure 99. Antialiasing Filter**

The input amplifier bandwidth should be much higher than the cutoff frequency of the antialiasing filter. TI strongly recommends performing a SPICE simulation to confirm that the amplifier has more than 40° phase margin with the selected filter. If an amplifier has less than a 40° phase margin with 22-Ω resistors, using a different amplifier with higher bandwidth or reducing the filter cutoff frequency with a larger differential capacitor is advisable.


Copyright © 2013–2014, Texas Instruments Incorporated

## 9.2 Typical Applications

### 9.2.1 DAQ Circuit to Achieve Maximum SINAD for a 10-kHz Input Signal at Full Throughput

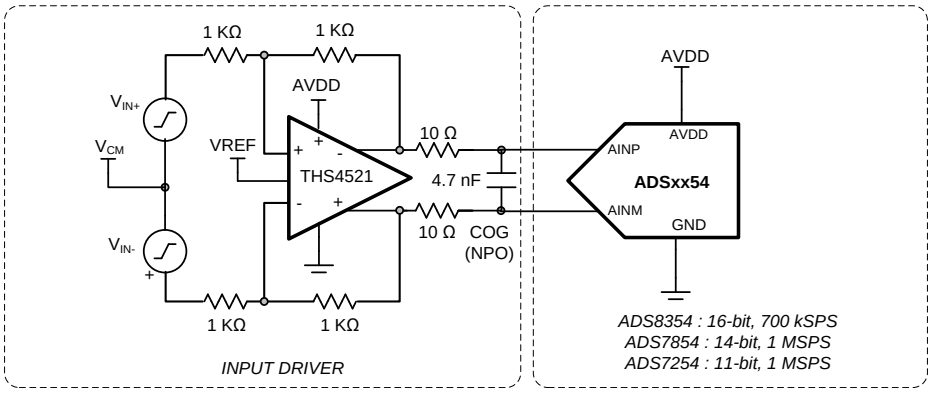


NOTE: Only one ADC channel is shown in this diagram. Replicate the same circuit for other ADC channels.

**Figure 100. DAQ Circuit: Maximum SINAD for a 10-kHz Input Signal at Full Throughput, 32-CLK Interface**

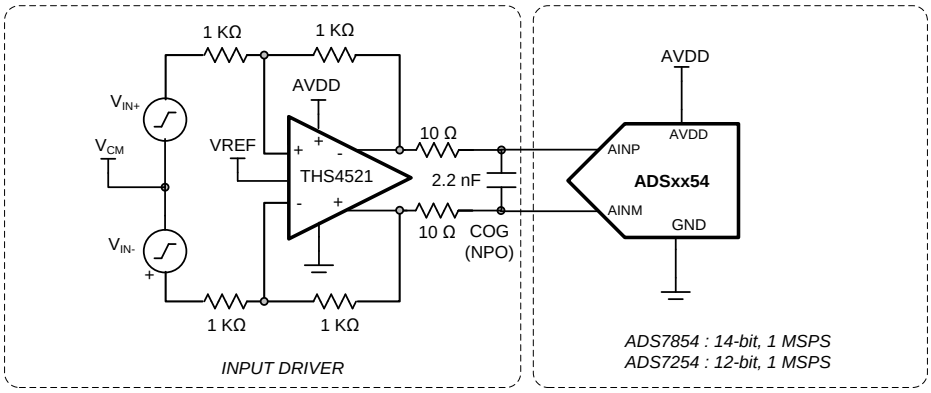


NOTE: Only one ADC channel is shown in this diagram. Replicate the same circuit for other ADC channels.

**Figure 101. DAQ Circuit: Maximum SINAD for a 10-kHz Input Signal at Full Throughput, 16-CLK Interface**

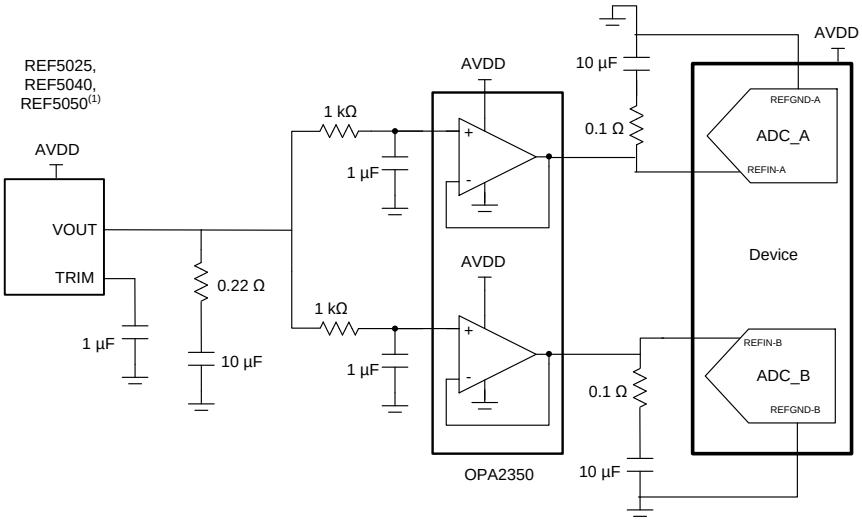


(1) When using the REF5050, AVDD must be set to 5.5 V.

**Figure 102. Reference Drive Circuit**

## Typical Applications (continued)

### 9.2.1.1 Design Requirements

To design an application circuit optimized to achieve target specifications listed in Table 19.

**Table 19. Target Specifications**

| TARGET SPECIFICATIONS | | TEST CONDITIONS | | | |
|---|---|---|---|---|---|
| SNR | THD | DEVICE | INPUT SIGNAL FREQUENCY | THROUGHPUT | INTERFACE MODE |
| > 88 dB | < -100 dB | ADS8354 | 10 kHz | Maximum supported | 32-CLK, dual-SDO |
| > 83.5 dB | < –95 dB | ADS7854 | 10 kHz | Maximum supported | 32-CLK, dual-SDO |
| > 80.5 dB | < –88 dB | ADS7854 | 10 kHz | Maximum supported | 16-CLK, dual-SDO |
| > 72.5 dB | < –88 dB | ADS7254 | 10 kHz | Maximum supported | 32-CLK, dual-SDO |
| > 71.5 dB | < –85 dB | ADS7254 | 10 kHz | Maximum supported | 16-CLK, dual-SDO |

### 9.2.1.2 Detailed Design Procedure

Best practice is for the distortion from the input driver to be at least 10 dB less than the ADC distortion. The distortion resulting from variation in the common-mode signal is eliminated by using a fully-differential amplifier (FDA) that establishes a fixed common-mode level at the ADC input. The low-power THS4521, used as an input driver, provides exceptional ac performance because of its extremely low-distortion and high-bandwidth specifications. The output common-mode voltage of the THS4521 is set by the voltage provided on its $V_{OCM}$ pin. In addition, the components of the antialiasing filter are such that the noise from the front-end circuit is kept low without adding distortion to the input signal.

The application circuit illustrated in Figure 100 is optimized to achieve the lowest distortion and lowest noise for a 10-kHz input signal fed to the ADS8354 or ADS7854 or ADS7254 operating at full throughput with the default 32-CLK, dual-SDO interface mode. The input signal is processed through a high-bandwidth, low-distortion, fully-differential amplifier and a low-pass RC filter before being fed into the device.

The ADS7854 and the ADS7254 also support 16-CLK interface modes that achieve the rated throughput rate at much lower SCLK frequencies. However, when using the 16-CLK interface modes, the device receives less acquisition time when compared to the 32-CLK interface modes. The application circuit illustrated in Figure 101 is optimized to achieve the lowest distortion and lowest noise for a 10-kHz input signal fed to the ADS7854 or ADS7254 operating at full throughput with the 16-CLK, dual-SDO interface mode. The input signal is processed through a high-bandwidth, low-distortion, fully-differential amplifier and a low-pass RC filter before being fed into the device.

Figure 102 illustrates the reference driver circuit when operation with an external reference is desired. The reference voltage is generated by the high-precision, low-noise REF50xx circuit. The output broadband noise of the reference is heavily filtered by a low-pass filter with a 3-dB cutoff frequency of 160 Hz. The decoupling capacitor on each reference pin is selected to be 10 µF. The low output impedance, low noise, and fast settling time makes the OPA2350 a good choice for driving this high capacitive load.


Copyright © 2013–2014, Texas Instruments Incorporated

#### 9.2.1.3 Application Curves

To minimize external components and to maximize the dynamic range of the ADC, device is configured to operate with internal reference (CFR.B6 = 1) and ±2 x $V_{REF_x}$ input full scale range (CFR.B9 = 1).

Figure 103, Figure 104, and Figure 105, show the FFT plots and test results obtained with the ADS8354, ADS7854, and ADS7254, respectively, operating at full throughput with a 32-CLK interface and the circuit configuration of Figure 100.

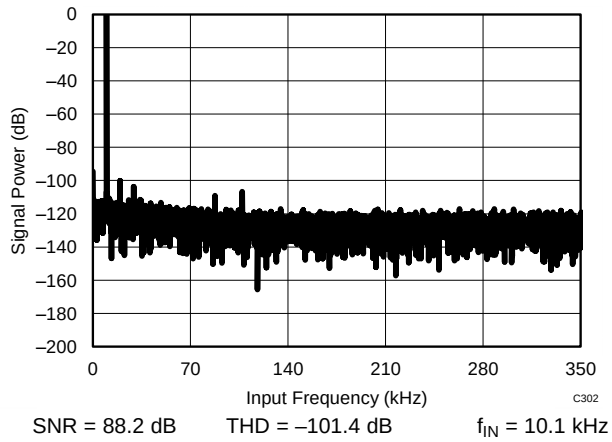


**Figure 103. ADS8354 in 32-CLK Interface Mode**

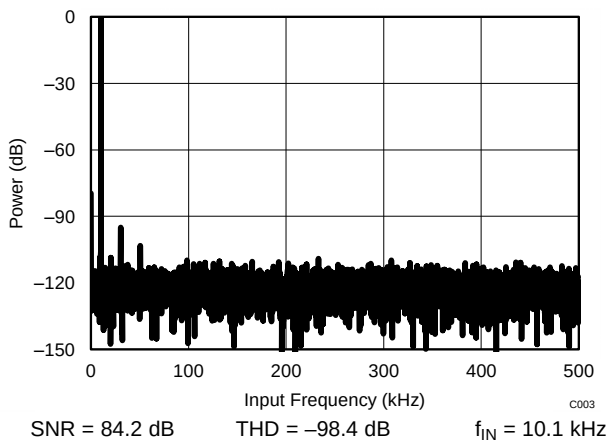


**Figure 104. ADS7854 in 32-CLK Interface Mode**

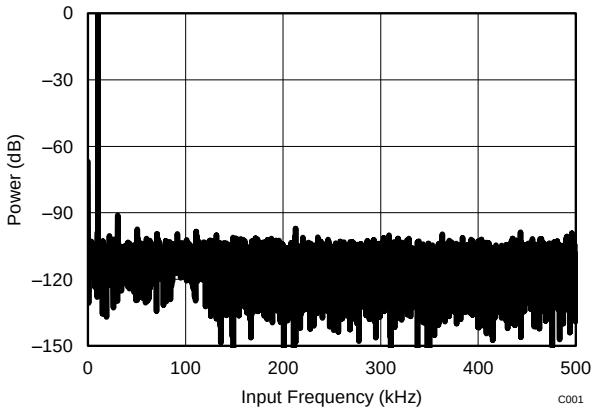


**Figure 105. ADS7254 in 32-CLK Interface Mode**

Figure 106 and Figure 107 show the FFT plots and test results obtained with the ADS7854 and ADS7254, respectively, operating at full throughput with 16-CLK interface and the circuit configuration of Figure 101.

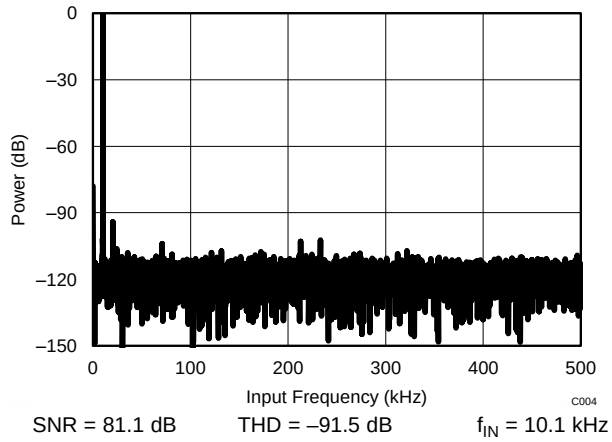


**Figure 106. ADS7854 in 16-CLK Interface Mode**

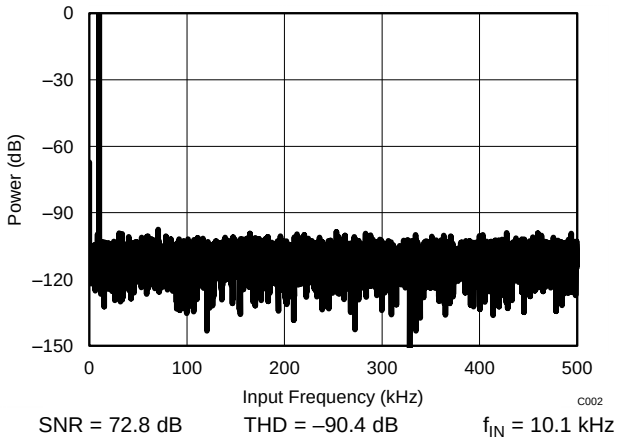


**Figure 107. ADS7254 in 16-CLK Interface Mode**


Copyright © 2013–2014, Texas Instruments Incorporated

### 9.2.2 DAQ Circuit to Achieve Maximum SINAD for a 100-kHz Input Signal at Full Throughput

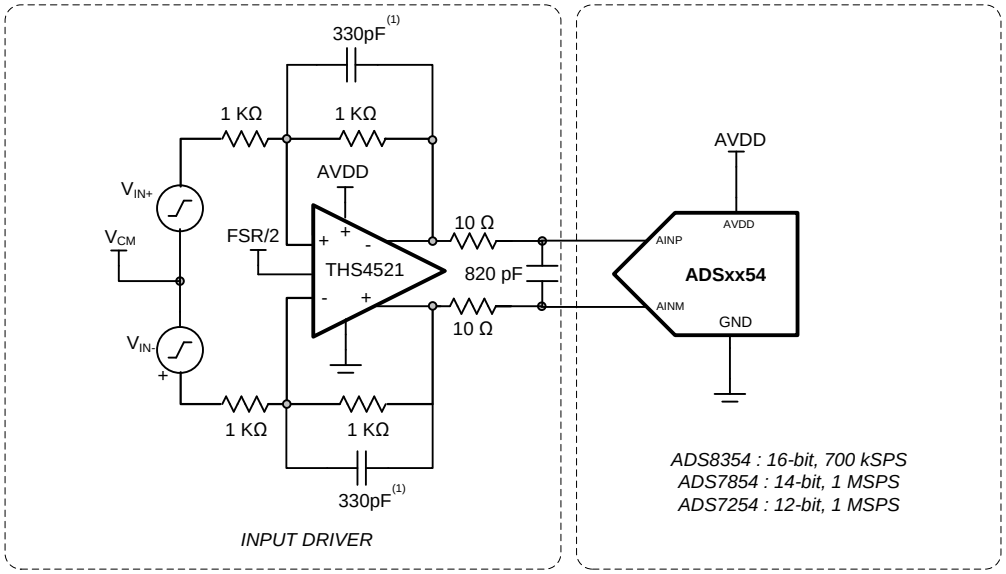


NOTE: Only one ADC channel is shown in this diagram. Replicate the same circuit for other ADC channels.

(1) The 330 pF capacitors are not required for ADS7854 and ADS7254.

**Figure 108. DAQ Circuit: Maximum SINAD for a 100-kHz Input Signal at Full Throughput**

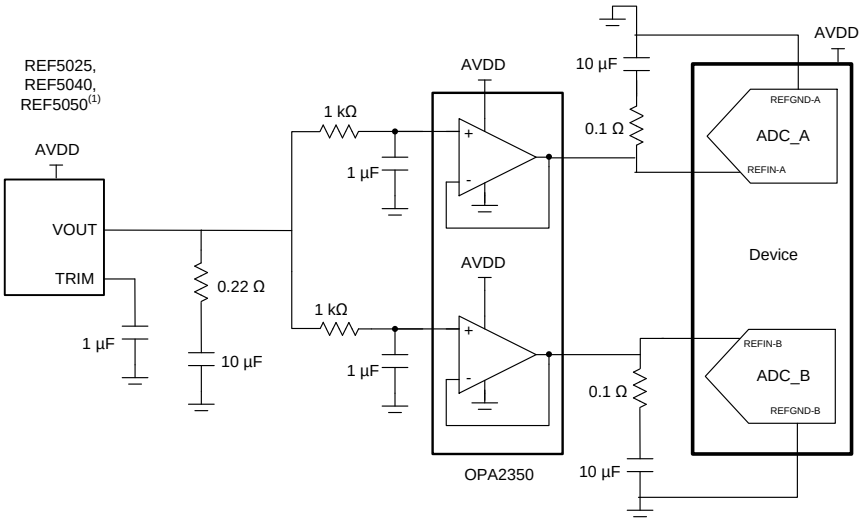


(1) When using the REF5050, AVDD must be set to 5.5 V.

**Figure 109. Reference Drive Circuit**

#### 9.2.2.1 Design Requirements

To design an application circuit optimized to achieve target specifications listed in Table 20.

**Table 20. Target Specifications**

| TARGET SPECIFICATIONS | | TEST CONDITIONS | | | |
|---|---|---|---|---|---|
| SNR | THD | DEVICE | INPUT SIGNAL FREQUENCY | THROUGHPUT | INTERFACE MODE |
| > 86 dB | < -95 dB | ADS8354 | 100 kHz | Maximum supported | 32-CLK, dual-SDO |
| > 81.5 dB | < –90 dB | ADS7854 | 100 kHz | Maximum supported | 32-CLK, dual-SDO |
| > 79.5 dB | < –88 dB | ADS7854 | 100 kHz | Maximum supported | 16-CLK, dual-SDO |
| > 72 dB | < –88 dB | ADS7254 | 100 kHz | Maximum supported | 32-CLK, dual-SDO |
| > 71 dB | < –85 dB | ADS7254 | 100 kHz | Maximum supported | 16-CLK, dual-SDO |

#### 9.2.2.2 Detailed Design Procedure

Best practice is for the distortion from the input driver to be at least 10 dB less than the ADC distortion. The distortion resulting from variation in the common-mode signal is eliminated by using a fully-differential amplifier (FDA) that establishes a fixed common-mode level at the ADC input. The low-power THS4521, used as an input driver, provides exceptional ac performance because of its extremely low-distortion and high-bandwidth specifications. The output common-mode voltage of the THS4521 is set by the voltage provided on its $V_{OCM}$ pin. In addition, the components of the antialiasing filter are such that the noise from the front-end circuit is kept low without adding distortion to the input signal.

The application circuit illustrated in Figure 108 is optimized to achieve the lowest distortion and lowest noise for a 100-kHz input signal fed to the ADS8354 or ADS7854 or ADS7254 operating at full throughput. The input signal is processed through a high-bandwidth, low-distortion, fully-differential amplifier and a low-pass RC filter before being fed into the device.

Figure 102 illustrates the reference driver circuit when operation with an external reference is desired. The reference voltage is generated by the high-precision, low-noise REF50xx circuit. The output broadband noise of the reference is heavily filtered by a low-pass filter with a 3-dB cutoff frequency of 160 Hz. The decoupling capacitor on each reference pin is selected to be 10 µF. The low output impedance, low noise, and fast settling time makes the OPA2350 a good choice for driving this high capacitive load.


Copyright © 2013–2014, Texas Instruments Incorporated

#### 9.2.2.3 Application Curves

To minimize external components and to maximize the dynamic range of the ADC, device is configured to operate with internal reference (CFR.B6 = 1) and ±2 x $V_{REF_x}$ input full scale range (CFR.B9 = 1).

Figure 110, Figure 111, and Figure 112 show the FFT plots and test results obtained with the ADS8354, ADS7854 and ADS7254, respectively, operating at full throughput with a 32-CLK interface and the circuit configuration of Figure 108.

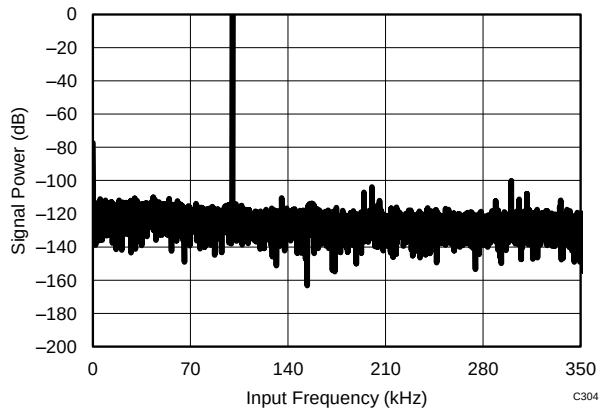


SNR = 86.2 dB THD = –97.5 dB $f_{IN}$ = 100.2 kHz

**Figure 110. ADS8354 in 32-CLK Interface Mode**

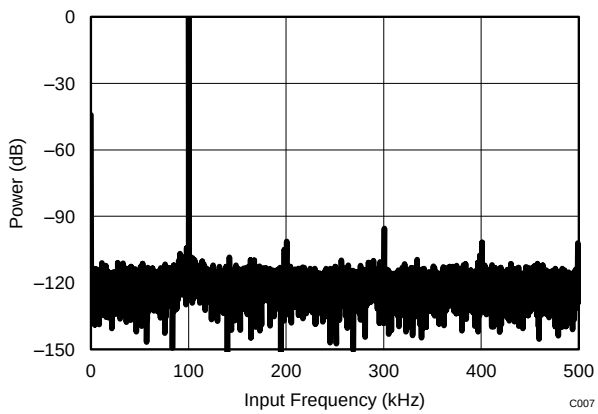


SNR = 82.6 dB THD = –93.1 dB $f_{IN}$ = 100.2 kHz

**Figure 111. ADS7854 in 32-CLK Interface Mode**

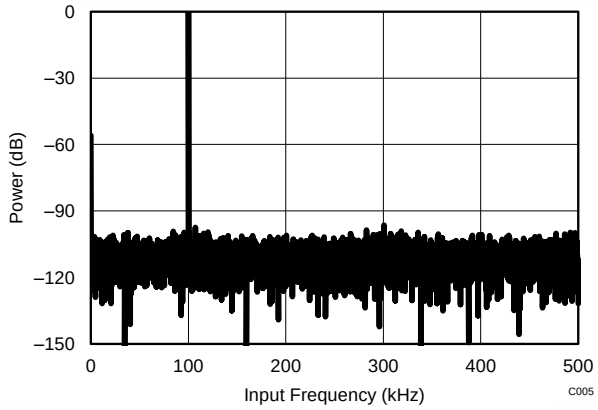


SNR = 72.9 dB THD = –90.1 dB $f_{IN}$ = 100.2 kHz

**Figure 112. ADS7254 in 32-CLK Interface Mode**

Figure 113 and Figure 114 show the FFT plots and test results obtained with the ADS7854 and ADS7254, respectively, operating with a 16-CLK interface and the circuit configuration of Figure 108.

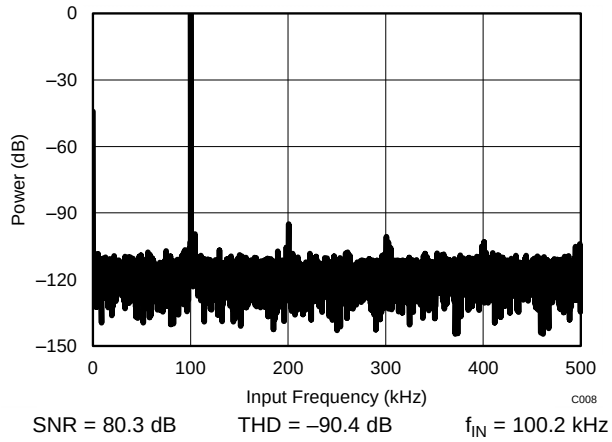


**Figure 113. ADS7854 in 16-CLK Interface Mode**

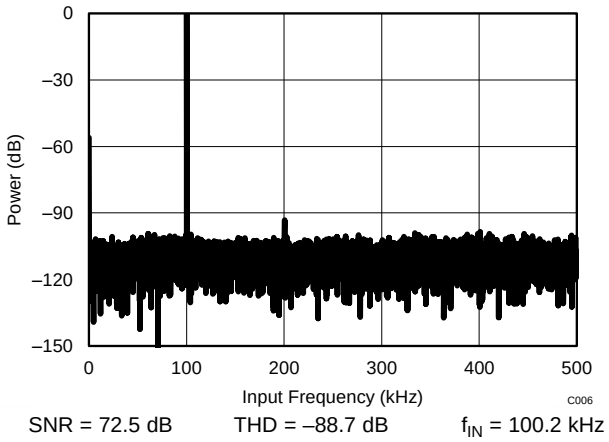


**Figure 114. ADS7254 in 16-CLK Interface Mode**


Copyright © 2013–2014, Texas Instruments Incorporated

## 10 Power-Supply Recommendations

The devices have two separate power supplies: AVDD and DVDD. The device operates on AVDD; DVDD is used for the interface circuits. AVDD and DVDD can be independently set to any value within the permissible ranges.

When using the device with ±2 × $V_{REF}$ input range (CFR.B9 = 1), the AVDD supply voltage value defines the permissible voltage swing on the analog input pins. To avoid saturation of output codes, and to use the full dynamic range on the analog input pins, AVDD must be set as shown in Equation 11, Equation 12, and Equation 13:

$$AVDD \geq 2 \times V_{REF_A} \quad (11)$$

$$AVDD \geq 2 \times V_{REF_B} \quad (12)$$

$$4.75\ V \leq AVDD \leq 5.25\ V \quad (13)$$

Decouple the AVDD and DVDD pins with the GND pin using individual 10-µF decoupling capacitors, as shown in Figure 115.

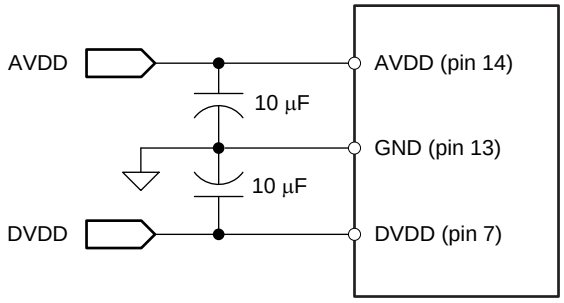


**Figure 115. Power-Supply Decoupling**

# 11 Layout

## 11.1 Layout Guidelines

Figure 116 shows a board layout example for the ADS8354, ADS7854, and ADS7254 with the WQFN package. Use a ground plane underneath the device and partition the PCB into analog and digital sections. Avoid crossing digital lines with the analog signal path and keep the analog input signals and the reference input signals away from noise sources. As shown in Figure 116, the analog input and reference signals are routed on the left side of the board and the digital connections are routed on the right side of the device.

The power sources to the device must be clean and well-bypassed. Use 10-µF, ceramic bypass capacitors in close proximity to the analog (AVDD) and digital (DVDD) power-supply pins. Avoid placing vias between the AVDD and DVDD pins and the bypass capacitors. Connect all ground pins to the ground plane using short, low impedance paths.

The REFIO-A and REFIO-B reference inputs and outputs are bypassed with 10-µF, X7R-grade, 0805-size, 16-V rated ceramic capacitors ($C_{REF-x}$). Place the reference bypass capacitors as close as possible to the reference REFIO-x pins and connect the bypass capacitors using short, low-inductance connections. Avoid placing vias between the REFIO-x pins and the bypass capacitors. Small 0.1-Ω to 0.2-Ω resistors ($R_{REF-x}$) are used in series with the reference bypass capacitors to improve stability.

The fly-wheel RC filters are placed immediately next to the input pins. Among ceramic surface-mount capacitors, COG (NPO) ceramic capacitors provide the best capacitance precision. The type of dielectric used in COG (NPO) ceramic capacitors provides the most stable electrical properties over voltage, frequency, and temperature changes. Figure 116 shows $C_{IN-A}$ and $C_{IN-B}$ filter capacitors placed across the analog input pins of the device.

## 11.2 Layout Example

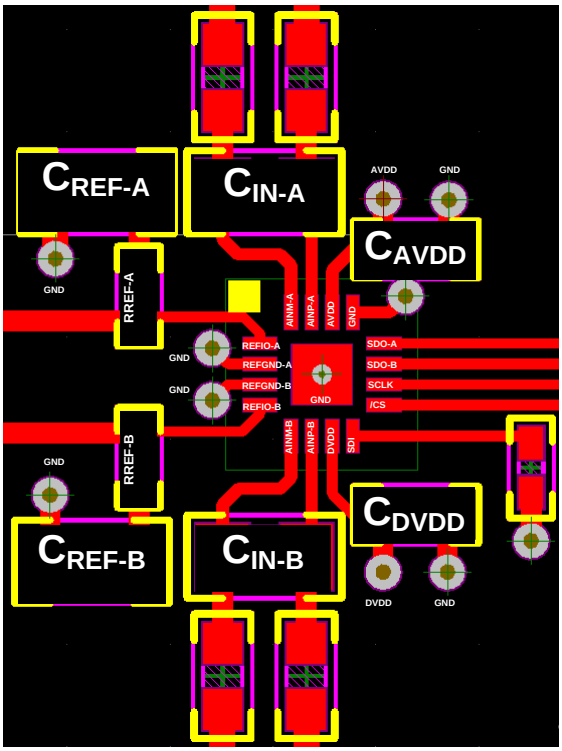


**Figure 116. Recommended Layout**


Copyright © 2013–2014, Texas Instruments Incorporated

# 12 Device and Documentation Support

## 12.1 Related Links

The table below lists quick access links. Categories include technical documents, support and community resources, tools and software, and quick access to sample or buy.

**Table 21. Related Links**

| PARTS | PRODUCT FOLDER | SAMPLE & BUY | TECHNICAL DOCUMENTS | TOOLS & SOFTWARE | SUPPORT & COMMUNITY |
|---|---|---|---|---|---|
| ADS8354 | Click here | Click here | Click here | Click here | Click here |
| ADS7854 | Click here | Click here | Click here | Click here | Click here |
| ADS7254 | Click here | Click here | Click here | Click here | Click here |

## 12.2 Related Documentation

- TIPD117 Verified Design Reference Guide: *12 Bit 1 MSPS Single Supply Dual Channel Data Acquisition System for Optical Encoders in Motor Control Application* Reference Design, SLAU517.
- REF5050 Data Sheet, SBOS410.
- OPA2350 Data Sheet, SBOS099.
- THS4521 Data Sheet, SBOS458.

## 12.3 Trademarks

TINA is a trademark of Texas Instruments Inc..
All other trademarks are the property of their respective owners.

## 12.4 Electrostatic Discharge Caution

This integrated circuit can be damaged by ESD. Texas Instruments recommends that all integrated circuits be handled with appropriate precautions. Failure to observe proper handling and installation procedures can cause damage.

ESD damage can range from subtle performance degradation to complete device failure. Precision integrated circuits may be more susceptible to damage because very small parametric changes could cause the device not to meet its published specifications.

## 12.5 Glossary

SLYZ022 — *TI Glossary*.

This glossary lists and explains terms, acronyms, and definitions.

# 13 Mechanical, Packaging, and Orderable Information

The following pages include mechanical packaging and orderable information. This information is the most current data available for the designated devices. This data is subject to change without notice and revision of this document. For browser-based versions of this data sheet, refer to the left-hand navigation.

## PACKAGING INFORMATION

| Orderable part number | Status (1) | Material type (2) | Package \| Pins | Package qty \| Carrier | RoHS (3) | Lead finish/ Ball material (4) | MSL rating/ Peak reflow (5) | Op temp (°C) | Part marking (6) |
|---|---|---|---|---|---|---|---|---|---|
| ADS7254IPW | Active | Production | TSSOP (PW) \| 16 | 90 \| TUBE | Yes | NIPDAU | Level-2-260C-1 YEAR | -40 to 125 | ADS7254 |
| ADS7254IPW.A | Active | Production | TSSOP (PW) \| 16 | 90 \| TUBE | Yes | NIPDAU | Level-2-260C-1 YEAR | -40 to 125 | ADS7254 |
| ADS7254IPW.B | Active | Production | TSSOP (PW) \| 16 | 90 \| TUBE | Yes | NIPDAU | Level-2-260C-1 YEAR | -40 to 125 | ADS7254 |
| ADS7254IPWG4 | Active | Production | TSSOP (PW) \| 16 | 90 \| TUBE | Yes | NIPDAU | Level-2-260C-1 YEAR | -40 to 125 | ADS7254 |
| ADS7254IPWG4.A | Active | Production | TSSOP (PW) \| 16 | 90 \| TUBE | Yes | NIPDAU | Level-2-260C-1 YEAR | -40 to 125 | ADS7254 |
| ADS7254IPWG4.B | Active | Production | TSSOP (PW) \| 16 | 90 \| TUBE | Yes | NIPDAU | Level-2-260C-1 YEAR | -40 to 125 | ADS7254 |
| ADS7254IPWR | Active | Production | TSSOP (PW) \| 16 | 2000 \| LARGE T&R | Yes | NIPDAU | Level-2-260C-1 YEAR | -40 to 125 | ADS7254 |
| ADS7254IPWR.A | Active | Production | TSSOP (PW) \| 16 | 2000 \| LARGE T&R | Yes | NIPDAU | Level-2-260C-1 YEAR | -40 to 125 | ADS7254 |
| ADS7254IPWR.B | Active | Production | TSSOP (PW) \| 16 | 2000 \| LARGE T&R | Yes | NIPDAU | Level-2-260C-1 YEAR | -40 to 125 | ADS7254 |
| ADS7254IRTER | Active | Production | WQFN (RTE) \| 16 | 3000 \| LARGE T&R | Yes | NIPDAU | Level-2-260C-1 YEAR | -40 to 125 | 7254 |
| ADS7254IRTER.A | Active | Production | WQFN (RTE) \| 16 | 3000 \| LARGE T&R | Yes | NIPDAU | Level-2-260C-1 YEAR | -40 to 125 | 7254 |
| ADS7254IRTER.B | Active | Production | WQFN (RTE) \| 16 | 3000 \| LARGE T&R | Yes | NIPDAU | Level-2-260C-1 YEAR | -40 to 125 | 7254 |
| ADS7254IRTET | Active | Production | WQFN (RTE) \| 16 | 250 \| SMALL T&R | Yes | NIPDAU | Level-2-260C-1 YEAR | -40 to 125 | 7254 |
| ADS7254IRTET.A | Active | Production | WQFN (RTE) \| 16 | 250 \| SMALL T&R | Yes | NIPDAU | Level-2-260C-1 YEAR | -40 to 125 | 7254 |
| ADS7254IRTET.B | Active | Production | WQFN (RTE) \| 16 | 250 \| SMALL T&R | Yes | NIPDAU | Level-2-260C-1 YEAR | -40 to 125 | 7254 |
| ADS7854IPW | Active | Production | TSSOP (PW) \| 16 | 90 \| TUBE | Yes | NIPDAU | Level-2-260C-1 YEAR | -40 to 125 | ADS7854 |
| ADS7854IPW.A | Active | Production | TSSOP (PW) \| 16 | 90 \| TUBE | Yes | NIPDAU | Level-2-260C-1 YEAR | -40 to 125 | ADS7854 |
| ADS7854IPW.B | Active | Production | TSSOP (PW) \| 16 | 90 \| TUBE | Yes | NIPDAU | Level-2-260C-1 YEAR | -40 to 125 | ADS7854 |
| ADS7854IPWR | Active | Production | TSSOP (PW) \| 16 | 2000 \| LARGE T&R | Yes | NIPDAU | Level-2-260C-1 YEAR | -40 to 125 | ADS7854 |
| ADS7854IPWR.A | Active | Production | TSSOP (PW) \| 16 | 2000 \| LARGE T&R | Yes | NIPDAU | Level-2-260C-1 YEAR | -40 to 125 | ADS7854 |
| ADS7854IPWR.B | Active | Production | TSSOP (PW) \| 16 | 2000 \| LARGE T&R | Yes | NIPDAU | Level-2-260C-1 YEAR | -40 to 125 | ADS7854 |
| ADS7854IRTER | Active | Production | WQFN (RTE) \| 16 | 3000 \| LARGE T&R | Yes | NIPDAU | Level-2-260C-1 YEAR | -40 to 125 | 7854 |
| ADS7854IRTER.A | Active | Production | WQFN (RTE) \| 16 | 3000 \| LARGE T&R | Yes | NIPDAU | Level-2-260C-1 YEAR | -40 to 125 | 7854 |
| ADS7854IRTER.B | Active | Production | WQFN (RTE) \| 16 | 3000 \| LARGE T&R | Yes | NIPDAU | Level-2-260C-1 YEAR | -40 to 125 | 7854 |
| ADS7854IRTET | Active | Production | WQFN (RTE) \| 16 | 250 \| SMALL T&R | Yes | NIPDAU | Level-2-260C-1 YEAR | -40 to 125 | 7854 |
| ADS7854IRTET.A | Active | Production | WQFN (RTE) \| 16 | 250 \| SMALL T&R | Yes | NIPDAU | Level-2-260C-1 YEAR | -40 to 125 | 7854 |
| ADS7854IRTET.B | Active | Production | WQFN (RTE) \| 16 | 250 \| SMALL T&R | Yes | NIPDAU | Level-2-260C-1 YEAR | -40 to 125 | 7854 |
| ADS8354IPW | Active | Production | TSSOP (PW) \| 16 | 90 \| TUBE | Yes | NIPDAU | Level-2-260C-1 YEAR | -40 to 125 | ADS8354 |
| ADS8354IPW.A | Active | Production | TSSOP (PW) \| 16 | 90 \| TUBE | Yes | NIPDAU | Level-2-260C-1 YEAR | -40 to 125 | ADS8354 |

| Orderable part number | Status (1) | Material type (2) | Package \| Pins | Package qty \| Carrier | RoHS (3) | Lead finish/ Ball material (4) | MSL rating/ Peak reflow (5) | Op temp (°C) | Part marking (6) |
|---|---|---|---|---|---|---|---|---|---|
| ADS8354IPW.B | Active | Production | TSSOP (PW) \| 16 | 90 \| TUBE | Yes | NIPDAU | Level-2-260C-1 YEAR | -40 to 125 | ADS8354 |
| ADS8354IPWG4 | Active | Production | TSSOP (PW) \| 16 | 90 \| TUBE | Yes | NIPDAU | Level-2-260C-1 YEAR | -40 to 125 | ADS8354 |
| ADS8354IPWG4.A | Active | Production | TSSOP (PW) \| 16 | 90 \| TUBE | Yes | NIPDAU | Level-2-260C-1 YEAR | -40 to 125 | ADS8354 |
| ADS8354IPWG4.B | Active | Production | TSSOP (PW) \| 16 | 90 \| TUBE | Yes | NIPDAU | Level-2-260C-1 YEAR | -40 to 125 | ADS8354 |
| ADS8354IPWR | Active | Production | TSSOP (PW) \| 16 | 2000 \| LARGE T&R | Yes | NIPDAU | Level-2-260C-1 YEAR | -40 to 125 | ADS8354 |
| ADS8354IPWR.A | Active | Production | TSSOP (PW) \| 16 | 2000 \| LARGE T&R | Yes | NIPDAU | Level-2-260C-1 YEAR | -40 to 125 | ADS8354 |
| ADS8354IPWR.B | Active | Production | TSSOP (PW) \| 16 | 2000 \| LARGE T&R | Yes | NIPDAU | Level-2-260C-1 YEAR | -40 to 125 | ADS8354 |
| ADS8354IRTER | Active | Production | WQFN (RTE) \| 16 | 3000 \| LARGE T&R | Yes | NIPDAU | Level-2-260C-1 YEAR | -40 to 125 | 8354 |
| ADS8354IRTER.A | Active | Production | WQFN (RTE) \| 16 | 3000 \| LARGE T&R | Yes | NIPDAU | Level-2-260C-1 YEAR | -40 to 125 | 8354 |
| ADS8354IRTER.B | Active | Production | WQFN (RTE) \| 16 | 3000 \| LARGE T&R | Yes | NIPDAU | Level-2-260C-1 YEAR | -40 to 125 | 8354 |
| ADS8354IRTET | Active | Production | WQFN (RTE) \| 16 | 250 \| SMALL T&R | Yes | NIPDAU | Level-2-260C-1 YEAR | -40 to 125 | 8354 |
| ADS8354IRTET.A | Active | Production | WQFN (RTE) \| 16 | 250 \| SMALL T&R | Yes | NIPDAU | Level-2-260C-1 YEAR | -40 to 125 | 8354 |
| ADS8354IRTET.B | Active | Production | WQFN (RTE) \| 16 | 250 \| SMALL T&R | Yes | NIPDAU | Level-2-260C-1 YEAR | -40 to 125 | 8354 |
| ADS8354IRTETG4 | Active | Production | WQFN (RTE) \| 16 | 250 \| SMALL T&R | Yes | NIPDAU | Level-2-260C-1 YEAR | -40 to 125 | 8354 |
| ADS8354IRTETG4.A | Active | Production | WQFN (RTE) \| 16 | 250 \| SMALL T&R | Yes | NIPDAU | Level-2-260C-1 YEAR | -40 to 125 | 8354 |
| ADS8354IRTETG4.B | Active | Production | WQFN (RTE) \| 16 | 250 \| SMALL T&R | Yes | NIPDAU | Level-2-260C-1 YEAR | -40 to 125 | 8354 |

(1) **Status:** For more details on status, see our product life cycle.

(2) **Material type:** When designated, preproduction parts are prototypes/experimental devices, and are not yet approved or released for full production. Testing and final process, including without limitation quality assurance, reliability performance testing, and/or process qualification, may not yet be complete, and this item is subject to further changes or possible discontinuation. If available for ordering, purchases will be subject to an additional waiver at checkout, and are intended for early internal evaluation purposes only. These items are sold without warranties of any kind.

(3) **RoHS values:** Yes, No, RoHS Exempt. See the TI RoHS Statement for additional information and value definition.

(4) **Lead finish/Ball material:** Parts may have multiple material finish options. Finish options are separated by a vertical ruled line. Lead finish/Ball material values may wrap to two lines if the finish value exceeds the maximum column width.

(5) **MSL rating/Peak reflow:** The moisture sensitivity level ratings and peak solder (reflow) temperatures. In the event that a part has multiple moisture sensitivity ratings, only the lowest level per JEDEC standards is shown. Refer to the shipping label for the actual reflow temperature that will be used to mount the part to the printed circuit board.

(6) **Part marking:** There may be an additional marking, which relates to the logo, the lot trace code information, or the environmental category of the part.

Multiple part markings will be inside parentheses. Only one part marking contained in parentheses and separated by a "~" will appear on a part. If a line is indented then it is a continuation of the previous line and the two combined represent the entire part marking for that device.

**Important Information and Disclaimer:**The information provided on this page represents TI's knowledge and belief as of the date that it is provided. TI bases its knowledge and belief on information provided by third parties, and makes no representation or warranty as to the accuracy of such information. Efforts are underway to better integrate information from third parties. TI has taken and continues to take reasonable steps to provide representative and accurate information but may not have conducted destructive testing or chemical analysis on incoming materials and chemicals. TI and TI suppliers consider certain information to be proprietary, and thus CAS numbers and other limited information may not be available for release.

In no event shall TI's liability arising out of such information exceed the total purchase price of the TI part(s) at issue in this document sold by TI to Customer on an annual basis.

## TAPE AND REEL INFORMATION

**REEL DIMENSIONS**

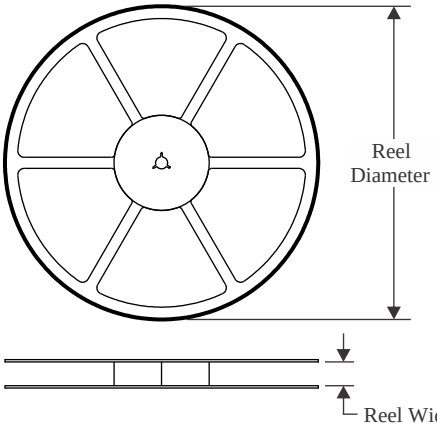


**TAPE DIMENSIONS**

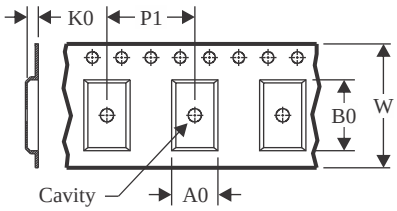


| | |
|---|---|
| A0 | Dimension designed to accommodate the component width |
| B0 | Dimension designed to accommodate the component length |
| K0 | Dimension designed to accommodate the component thickness |
| W | Overall width of the carrier tape |
| P1 | Pitch between successive cavity centers |

**QUADRANT ASSIGNMENTS FOR PIN 1 ORIENTATION IN TAPE**

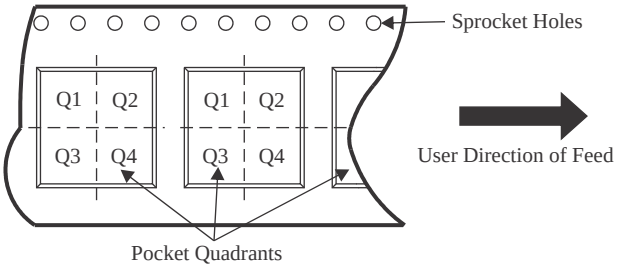


*All dimensions are nominal

| Device | Package Type | Package Drawing | Pins | SPQ | Reel Diameter (mm) | Reel Width W1 (mm) | A0 (mm) | B0 (mm) | K0 (mm) | P1 (mm) | W (mm) | Pin1 Quadrant |
|---|---|---|---|---|---|---|---|---|---|---|---|---|
| ADS7254IPWR | TSSOP | PW | 16 | 2000 | 330.0 | 12.4 | 6.9 | 5.6 | 1.6 | 8.0 | 12.0 | Q1 |
| ADS7254IRTER | WQFN | RTE | 16 | 3000 | 330.0 | 12.4 | 3.3 | 3.3 | 1.1 | 8.0 | 12.0 | Q2 |
| ADS7254IRTET | WQFN | RTE | 16 | 250 | 180.0 | 12.4 | 3.3 | 3.3 | 1.1 | 8.0 | 12.0 | Q2 |
| ADS7854IPWR | TSSOP | PW | 16 | 2000 | 330.0 | 12.4 | 6.9 | 5.6 | 1.6 | 8.0 | 12.0 | Q1 |
| ADS7854IRTER | WQFN | RTE | 16 | 3000 | 330.0 | 12.4 | 3.3 | 3.3 | 1.1 | 8.0 | 12.0 | Q2 |
| ADS7854IRTET | WQFN | RTE | 16 | 250 | 180.0 | 12.4 | 3.3 | 3.3 | 1.1 | 8.0 | 12.0 | Q2 |
| ADS8354IPWR | TSSOP | PW | 16 | 2000 | 330.0 | 12.4 | 6.9 | 5.6 | 1.6 | 8.0 | 12.0 | Q1 |
| ADS8354IRTER | WQFN | RTE | 16 | 3000 | 330.0 | 12.4 | 3.3 | 3.3 | 1.1 | 8.0 | 12.0 | Q2 |
| ADS8354IRTET | WQFN | RTE | 16 | 250 | 180.0 | 12.4 | 3.3 | 3.3 | 1.1 | 8.0 | 12.0 | Q2 |
| ADS8354IRTETG4 | WQFN | RTE | 16 | 250 | 180.0 | 12.4 | 3.3 | 3.3 | 1.1 | 8.0 | 12.0 | Q2 |

TAPE AND REEL BOX DIMENSIONS

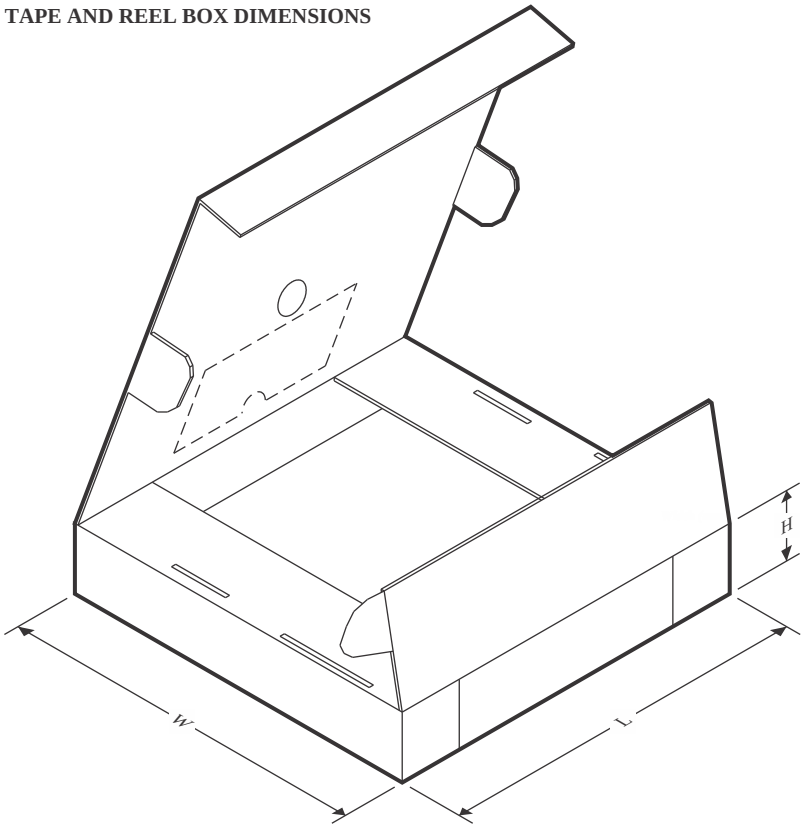


*All dimensions are nominal

| Device | Package Type | Package Drawing | Pins | SPQ | Length (mm) | Width (mm) | Height (mm) |
|---|---|---|---|---|---|---|---|
| ADS7254IPWR | TSSOP | PW | 16 | 2000 | 367.0 | 367.0 | 35.0 |
| ADS7254IRTER | WQFN | RTE | 16 | 3000 | 367.0 | 367.0 | 35.0 |
| ADS7254IRTET | WQFN | RTE | 16 | 250 | 213.0 | 191.0 | 35.0 |
| ADS7854IPWR | TSSOP | PW | 16 | 2000 | 367.0 | 367.0 | 35.0 |
| ADS7854IRTER | WQFN | RTE | 16 | 3000 | 367.0 | 367.0 | 35.0 |
| ADS7854IRTET | WQFN | RTE | 16 | 250 | 210.0 | 185.0 | 35.0 |
| ADS8354IPWR | TSSOP | PW | 16 | 2000 | 367.0 | 367.0 | 35.0 |
| ADS8354IRTER | WQFN | RTE | 16 | 3000 | 367.0 | 367.0 | 35.0 |
| ADS8354IRTET | WQFN | RTE | 16 | 250 | 213.0 | 191.0 | 35.0 |
| ADS8354IRTETG4 | WQFN | RTE | 16 | 250 | 213.0 | 191.0 | 35.0 |

## TUBE

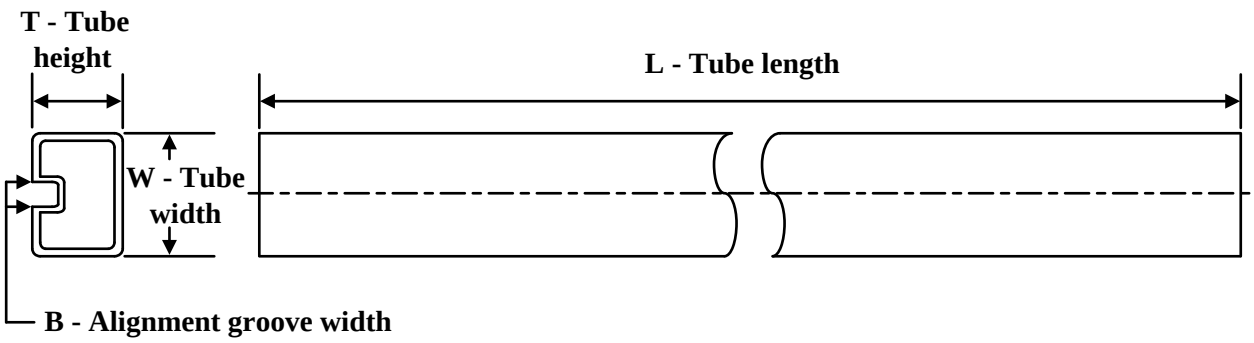


*All dimensions are nominal

| Device | Package Name | Package Type | Pins | SPQ | L (mm) | W (mm) | T (µm) | B (mm) |
|---|---|---|---|---|---|---|---|---|
| ADS7254IPW | PW | TSSOP | 16 | 90 | 530 | 10.2 | 3600 | 3.5 |
| ADS7254IPW.A | PW | TSSOP | 16 | 90 | 530 | 10.2 | 3600 | 3.5 |
| ADS7254IPW.B | PW | TSSOP | 16 | 90 | 530 | 10.2 | 3600 | 3.5 |
| ADS7254IPWG4 | PW | TSSOP | 16 | 90 | 530 | 10.2 | 3600 | 3.5 |
| ADS7254IPWG4.A | PW | TSSOP | 16 | 90 | 530 | 10.2 | 3600 | 3.5 |
| ADS7254IPWG4.B | PW | TSSOP | 16 | 90 | 530 | 10.2 | 3600 | 3.5 |
| ADS7854IPW | PW | TSSOP | 16 | 90 | 530 | 10.2 | 3600 | 3.5 |
| ADS7854IPW.A | PW | TSSOP | 16 | 90 | 530 | 10.2 | 3600 | 3.5 |
| ADS7854IPW.B | PW | TSSOP | 16 | 90 | 530 | 10.2 | 3600 | 3.5 |
| ADS8354IPW | PW | TSSOP | 16 | 90 | 530 | 10.2 | 3600 | 3.5 |
| ADS8354IPW.A | PW | TSSOP | 16 | 90 | 530 | 10.2 | 3600 | 3.5 |
| ADS8354IPW.B | PW | TSSOP | 16 | 90 | 530 | 10.2 | 3600 | 3.5 |
| ADS8354IPWG4 | PW | TSSOP | 16 | 90 | 530 | 10.2 | 3600 | 3.5 |
| ADS8354IPWG4.A | PW | TSSOP | 16 | 90 | 530 | 10.2 | 3600 | 3.5 |
| ADS8354IPWG4.B | PW | TSSOP | 16 | 90 | 530 | 10.2 | 3600 | 3.5 |

# GENERIC PACKAGE VIEW

## RTE 16

## WQFN - 0.8 mm max height

**3 x 3, 0.5 mm pitch**

PLASTIC QUAD FLATPACK - NO LEAD

This image is a representation of the package family, actual package may vary.
Refer to the product data sheet for package details.

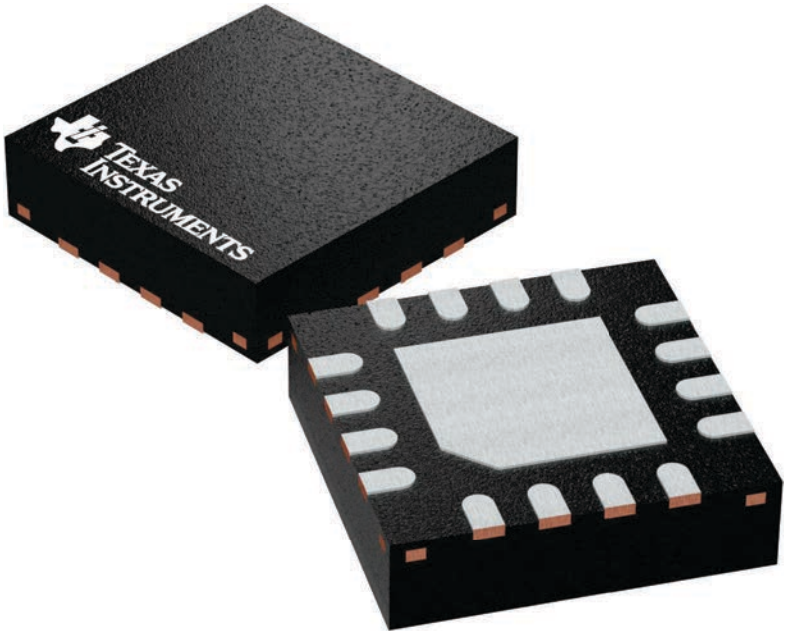


4225944/A

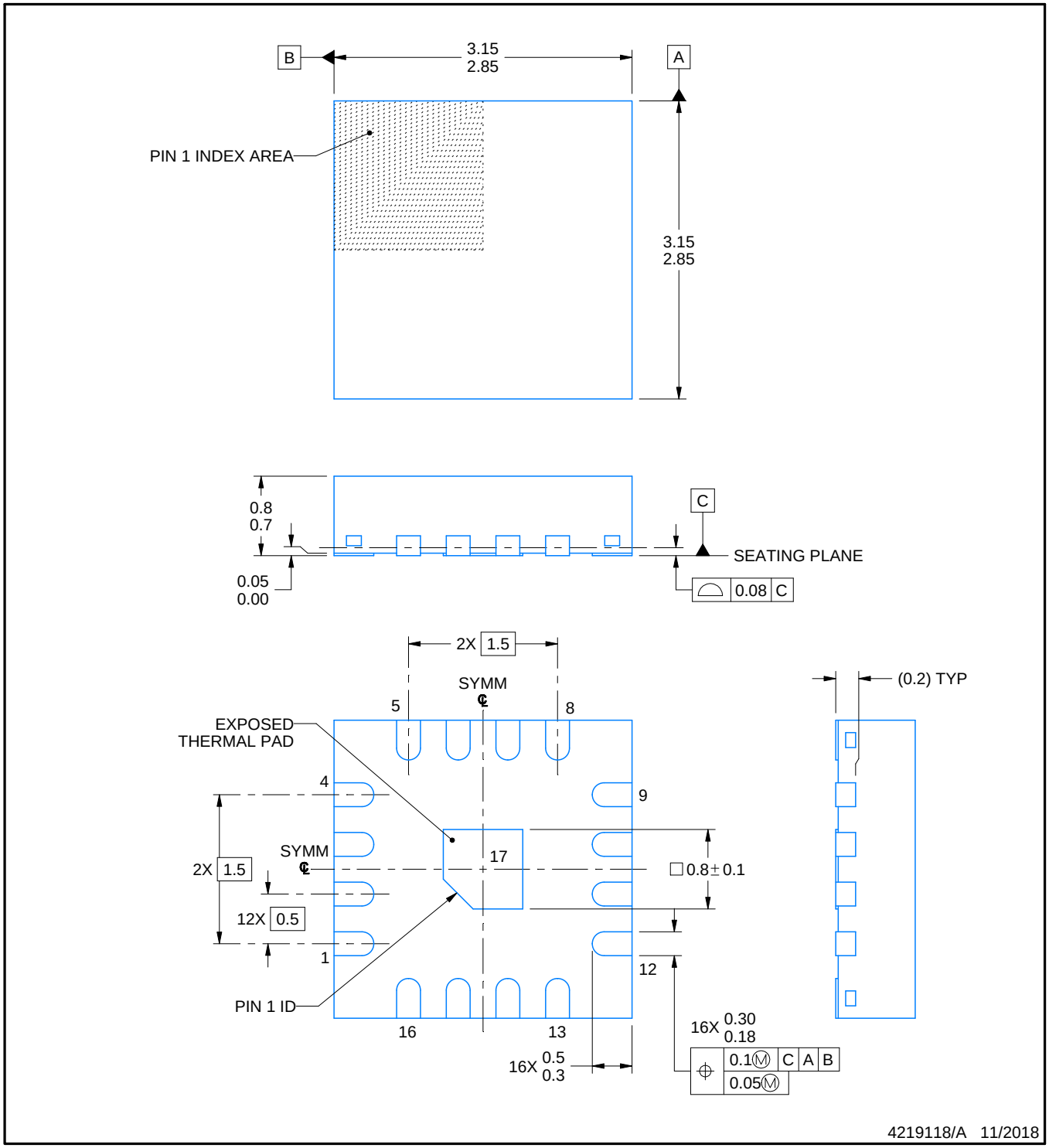


4219118/A 11/2018

NOTES:

1. All linear dimensions are in millimeters. Any dimensions in parenthesis are for reference only. Dimensioning and tolerancing per ASME Y14.5M.
2. This drawing is subject to change without notice.
3. The package thermal pad must be soldered to the printed circuit board for thermal and mechanical performance.

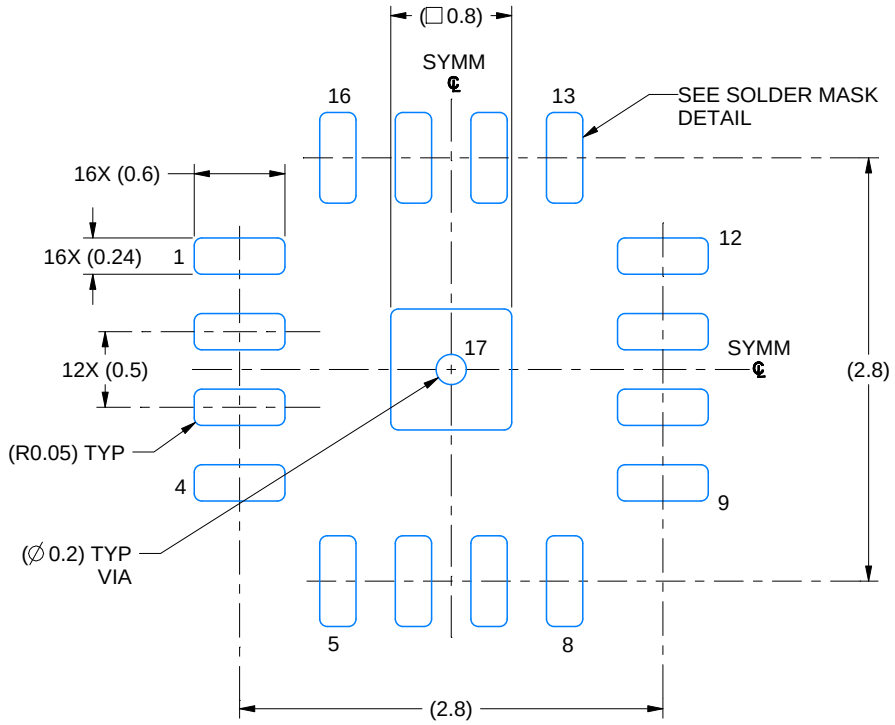


LAND PATTERN EXAMPLE
EXPOSED METAL SHOWN
SCALE: 20X

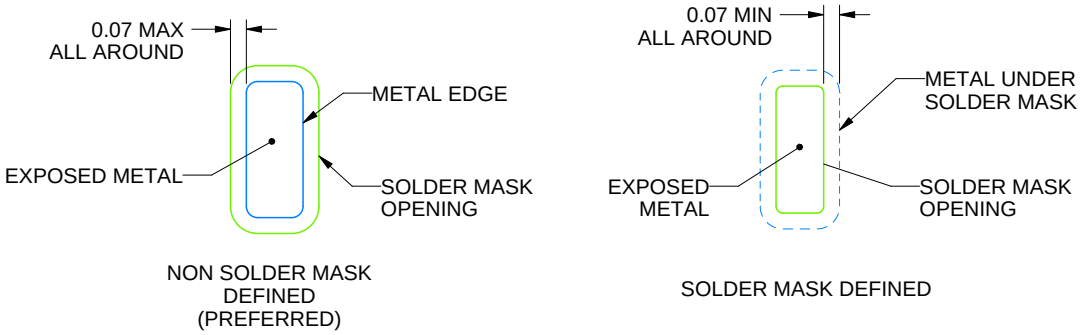


SOLDER MASK DETAILS

4219118/A 11/2018

NOTES: (continued)

4. This package is designed to be soldered to a thermal pad on the board. For more information, see Texas Instruments literature number SLUA271 (www.ti.com/lit/slua271).
5. Vias are optional depending on application, refer to device data sheet. If any vias are implemented, refer to their locations shown on this view. It is recommended that vias under paste be filled, plugged or tented.

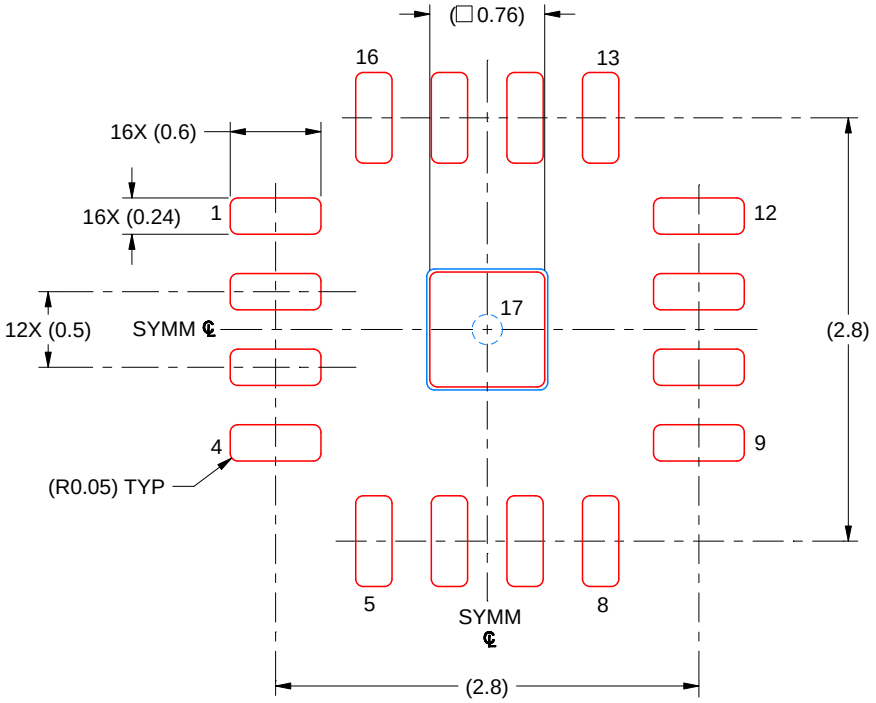


SOLDER PASTE EXAMPLE
BASED ON 0.125 MM THICK STENCIL
SCALE: 20X

EXPOSED PAD 17
90% PRINTED SOLDER COVERAGE BY AREA UNDER PACKAGE

4219118/A 11/2018

NOTES: (continued)

6. Laser cutting apertures with trapezoidal walls and rounded corners may offer better paste release. IPC-7525 may have alternate design recommendations.

# PW0016A

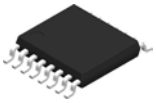

# PACKAGE OUTLINE

## TSSOP - 1.2 mm max height

SMALL OUTLINE PACKAGE

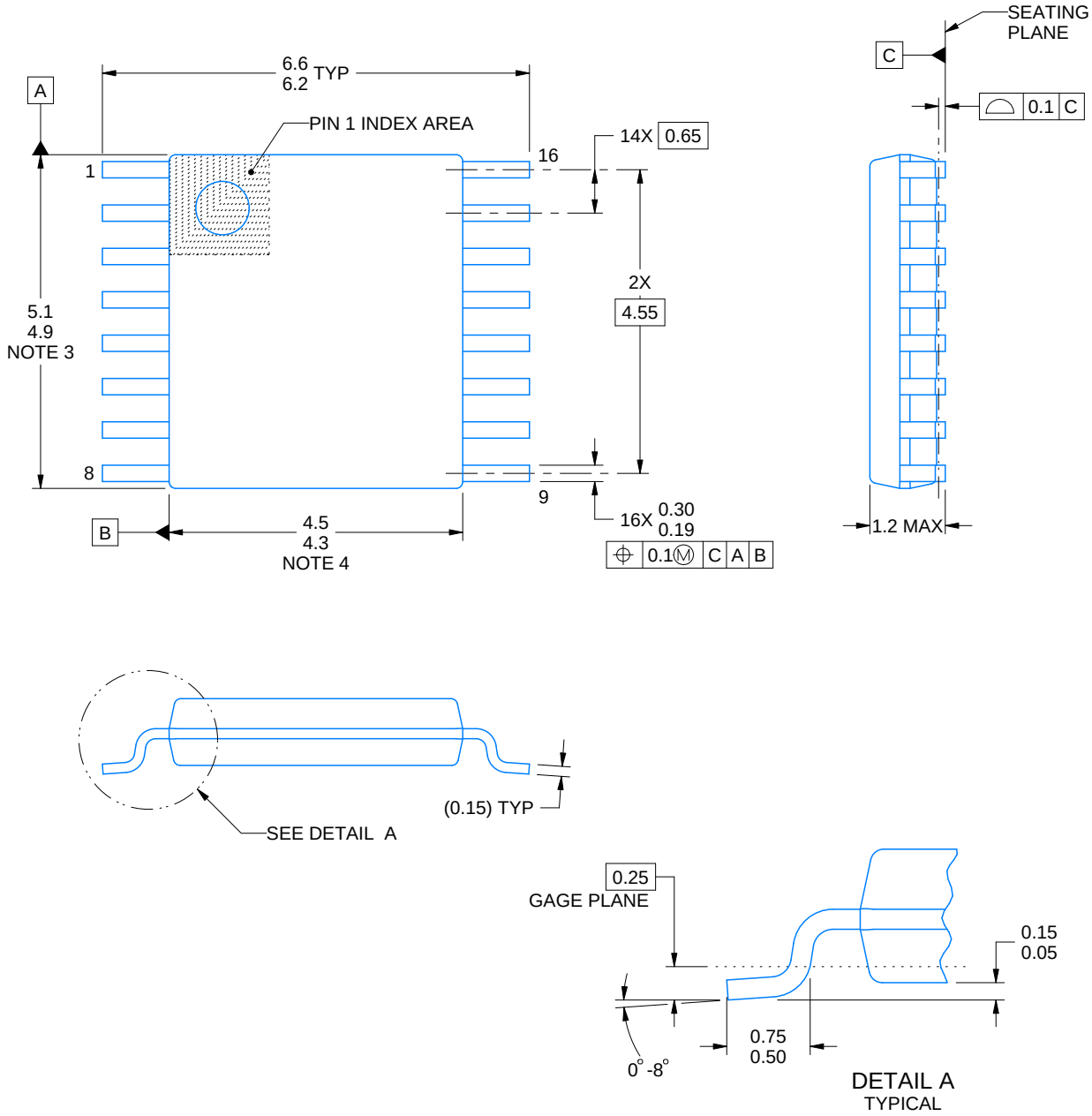


NOTES:

1. All linear dimensions are in millimeters. Any dimensions in parenthesis are for reference only. Dimensioning and tolerancing per ASME Y14.5M.
2. This drawing is subject to change without notice.
3. This dimension does not include mold flash, protrusions, or gate burrs. Mold flash, protrusions, or gate burrs shall not exceed 0.15 mm per side.
4. This dimension does not include interlead flash. Interlead flash shall not exceed 0.25 mm per side.
5. Reference JEDEC registration MO-153.

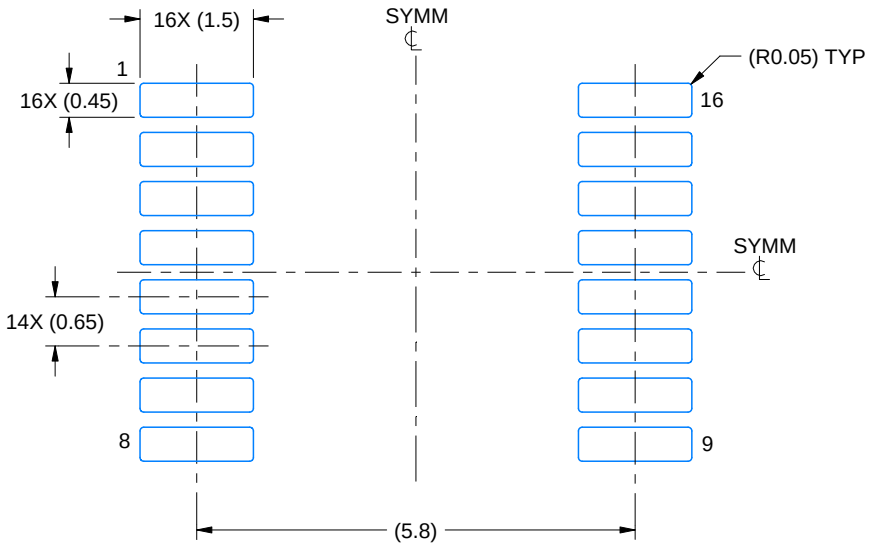


LAND PATTERN EXAMPLE
EXPOSED METAL SHOWN
SCALE: 10X

NON-SOLDER MASK DEFINED (PREFERRED)

SOLDER MASK DEFINED

SOLDER MASK DETAILS

4220204/A 02/2017

NOTES: (continued)

6. Publication IPC-7351 may have alternate designs.
7. Solder mask tolerances between and around signal pads can vary based on board fabrication site.

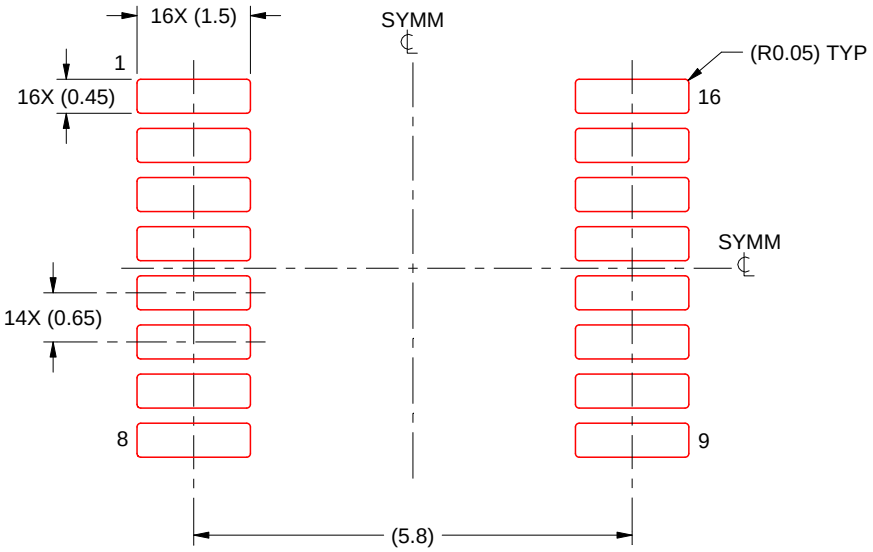


SOLDER PASTE EXAMPLE
BASED ON 0.125 mm THICK STENCIL
SCALE: 10X

4220204/A 02/2017

NOTES: (continued)

8. Laser cutting apertures with trapezoidal walls and rounded corners may offer better paste release. IPC-7525 may have alternate design recommendations.
9. Board assembly site may have different recommendations for stencil design.

# IMPORTANT NOTICE AND DISCLAIMER

TI PROVIDES TECHNICAL AND RELIABILITY DATA (INCLUDING DATA SHEETS), DESIGN RESOURCES (INCLUDING REFERENCE DESIGNS), APPLICATION OR OTHER DESIGN ADVICE, WEB TOOLS, SAFETY INFORMATION, AND OTHER RESOURCES “AS IS” AND WITH ALL FAULTS, AND DISCLAIMS ALL WARRANTIES, EXPRESS AND IMPLIED, INCLUDING WITHOUT LIMITATION ANY IMPLIED WARRANTIES OF MERCHANTABILITY, FITNESS FOR A PARTICULAR PURPOSE OR NON-INFRINGEMENT OF THIRD PARTY INTELLECTUAL PROPERTY RIGHTS.

These resources are intended for skilled developers designing with TI products. You are solely responsible for (1) selecting the appropriate TI products for your application, (2) designing, validating and testing your application, and (3) ensuring your application meets applicable standards, and any other safety, security, regulatory or other requirements.

These resources are subject to change without notice. TI grants you permission to use these resources only for development of an application that uses the TI products described in the resource. Other reproduction and display of these resources is prohibited. No license is granted to any other TI intellectual property right or to any third party intellectual property right. TI disclaims responsibility for, and you will fully indemnify TI and its representatives against, any claims, damages, costs, losses, and liabilities arising out of your use of these resources.

TI’s products are provided subject to TI’s Terms of Sale or other applicable terms available either on ti.com or provided in conjunction with such TI products. TI’s provision of these resources does not expand or otherwise alter TI’s applicable warranties or warranty disclaimers for TI products.

TI objects to and rejects any additional or different terms you may have proposed.

Mailing Address: Texas Instruments, Post Office Box 655303, Dallas, Texas 75265
Copyright © 2025, Texas Instruments Incorporated