LP5521 Three-Channel RGB, White-LED Driver With Internal Program Memory and Integrated Charge Pump

1 Features

- Adaptive Charge Pump With 1× and 1.5× Gain Provides Up to 95% LED Drive Efficiency
- Charge Pump with Soft Start and Overcurrent, Short-Circuit Protection
- Low Input Ripple and EMI
- Very Small Solution Size, No Inductor or Resistors Required
- 200-nA Typical Shutdown Current
- Automatic Power Save Mode
- I^2C-Compatible Interface
- Independently Programmable Constant Current Outputs with 8-Bit Current Setting and 8-Bit PWM Control
- Typical LED Output Saturation Voltage 50 mV and Current Matching 1%
- Three Program Execution Engines with Flexible Instruction Set
- Autonomous Operation Without External Control
- Large SRAM Program Memory
- Two General Purpose Digital Outputs

2 Applications

- Fun and Indicator Lights
- LCD Sub-Display Backlighting
- Keypad RGB Backlighting and Phone Cosmetics
- Vibra, Speakers, Waveform Generator
- Blood Glucose Meter
- Handheld POS Terminals
- Electronic Access Control
- Where RGB Indication is Needed

Typical Application Circuit

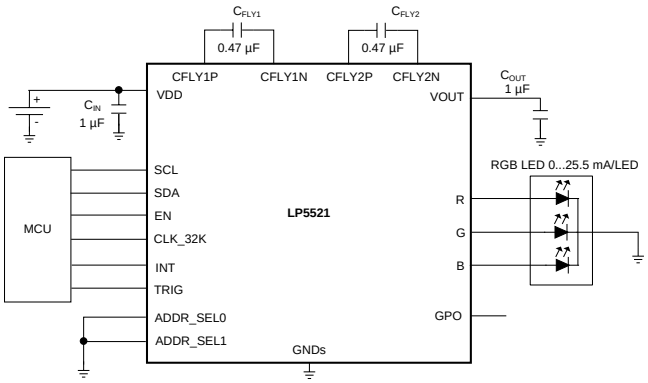

Copyright © 2016, Texas Instruments Incorporated

3 Description

The LP5521 is a three-channel LED driver designed to produce variety of lighting effects for mobile devices. A high-efficiency charge pump enables LED driving over full Li-Ion battery voltage range. The device has a program memory for creating variety of lighting sequences. When program memory has been loaded, LP5521 can operate autonomously without processor control allowing power savings.

The device maintains excellent efficiency over a wide operating range by automatically selecting proper charge pump gain based on LED forward voltage requirements and is able to automatically enter power-save mode, when LED outputs are not active and thus lowering current consumption.

Three independent LED channels have accurate programmable current sources and PWM control. Each channel has program memory for creating desired lighting sequences with PWM control.

The LP5521 has a flexible digital interface. Trigger I/O and a 32-kHz clock input allow synchronization between multiple devices. Interrupt output can be used to notify processor, when LED sequence has ended. The LP5521 has four pin selectable I^2C-compatible addresses. This allows connecting up to four parallel devices in one I^2C-compatible bus. GPO and INT pins can be used as a digital control pin for other devices.

The LP5521 requires only four small, low-cost ceramic capacitors.

Comprehensive application tools are available, including command compiler for easy LED sequence programming.

Device Information(1)

PART NUMBER	PACKAGE	BODY SIZE
LP5521TM	DSBGA (20)	2.093 mm × 1.733 mm (MAX)
LP5521YQ	WQFN (24)	5.00 mm × 4.00 mm (NOM)

(1) For all available packages, see the orderable addendum at the end of the data sheet.

An IMPORTANT NOTICE at the end of this data sheet addresses availability, warranty, changes, use in safety-critical applications, intellectual property matters and other important disclaimers. PRODUCTION DATA.

Table of Contents

1 Features ... 1
2 Applications ... 1
3 Description ... 1
4 Revision History ... 2
5 Pin Configuration and Functions ... 3
6 Specifications ... 5
6.1 Absolute Maximum Ratings ... 5
6.2 ESD Ratings ... 5
6.3 Recommended Operating Conditions ... 5
6.4 Thermal Information ... 6
6.5 Electrical Characteristics ... 6
6.6 Charge Pump Electrical Characteristics ... 7
6.7 LED Driver Electrical Characteristics (R, G, B Outputs) ... 7
6.8 Logic Interface Characteristics ... 7
6.9 I^2C Timing Requirements (SDA, SCL) ... 8
6.10 Typical Characteristics ... 9
7 Detailed Description ... 11
7.1 Overview ... 11
7.2 Functional Block Diagram ... 11
7.3 Feature Description ... 12
7.4 Device Functional Modes ... 18
7.5 Programming ... 19
7.6 Register Maps ... 28
8 Application and Implementation ... 36
8.1 Application Information ... 36
8.2 Typical Applications ... 36
8.3 Initialization Setup ... 39
9 Power Supply Recommendations ... 40
10 Layout ... 40
10.1 Layout Guidelines ... 40
10.2 Layout Example ... 40
11 Device and Documentation Support ... 41
11.1 Device Support ... 41
11.2 Documentation Support ... 41
11.3 Receiving Notification of Documentation Updates 41
11.4 Community Resources ... 41
11.5 Trademarks ... 41
11.6 Electrostatic Discharge Caution ... 41
11.7 Glossary ... 41
12 Mechanical, Packaging, and Orderable Information ... 41

4 Revision History

Changes from Revision H (May 2016) to Revision I	Page
• Changed wording of title	1

Changes from Revision G (September 2014) to Revision H	Page
• Added several new *Applications*	1
• Changed Body Size of DSBGA package to MAX dimensions	1
• Changed *Handling Ratings* to *ESD Ratings* table	5
• Changed $R_{\theta JA}$ value for DSBGA from 50 – 90°C/W to 70.7°C/W and WQFN from 37 – 90°C/W to 38.4°C/W; add additional thermal information	6
• Added *Community Resources*	41

Changes from Revision F (February 2013) to Revision G	Page
• Added *Pin Configuration and Functions* section, *Handling Rating* table, *Feature Description* section, *Device Functional Modes*, *Application and Implementation* section, *Power Supply Recommendations* section, *Layout* section, *Device and Documentation Support* section, and *Mechanical, Packaging, and Orderable Information* section	1

Copyright © 2007–2016, Texas Instruments Incorporated

5 Pin Configuration and Functions

YFQ Package
20-Pin DSBGA
Top View

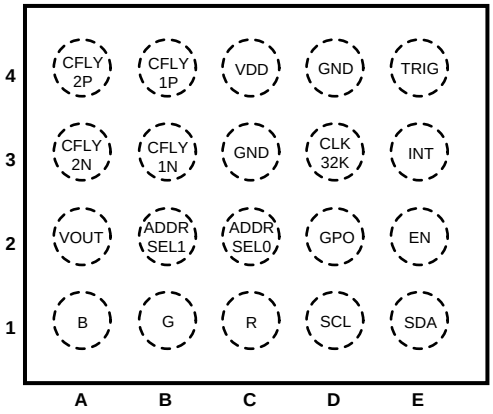

YFQ Package
20-Pin DSBGA
Bottom View

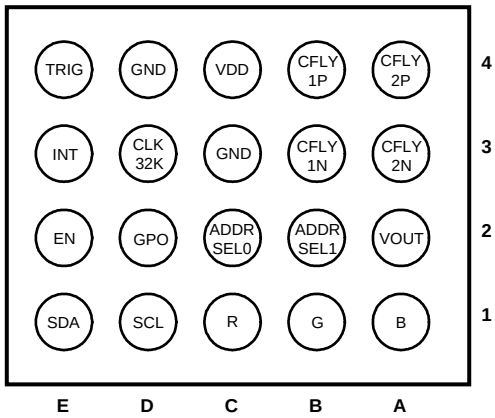

NJA Package
24-Pin WQFN
Top View

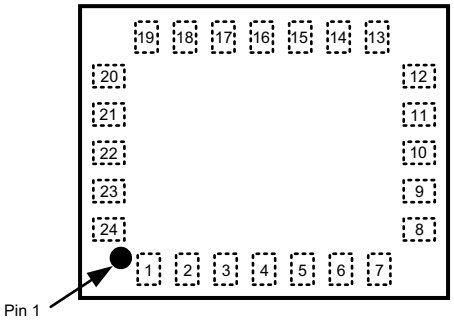

NJA Package
24-Pin WQFN
Bottom View

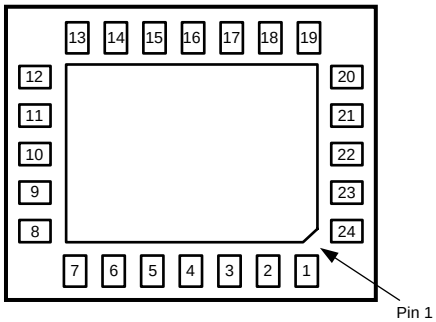

Pin Functions LP5521TM

PIN		TYPE (1)	DESCRIPTION
NUMBER	NAME		
1A	B	A	Current source output
1B	G	A	Current source output
1C	R	A	Current source output
1D	SCL	I	I^2C Serial interface clock input
1E	SDA	I/OD	I^2C Serial interface data input/output
2A	VOUT	A	Charge pump output
2B	ADDR_SEL1	I	I^2C address select input
2C	ADDR_SEL0	I	I^2C address select input
2D	GPO	O	General purpose output
2E	EN	I	Chip enable
3A	CFLY2N	A	Negative terminal of charge pump fly capacitor 2
3B	CFLY1N	A	Negative terminal of charge pump fly capacitor 1
3C	GND	G	Ground
3D	CLK_32K	I	32-kHz clock input

(1) A: Analog Pin, G: Ground Pin, P: Power Pin, I: Input Pin, I/O: Input/Output Pin, O: Output Pin, OD: Open Drain Pin

Copyright © 2007–2016, Texas Instruments Incorporated

Pin Functions LP5521TM (continued)

PIN		TYPE(1)	DESCRIPTION
NUMBER	NAME		
3E	INT	OD/O	Interrupt output / General Purpose Output
4A	CFLY2P	A	Positive terminal of charge pump fly capacitor 2
4B	CFLY1P	A	Positive terminal of charge pump fly capacitor 1
4C	VDD	P	Power supply pin
4D	GND	G	Ground
4E	TRIG	I/OD	Trigger input/output

Pin Functions LP5521YQ

PIN		TYPE(1)	DESCRIPTION
NUMBER	NAME		
1	CFLY2P	A	Positive pin of charge pump fly capacitor 2
2	CFLY1P	A	Positive pin of charge pump fly capacitor 1
3	VDD	P	Power supply pin
4	GND	G	Ground
5	CLK_32K	I	32-kHz clock input
6	INT	OD/O	Interrupt output / General purpose output
7	TRIG	I/OD	Trigger input/output
8		N/C	
9		N/C	
10		N/C	
11		N/C	
12		N/C	
13	SDA	I/OD	I^2C serial interface data input/output
14	EN	I	Chip enable
15	SCL	I	I^2C Serial interface clock input
16	GPO	O	General purpose output
17	R	A	Current source output
18	G	A	Current source output
19	B	A	Current source output
20	ADDR_SEL0	I	I^2C address select input
21	ADDR_SEL1	I	I^2C address select input
22	VOUT	A	Charge pump output
23	CFLY2N	A	Negative pin of charge pump fly capacitor 2
24	CFLY1N	A	Negative pin of charge pump fly capacitor 1

(1) A: Analog Pin, G: Ground Pin, P: Power Pin, I: Input Pin, I/O: Input/Output Pin, O: Output Pin, OD: Open Drain Pin

Copyright © 2007–2016, Texas Instruments Incorporated

6 Specifications

6.1 Absolute Maximum Ratings

over operating free-air temperature range (unless otherwise noted)[(1)(2)(2)(3)]

	MIN	MAX	UNIT
V (V_{DD} , V_{OUT}, R, G, B)	–0.3	6	V
Voltage on logic pins	–0.3	V_{DD} + 0.3 with 6 V maximum	V
Continuous power dissipation[(4)]		Internally Limited	
Junction temperature, T_{J-MAX}		125	°C
Maximum lead temperature (soldering)	See[(5)]		
Storage temperature, T_{stg}	–65	150	°C

(1) Stresses beyond those listed under *Absolute Maximum Ratings* may cause permanent damage to the device. These are stress ratings only, and functional operation of the device at these or any other conditions beyond those indicated under *Recommended Operating Conditions* is not implied. Exposure to absolute-maximum-rated conditions for extended periods may affect device reliability.
(2) All voltages are with respect to the potential at the GND pins.
(3) If Military/Aerospace specified devices are required, contact the Texas Instruments Sales Office/ Distributors for availability and specifications.
(4) Internal thermal shutdown circuitry protects the device from permanent damage. Thermal shutdown engages at T_J = 150°C (typical) and disengages at T_J = 130°C (typical).
(5) For detailed soldering specifications and information, please refer to *DSBGA Wafer Level Chip Scale Package* (SNVA009) or *Leadless Leadframe Package (LLP)* (SNOA401).

6.2 ESD Ratings

			VALUE	UNIT
$V_{(ESD)}$	Electrostatic discharge	Human-body model (HBM), per ANSI/ESDA/JEDEC JS-001[(1)]	±2000	V
		Charged-device model (CDM), per JEDEC specification JESD22-C101[(2)]	±200	

(1) JEDEC document JEP155 states that 500-V HBM allows safe manufacturing with a standard ESD control process.
(2) JEDEC document JEP157 states that 250-V CDM allows safe manufacturing with a standard ESD control process.

6.3 Recommended Operating Conditions

over operating free-air temperature range (unless otherwise noted)[(1)(2)(2)]

	MIN	MAX	UNIT
V_{DD}	2.7	5.5	V
Recommended charge pump load current I_{OUT}	0	100	mA
Junction temperature, T_J,	–30	125	°C
Ambient temperature, T_A[(3)]	–30	85	°C

(1) Stresses beyond those listed under *Absolute Maximum Ratings* may cause permanent damage to the device. These are stress ratings only, and functional operation of the device at these or any other conditions beyond those indicated under *Recommended Operating Conditions* is not implied. Exposure to absolute-maximum-rated conditions for extended periods may affect device reliability.
(2) All voltages are with respect to the potential at the GND pins.
(3) In applications where high power dissipation and/or poor package thermal resistance is present, the maximum ambient temperature may have to be derated. Maximum ambient temperature (T_{A-MAX}) is dependent on the maximum operating junction temperature ($T_{J-MAX-OP}$ = 125°C), the maximum power dissipation of the device in the application (P_{D-MAX}), and the junction-to ambient thermal resistance of the part/package in the application ($R_{\theta JA}$), as given by the following equation: $T_{A-MAX} = T_{J-MAX-OP} – (R_{\theta JA} \times P_{D-MAX})$.

6.4 Thermal Information

THERMAL METRIC[1]		LP5521		UNIT
		YFQ (DSBGA)	NJA (WQFN)	
		20 PINS	24 PINS	
$R_{\theta JA}$	Junction-to-ambient thermal resistance	70.7	38.4	°C/W
$R_{\theta JC(top)}$	Junction-to-case (top) thermal resistance	0.5	27.3	°C/W
$R_{\theta JB}$	Junction-to-board thermal resistance	12.1	15.4	°C/W
ψ_{JT}	Junction-to-top characterization parameter	0.2	0.2	°C/W
ψ_{JB}	Junction-to-board characterization parameter	12.0	15.4	°C/W
$R_{\theta JC(bot)}$	Junction-to-case (bottom) thermal resistance	n/a	3.1	°C/W

(1) For more information about traditional and new thermal metrics, see the *Semiconductor and IC Package Thermal Metrics* application report, SPRA953.

6.5 Electrical Characteristics

Unless otherwise noted, specifications apply to the LP5521 *Functional Block Diagram* with: 2.7 V ≤ V_{DD} ≤ 5.5 V, C_{OUT}= C_{IN} = 1 µF, C_{FLY1} = C_{FLY2} = 0.47 µF; limits are for T_J = 25°C unless specified in the test conditions.[1][2][3]

SYMBOL	PARAMETER	TEST CONDITIONS	MIN	TYP	MAX	UNIT
I_{VDD}	Standby supply current	EN = 0 (pin), CHIP_EN = 0 (bit), external 32 kHz clock running or not running		0.2		µA
		EN = 0 (pin), CHIP_EN = 0 (bit), external 32-kHz clock running or not running, –30°C < T_A < 85°C			2	µA
		EN = 1 (pin), CHIP_EN = 0 (bit), external 32-kHz clock not running		1		µA
		EN = 1 (pin), CHIP_EN = 0 (bit), external 32-kHz clock running		1.4		µA
	Normal mode supply current	Charge pump and LED drivers disabled		0.25		mA
		Charge pump in 1x mode, no load, LED drivers disabled		0.7		mA
		Charge pump in 1.5x mode, no load, LED drivers disabled		1.5		mA
		Charge pump in 1x mode, no load, LED drivers enabled		1.2		mA
	Powersave mode supply current	External 32-kHz clock running		10		µA
		Internal oscillator running		0.25		mA
f_{OSC}	Internal oscillator frequency accuracy		–4%		4%	
		–30°C < T_A < 85°C	–7%		7%	

(1) All voltages are with respect to the potential at the GND pins.
(2) Minimum and Maximum limits are specified by design, test, or statistical analysis.
(3) Low-ESR Surface-Mount Ceramic Capacitors (MLCCs) used in setting electrical characteristics.

Copyright © 2007–2016, Texas Instruments Incorporated

6.6 Charge Pump Electrical Characteristics

Limits are for T_J = 25°C unless specified in the test conditions.(1)

SYMBOL	PARAMETER	TEST CONDITION	MIN	TYP	MAX	UNIT
R_{OUT}	Charge pump output resistance	Gain = 1.5×		3.5		Ω
		Gain = 1×		1		Ω
f_{SW}	Switching frequency			1.25		MHz
		–30°C < T_A < 85°C	–7%		7%	
I_{GND}	Ground current	Gain = 1.5×		1.2		mA
		Gain = 1×		0.5		mA
t_{ON}	V_{OUT} turn-on time from charge pump off to 1.5x mode	V_{DD} = 3.6 V, CHIP_EN = H I_{OUT} = 60 mA		100		µs
V_{OUT}	Charge pump output voltage	V_{DD} = 3.6 V, no load, Gain = 1.5×		4.55		V

(1) Input, output, and fly capacitors should be of the type X5R or X7R low ESR ceramic capacitor.

6.7 LED Driver Electrical Characteristics (R, G, B Outputs)

Limits are for T_J = 25°C unless specified in the test conditions.

SYMBOL	PARAMETER	TEST CONDITION	MIN	TYP	MAX	UNIT
$I_{LEAKAGE}$	R, G, B pin leakage current			0.1		µA
		–30°C < T_A < 85°C			1	
I_{MAX}	Maximum source current	Outputs R, G, B		25.5		mA
I_{OUT}	Accuracy of output current	Output current set to 17.5 mA, V_{DD} = 3.6 V	–4%		4%	
		Output current set to 17.5 mA, V_{DD} = 3.6 V, –30°C < T_A < 85°C	–5%		5%	
I_{MATCH}	Matching(1)	I_{OUT} = 17.5 mA, V_{DD} = 3.6 V		1%	2%	
f_{LED}	LED PWM switching frequency	PWM_HF = 1 Frequency defined by internal oscillator		558		Hz
		PWM_HF = 0 Frequency defined by 32-kHz clock (internal or external)		256		Hz
V_{SAT}	Saturation voltage(2)	I_{OUT} set to 17.5 mA		50	100	mV

(1) Matching is the maximum difference from the average of the three output's currents.
(2) Saturation voltage is defined as the voltage when the LED current has dropped 10% from the value measured at V_{OUT} – 1 V.

6.8 Logic Interface Characteristics

(V(EN) = 1.65 V...V_{DD}, and limits apply through ambient temperature range –30°C < T_A < +85°C, unless otherwise noted.

PARAMETER		TEST CONDITIONS	MIN	TYP	MAX	UNIT
LOGIC INPUT EN						
V_{IL}	Input low level				0.5	V
V_{IH}	Input high level		1.2			V
I_I	Logic input current		–1		1	µA
t_{DELAY}	Input delay (1)	T_J = 25°C		2		µs

(1) The I^2C-compatible host should allow at least 1 ms before sending data to the LP5521 after the rising edge of the enable line.

Logic Interface Characteristics (continued)

(V(EN) = 1.65 V...V_{DD}, and limits apply through ambient temperature range –30°C < T_A < +85°C, unless otherwise noted.

PARAMETER		TEST CONDITIONS	MIN	TYP	MAX	UNIT
LOGIC INPUT SCL, SDA, TRIG, CLK_32K						
V_{IL}	Input low level				0.2 × V(EN)	V
V_{IH}	Input high level		0.8 × V(EN)			V
I_I	Input current		–1		1	µA
f_{CLK_32K}	Clock frequency	T_J = 25°C		32		kHz
f_{SCL}	Clock frequency				400	kHz
LOGIC OUTPUT SDA, TRIG, INT						
		I_{OUT} = 3 mA (pullup current), T_J = 25°C		0.3		
V_{OL}	Output low level	I_{OUT} = 3 mA (pull-up current)			0.5	V
I_L	Output leakage current				1	µA
LOGIC INPUT ADDR_SEL0, ADDR_SEL1						
V_{IL}	Input low level				0.2 × V_{DD}	V
V_{IH}	Input high level		0.8 × V_{DD}			V
I_I	Input current		–1		1	µA
LOGIC OUTPUT GPO, INT (IN GPO STATE)						
		I_{OUT} = 3 mA, T_J = 25°C		0.3		
V_{OL}	Output low level	I_{OUT} = 3 mA			0.5	V
		T_J = 25°C		V_{DD} – 0.3		
V_{OH}	Output high level	I_{OUT} = –2 mA	V_{DD} – 0.5			V
I_L	Output leakage current				1	µA

6.9 I²C Timing Requirements (SDA, SCL)

Limits are for T_J = 25°C(1)

		MIN	MAX	UNIT
f_{SCL}	Clock frequency		400	kHz
1	Hold time (repeated) START condition	0.6		µs
2	Clock low time	1.3		µs
3	Clock high time	600		ns
4	Setup time for a repeated START condition	600		ns
5	Data hold time	50		ns
6	Data set-up time	100		ns
7	Rise time of SDA and SCL	20+0.1C_b	300	ns
8	Fall time of SDA and SCL	15+0.1C_b	300	ns
9	Set-up time for STOP condition	600		ns
10	Bus-free time between a STOP and a START condition	1.3		µs
C_b	Capacitive load for each bus line	10	200	pF

(1) Verified by design.

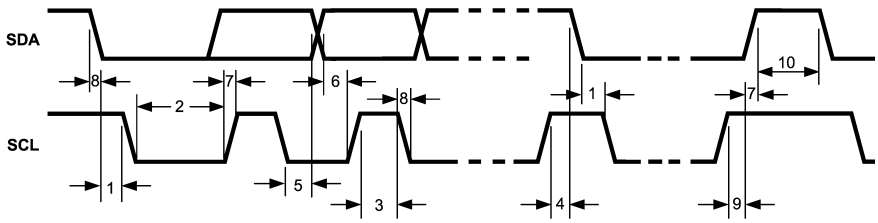

Figure 1. I²C Timing Diagram

Copyright © 2007–2016, Texas Instruments Incorporated

6.10 Typical Characteristics

Unless otherwise specified: V_{DD} = 3.6 V

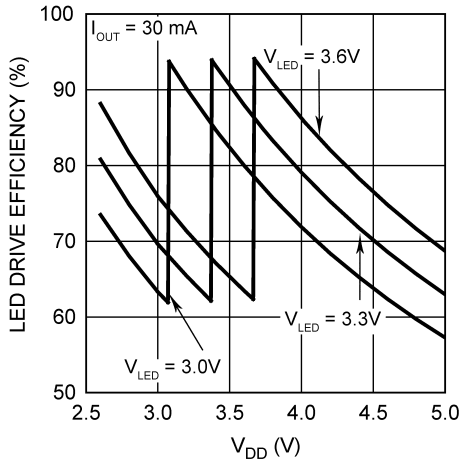

Figure 2. LED Drive Efficiency vs Input Voltage Automatic Gain Change

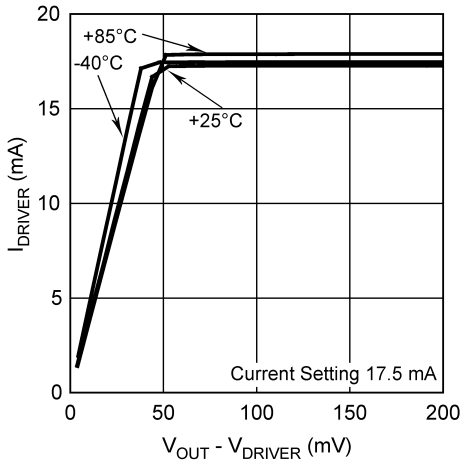

Figure 3. LED Current vs Output Pin Headroom Voltage

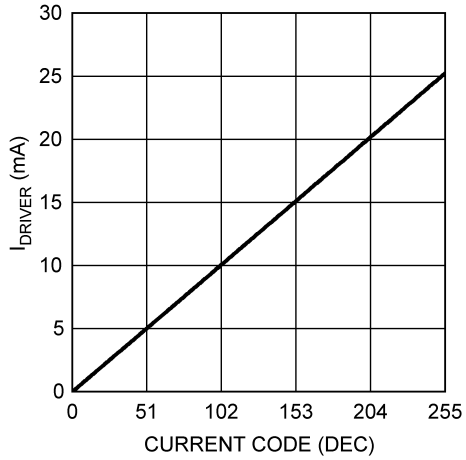

Figure 4. LED Current vs Current Register Code

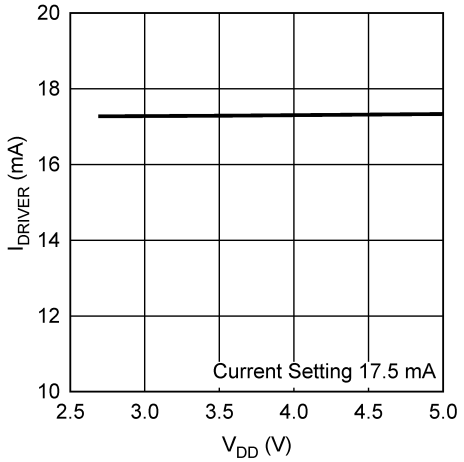

Figure 5. LED Current vs Supply Voltage

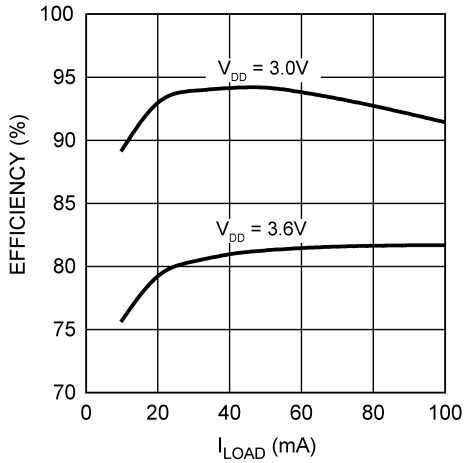

Figure 6. Charge Pump Efficiency vs Load Current

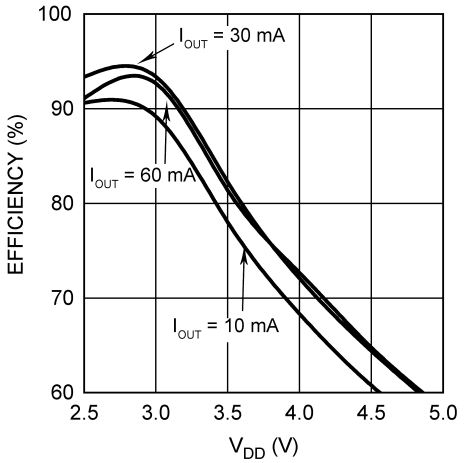

Figure 7. Charge Pump Efficiency vs Input Voltage 1.5x Mode

Typical Characteristics (continued)

Unless otherwise specified: V_{DD} = 3.6 V

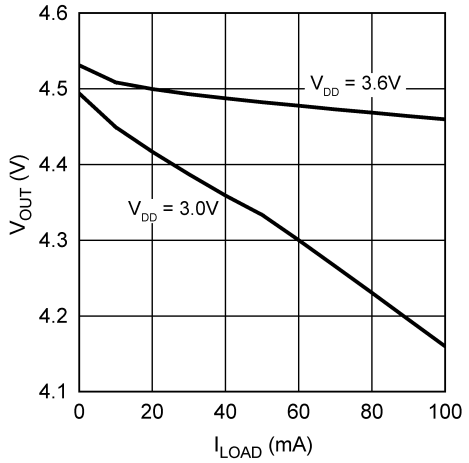

Figure 8. Charge Pump Output Voltage vs Load Current

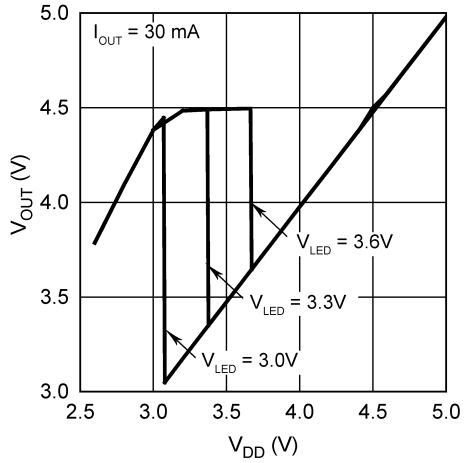

Figure 9. Charge Pump Output Voltage vs Input Voltage Automatic Gain Change from 1x to 1.5x

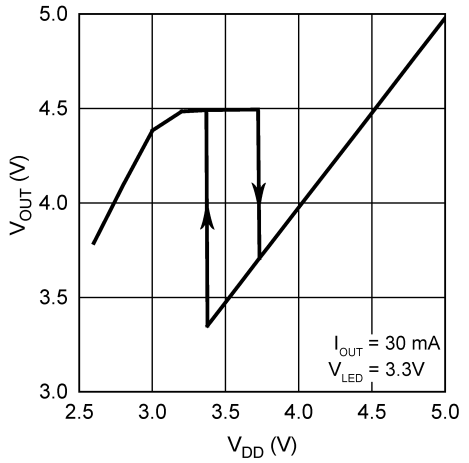

Figure 10. Charge Pump Automatic Gain Change Hysteresis

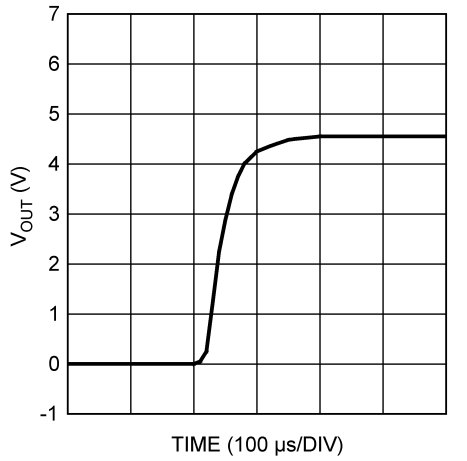

Figure 11. Charge Pump Start-Up in 1.5× Mode: No Load

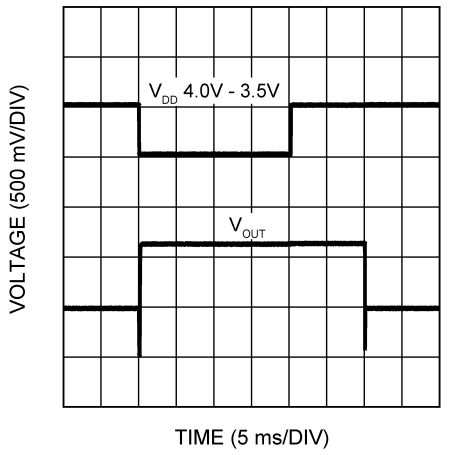

Figure 12. Charge Pump Automatic Gain Change (LED V_F = 3.6 V)

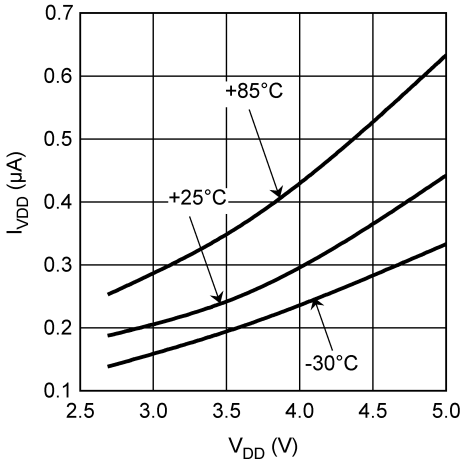

Figure 13. Standby Current vs Input Voltage

Copyright © 2007–2016, Texas Instruments Incorporated

7 Detailed Description

7.1 Overview

The LP5521 is a three-channel LED driver designed to produce variety of lighting effects for mobile devices. A high-efficiency charge pump enables LED driving over full Li-Ion battery voltage range. The device has a program memory for creating variety of lighting sequences. When program memory has been loaded, the LP5521 can operate autonomously without processor control allowing power savings.

The device maintains excellent efficiency over a wide operating range by automatically selecting proper charge pump gain based on LED forward voltage requirements. the LP5521 is able to automatically enter power-save mode, when LED outputs are not active and thus lowering current consumption.

Three independent LED channels have accurate programmable current sources and PWM control. Each channel has program memory for creating desired lighting sequences with PWM control.

The LP5521 has a flexible digital interface. A trigger I/O and 32-kHz clock input allow synchronization between multiple devices. Interrupt output can be used to notify processor, when LED sequence has ended. LP5521 has four pin-selectable I^2C-compatible addresses. This allows connecting up to four parallel devices in one I^2C-compatible bus. GPO and INT pins can be used as a digital control pin for other devices.

The LP5521 requires only four small and low-cost ceramic capacitors.

Comprehensive application tools are available, including command compiler for easy LED sequence programming.

7.2 Functional Block Diagram

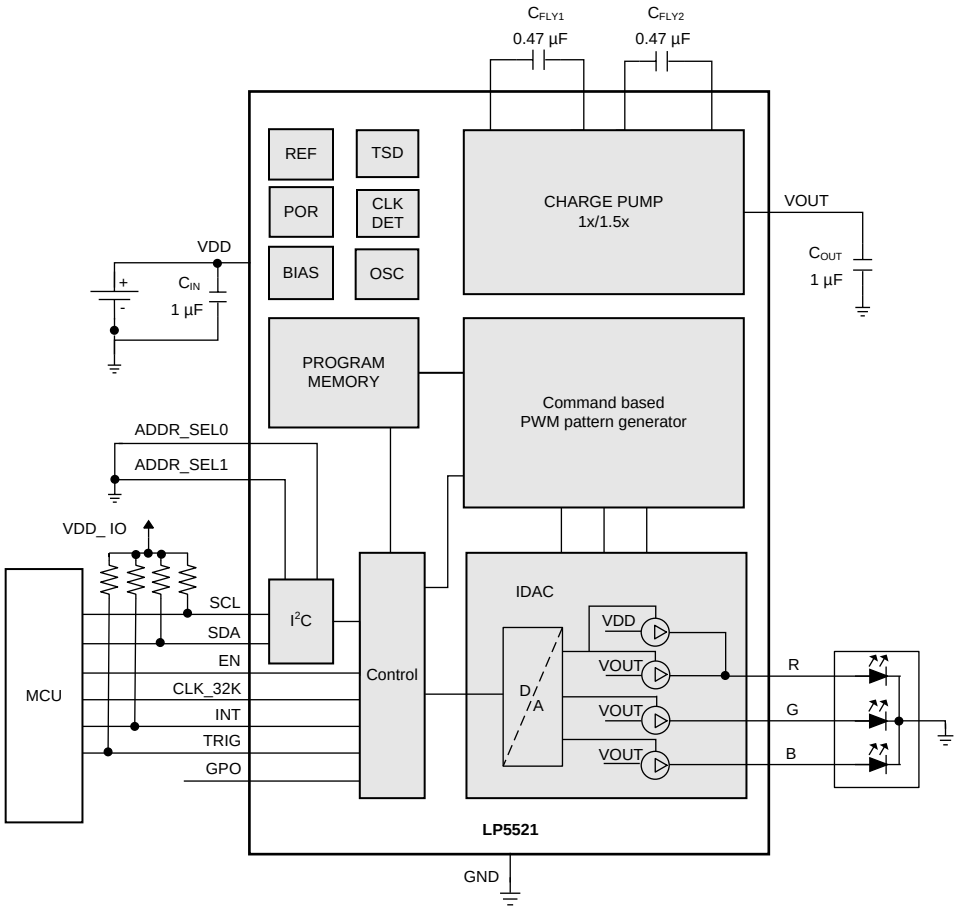

Copyright © 2016, Texas Instruments Incorporated

7.3 Feature Description

7.3.1 Charge Pump Operational Description

The LP5521 includes a pre-regulated switched-capacitor charge pump with a programmable voltage multiplication of 1 and 1.5×.

In 1.5× mode by combining the principles of a switched-capacitor charge pump and a linear regulator, the device generates a regulated 4.5-V output from Li-Ion input voltage range. A two-phase non-overlapping clock generated internally controls the operation of the charge pump. During the charge phase, both flying capacitors (C_{FLY1} and C_{FLY2}) are charged from input voltage. In the pump phase that follows, the flying capacitors are discharged to output. A traditional switched capacitor charge pump operating in this manner uses switches with very low on-resistance, ideally 0 Ω, to generate an output voltage that is 1.5× the input voltage. The LP5521 regulates the output voltage by controlling the resistance of the input-connected pass-transistor switches in the charge pump.

7.3.1.1 Output Resistance

At lower input voltages, the charge pump output voltage may degrade due to effective output resistance (R_{OUT}) of the charge pump. The expected voltage drop can be calculated by using a simple model for the charge pump shown in Figure 14.

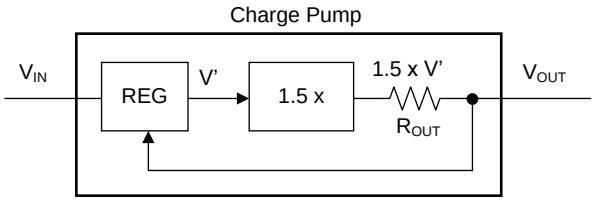

Copyright © 2016, Texas Instruments Incorporated

Figure 14. Charge Pump Block Diagram

The model shows a linear pre-regulation block (REG), a voltage multiplier (1.5×), and an output resistance (R_{OUT}). Output resistance models the output voltage drop that is inherent to switched capacitor converters. The output resistance is 3.5 Ω (typical) and is function of switching frequency, input voltage, capacitance value of the flying capacitors, internal resistances of switches, and ESR of flying capacitors. When the output voltage is in regulation, the regulator in the model controls the voltage V' to keep the output voltage equal to 4.5 V (typical). With increased output current, the voltage drop across R_{OUT} increases. To prevent drop in output voltage, the voltage drop across the regulator is reduced, V' increases, and V_{OUT} remains at 4.5 V. When the output current increases to the point that there is zero voltage drop across the regulator, V' equals the input voltage, and the output voltage is on the edge of regulation. Additional output current causes the output voltage to fall out of regulation, so that the operation is similar to a basic open-loop 1.5× charge pump. In this mode, output current results in output voltage drop proportional to the output resistance of the charge pump. The out-of-regulation output voltage can be approximated by: $V_{OUT} = 1.5 \times V_{IN} - I_{OUT} \times R_{OUT}$.

7.3.1.2 Controlling Charge Pump

The charge pump is controlled with two CP_MODE bits in register 08H. When both bits are low, the charge pump is disabled, and the output voltage is pulled down with 300 kΩ. Charge pump can be forced to bypass mode, so that battery voltage is going directly to RGB outputs. In 1.5× mode output voltage is boosted to 4.5 V. In automatic mode, charge pump operation mode is defined by LED outputs saturation described in *LED Forward Voltage Monitoring*. Table 1 lists operation modes and selection bits.

Table 1. CONFIG Register (08H)

NAME	BIT	DESCRIPTION
CP_MODE	4:3	Charge pump operation mode 00b = OFF 01b = Forced to bypass mode (1×) 10b = Forced to 1.5× mode 11b = Automatic mode selection

Copyright © 2007–2016, Texas Instruments Incorporated

7.3.1.3 LED Forward Voltage Monitoring

When charge pump automatic mode selection is enabled, voltages over LED drivers are monitored. If drivers do not have enough headroom, charge pump gain is set to 1.5×. Driver saturation monitor does not have a fixed voltage limit, since saturation voltage is a function of temperature and current. Charge pump gain is set to 1×, when battery voltage is high enough to supply all LEDs.

In automatic gain change mode, charge pump is switched to bypass mode (1×), when LEDs are inactive for over 50 ms.

Charge pump gain control utilizes digital filtering to prevent supply voltage disturbances from triggering gain changes. If the R driver current source is connected to a battery (address 08H, bit R_TO_BATT = 1), voltage monitoring is disabled in R output, but still functional in B and G outputs.

LED forward voltage monitoring and gain control block diagram is shown in Figure 15.

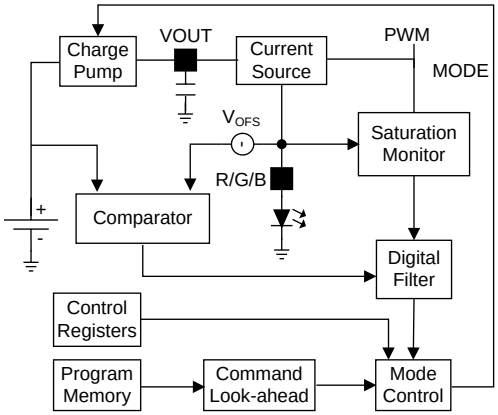

Copyright © 2016, Texas Instruments Incorporated

Figure 15. Voltage Monitoring Block Diagram for One Output

7.3.2 LED Driver Operational Description

The LP5521 LED drivers are constant current sources with 8-bit PWM control. Output current can be programmed with I^2C register up to 25.5 mA. Current setting resolution is 100 μA (8-bit control).

R driver has two modes: current source can be connected to the battery (V_{DD}) or to the charge pump output. If a current source is connected to the battery, automatic charge pump gain control is not used for this output. This approach provides better efficiency when LED with low V_F is connected to R driver, and battery voltage is high enough to drive this LED in all conditions. R driver mode can be selected with I^2C register bit. When address 08H, bit R_TO_BATT = 1, R current source is connected to battery. When it is 0 (default), R current source is connected to charge pump same way as in G and B drivers. G and B drivers are always connected to charge pump output.

Some LED configuration examples are given in Table 2. When LEDs with low V_F are used, charge pump can be operating in bypass mode (1×). This eliminates the need of having double drivers for all outputs; one connected to battery and another connected to charge pump output. When LP5521 is driving a RGB LED, R channel can be configured to use battery power. This configuration increases power efficiency by minimizing the voltage drop across the LED driver.

Table 2. LED Configuration Examples

CONFIGURATION	R OUTPUT TO BATT	R OUTPUT TO CP	CP MODE
RGB LED with low V_F red	X		Auto (1× or 1.5×)
3 × low V_F LED		X	1×
3 × white LED		X	Auto (1× or 1.5×)
1 × low V_F LED (R output)	X		Disabled

PWM frequency is either 256 Hz or 558 Hz, frequency is set with PWM_HF bit in register 08H. When PWM_HF is 0, the frequency is 256 Hz, and when bit is 1, the PWM frequency is 558 Hz. Brightness adjustment is either linear or logarithmic. This can be set with register 00H LOG_EN bit. When LOG_EN = 0 linear adjustment scale is used, and when LOG_EN = 1 logarithmic scale is used. By using logarithmic scale the visual effect seems linear to the eye. Register control bits are presented in Table 3, Table 4, and Table 5:

Table 3. R_CURRENT Register (05H), G_CURRENT register (06H), B_CURRENT register (07H):

NAME	BIT	DESCRIPTION			
CURRENT	7:0	Current setting			
		bin	hex	dec	mA
		0000 0000	00	0	0.0
		0000 0001	01	1	0.1
		0000 0010	02	2	0.2
		0000 0011	03	3	0.3
		0000 0100	04	4	0.4
		0000 0101	05	5	0.5
		0000 0110	06	6	0.6
		...	...	...	...
		1010 1111	**AF**	**175**	**17.5 (def)**
		...	...	...	...
		1111 1011	FB	251	25.1
		1111 1100	FC	252	25.2
		1111 1101	FD	253	25.3
		1111 1110	FE	254	25.4
		1111 1111	FF	255	25.5

Table 4. ENABLE Register (00H):

NAME	BIT	DESCRIPTION
LOG_EN	7	Logarithmic PWM adjustment enable bit 0 = Linear adjustment 1 = Logarithmic adjustment

Table 5. CONFIG Register (08H):

NAME	BIT	DESCRIPTION
PWM_HF	6	PWM clock frequency 0 = 256 Hz, frequency defined by the 32-kHz clock (internal or external) 1 = 558 Hz, frequency defined by internal oscillator

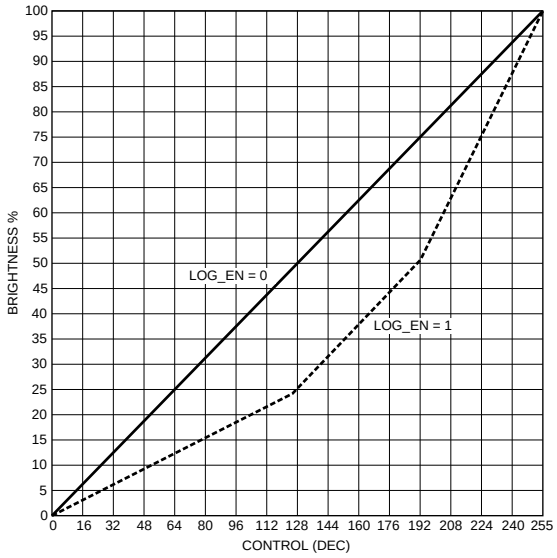

Figure 16. Logarithmic and Linear PWM Adjustment Curves

Copyright © 2007–2016, Texas Instruments Incorporated

7.3.3 Automatic Power Save

Automatic power save mode is enabled when PWRSAVE_EN bit in register address 08H is 1. Almost all analog blocks are powered down in power save, if external clock is used. Only charge pump protection circuits remain active. However if internal clock has been selected only charge pump and led drivers are disabled during power save since digital part of the LED controller need to remain active. In both cases charge pump enters 'weak 1×' mode. In this mode charge pump utilizes a passive current limited keep-alive switch, which keeps the output voltage at battery level.

During program execution LP5521 can enter power save if there is no PWM activity in R, G and B outputs. To prevent short power save sequences during program execution, LP5521 has command look-ahead filter. In every instruction cycle R, G, B commands are analyzed, and if there is sufficient time left with no PWM activity, the device enters power save. In power save program execution continues uninterruptedly. When a command that requires PWM activity is executed, fast internal start-up sequence will be started automatically. Table 6 describe commands and conditions that can activate power save. All channels (R,G,B) need to meet power save condition in order to enable power save.

Table 6. LED Controller Operation

LED CONTROLLER OPERATION MODE (R,G,B_MODE)	POWER SAVE CONDITION
00b	Disabled mode enables power save
01b	Load program to SRAM mode prevents power save
10b	Run program mode enables power save if there is no PWM activity and command look-ahead filter condition is met
11b	Direct control mode enables power save if there is no PWM activity

COMMAND	POWER SAVE CONDITION
Wait	No PWM activity and current command wait time longer than 50 ms. If prescale = 1 then wait time needs to be longer than 80 ms.
Ramp	Ramp Command PWM value reaches minimum 0 and current command execution time left more than 50 ms. If prescale = 1 then time left needs to be more than 80 ms.
Trigger	No PWM activity during wait for trigger command execution.
End	No PWM activity or Reset bit = 1
Set PWM	Enables power save if PWM set to 0 and next command generates at least 50 ms wait
Other commands	No effect to power save

See application note *LP5521 Power Efficiency Considerations* (SNVA185) for more information.

7.3.4 External Clock Detection

The presence of external clock can be detected by the LP5521. Program execution is clocked with internal 32 kHz clock or with external clock. Clocking is controlled with register address 08H bits, INT_CLK_EN and CLK_DET_EN as seen on the following table.

External clock can be used if clock is present at CLK_32K pin. External clock frequency must be 32 kHz for the program execution / PWM timing to be like specified. If higher or lower frequency is used, it will affect the program engine execution speed. If other than 32 kHz clock frequency is used, the program execution timings must be scaled accordingly. The external clock detector block only detects too low clock frequency (< 15 kHz). If external clock frequency is higher than specified, the external clock detector notifies that external clock is present. External clock status can be checked with read only bit EXT_CLK_USED in register address 0CH, when the external clock detection is enabled (CLK_DET_EN bit = high). If EXT_CLK_USED = 1, then the external clock is detected and it is used for timing, if automatic clock selection is enabled (see Table 7).

If external clock is stuck-at-zero or stuck-at-one, or the clock frequency is too low, the clock detector indicates that external clock is not present.

If external clock is not used on the application, connect the CLK_32K pin to GND to prevent floating of this pin and extra current consumption.

Table 7. CONFIG Register (08H):

NAME	BIT	DESCRIPTION
CLK_DET_EN, INT_CLK_EN	1:0	LED controller clock source 00b = External clock source (CLK_32K) 01b = Internal clock 10b = Automatic selection 11b = Internal clock

7.3.5 Logic Interface Operational Description

LP5521 features a flexible logic interface for connecting to processor and peripheral devices. Communication is done with I^2C compatible interface and different logic input/output pins makes it possible to synchronize operation of several devices.

7.3.5.1 I/O Levels

I^2C interface, CLK_32K and TRIG pins input levels are defined by EN pin. Using EN pin as voltage reference for logic inputs simplifies PWB routing and eliminates the need for dedicated V_{IO} pin. Figure 17 describes EN pin connections.

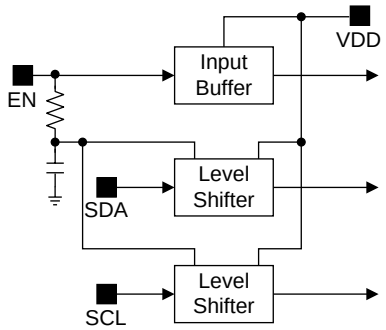

Copyright © 2016, Texas Instruments Incorporated

Figure 17. Using EN Pin as Digital I/O Voltage Reference

ADDR_SEL0/1 are referenced to V_{DD} voltage. GPO pin level is defined by V_{DD} voltage.

7.3.5.2 GPO/INT Pins

LP5521 has one General Purpose Output pin (GPO); the INT pin can also be configured as a GPO pin. When INT is configured as GPO output, its level is defined by the V_{DD} voltage. State of the pins can be controlled with GPO register (0EH). GPO pins are digital CMOS outputs and no pullup or pulldown resistors are needed.

When INT pin GPO function is disabled, it operates as an open drain pin. INT signal is active low; that is, when interrupt signal is sent, the pin is pulled to GND. External pullup resistor is needed for proper functionality.

Table 8. GPO Register (0EH)

NAME	BIT	DESCRIPTION
INT_AS_GPO	2	Enable INT pin GPO function 0 = INT pin functions as a INT pin 1 = INT pin functions as a GPO pin
GPO	1	0 = GPO pin state is low 1 = GPO pin state is high
INT	0	0 = INT pin state is low (INT_AS_GPO=1) 1 = INT pin state is high (INT_AS_GPO=1)

Copyright © 2007–2016, Texas Instruments Incorporated

7.3.5.3 TRIG Pin

The TRIG pin can function as an external trigger input or output. External trigger signal is active low; that is, when trigger is sent or received the pin is pulled to GND. TRIG is an open-drain pin and external pullup resistor is needed for trigger line. External trigger input signal must be at least two 32-kHz clock cycles long to be recognized. Trigger output signal is three 32-kHz clock cycles long. If TRIG pin is not used on application, connected the TRIG pin to GND to prevent floating of this pin and extra current consumption.

7.3.5.4 ADDR_SEL0,1 Pins

The ADDR_SEL0,1 pins define the chip I^2C address. Pins are referenced to V_{DD} signal level. See *I^2C-Compatible Serial Bus Interface* for I^2C address definitions.

7.3.5.5 CLK_32K Pin

The CLK_32K pin is used for connecting an external 32-kHz clock to LP5521. External clock can be used to synchronize the sequence engines of several LP5521. Using external clock can also improve automatic power save mode efficiency, because internal clock can be switched off automatically when device has entered power save mode, and external clock is present. See application note *LP5521 Power Efficiency Considerations* (SNVA185) for more information.

Device can be used without the external clock. If external clock is not used on the application, connect the CLK_32K pin to GND to prevent floating of this pin and extra current consumption.

7.4 Device Functional Modes

7.4.1 Modes of Operation

RESET: In the RESET mode all the internal registers are reset to the default values. Reset is done always if Reset Register (0DH) is written FFH or internal power on reset (POR) is activated. POR activates when supply voltage is connected or when the supply voltage V_{DD} falls below 1.5 V typical (0.8 V minimum). Once V_{DD} rises above 1.5 V, POR inactivates, and the chip continues to the STANDBY mode. CHIP_EN control bit is low after POR by default.

STANDBY: The STANDBY mode is entered if the register bit CHIP_EN or EN pin is LOW and Reset is not active. This is the low power consumption mode, when all circuit functions are disabled. Registers can be written in this mode if EN pin is high. Control bits are effective after start-up.

START-UP: When CHIP_EN bit is written high and EN pin is high, the INTERNAL STARTUP SEQUENCE powers up all the needed internal blocks (V_{REF}, bias, oscillator, etc.). Start-up delay is after setting EN pin high is 1 ms (typical). Start-up delay after setting CHIP_EN to 1 is 500 µs (typical). If the chip temperature rises too high, the thermal shutdown (TSD) disables the chip operation, and the chip state is in START-UP mode until no TSD event is present.(1)

NORMAL: During NORMAL mode the user controls the chip using the Control Registers. If EN pin is set low, the CHIP_EN bit is reset to 0.

POWER SAVE: In POWER SAVE mode analog blocks are disabled to minimize power consumption. See *Automatic Power Save* for further information.

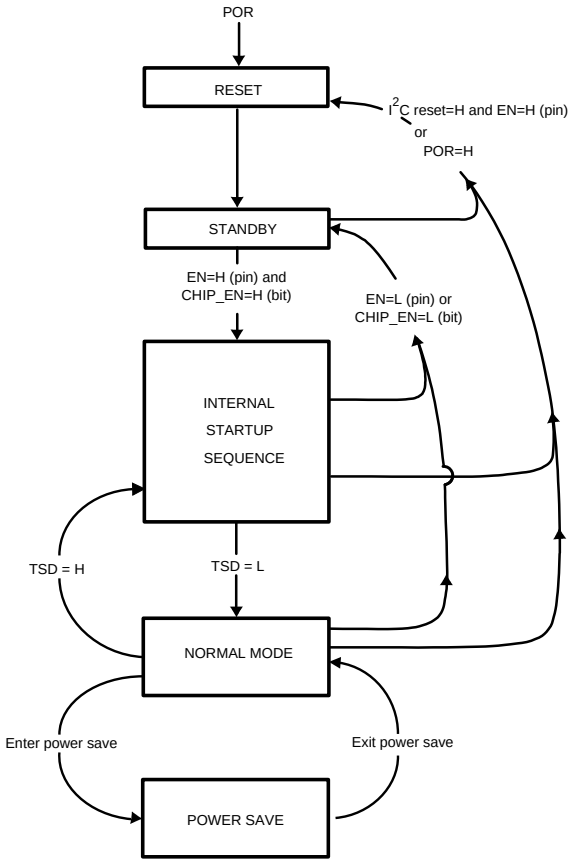

Figure 18. Modes of Operation

(1) Internal thermal shutdown circuitry protects the device from permanent damage. Thermal shutdown engages at T_J = 150°C (typical) and disengages at T_J = 130°C (typical).

Copyright © 2007–2016, Texas Instruments Incorporated

7.5 Programming

7.5.1 I²C-Compatible Serial Bus Interface

7.5.1.1 Interface Bus Overview

The I²C compatible synchronous serial interface provides access to the programmable functions and registers on the device. This protocol uses a two-wire interface for bidirectional communications between the IC's connected to the bus. The two interface lines are the serial data line (SDA), and the serial clock line (SCL). These lines should be connected to a positive supply, via a pullup resistor and remain HIGH even when the bus is idle.

Every device on the bus is assigned a unique address and acts as either a Master or a Slave depending on whether it generates or receives the serial clock (SCL).

7.5.1.2 Data Transactions

One data bit is transferred during each clock pulse. Data is sampled during the high state of the serial clock (SCL). Consequently, throughout the high period of the clock the data should remain stable. Any changes on the SDA line during the high state of the SCL and in the middle of a transaction, aborts the current transaction. New data should be sent during the low SCL state. This protocol permits a single data line to transfer both command/control information and data using the synchronous serial clock.

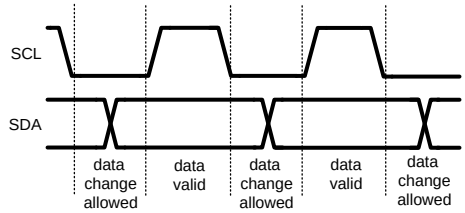

Figure 19. Data Validity

Each data transaction is composed of a start condition, a number of byte transfers (set by the software) and a stop condition to terminate the transaction. Every byte written to the SDA bus must be 8 bits long and is transferred with the most significant bit first. After each byte, an acknowledge signal must follow. The following sections provide further details of this process.

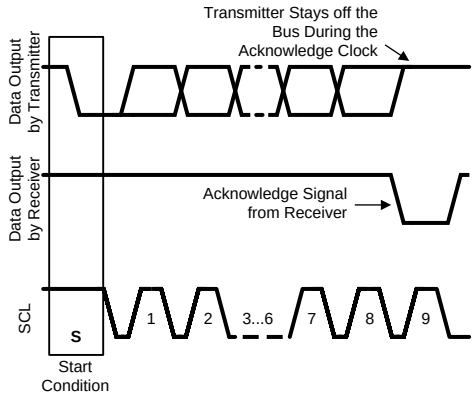

Figure 20. Acknowledge Signal

The Master device on the bus always generates the start and stop conditions (control codes). After a start condition is generated, the bus is considered busy and it retains this status until a certain time after a stop condition is generated. A high-to-low transition of the data line (SDA) while the clock (SCL) is high indicates a start condition. A low-to-high transition of the SDA line while the SCL is high indicates a stop condition.

Programming (continued)

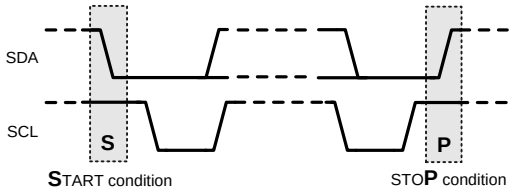

Figure 21. Start and Stop Conditions

In addition to the first start condition, a repeated start condition can be generated in the middle of a transaction. This allows another device to be accessed, or a register read cycle.

7.5.1.3 Acknowledge Cycle

The acknowledge cycle consists of two signals: the acknowledge clock pulse the master sends with each byte transferred, and the acknowledge signal sent by the receiving device.

The master generates the acknowledge clock pulse on the ninth clock pulse of the byte transfer. The transmitter releases the SDA line (permits it to go high) to allow the receiver to send the acknowledge signal. The receiver must pull down the SDA line during the acknowledge clock pulse and ensure that SDA remains low during the high period of the clock pulse, thus signaling the correct reception of the last data byte and its readiness to receive the next byte.

7.5.1.4 Acknowledge After Every Byte Rule

The master generates an acknowledge clock pulse after each byte transfer. The receiver sends an acknowledge signal after every byte received.

There is one exception to the *acknowledge after every byte* rule. When the master is the receiver, it must indicate to the transmitter an end of data by not-acknowledging (*negative acknowledge*) the last byte clocked out of the slave. This *negative acknowledge* still includes the acknowledge clock pulse (generated by the master), but the SDA line is not pulled down.

7.5.1.5 Addressing Transfer Formats

Each device on the bus has a unique slave address. The LP5521 operates as a slave device with the 7-bit address. The LP5521 I^2C address is pin selectable from four different choices. If 8-bit address is used for programming, the 8th bit is 1 for read and 0 for write. Table 9 shows the 8-bit I^2C addresses.

Table 9. 8-Bit I^2C Addresses

ADDR_SEL [1:0]	I^2C ADDRESS WRITE (8 bits)	I^2C ADDRESS READ (8 bits)
00	0110 0100 = 64H	0110 0101 = 65H
01	0110 0110 = 66H	0110 0111 = 67H
10	0110 1000 = 68H	0110 1001 = 69H
11	0110 1010 = 6AH	0110 1011 = 6BH

Before any data is transmitted, the master transmits the address of the slave being addressed. The slave device sends an acknowledge signal on the SDA line, once it recognizes its address.

The slave address is the first seven bits after a start condition. The direction of the data transfer (R/W) depends on the bit sent after the slave address — the eighth bit.

When the slave address is sent, each device in the system compares this slave address with its own. If there is a match, the device considers itself addressed and sends an acknowledge signal. Depending upon the state of the R/W bit (1:read, 0:write), the device acts as a transmitter or a receiver.

Copyright © 2007–2016, Texas Instruments Incorporated

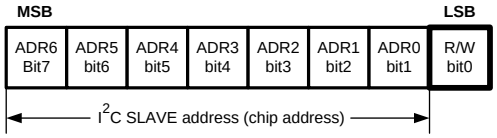

Figure 22. I²C Chip Address

7.5.1.6 Control Register Write Cycle

- Master device generates start condition.
- Master device sends slave address (7 bits) and the data direction bit (r/w = 0).
- Slave device sends acknowledge signal if the slave address is correct.
- Master sends control register address (8 bits).
- Slave sends acknowledge signal.
- Master sends data byte to be written to the addressed register.
- Slave sends acknowledge signal.
- If master will send further data bytes the control register address is incremented by one after acknowledge signal.
- Write cycle ends when the master creates stop condition.

7.5.1.7 Control Register Read Cycle

- Master device generates a start condition.
- Master device sends slave address (7 bits) and the data direction bit (r/w = 0).
- Slave device sends acknowledge signal if the slave address is correct.
- Master sends control register address (8 bits).
- Slave sends acknowledge signal.
- Master device generates repeated start condition.
- Master sends the slave address (7 bits) and the data direction bit (r/w = 1).
- Slave sends acknowledge signal if the slave address is correct.
- Slave sends data byte from addressed register.
- If the master device sends acknowledge signal, the control register address is incremented by one. Slave device sends data byte from addressed register.
- Read cycle ends when the master does not generate acknowledge signal after data byte and generates stop condition.

	ADDRESS MODE
Data Read	<Start Condition> <Slave Address><r/w = 0>[Ack] <Register Addr.>[Ack] <Repeated Start Condition> <Slave Address><r/w = 1>[Ack] [Register Data]<Ack or NAck> … additional reads from subsequent register address possible <Stop Condition>
Data Write	<Start Condition> <Slave Address><r/w='0'>[Ack] <Register Addr.>[Ack] <Register Data>[Ack] … additional writes to subsequent register address possible <Stop Condition>

<>Data from master [ ] Data from slave

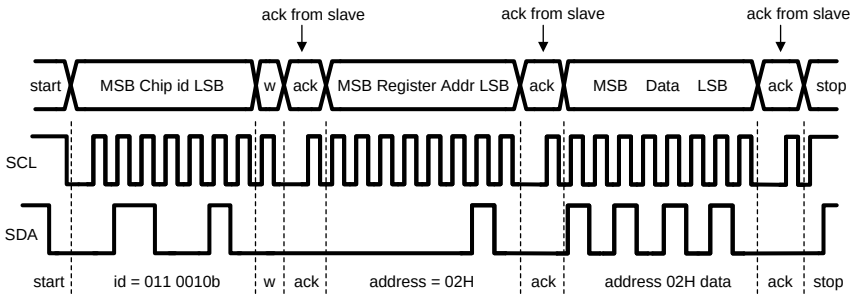

Figure 23. Register Write Format

When a READ function is to be accomplished, a WRITE function must precede the READ function, as shown in Figure 24.

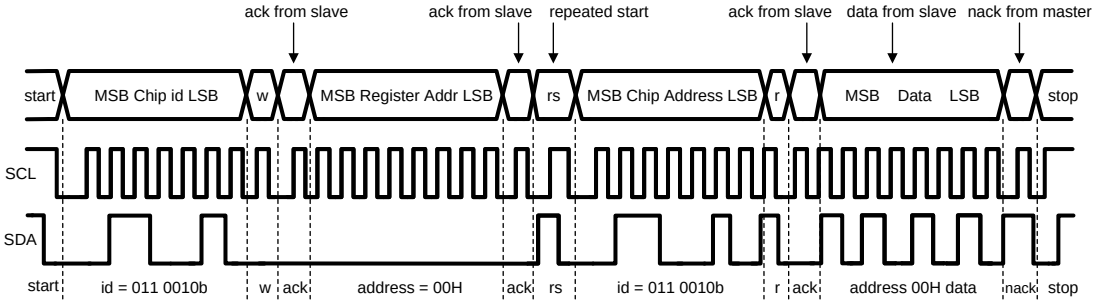

w = write (SDA = 0)
r = read (SDA = 1)
ack = acknowledge (SDA pulled down by either master or slave
rs = repeated start
id = 7-bit chip address

Figure 24. Register Read Format

7.5.2 LED Controller Operation Modes

Operation modes are defined in register address 01H. Each output channel (R, G, B) operation mode can be configured separately. MODE registers are synchronized to a 32-kHz clock. Delay between consecutive I^2C writes to OP_MODE register (01H) need to be longer than 153 µs (typical).

Table 10. OP_MODE Register (01H):

NAME	BIT	DESCRIPTION
R_MODE	5:4	R channel operation mode **00b** = Disabled, reset R channel PC **01b** = Load program to SRAM, reset R channel PC **10b** = Run program defined by R_EXEC **11b** = Direct control, reset R channel PC
G_MODE	3:2	G channel operation mode **00b** = Disabled, reset G channel PC **01b** = Load program to SRAM, reset G channel PC **10b** = Run program defined by G_EXEC **11b** = Direct control, reset G channel PC
B_MODE	1:0	B channel operation mode **00b** = Disabled, reset B channel PC **01b** = Load program to SRAM, reset B channel PC **10b** = Run program defined by B_EXEC **11b** = Direct control, reset B channel PC

Copyright © 2007–2016, Texas Instruments Incorporated

7.5.2.1 Disabled

Each channel can be configured to disabled mode. LED output current is 0 during this mode. Disabled mode resets PC of respective channel.

7.5.2.2 LOAD Program

LP5521 can store 16 commands for each channel (R, G, B). Each command consists of 16 bits. Because one register has only 8 bits, one command requires two I^2C register addresses. In order to reduce program load time LP5521 supports address auto incrementation. Register address is incremented after each 8 data bits. Whole program memory can be written in one I^2C write sequence.

Program memory is defined in the LP5521 register table, 10H to 2FH for R channel, 30H to 4FH for G channel and 50H to 6FH for B channel. In order to be able to access program memory at least one channel operation mode needs to be LOAD Program.

Memory writes are allowed only to the channel in LOAD mode. All channels are in hold while one or several channels are in LOAD program mode, and PWM values are frozen for the channels which are not in LOAD mode. Program execution continues when all channels are out of LOAD program mode. LOAD Program mode resets PC of respective channel.

7.5.2.3 RUN Program

RUN Program mode executes the commands defined in program memory for respective channel (R, G, B). Execution register bits in ENABLE register define how program is executed. Program start position can be programmed to Program Counter register (see the following tables). By manually selecting the PC start value, user can write different lighting sequences to the memory, and select appropriate sequence with the PC register. If program counter runs to end (15) the next command will be executed from program location 0.

If internal clock is used in the RUN program mode, operation mode needs to be written disabled (00b) before disabling the chip (with CHIP_EN bit or EN pin) to ensure that the sequence starts from the correct program counter (PC) value when restarting the sequence.

PC registers are synchronized to 32 kHz clock. Delay between consecutive I^2C writes to PC registers (09H, 0AH, 0BH) need to be longer than 153 µs (typ.).

Note that entering LOAD program or Direct Control Mode from RUN PROGRAM mode is not allowed. Engine execution mode should be set to Hold, and Operation Mode to disabled, when changing operation mode from RUN mode.

Table 11. R Channel PC Register (09H), G CHANNEL PC Register (0AH), B CHANNEL PC Register (0BH)

NAME	BIT	DESCRIPTION
PC	3:0	Program counter value from 0 to 15d

Table 12. ENABLE Register (00H)

NAME	BIT	DESCRIPTION
R_EXEC	5:4	R channel program execution **00b** = Hold: Wait until current command is finished then stop while EXEC mode is hold. PC can be read or written only in this mode. **01b** = Step: Execute instruction defined by current R channel PC value, increment PC and change R_EXEC to 00b (Hold) **10b** = Run: Start at program counter value defined by current R channel PC value **11b** = Execute instruction defined by current R channel PC value and change R_EXEC to 00b (Hold)
G_EXEC	3:2	G channel program execution **00b** = Hold: Wait until current command is finished then stop while EXEC mode is hold. PC can be read or written only in this mode. **01b** = Step: Execute instruction defined by current G channel PC value, increment PC and change G_EXEC to 00b (Hold) **10b** = Run: Start at program counter value defined by current G channel PC value **11b** = Execute instruction defined by current G channel PC value and change G_EXEC to 00b (Hold)

Table 12. ENABLE Register (00H) (continued)

NAME	BIT	DESCRIPTION
B_EXEC	1:0	B channel program execution **00b** = Hold: Wait until current command is finished then stop while EXEC mode is hold. PC can be read or written only in this mode. **01b** = Step: Execute instruction defined by current B channel PC value, increment PC and change B_EXEC to 00b (Hold) **10b** = Run: Start at program counter value defined by current B channel PC value **11b** = Execute instruction defined by current B channel PC value and change B_EXEC to 00b (Hold)

EXEC registers are synchronized to 32-kHz clock. Delay between consecutive I^2C writes to ENABLE register (00H) need to be longer than 488 µs (typ.).

7.5.2.3.1 DIRECT Control

When R, G or B channel mode is set to 11b, the LP5521 drivers work in direct control mode. LP5521 LED channels can be controlled independently through I^2C. For each channel there is a PWM control register and a output current control register. With output current control register is set what is the maximum output current with 8-bit resolution, step size is 100 µA. Duty cycle can be set with 8-bit resolution. Direct control mode resets respective channel's PC. PWM control bits are presented in Table 13:

Table 13. R_PWM Register (02H), G_PWM Register (03H), B_PWM Register (04H):

NAME	BIT	DESCRIPTION
PWM	7:0	LED PWM value during direct control operation mode 0000 0000b = 0% 1111 1111b = 100%

If charge pump automatic gain change is used in this mode, then PWM values need to be written 0 before changing the drivers' operation mode to disabled (00b) to ensure proper automatic gain change operation.

7.5.3 LED Controller Programming Commands

LP5521 has three independent programmable channels (R, G, B). Trigger connections between channels are common for all channels. All channels have own program memories for storing complex patterns. Brightness control and patterns are done with 8-bit PWM control (256 steps) to get accurate and smooth color control.

Program execution is timed with 32 768 Hz clock. This clock can be generated internally or external 32 kHz clock can be connected to CLK_32K pin. Using external clock enables synchronization of LED timing to this clock rather than internal clock. Selection of the clock is made with address 08H bits INT_CLK_EN and CLK_DET_EN. See *External Clock Detection* for details.

Supported commands are listed in Table 14. **Command compiler is available for easy sequence programming. With Command compiler it is possible to write sequences with simple ASCII commands, which are then converted to binary or hex format. See application note "LP5521 Programming Considerations" for examples of Command compiler usage.**

Table 14. LED Controller Programming Commands

Command	15	14	13	12	11	10	9	8	7	6	5	4	3	2	1	0
Ramp Wait	0	Pre-scale	Step time						Sign	Increment (number of steps)						
Set PWM	0	1	0						PWM Value							
Go to Start	0	0	0						0	0	0	0	0	0	0	0
Branch	1	0	1	Loop count						x	Step / command number					
End	1	1	0	Int	Reset	X										
Trigger	1	1	1	Wait for trigger on channels 5-0						Send trigger on channels 5-0						X

Copyright © 2007–2016, Texas Instruments Incorporated

X means do not care whether 1 or 0.

7.5.3.1 RAMP/WAIT

Ramp command generates a PWM ramp starting from current value. At each ramp step the output is incremented by one. Time for one step is defined with Prescale and Step time bits. Minimum time for one step is 0.49 ms and maximum time is 63 × 15.6 ms = 1 second/step, so it is possible to program very fast and also very slow ramps. Increment value defines how many steps are taken in one command. Number of actual steps is Increment + 1. Maximum value is 127d, which corresponds to half of full scale (128 steps). If during ramp command PWM reaches minimum/maximum (0/255) ramp command is executed to the end, and PWM stays at minimum/maximum. This enables ramp command to be used as combined ramp and wait command in a single instruction.

Ramp command can be used as wait instruction when increment is zero.

Setting register 00H bit LOG_EN sets the scale from linear to logarithmic. When LOG_EN = 0 linear scale is used, and when LOG_EN = 1 logarithmic scale is used. By using logarithmic scale the visual effect of the ramp command seems linear to the eye.

Table 15. Ramp/Wait Command

15	14	13	12	11	10	9	8	7	6	5	4	3	2	1	0
0	Pre-scale	Step time						Sign	Increment						

NAME	VALUE(d)	DESCRIPTION
Prescale	0	Divides master clock (32 768Hz) by 16 = 2048 Hz, 0.49 ms cycle time
	1	Divides master clock (32 768Hz) by 512 = 64 Hz, 15.6 ms cycle time
Step time	1-63	One ramp increment done in (step time) x (clock after prescale) Note: 0 means Set PMW command.
Sign	0	Increase PWM output
	1	Decrease PWM output
Increment	0-127	The number of steps is Increment + 1. Note: 0 is a wait instruction.

Application example:

For example if following parameters are used for ramp:

- Prescale = 1 → cycle time = 15.6 ms
- Step time = 2 → time = 15.6 ms x 2 = 31.2 ms
- Sign = 0 → rising ramp
- Increment = 4 → 5 cycles

Ramp command will be: 0100 0010 0000 0100b = 4204H

If current PWM value is 3, and the first command is as described above and next command is a ramp with otherwise same parameters, but with Sign = 1 (Command = 4284H), the result will be like in Figure 25:

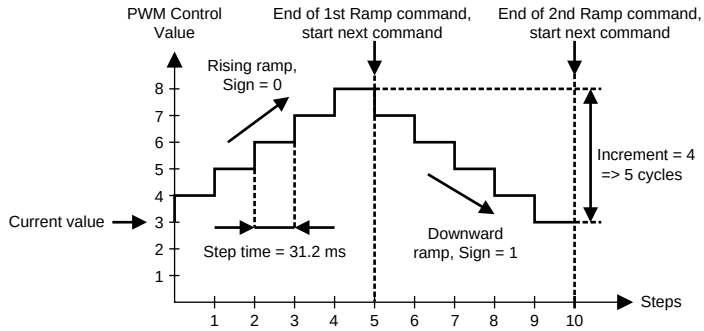

Figure 25. Example of 2 Sequential Ramp Commands.

7.5.3.2 Set PWM

Set PWM output value from 0 to 255. Command takes sixteen 32 kHz clock cycles (= 488 μs). Setting register 00H bit LOG_EN sets the scale from linear to logarithmic.

Table 16. Set PWM Command

15	14	13	12	11	10	9	8	7	6	5	4	3	2	1	0
0	1	0	0	0	0	0	0	PWM value							

7.5.3.3 Go to Start

Go to start command resets Program Counter register and continues executing program from the 00H location. Command takes sixteen 32 kHz clock cycles. Note that default value for all program memory registers is 0000H, which is Go to start command.

Go to start command															
15	14	13	12	11	10	9	8	7	6	5	4	3	2	1	0
0	0	0	0	0	0	0	0	0	0	0	0	0	0	0	0

7.5.3.4 Branch

When branch command is executed, the 'step number' value is loaded to PC and program execution continues from this location. Looping is done by the number defined in loop count parameter. Nested looping is supported (loop inside loop). The number of nested loops is not limited. Command takes sixteen 32-kHz clock cycles.

Table 17. Branch Command

15	14	13	12	11	10	9	8	7	6	5	4	3	2	1	0
1	0	1	Loop count						X	X	X	Step number			

NAME	VALUE(d)	DESCRIPTION
loop count	0-63	The number of loops to be done. 0 means infinite loop.
step number	0-15	The step number to be loaded to program counter.

7.5.3.5 End

End program execution, resets the program counter and sets the corresponding EXEC register to 00b (hold). Command takes sixteen 32-kHz clock cycles.

Table 18. End Command

15	14	13	12	11	10	9	8	7	6	5	4	3	2	1	0
1	1	0	int	reset	X	X	X	X	X	X	X	X	X	X	X

NAME	VALUE	DESCRIPTION
int	0	No interrupt will be sent.
	1	Send interrupt to processor by pulling the INT pin down and setting corresponding status register bit high to notify that program has ended. Interrupt can only be cleared by reading interrupt status register 0CH.
reset	0	Keep the current PWM value.
	1	Set PWM value to 0.

Copyright © 2007–2016, Texas Instruments Incorporated

X means do not care whether 1 or 0.

7.5.3.6 Trigger

Wait or send triggers can be used to, for example, synchronize operation between different channels. Send trigger command takes sixteen 32-kHz clock cycles, and wait for trigger takes at least sixteen 32 kHz clock cycles. The receiving channel stores sent triggers. Received triggers are cleared by wait for trigger command if received triggers match to channels defined in the command. Channel waits for until all defined triggers have been received.

External trigger input signal must be at least two 32-kHz clock cycles (= 61 μs typical) long to be recognized. Trigger output signal is three 32-kHz clock cycles (92 μs typical) long. External trigger signal is active low; that is, when trigger is sent/received the pin is pulled to GND. Sent external trigger is masked; that is, the device which has sent the trigger does not recognize it. If send and wait external trigger are used on the same command, the send external trigger is executed first, then the wait external trigger.

Table 19. Trigger Command

15	14	13	12	11	10	9	8	7	6	5	4	3	2	1	0
1	1	1	wait trigger <5:0>						send trigger <5:0>						X
			EXT	X		B	G	R	EXT	X		B	G	R	

NAME	VALUE(d)	DESCRIPTION
wait trigger<5:0>	0-31	Wait for trigger for the channel(s) defined. Several triggers can be defined in the same command. Bit 0 is R, bit 1 is G, bit 2 is B and bit 5 is external trigger I/O. Bits 3 and 4 are not in use.
send trigger<5:0>	0-31	Send trigger for the channel(s) defined. Several triggers can be defined in the same command. Bit 0 is R, bit 1 is G, bit 2 is B and bit 5 is external trigger I/O. Bits 3 and 4 are not in use.

X means do not care whether 1 or 0.

7.6 Register Maps

Table 20. LP5521 Control Register Names and Default Values

ADDR (HEX)	REGISTER	D7	D6	D5	D4	D3	D2	D1	D0	DEFAULT
00	**ENABLE**	LOG_EN	CHIP_EN	R_EXEC[1:0]		G_EXEC[1:0]		B_EXEC[1:0]		0000 0000
01	**OP MODE**			R_MODE[1:0]		G_MODE[1:0]		B_MODE[1:0]		0000 0000
02	**R PWM**	R_PWM[7:0]								0000 0000
03	**G PWM**	G_PWM[7:0]								0000 0000
04	**B PWM**	B_PWM[7:0]								0000 0000
05	**R CURRENT**	R_CURRENT[7:0]								1010 1111
06	**G CURRENT**	G_CURRENT[7:0]								1010 1111
07	**B CURRENT**	B_CURRENT[7:0]								1010 1111
08	**CONFIG**		PWM_HF	PWRSAVE_EN	CP_MODE[1:0]		R_TO_BATT	CLK_DET_EN	INT_CLK_EN	0000 0000
09	**R PC**					R_PC[3:0]				0000 0000
0A	**G PC**					G_PC[3:0]				0000 0000
0B	**B PC**					B_PC[3:0]				0000 0000
0C	**STATUS**					EXT_CLK_USED	R_INT	G_INT	B_INT	0000 0000
0D	**RESET**	RESET[7:0]								0000 0000
0E	**GPO**						INT_AS_GPO	GPO	INT	0000 0000
10	**PROG MEM R**	CMD_R1[15:8]								0000 0000
11	**PROG MEM R**	CMD_R1[7:0]								0000 0000
...										
2E	**PROG MEM R**	CMD_R16[15:8]								0000 0000
2F	**PROG MEM R**	CMD_R16[7:0]								0000 0000
30	**PROG MEM G**	CMD_G1[15:8]								0000 0000
31	**PROG MEM G**	CMD_G1[7:0]								0000 0000
...										
4E	**PROG MEM G**	CMD_G16[15:8]								0000 0000
4F	**PROG MEM G**	CMD_G16[7:0]								0000 0000
50	**PROG MEM B**	CMD_B1[15:8]								0000 0000
51	**PROG MEM B**	CMD_B1[7:0]								0000 0000
...										
6E	**PROG MEM B**	CMD_B16[15:8]								0000 0000
6F	**PROG MEM B**	CMD_B16[7:0]								0000 0000

Copyright © 2007–2016, Texas Instruments Incorporated

7.6.1 Enable Register (Enable)

Address 00H

Reset value 00H

Table 21. Enable Register

7	6	5	4	3	2	1	0
LOG_EN	CHIP_EN	R_EXEC[1]	R_EXEC[0]	G_EXEC[1]	G_EXEC[0]	B_EXEC[1]	B_EXEC[0]

NAME	BIT	ACCESS	ACTIVE	DESCRIPTION
LOG_EN	7	R/W	High	Logarithmic PWM adjustment generation enable
CHIP_EN	6	R/W	High	Master chip enable. Enables device internal startup sequence. Startup delay after setting CHIP_EN is 500 µs. See Operation for further information. Setting EN pin low resets the CHIP_EN state to 0.
R_EXEC	5:4	R/W		R channel program execution. **00b** = Hold: Wait until current command is finished then stop while EXEC mode is hold. PC can be read or written only in this mode. **01b** = Step: Execute instruction defined by current R channel PC value, increment PC and change R_EXEC to 00b (Hold) **10b** = Run: Start at program counter value defined by current R Channel PC value **11b** = Execute instruction defined by current R channel PC value and change R_EXEC to 00b (Hold)
G_EXEC	3:2	R/W		G channel program execution **00b** = Hold: Wait until current command is finished then stop while EXEC mode is hold. PC can be read or written only in this mode. **01b** = Step: Execute instruction defined by current G channel PC value, increment PC and change G_EXEC to 00b (Hold) **10b** = Run: Start at program counter value defined by current G Channel PC value **11b** = Execute instruction defined by current G channel PC value and change G_EXEC to 00b (Hold)
B_EXEC	1:0	R/W		B channel program execution **00b** = Hold: Wait until current command is finished then stop while EXEC mode is hold. PC can be read or written only in this mode. **01b** = Step: Execute instruction defined by current B channel PC value, increment PC and change B_EXEC to 00b (Hold) **10b** = Run: Start at program counter value defined by current B Channel PC value **11b** = Execute instruction defined by current B channel PC value and change B_EXEC to 00b (Hold)

EXEC registers are synchronized to 32 kHz clock. Delay between consecutive I^2C writes to ENABLE register (00H) need to be longer than 488 µs (typ).

7.6.2 Operation Mode Register (OP Mode)

Address 01H

Reset value 00H

Table 22. OP Mode Register

7	6	5	4	3	2	1	0
		R_MODE[1]	R_MODE[0]	G_MODE[1]	G_MODE[0]	B_MODE[1]	B_MODE[0]

NAME	BIT	ACCESS	ACTIVE	DESCRIPTION
R_MODE	5:4	R/W		R channel operation mode 00b = Disabled 01b = Load program to SRAM, reset R channel PC 10b = Run program defined by R_EXEC 11b = Direct control
G_MODE	3:2	R/W		G channel operation mode 00b = Disabled 01b = Load program to SRAM, reset G channel PC 10b = Run program defined by G_EXEC 11b = Direct control
B_MODE	1:0	R/W		B channel operation mode 00b = Disabled 01b = Load program to SRAM, reset B channel PC 10b = Run program defined by B_EXEC 11b = Direct control

MODE registers are synchronized to 32 kHz clock. Delay between consecutive I^2C writes to OP_MODE register (01H) need to be longer than 153 μs (typ).

7.6.3 R Channel PWM Control (R_PWM)

Address 02H

Reset value 00H

Table 23. R PWM Register

7	6	5	4	3	2	1	0
R_PWM[7:0]							

NAME	BIT	ACCESS	ACTIVE	DESCRIPTION
R_PWM	7:0	R/W		R Channel PWM value during direct control operation mode

Copyright © 2007–2016, Texas Instruments Incorporated

7.6.4 G Channel PWM Control (G_PWM)

Address 03H

Reset value 00H

Table 24. G PWM Register

7	6	5	4	3	2	1	0
G_PWM[7:0]							

NAME	BIT	ACCESS	ACTIVE	DESCRIPTION
G_PWM	7:0	R/W		G Channel PWM value during direct control operation mode

7.6.5 B Channel PWM Control (B_PWM)

Address 04H

Reset value 00H

Table 25. B PWM Register

7	6	5	4	3	2	1	0
B_PWM[7:0]							

NAME	BIT	ACCESS	ACTIVE	DESCRIPTION
B_PWM	7:0	R/W		B Channel PWM value during direct control operation mode

7.6.6 R Channel Current (R_CURRENT)

Address 05H

Reset Value AFH

Table 26. R CURRENT Register

7	6	5	4	3	2	1	0
R_CURRENT[7:0]							

NAME	BIT	ACCESS	ACTIVE	DESCRIPTION
R_CURRENT	7:0	R/W		Current setting 0000 0000b = 0.0 mA 0000 0001b = 0.1 mA 0000 0010b = 0.2 mA 0000 0011b = 0.3 mA 0000 0100b = 0.4 mA 0000 0101b = 0.5 mA 0000 0110b = 0.6 mA ... **1010 1111b = 17.5 mA (default)** ... 1111 1011b = 25.1 mA 1111 1100b = 25.2 mA 1111 1101b = 25.3 mA 1111 1110b = 25.4 mA 1111 1111b = 25.5 mA

Copyright © 2007–2016, Texas Instruments Incorporated

7.6.7 G Channel Current (G_CURRENT)

Address 06H

Reset Value AFH

Table 27. G CURRENT Register

7	6	5	4	3	2	1	0
G_CURRENT[7:0]							

NAME	BIT	ACCESS	ACTIVE	DESCRIPTION
G_CURRENT	7:0	R/W		Current setting 0000 0000b = 0.0 mA 0000 0001b = 0.1 mA 0000 0010b = 0.2 mA 0000 0011b = 0.3 mA 0000 0100b = 0.4 mA 0000 0101b = 0.5 mA 0000 0110b = 0.6 mA ... **1010 1111b = 17.5 mA (default)** ... 1111 1011b = 25.1 mA 1111 1100b = 25.2 mA 1111 1101b = 25.3 mA 1111 1110b = 25.4 mA 1111 1111b = 25.5 mA

7.6.8 B Channel Current (B_CURRENT)

Address 07H

Reset value AFH

Table 28. B CURRENT Register

7	6	5	4	3	2	1	0
B_CURRENT[7:0]							

NAME	BIT	ACCESS	ACTIVE	DESCRIPTION
B_CURRENT	7:0	R/W		Current setting 0000 0000b = 0.0 mA 0000 0001b = 0.1 mA 0000 0010b = 0.2 mA 0000 0011b = 0.3 mA 0000 0100b = 0.4 mA 0000 0101b = 0.5 mA 0000 0110b = 0.6 mA ... **1010 1111b = 17.5 mA (default)** ... 1111 1011b = 25.1 mA 1111 1100b = 25.2 mA 1111 1101b = 25.3 mA 1111 1110b = 25.4 mA 1111 1111b = 25.5 mA

Copyright © 2007–2016, Texas Instruments Incorporated

7.6.9 Configuration Control (CONFIG)

Address 08H

Reset value 00H

Table 29. CONFIG Register

7	6	5	4	3	2	1	0
	PWM_HF	PWRSAVE_EN	CP_MODE[1:0]		R_TO_BATT	CLK_DET_EN	INT_CLK_EN

NAME	BIT	ACCESS	ACTIVE	DESCRIPTION
PWM_HF	6	R/W	High	PWM clock 0 = 256 Hz PWM clock used (CLK_32K) 1 = 558 Hz PWM clock used (internal oscillator)
PWRSAVE_EN	5	R/W	High	Power save mode enable
CP_MODE	4:3	R/W		Charge pump operation mode 00b = OFF 01b = Forced to bypass mode (1x) 10b = Forced to 1.5x mode 11b = Automatic mode selection
R_TO_BATT	2	R/W	High	R channel supply connection 0 = R output connected to charge pump 1 = R output connected to battery
CLK_DET_EN, INT_CLK_EN	1:0	R/W		LED Controller clock source 00b = External clock source (CLK_32K) 01b = Internal clock 10b = Automatic selection 11b = Internal clock

7.6.10 R Channel Program Counter Value (R Channel PC)

Address 09H

Reset value 00H

Table 30. R Channel PC Register

7	6	5	4	3	2	1	0
				R_PC[3]	R_PC[2]	R_PC[1]	R_PC[0]

NAME	BIT	ACCESS	ACTIVE	DESCRIPTION
R_PC	3:0	R/W		R channel program counter value

PC registers are synchronized to a 32-kHz clock. Delay between consecutive I^2C writes to PC registers needs to be longer than 153 µs (typ.). PC register can be read or written only when EXEC mode is 'hold'.

7.6.11 G Channel Program Counter Value (G Channel PC)

Address 0AH

Reset value 00H

Table 31. G Channel PC Register

7	6	5	4	3	2	1	0
				G_PC[3]	G_PC[2]	G_PC[1]	G_PC[0]

NAME	BIT	ACCESS	ACTIVE	DESCRIPTION
G_PC	3:0	R/W		G channel program counter value

PC registers are synchronized to 32 kHz clock. Delay between consecutive I^2C writes to PC registers needs to be longer than 153 μs (typ.). PC register can be read or written only when EXEC mode is 'hold'.

7.6.12 B Channel Program Counter Value (B Channel PC)

Address 0BH

Reset value 00H

Table 32. B Channel PC Register

7	6	5	4	3	2	1	0
				B_PC[3]	B_PC[2]	B_PC[1]	B_PC[0]

NAME	BIT	ACCESS	ACTIVE	DESCRIPTION
B_PC	3:0	R/W		B channel program counter value

PC registers are synchronized to a 32-kHz clock. Delay between consecutive I^2C writes to PC registers must be longer than 153 μs (typ.). PC register can be read or written only when EXEC mode is 'hold'.

7.6.13 Status/Interrupt Register

Address 0CH

Reset value 00H

Table 33. STATUS/INTERRUPT Register

7	6	5	4	3	2	1	0
				EXT_CLK USED	R_INT	G_INT	B_INT

NAME	BIT	ACCESS	ACTIVE	DESCRIPTION
EXT_CLK USED	3	R		External clock state 0 = Internal 32kHz clock used 1 = External 32kHz clock used
R_INT	2	R	High	Interrupt from R channel
G_INT	1	R	High	Interrupt from G channel
B_INT	0	R	High	Interrupt from B channel

Note: Register INT bits will be cleared when read operation to Status/Interrupt register occurs. INT output pin (active low) will go high after read operation.

Copyright © 2007–2016, Texas Instruments Incorporated

7.6.14 RESET Register

Address 0DH

Reset value 00H

Table 34. RESET Register

7	6	5	4	3	2	1	0
RESET	RESET	RESET	RESET	RESET	RESET	RESET	RESET

NAME	BIT	ACCESS	ACTIVE	DESCRIPTION
RESET	7:0	W		Reset all register values when FFH is written. No acknowledge from LP5521 after write.

7.6.15 GPO Register

Address 0EH

Reset value 00H

Table 35. GPO Register

7	6	5	4	3	2	1	0
					INT_AS_GPO	GPO	INT

NAME	BIT	ACCESS	ACTIVE	DESCRIPTION
INT_AS_GPO	2	R/W	High	Enable INT pin GPO function
GPO	1	R/W	High	GPO pin state: 0 = LOW 1 = HIGH
INT	0	R/W	High	INT pin state (when INT_AS_GPO=1): 0 = LOW 1 = HIGH

7.6.16 Program Memory

Address 10H – 6FH

Reset values 00H

Please see *LED Controller Programming Commands* for further information.

Command	15	14	13	12	11	10	9	8	7	6	5	4	3	2	1	0
Ramp Wait	0	Pre-scale	Step time						Sign	Increment						
Set PWM	0	1	0						PWM Value							
Go toStart	0	0	0						0	0	0	0	0	0	0	0
Branch	1	0	1	Loop Count						X	Step number					
End	1	1	0	Int	Reset	X										
Trigger	1	1	1	Wait for trigger on channels 5-0						Send trigger on channels 5-0						X

8 Application and Implementation

NOTE

Information in the following applications sections is not part of the TI component specification, and TI does not warrant its accuracy or completeness. TI's customers are responsible for determining suitability of components for their purposes. Customers should validate and test their design implementation to confirm system functionality.

8.1 Application Information

The LP5521 is designed as a autonomous lighting controller for mobile devices. These devices need extremely small form factor; therefore, the LP5521 is designed to require only 4 small capacitors: input, output, and two fly-capacitors for charge pump. If charge pump is not needed in the application (input voltage is high enough for driving LEDs), the charge pump capacitors can be omitted thus reducing the solution size even further. LED can be RGB LED or any color if desired.

8.2 Typical Applications

Application with Charge Pump shows an example of typical application which uses charge pump to get high enough voltage to drive LEDs. The device is powered from single Li-Ion battery with voltage range of 2.7 V to 4.2 V.

8.2.1 Application with Charge Pump

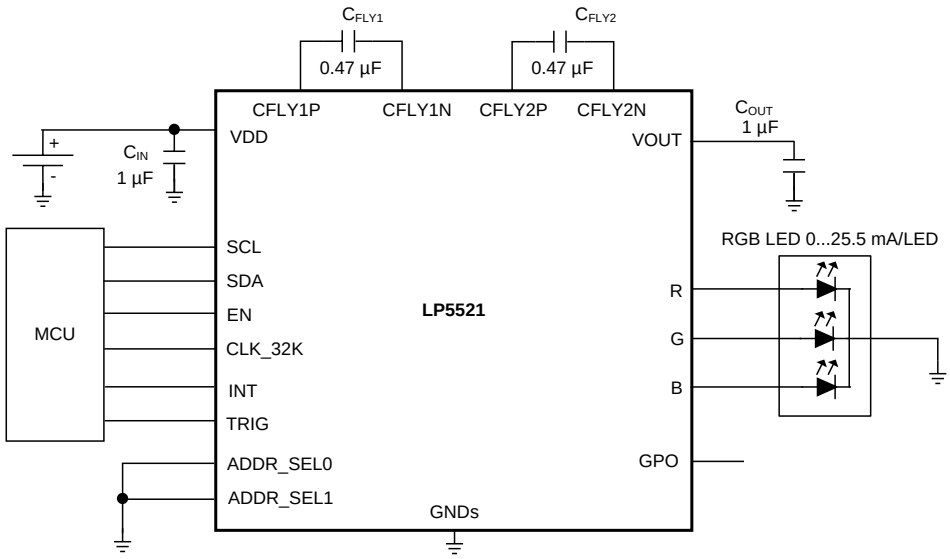

Copyright © 2016, Texas Instruments Incorporated

Figure 26. LP5521 Typical Application Schematic With Charge Pump

8.2.1.1 Design Requirements

DESIGN PARAMETER	EXAMPLE VALUE
Input voltage range	2.7 V to 4.2 V (single Li-Ion cell battery)
LED V_F (maximum)	3.6 V
LED current	25.5 mA maximum
Input capacitor	C_{IN} = 1 µF
Output capacitor	C_{OUT} = 1 µF
Fly capacitors	C_{FLY1} = C_{FLY2} = 470 nF
Charge pump mode	Automatic or 1.5×

Copyright © 2007–2016, Texas Instruments Incorporated

8.2.1.2 Detailed Design Procedure

8.2.1.2.1 Capacitor Selection

The LP5521 requires 4 external capacitors for proper operation (C_{IN} = C_{OUT} = 1 µF, C_{FLY1} = C_{FLY2} = 470 nF). Surface-mount multi-layer ceramic capacitors are recommended. These capacitors are small, inexpensive and have very low equivalent series resistance (ESR < 20 mΩ typical). Tantalum capacitors, OS-CON capacitors, and aluminum electrolytic capacitors are not recommended for use with the LP5521 due to their high ESR, as compared to ceramic capacitors.

For most applications, ceramic capacitors with X7R or X5R temperature characteristic are preferred for use with the LP5521. These capacitors have tight capacitance tolerance (as good as ±10%) and hold their value over temperature (X7R: ±15% over –55°C to 125°C; X5R: ±15% over –55°C to 85°C).

Capacitors with Y5V or Z5U temperature characteristic are generally not recommended for use with the LP5521. Capacitors with these temperature characteristics typically have wide capacitance tolerance (+80%, –20%) and vary significantly over temperature (Y5V: +22%, –82% over –30°C to +85°C range; Z5U: +22%, –56% over +10°C to +85°C range). Under some conditions, a nominal 1-µF Y5V or Z5U capacitor could have a capacitance of only 0.1 µF. Such detrimental deviation is likely to cause Y5V and Z5U capacitors to fail to meet the minimum capacitance requirements of the LP5521.

The minimum voltage rating acceptable for all capacitors is 6.3 V. The recommended voltage rating of the output capacitor is 10 V to account for DC bias capacitance losses.

NOTE

Some ceramic capacitors, especially those in small packages, exhibit a strong capacitance reduction with the increased applied voltage (DC bias effect). The capacitance value can fall below half of the nominal capacitance. Choose output and input capacitor with DC bias voltage effect better than –50% at 5 V voltage (0.5 µF at 5 V).

Table 36. External Component Examples

MODEL	TYPE	VENDOR	VOLTAGE RATING	SIZE INCH (mm)
1 µF for C_{OUT} and C_{IN}				
C1005X5R1A105K	Ceramic X5R	TDK	10 V	0402 (1005)
ECJ0EB1A105M	Ceramic X5R	Panasonic	10 V	0402 (1005)
ECJUVBPA105M	Ceramic X5R, array of two	Panasonic	10 V	0504
470 nF for C_{FLY1-2}				
C1005X5R1A474K	Ceramic X5R	TDK	10 V	0402 (1005)
ECJ0EB0J474K	Ceramic X5R	Panasonic	10 V	0402 (1005)
LEDs	User Defined			

8.2.1.3 Application Curves

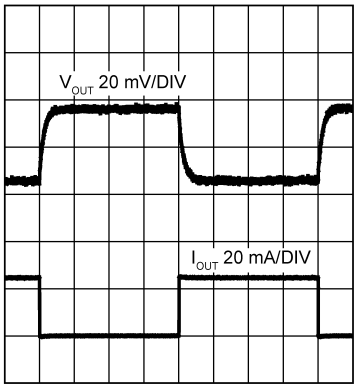

Figure 27. Charge Pump Load Transient Response in 1.5× Mode (0 to 25.5 mA)

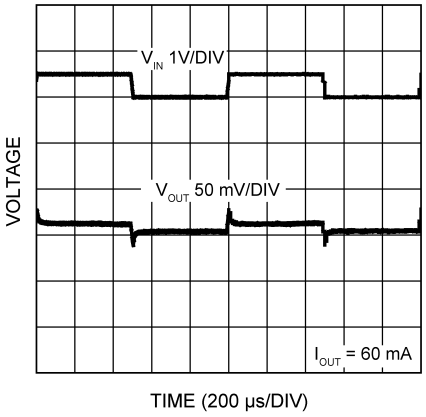

Figure 28. Charge Pump Line Transient Response 1.5× Mode (V_{IN} 3.5V to 4 V)

8.2.2 Application Without Charge Pump

In this application example the input voltage is high enough to drive the LEDs even without charge pump. In that case the charge pump components are omitted, allowing savings on bill-of-material and also board space. Charge pump must be set to 1× mode (bypass) in this case.

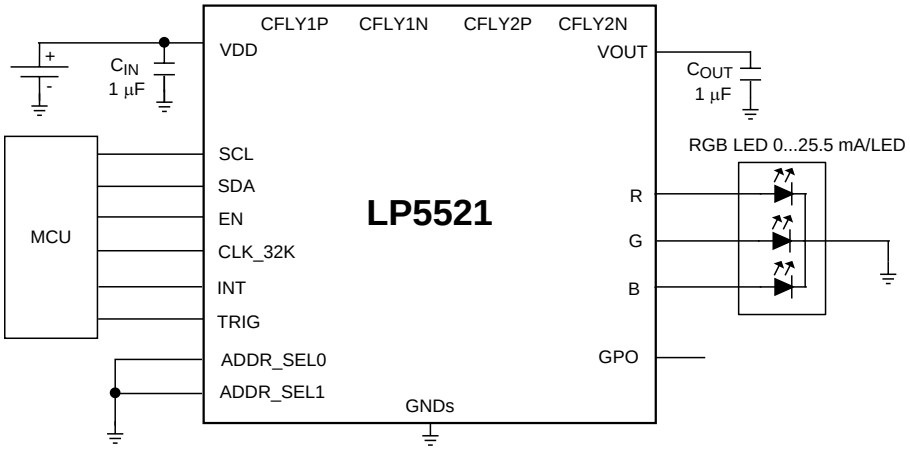

Copyright © 2016, Texas Instruments Incorporated

Figure 29. Typical Application Schematic Without Charge Pump

8.2.2.1 Design Requirements

DESIGN PARAMETER	EXAMPLE VALUE
Input voltage range	4.5 V to 5.5 V
LED V_F (max)	3.6 V
LED current	25.5 mA maximum
Input capacitor	C_{IN} = 1 µF
Output capacitor	C_{OUT} = 1 µF
Fly capacitors	none
Charge pump mode	1X

Copyright © 2007–2016, Texas Instruments Incorporated

8.2.2.2 Detailed Design Procedures

Selecting input and output capacitors follows the same procedure as in the application with charge pump.

8.3 Initialization Setup

8.3.1 Program Load and Execution Example

1. **Startup Device and Configure Device to SRAM Write Mode:**
   - Supply e.g. 3.6 V to VDD
   - Supply e.g. 1.8 V to EN
   - Wait 1 ms (startup delay)
   - Generate 32 kHz clock to CLK_32K pin
   - Write to address 00H 0100 0000b (enable LP5521)
   - Wait 500 µs (startup delay)
   - Write to address 01H 0001 0000b (Configure R channel into "Load program to SRAM" mode)
2. **Program Load to SRAM (see Figure 30):**
   - Write to address 10H 0000 0011b (1st ramp command 8 MSB)
   - Write to address 11H 0111 1111b (1st ramp command 8 LSB)
   - Write to address 12H 0100 1101b (1st wait command 8 MSB)
   - Write to address 13H 0000 0000b (1st wait command 8 LSB)
   - Write to address 14H 0000 0011b (2nd ramp command 8 MSB)
   - Write to address 15H 1111 1111b (2nd ramp command 8 LSB)
   - Write to address 16H 0110 0000b (2nd wait command 8 MSB)
   - Write to address 17H 0000 0000b (2nd wait command 8 LSB)
3. **Enable Powersave, charge pump automatic mode (1x / 1.5x) and use external 32 kHz clock:**
   - Write to address 08H 0011 1000b
4. **Run program:**
   - Write to address 01H 0010 0000b (Configure LED controller operation mode to "Run program" in R channel
   - Write to address 00H 0110 0000b (Configure program execution mode from "Hold" to "Run" in R channel

LP5521 will generate 1100 ms long LED pattern which will be repeated infinitely. LED pattern is illustrated in Figure 30.

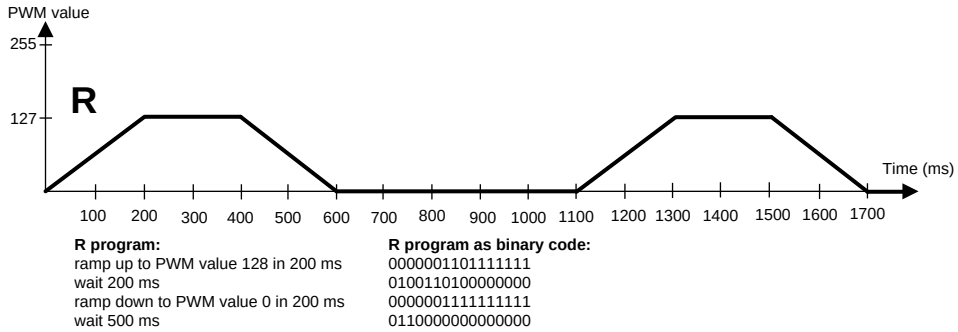

Figure 30. Sequence Diagram

8.3.2 Direct PWM Control Example

1. **Start up device:**
   - Supply, for example, 3.6 V to VDD
   - Supply, for example,1.8 V to EN
   - Wait 1 ms (start-up delay)
   - Write to address 00H 0100 0000b (enable LP5521)

Initialization Setup (continued)

- Wait 500 µs (start-up delay)

2. **Enable charge pump 1.5x mode and use internal clock:**
   - Write to address 08H 0001 0001b
3. **Direct PWM control:**
   - Write to address 01H 0011 1111b (Configure R, G and B channels into "Direct PWM control mode")
4. **Write PWM values:**
   - Write to address 02H 1000 0000b (R driver PWM 50% duty cycle)
   - Write to address 03H 1100 0000b (G driver PWM 75% duty cycle)
   - Write to address 04H 1111 1111b (B driver PWM 100% duty cycle)

LEDs are turned on after the PWM values are written. Changes to the PWM value registers are reflected immediately to the LED brightness. Default LED current (17.5 mA) is used for LED outputs, if no other values are written.

9 Power Supply Recommendations

The device is designed to operate from an input voltage supply range between 2.7 V and 5.5V. In a typical application this is from single Li-ion battery cell. This input supply must be well regulated and able to withstand maximum input current and maintain stable voltage without voltage drop even at load transition condition (start-up or rapid brightness change). The resistance of the input supply rail must be low enough that the input current transient does not cause drop below a 2.7-V level in the LP5521 supply voltage.

10 Layout

10.1 Layout Guidelines

Place capacitors as close to the LP5521 device as possible to minimize the current loops. Figure 31 shows an example of LP5521 PCB layout and component placement.

10.2 Layout Example

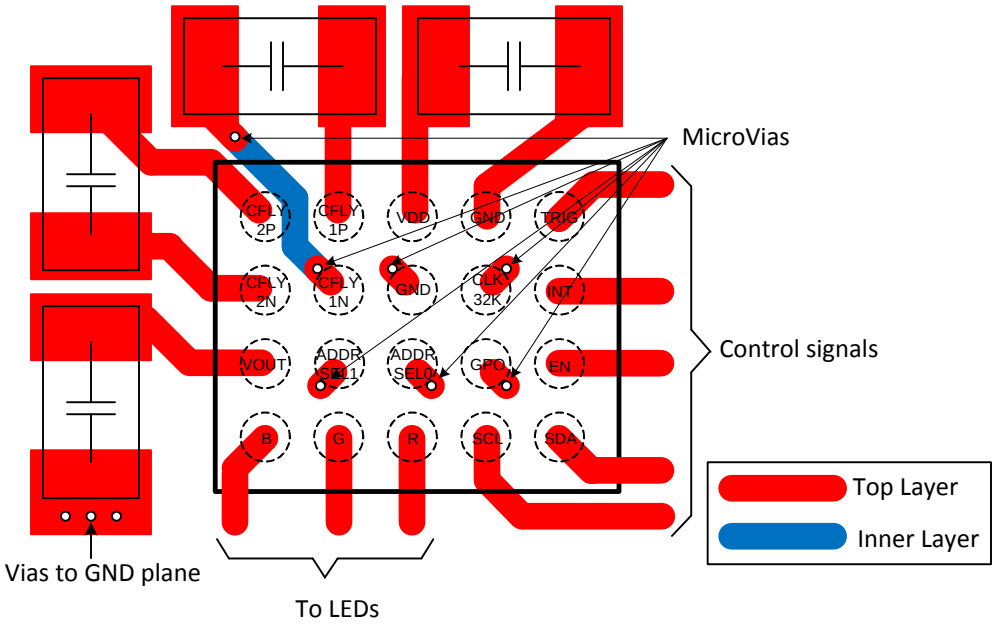

Figure 31. Example of Typical Layout

Copyright © 2007–2016, Texas Instruments Incorporated

11 Device and Documentation Support

11.1 Device Support

11.1.1 Third-Party Products Disclaimer

TI'S PUBLICATION OF INFORMATION REGARDING THIRD-PARTY PRODUCTS OR SERVICES DOES NOT CONSTITUTE AN ENDORSEMENT REGARDING THE SUITABILITY OF SUCH PRODUCTS OR SERVICES OR A WARRANTY, REPRESENTATION OR ENDORSEMENT OF SUCH PRODUCTS OR SERVICES, EITHER ALONE OR IN COMBINATION WITH ANY TI PRODUCT OR SERVICE.

11.2 Documentation Support

11.2.1 Related Documentation

- See *LP5521 Programming Considerations* for more information about programming of the device.
- See *LP5521 Power Efficiency Consideration* for more information about powering the device and partitioning the system.
- See *LP5521TM Evaluation Kit* for more information about evaluation kit for LP5521TM.

11.3 Receiving Notification of Documentation Updates

To receive notification of documentation updates, navigate to the device product folder on ti.com. In the upper right corner, click on *Alert me* to register and receive a weekly digest of any product information that has changed. For change details, review the revision history included in any revised document.

11.4 Community Resources

The following links connect to TI community resources. Linked contents are provided "AS IS" by the respective contributors. They do not constitute TI specifications and do not necessarily reflect TI's views; see TI's Terms of Use.

TI E2E™ Online Community ***TI's Engineer-to-Engineer (E2E) Community.*** Created to foster collaboration among engineers. At e2e.ti.com, you can ask questions, share knowledge, explore ideas and help solve problems with fellow engineers.

Design Support ***TI's Design Support*** Quickly find helpful E2E forums along with design support tools and contact information for technical support.

11.5 Trademarks

E2E is a trademark of Texas Instruments.
All other trademarks are the property of their respective owners.

11.6 Electrostatic Discharge Caution

These devices have limited built-in ESD protection. The leads should be shorted together or the device placed in conductive foam during storage or handling to prevent electrostatic damage to the MOS gates.

11.7 Glossary

SLYZ022 — *TI Glossary*.

This glossary lists and explains terms, acronyms, and definitions.

12 Mechanical, Packaging, and Orderable Information

The following pages include mechanical, packaging, and orderable information. This information is the most current data available for the designated devices. This data is subject to change without notice and revision of this document. For browser-based versions of this data sheet, refer to the left-hand navigation.

PACKAGING INFORMATION

Orderable part number	Status (1)	Material type (2)	Package | Pins	Package qty | Carrier	RoHS (3)	Lead finish/ Ball material (4)	MSL rating/ Peak reflow (5)	Op temp (°C)	Part marking (6)
LP5521TM/NOPB	Active	Production	DSBGA (YFQ) | 20	250 | SMALL T&R	Yes	SNAGCU	Level-1-260C-UNLIM	-30 to 85	5521
LP5521TM/NOPB.A	Active	Production	DSBGA (YFQ) | 20	250 | SMALL T&R	Yes	SNAGCU	Level-1-260C-UNLIM	-30 to 85	5521
LP5521TM/NOPB.B	Active	Production	DSBGA (YFQ) | 20	250 | SMALL T&R	Yes	SNAGCU	Level-1-260C-UNLIM	-30 to 85	5521
LP5521TMX/NOPB	Active	Production	DSBGA (YFQ) | 20	3000 | LARGE T&R	Yes	SNAGCU	Level-1-260C-UNLIM	-30 to 85	5521
LP5521TMX/NOPB.A	Active	Production	DSBGA (YFQ) | 20	3000 | LARGE T&R	Yes	SNAGCU	Level-1-260C-UNLIM	-30 to 85	5521
LP5521TMX/NOPB.B	Active	Production	DSBGA (YFQ) | 20	3000 | LARGE T&R	Yes	SNAGCU	Level-1-260C-UNLIM	-30 to 85	5521
LP5521YQ/NOPB	Active	Production	WQFN (NJA) | 24	1000 | SMALL T&R	Yes	SNAGCU	Level-1-260C-UNLIM	-30 to 85	L5521YQ
LP5521YQ/NOPB.A	Active	Production	WQFN (NJA) | 24	1000 | SMALL T&R	Yes	SNAGCU	Level-1-260C-UNLIM	-30 to 85	L5521YQ
LP5521YQX/NOPB	Active	Production	WQFN (NJA) | 24	4500 | LARGE T&R	Yes	SNAGCU	Level-1-260C-UNLIM	-30 to 85	L5521YQ
LP5521YQX/NOPB.A	Active	Production	WQFN (NJA) | 24	4500 | LARGE T&R	Yes	SNAGCU	Level-1-260C-UNLIM	-30 to 85	L5521YQ

(1) **Status:** For more details on status, see our product life cycle.

(2) **Material type:** When designated, preproduction parts are prototypes/experimental devices, and are not yet approved or released for full production. Testing and final process, including without limitation quality assurance, reliability performance testing, and/or process qualification, may not yet be complete, and this item is subject to further changes or possible discontinuation. If available for ordering, purchases will be subject to an additional waiver at checkout, and are intended for early internal evaluation purposes only. These items are sold without warranties of any kind.

(3) **RoHS values:** Yes, No, RoHS Exempt. See the TI RoHS Statement for additional information and value definition.

(4) **Lead finish/Ball material:** Parts may have multiple material finish options. Finish options are separated by a vertical ruled line. Lead finish/Ball material values may wrap to two lines if the finish value exceeds the maximum column width.

(5) **MSL rating/Peak reflow:** The moisture sensitivity level ratings and peak solder (reflow) temperatures. In the event that a part has multiple moisture sensitivity ratings, only the lowest level per JEDEC standards is shown. Refer to the shipping label for the actual reflow temperature that will be used to mount the part to the printed circuit board.

(6) **Part marking:** There may be an additional marking, which relates to the logo, the lot trace code information, or the environmental category of the part.

Multiple part markings will be inside parentheses. Only one part marking contained in parentheses and separated by a "~" will appear on a part. If a line is indented then it is a continuation of the previous line and the two combined represent the entire part marking for that device.

Important Information and Disclaimer: The information provided on this page represents TI's knowledge and belief as of the date that it is provided. TI bases its knowledge and belief on information provided by third parties, and makes no representation or warranty as to the accuracy of such information. Efforts are underway to better integrate information from third parties. TI has taken and continues to take reasonable steps to provide representative

and accurate information but may not have conducted destructive testing or chemical analysis on incoming materials and chemicals. TI and TI suppliers consider certain information to be proprietary, and thus CAS numbers and other limited information may not be available for release.

In no event shall TI's liability arising out of such information exceed the total purchase price of the TI part(s) at issue in this document sold by TI to Customer on an annual basis.

TAPE AND REEL INFORMATION

REEL DIMENSIONS

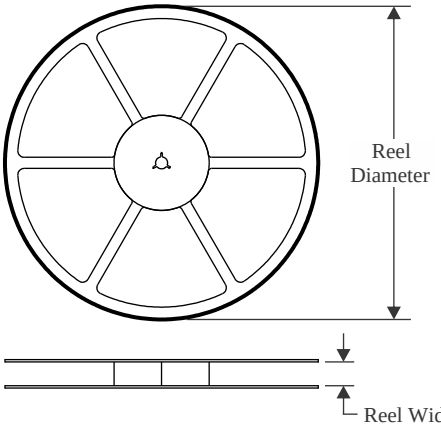

TAPE DIMENSIONS

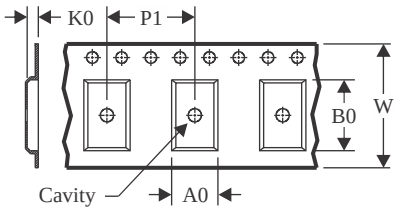

A0	Dimension designed to accommodate the component width
B0	Dimension designed to accommodate the component length
K0	Dimension designed to accommodate the component thickness
W	Overall width of the carrier tape
P1	Pitch between successive cavity centers

QUADRANT ASSIGNMENTS FOR PIN 1 ORIENTATION IN TAPE

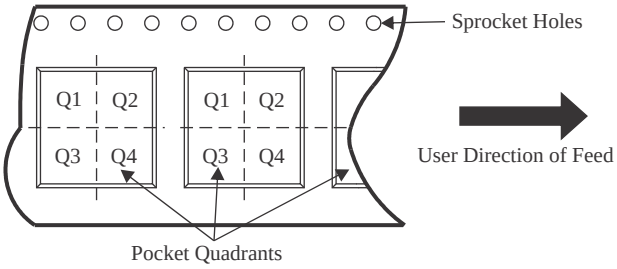

*All dimensions are nominal

Device	Package Type	Package Drawing	Pins	SPQ	Reel Diameter (mm)	Reel Width W1 (mm)	A0 (mm)	B0 (mm)	K0 (mm)	P1 (mm)	W (mm)	Pin1 Quadrant
LP5521TM/NOPB	DSBGA	YFQ	20	250	178.0	8.4	1.96	2.31	0.76	4.0	8.0	Q1
LP5521TMX/NOPB	DSBGA	YFQ	20	3000	178.0	8.4	1.96	2.31	0.76	4.0	8.0	Q1
LP5521YQ/NOPB	WQFN	NJA	24	1000	178.0	12.4	4.3	5.3	1.3	8.0	12.0	Q1
LP5521YQX/NOPB	WQFN	NJA	24	4500	330.0	12.4	4.3	5.3	1.3	8.0	12.0	Q1

TAPE AND REEL BOX DIMENSIONS

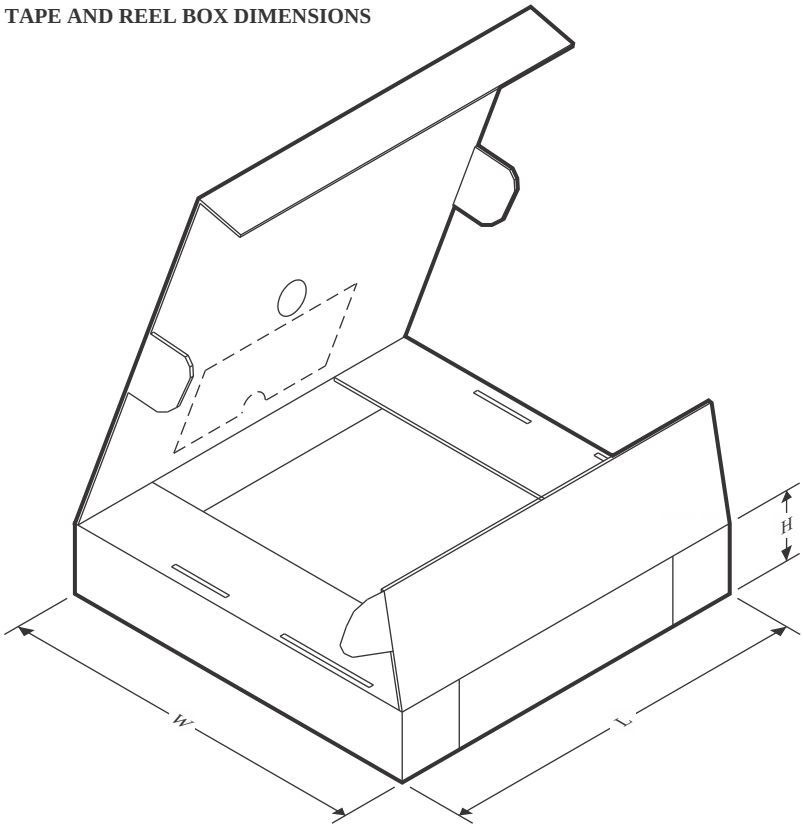

*All dimensions are nominal

Device	Package Type	Package Drawing	Pins	SPQ	Length (mm)	Width (mm)	Height (mm)
LP5521TM/NOPB	DSBGA	YFQ	20	250	208.0	191.0	35.0
LP5521TMX/NOPB	DSBGA	YFQ	20	3000	208.0	191.0	35.0
LP5521YQ/NOPB	WQFN	NJA	24	1000	208.0	191.0	35.0
LP5521YQX/NOPB	WQFN	NJA	24	4500	367.0	367.0	35.0

NJA 24

WQFN - 0.8 mm max height

PLASTIC QUAD FLATPACK - NO LEAD

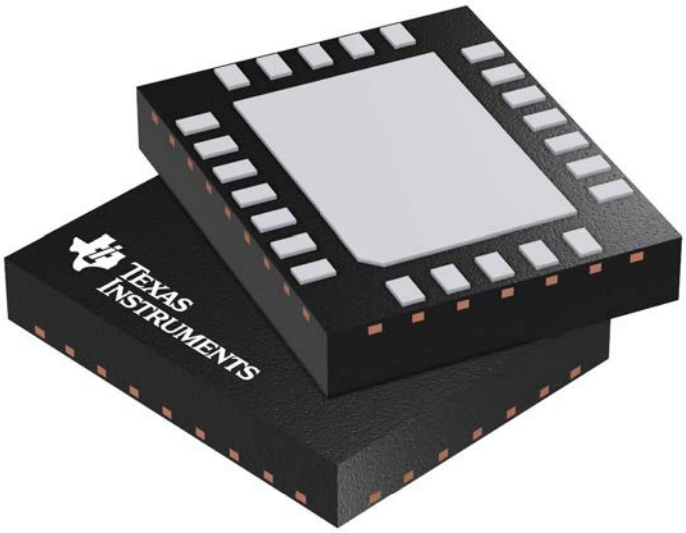

Images above are just a representation of the package family, actual package may vary.
Refer to the product data sheet for package details.

4215212/A

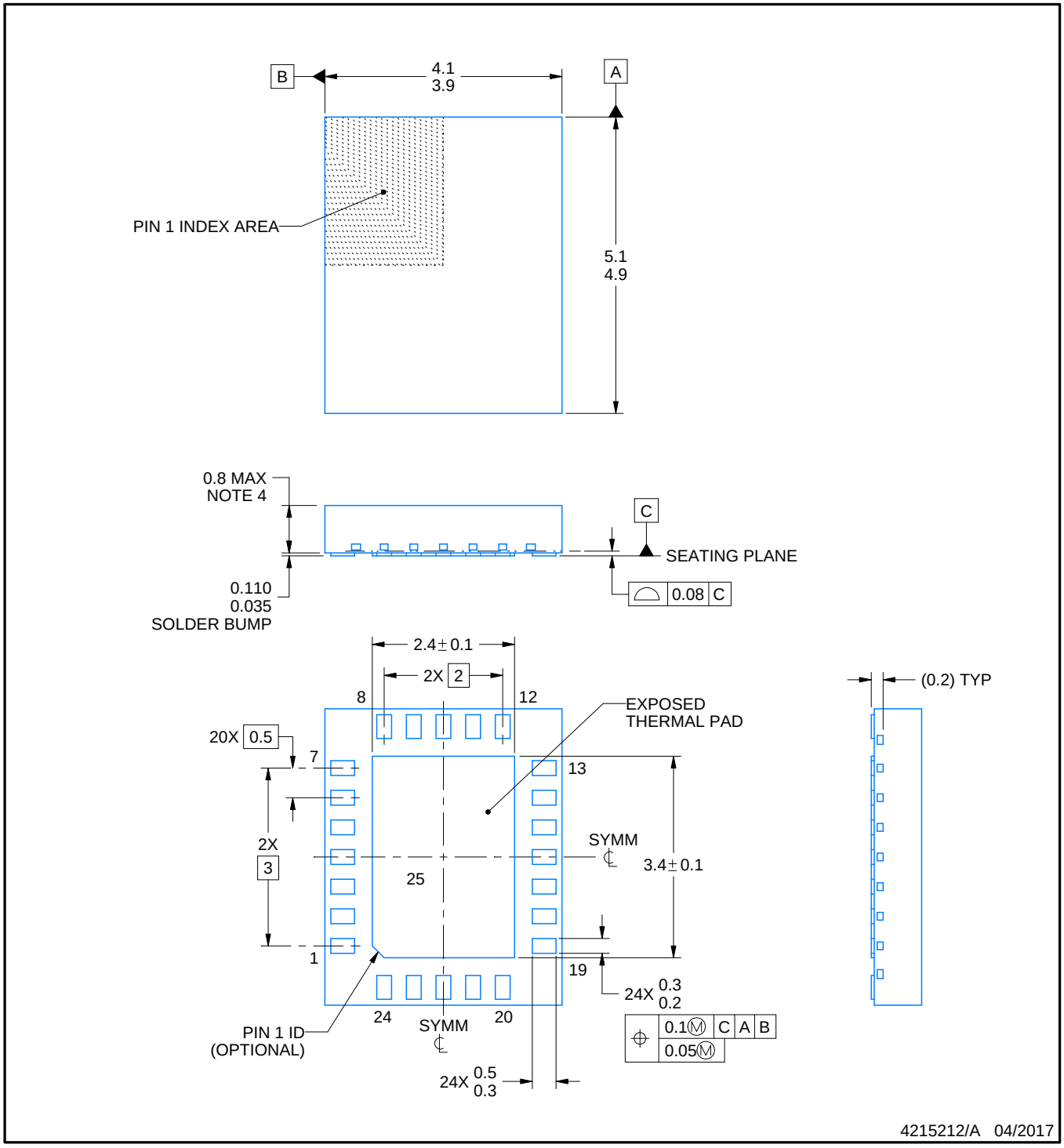

NOTES:

1. All linear dimensions are in millimeters. Any dimensions in parenthesis are for reference only. Dimensioning and tolerancing per ASME Y14.5M.
2. This drawing is subject to change without notice.
3. The package thermal pad must be soldered to the printed circuit board for optimal thermal and mechanical performance.
4. Package maximum height does not include the solder bump height.

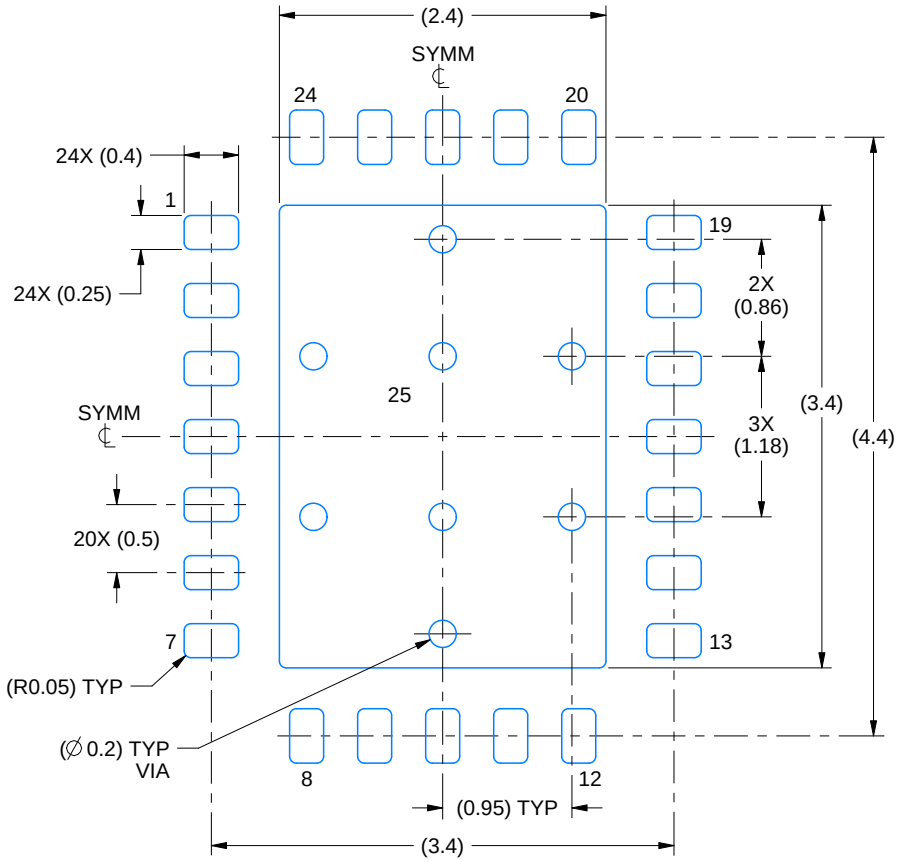

LAND PATTERN EXAMPLE
EXPOSED METAL SHOWN
SCALE:18X

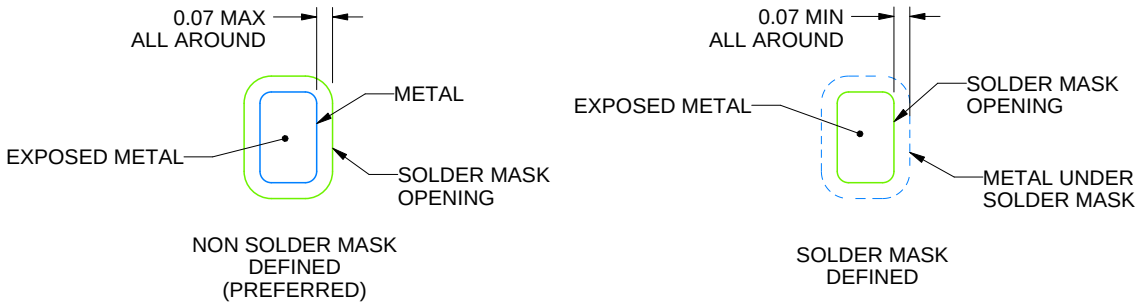

SOLDER MASK DETAILS

4215212/A 04/2017

NOTES: (continued)

5. This package is designed to be soldered to a thermal pad on the board. For more information, see Texas Instruments literature number SLUA271 (www.ti.com/lit/slua271).
6. Vias are optional depending on application, refer to device data sheet. It is recommended that vias under paste be filled, plugged or tented.

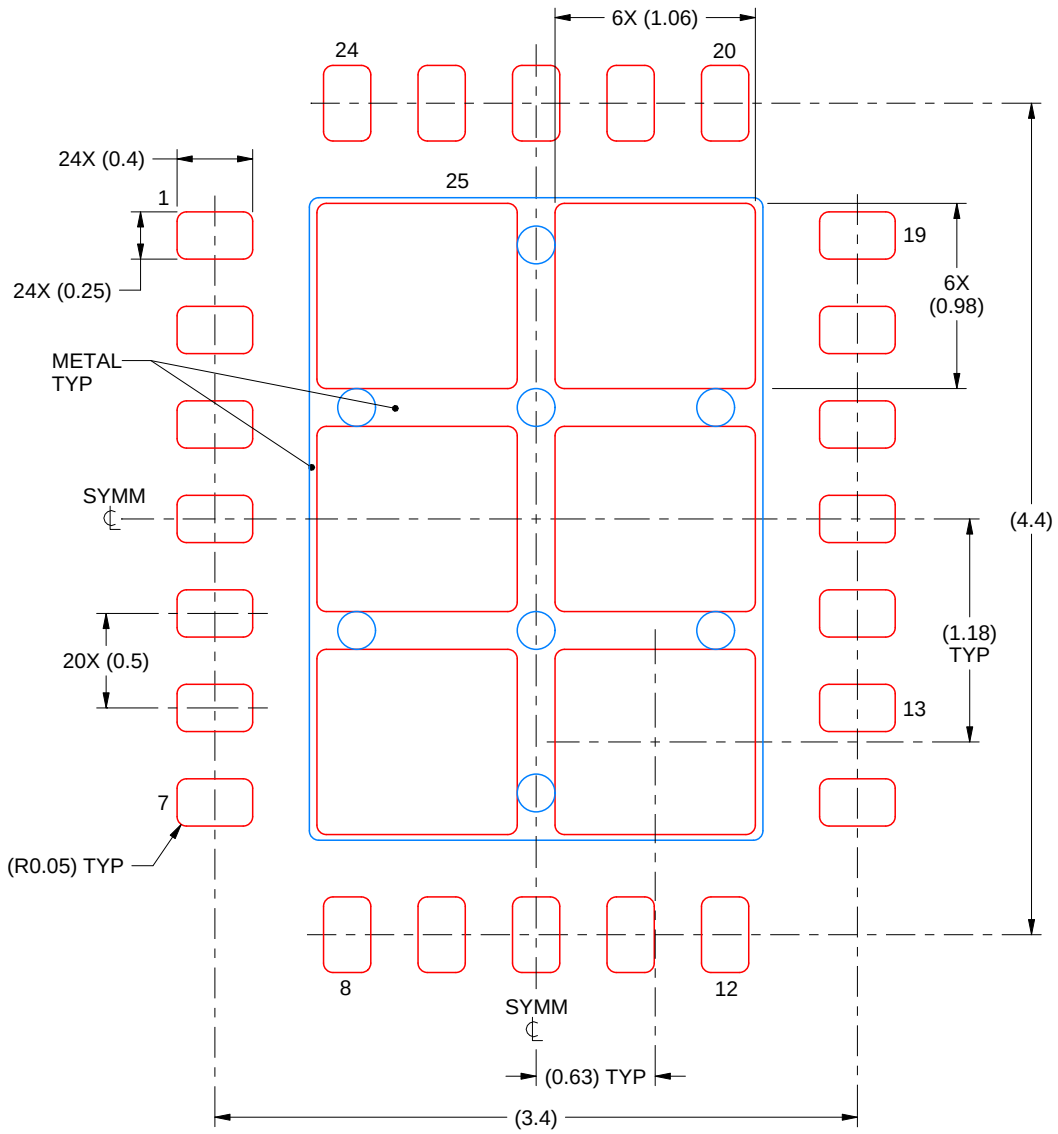

SOLDER PASTE EXAMPLE
BASED ON 0.1 mm THICK STENCIL

EXPOSED PAD 25:
76% PRINTED SOLDER COVERAGE BY AREA UNDER PACKAGE
SCALE:25X

4215212/A 04/2017

NOTES: (continued)

7. Laser cutting apertures with trapezoidal walls and rounded corners may offer better paste release. IPC-7525 may have alternate design recommendations.

YFQ0020

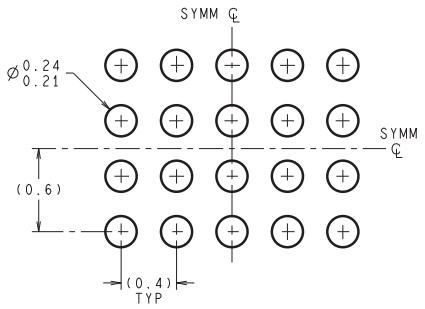

LAND PATTERN RECOMMENDATION

DIMENSIONS ARE IN MILLIMETERS
DIMENSIONS IN ( ) FOR REFERENCE ONLY

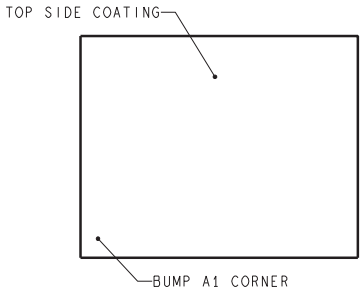

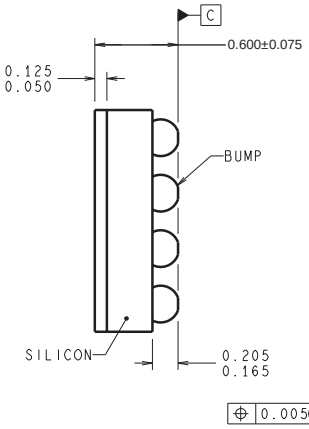

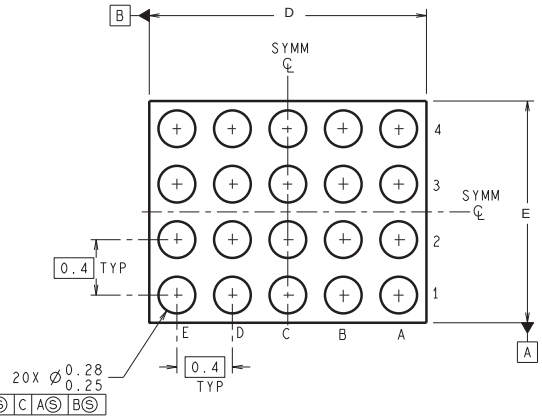

TMD20XXX (Rev D)

D: Max = 2.093 mm, Min =2.033 mm

E: Max = 1.733 mm, Min =1.672 mm

4215083/A 12/12

NOTES: A. All linear dimensions are in millimeters. Dimensioning and tolerancing per ASME Y14.5M-1994.
B. This drawing is subject to change without notice.

IMPORTANT NOTICE AND DISCLAIMER

TI PROVIDES TECHNICAL AND RELIABILITY DATA (INCLUDING DATA SHEETS), DESIGN RESOURCES (INCLUDING REFERENCE DESIGNS), APPLICATION OR OTHER DESIGN ADVICE, WEB TOOLS, SAFETY INFORMATION, AND OTHER RESOURCES “AS IS” AND WITH ALL FAULTS, AND DISCLAIMS ALL WARRANTIES, EXPRESS AND IMPLIED, INCLUDING WITHOUT LIMITATION ANY IMPLIED WARRANTIES OF MERCHANTABILITY, FITNESS FOR A PARTICULAR PURPOSE OR NON-INFRINGEMENT OF THIRD PARTY INTELLECTUAL PROPERTY RIGHTS.

These resources are intended for skilled developers designing with TI products. You are solely responsible for (1) selecting the appropriate TI products for your application, (2) designing, validating and testing your application, and (3) ensuring your application meets applicable standards, and any other safety, security, regulatory or other requirements.

These resources are subject to change without notice. TI grants you permission to use these resources only for development of an application that uses the TI products described in the resource. Other reproduction and display of these resources is prohibited. No license is granted to any other TI intellectual property right or to any third party intellectual property right. TI disclaims responsibility for, and you will fully indemnify TI and its representatives against, any claims, damages, costs, losses, and liabilities arising out of your use of these resources.

TI’s products are provided subject to TI’s Terms of Sale or other applicable terms available either on ti.com or provided in conjunction with such TI products. TI’s provision of these resources does not expand or otherwise alter TI’s applicable warranties or warranty disclaimers for TI products.

TI objects to and rejects any additional or different terms you may have proposed.

Mailing Address: Texas Instruments, Post Office Box 655303, Dallas, Texas 75265
Copyright © 2025, Texas Instruments Incorporated