TLC696x2/4/8-Q1 16-Channel, 2/4/8 Time-Multiplexing, Automotive Local Dimming Backlight LED Driver

1 Features

- AEC-Q100 qualified for automotive applications:
  - Device temperature grade 1: –40°C to +125°C, T_A
  - Device HBM ESD classification level 2
  - Device CDM ESD classification level C4B
- Functional Safety-Capable:
  - Documentation available to aid functional safety system design
- Operating voltage V_{CC} range: 3V to 5.5V
- 16 constant current sinks with high precision:
  - Maximum output current / voltage:
    - 30mA / 20V: TLC69602/4/8-Q1
    - 60mA / 20V: TLC69612/4/8-Q1
    - 30mA / 50V: TLC69652/4/8-Q1
    - 60mA / 50V: TLC69662/4/8-Q1
  - Device-to-device error: ±2% (typ.)
  - Channel-to-channel error: ±2% (typ.)
- Flexible dimming control:
  - Global 8-bit Maximum Current (MC) setting
  - Brightness resolution: up to 15-bit
  - PWM / Hybrid control mode
- High speed daisy chain interface:
  - I/O voltage compatible with: 1.8V / 3.3V
  - Data transfer rate: up to 20MHz
- High system efficiency:
  - Adaptive headroom voltage control (AHVC)
  - Ultra-low device power consumption:
    - Standby mode: I_{CC} ≤ 200µA
    - Normal mode: I_{CC} ≤ 3.5mA
- EMI enhancement:
  - Programmable interface driving capability
  - Integrated 4 phase-shifting schemes
- Diagnostics:
  - LED open / short detection for each zone
  - Device thermal shutdown detection
  - Report interface option:
    - UART and interrupt pin (INT)
    - Two-wire output: CLK_O and SOUT

2 Applications

- LCD local dimming backlight:
  - Automotive central information display
  - Automotive cluster display
  - Automotive head-up display

3 Description

The TLC696x8-Q1 is a family of LCD local dimming backlight driver compatible with TLC696x0-Q1 which is a scan MOSFET controller to achieve 2/4/8 time-multiplexing control. Each device integrates 16 constant current sinks with corresponding size of SRAM for brightness storage. The device connects to each other by two-wire serial interface in daisy chain topology and supports up to 1024 devices for more than 32,000 local dimming zones.

To optimize system efficiency, the device is equipped with adaptive headroom voltage control scheme to directly control DC/DC. Only the FB pin from last device in serial chain should be connected to DC/DC to achieve simplified system layout. The device also integrates minimum brightness update latency, black insertion and VRR features to improve display quality.

TLC696x2/4/8-Q1 has three error flags: LED open detection (LOD), LED short detection (LSD) and thermal shutdown detection (TSD) for diagnostic. The device implements two options for readback including UART/INT and SOUT/CLK_O which is programmable by register.

Device Information

PART NUMBER	PACKAGE(1)	BODY SIZE (NOM)
TLC696x2/4/8-Q1	WQFN (24) Wettable flank	4mm × 4mm
	HTSSOP (28)	9.7mm × 4.4mm

(1) For all available packages, see the orderable addendum at the end of the data sheet.

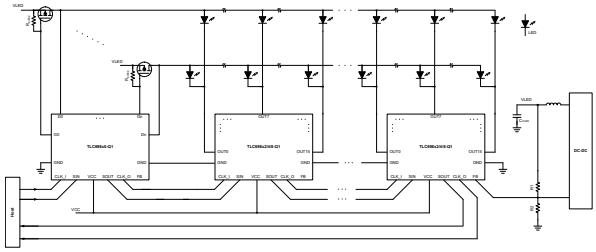

Simplified Schematic

An IMPORTANT NOTICE at the end of this data sheet addresses availability, warranty, changes, use in safety-critical applications, intellectual property matters and other important disclaimers. PRODUCTION DATA.

Table of Contents

1 Features.....1
2 Applications.....1
3 Description.....1
4 Device and Documentation Support.....3
4.1 Receiving Notification of Documentation Updates.....3
4.2 Support Resources.....3
4.3 Trademarks.....3
4.4 Electrostatic Discharge Caution.....3
4.5 Glossary.....3
5 Revision History.....3
6 Mechanical, Packaging, and Orderable Information.....4

Copyright © 2024 Texas Instruments Incorporated

4 Device and Documentation Support

TI offers an extensive line of development tools. Tools and software to evaluate the performance of the device, generate code, and develop solutions are listed below.

4.1 Receiving Notification of Documentation Updates

To receive notification of documentation updates, navigate to the device product folder on ti.com. Click on *Notifications* to register and receive a weekly digest of any product information that has changed. For change details, review the revision history included in any revised document.

4.2 Support Resources

TI E2E™ support forums are an engineer's go-to source for fast, verified answers and design help — straight from the experts. Search existing answers or ask your own question to get the quick design help you need.

Linked content is provided "AS IS" by the respective contributors. They do not constitute TI specifications and do not necessarily reflect TI's views; see TI's Terms of Use.

4.3 Trademarks

TI E2E™ is a trademark of Texas Instruments.
All trademarks are the property of their respective owners.

4.4 Electrostatic Discharge Caution

This integrated circuit can be damaged by ESD. Texas Instruments recommends that all integrated circuits be handled with appropriate precautions. Failure to observe proper handling and installation procedures can cause damage.

ESD damage can range from subtle performance degradation to complete device failure. Precision integrated circuits may be more susceptible to damage because very small parametric changes could cause the device not to meet its published specifications.

4.5 Glossary

TI Glossary This glossary lists and explains terms, acronyms, and definitions.

5 Revision History

NOTE: Page numbers for previous revisions may differ from page numbers in the current version.

DATE	REVISION	NOTES
June 2023	*	Initial Release

6 Mechanical, Packaging, and Orderable Information

The following pages include mechanical, packaging, and orderable information. This information is the most current data available for the designated devices. This data is subject to change without notice and revision of this document. For browser-based versions of this data sheet, refer to the left-hand navigation.

Copyright © 2024 Texas Instruments Incorporated

PACKAGE OUTLINE

PWP0028M

PowerPAD™ TSSOP - 1.2 mm max height

SMALL OUTLINE PACKAGE

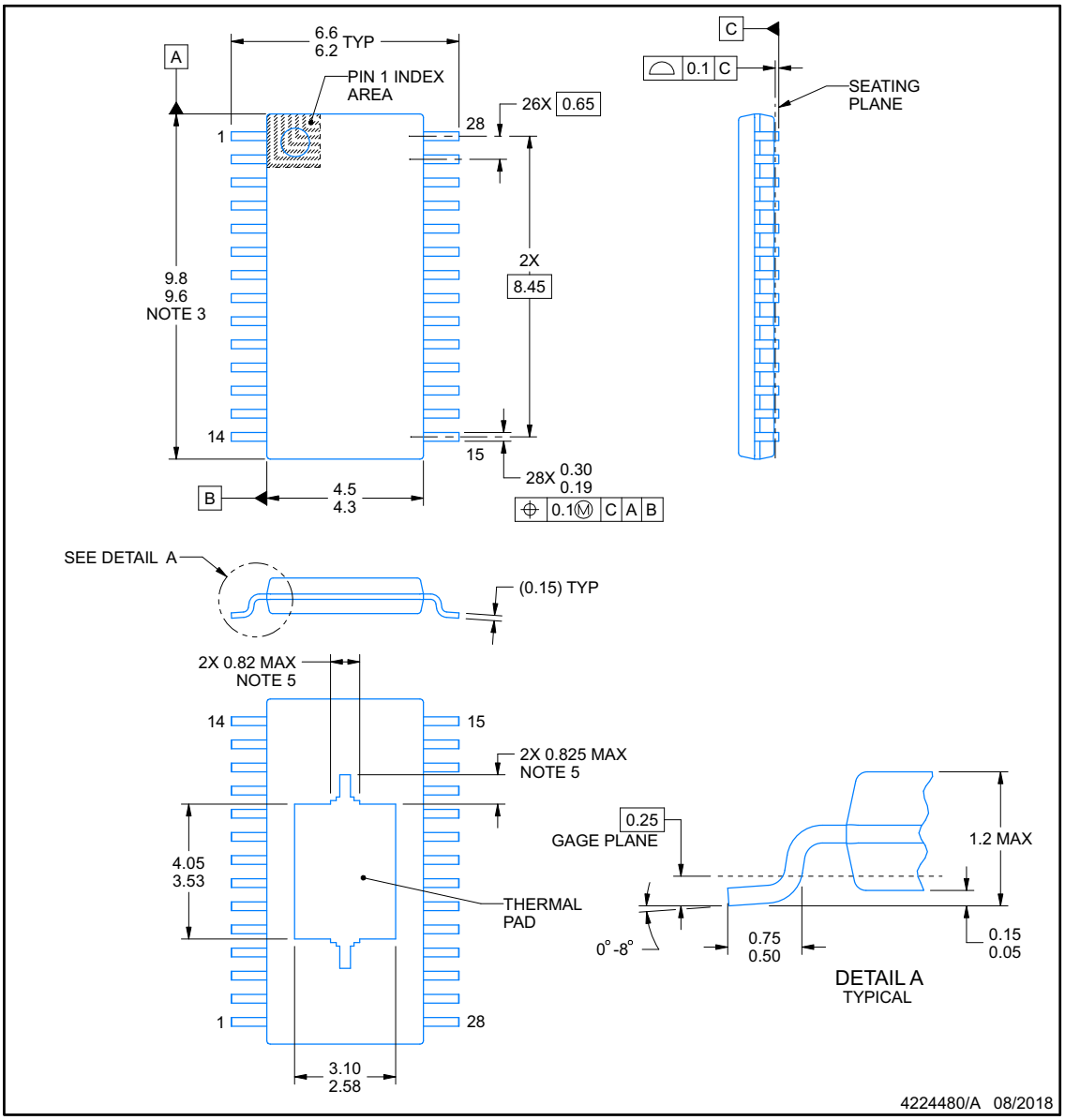

PowerPAD is a trademark of Texas Instruments.

NOTES:

1. All linear dimensions are in millimeters. Any dimensions in parenthesis are for reference only. Dimensioning and tolerancing per ASME Y14.5M.
2. This drawing is subject to change without notice.
3. This dimension does not include mold flash, protrusions, or gate burrs. Mold flash, protrusions, or gate burrs shall not exceed 0.15 mm per side.
4. Reference JEDEC registration MO-153.
5. Features may differ or may not be present.

Copyright © 2024 Texas Instruments Incorporated

EXAMPLE BOARD LAYOUT

PWP0028M

PowerPAD™ TSSOP - 1.2 mm max height

SMALL OUTLINE PACKAGE

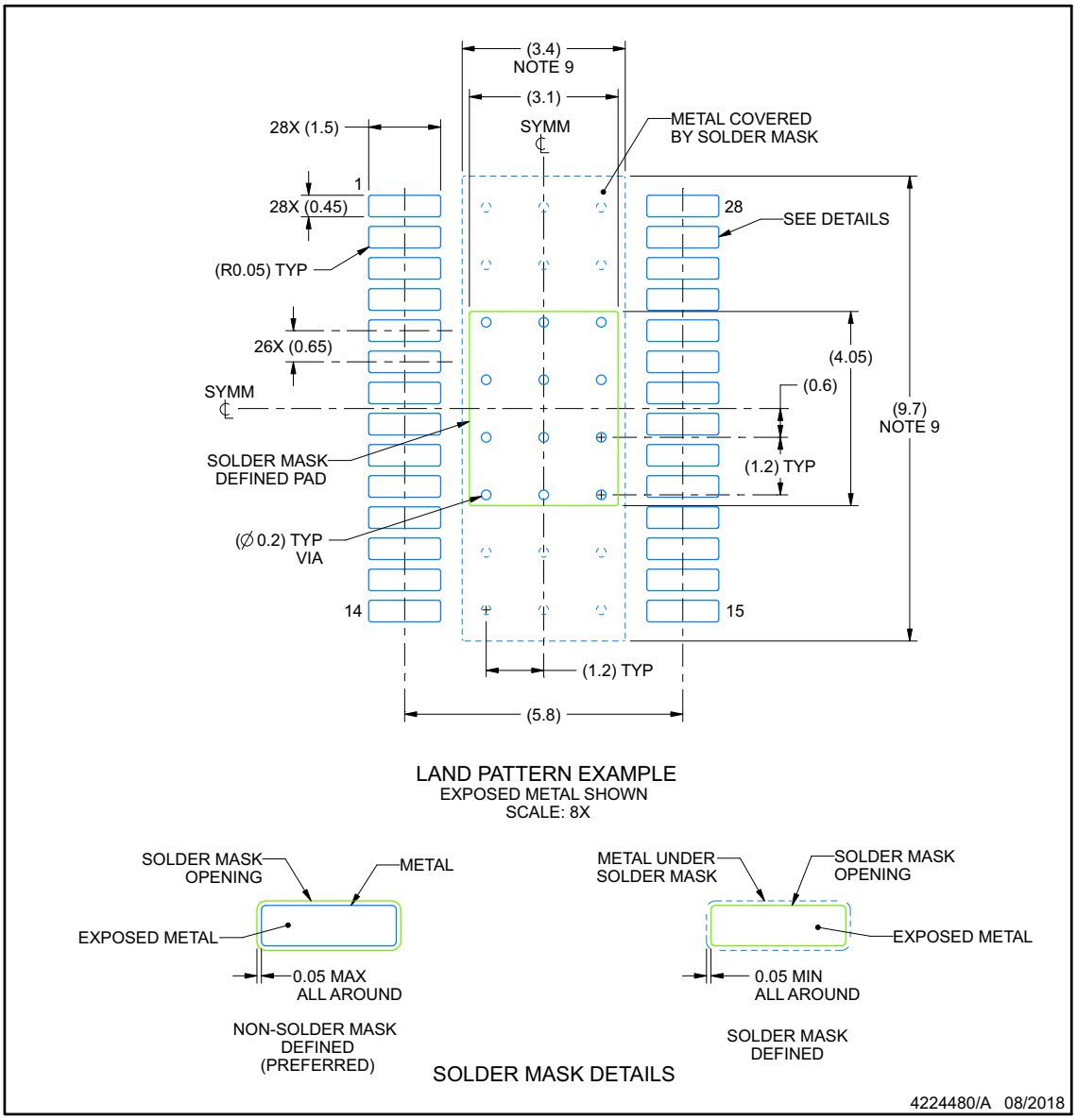

NOTES: (continued)

6. Publication IPC-7351 may have alternate designs.
7. Solder mask tolerances between and around signal pads can vary based on board fabrication site.
8. This package is designed to be soldered to a thermal pad on the board. For more information, see Texas Instruments literature numbers SLMA002 (www.ti.com/lit/slma002) and SLMA004 (www.ti.com/lit/slma004).
9. Size of metal pad may vary due to creepage requirement.
10. Vias are optional depending on application, refer to device data sheet. It is recommended that vias under paste be filled, plugged or tented.

Copyright © 2024 Texas Instruments Incorporated

EXAMPLE STENCIL DESIGN

PWP0028M **PowerPAD™ TSSOP - 1.2 mm max height**

SMALL OUTLINE PACKAGE

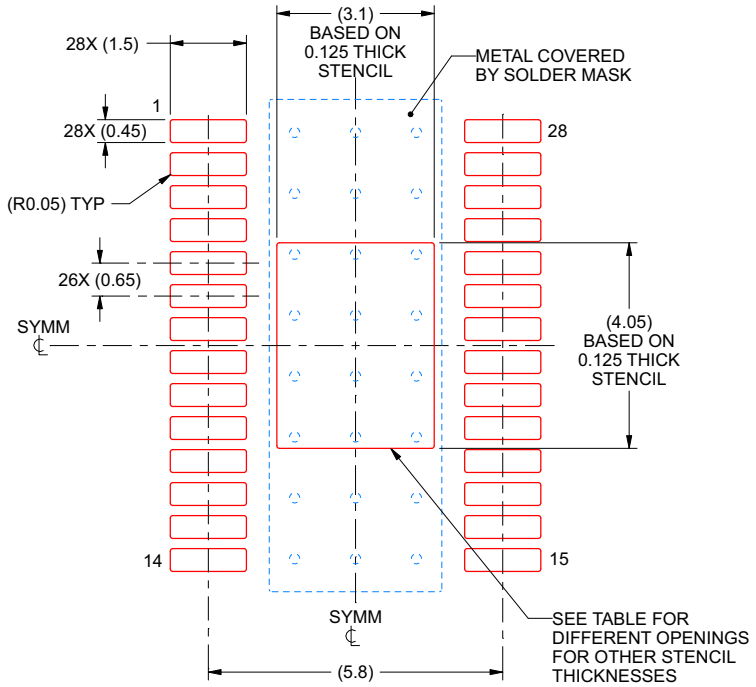

SOLDER PASTE EXAMPLE
BASED ON 0.125 mm THICK STENCIL
SCALE: 8X

STENCIL THICKNESS	SOLDER STENCIL OPENING
0.1	3.47 X 4.53
0.125	3.10 X 4.05 (SHOWN)
0.15	2.83 X 3.70
0.175	2.62 X 3.42

4224480/A 08/2018

NOTES: (continued)

11. Laser cutting apertures with trapezoidal walls and rounded corners may offer better paste release. IPC-7525 may have alternate design recommendations.
12. Board assembly site may have different recommendations for stencil design.

Copyright © 2024 Texas Instruments Incorporated

PACKAGE OUTLINE

RTW0024N

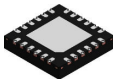

WQFN - 0.8 mm max height

PLASTIC QUAD FLATPACK - NO LEAD

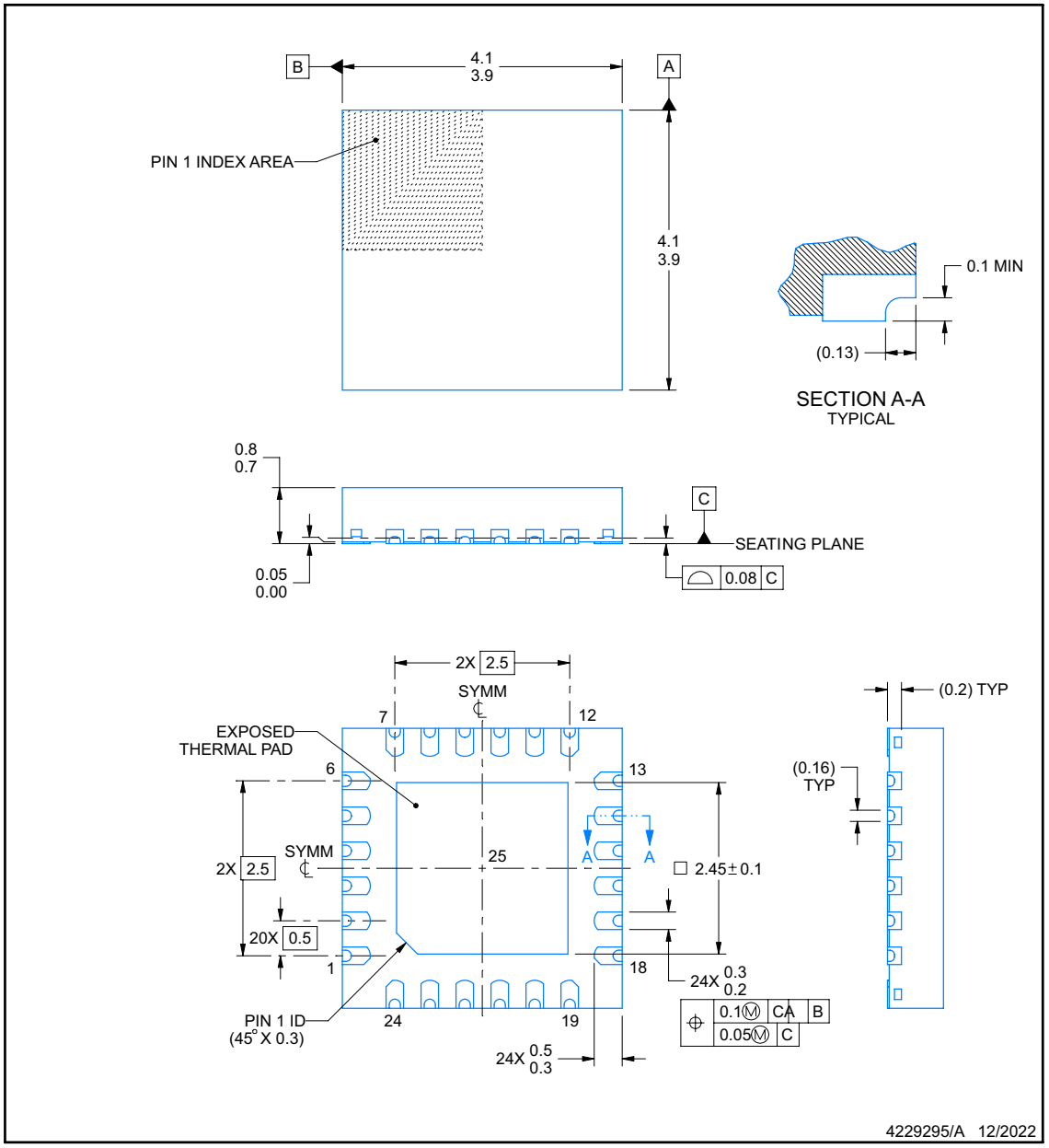

NOTES:

1. All linear dimensions are in millimeters. Any dimensions in parenthesis are for reference only. Dimensioning and tolerancing per ASME Y14.5M.
2. This drawing is subject to change without notice.
3. The package thermal pad must be soldered to the printed circuit board for thermal and mechanical performance.

Copyright © 2024 Texas Instruments Incorporated

EXAMPLE BOARD LAYOUT

RTW0024N

WQFN - 0.8 mm max height

PLASTIC QUAD FLATPACK - NO LEAD

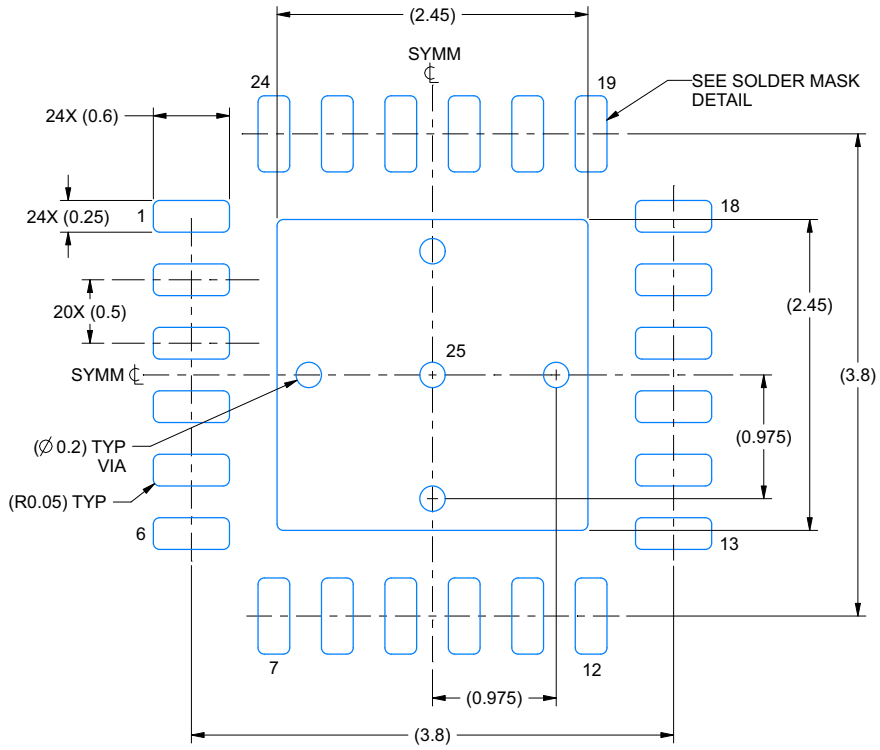

LAND PATTERN EXAMPLE
EXPOSED METAL SHOWN
SCALE: 20X

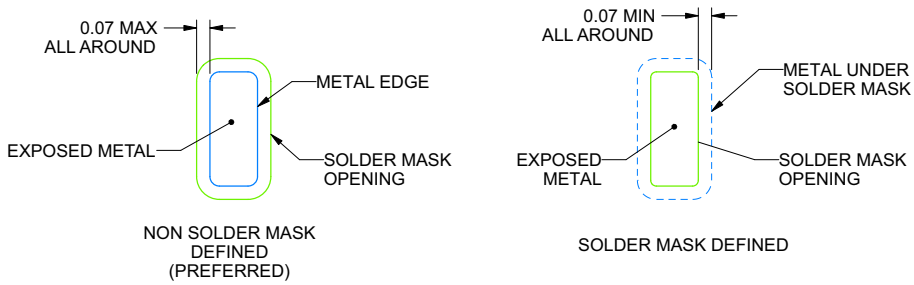

SOLDER MASK DETAILS

4229295/A 12/2022

NOTES: (continued)

4. This package is designed to be soldered to a thermal pad on the board. For more information, see Texas Instruments literature number SLUA271 (www.ti.com/lit/slua271).
5. Vias are optional depending on application, refer to device data sheet. If any vias are implemented, refer to their locations shown on this view. It is recommended that vias under paste be filled, plugged or tented.

Copyright © 2024 Texas Instruments Incorporated

EXAMPLE STENCIL DESIGN

RTW0024N

WQFN - 0.8 mm max height

PLASTIC QUAD FLATPACK - NO LEAD

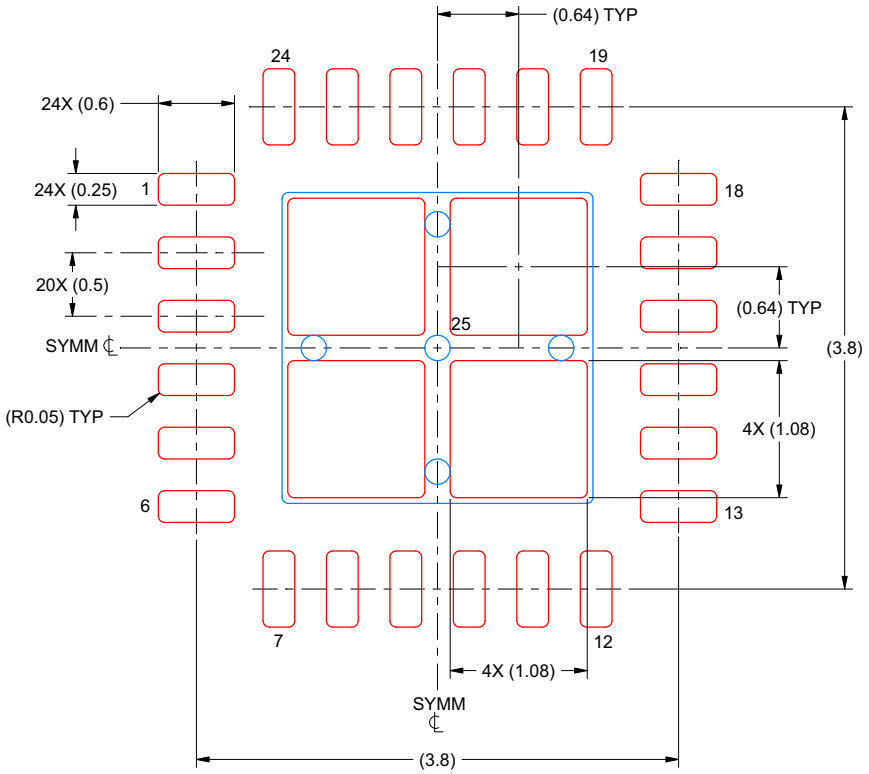

SOLDER PASTE EXAMPLE
BASED ON 0.125 MM THICK STENCIL
SCALE: 20X

EXPOSED PAD 25
78% PRINTED SOLDER COVERAGE BY AREA UNDER PACKAGE

4229295/A 12/2022

NOTES: (continued)

6. Laser cutting apertures with trapezoidal walls and rounded corners may offer better paste release. IPC-7525 may have alternate design recommendations.

Copyright © 2024 Texas Instruments Incorporated

PACKAGING INFORMATION

Orderable part number	Status (1)	Material type (2)	Package | Pins	Package qty | Carrier	RoHS (3)	Lead finish/ Ball material (4)	MSL rating/ Peak reflow (5)	Op temp (°C)	Part marking (6)
TLC69602QPWPRQ1	Active	Production	HTSSOP (PWP) | 28	2000 | LARGE T&R	Yes	NIPDAU	Level-3-260C-168 HR	-40 to 125	69602Q
TLC69602QPWPRQ1.A	Active	Production	HTSSOP (PWP) | 28	2000 | LARGE T&R	Yes	NIPDAU	Level-3-260C-168 HR	-40 to 125	69602Q
TLC69602QRTWRQ1	Active	Production	WQFN (RTW) | 24	3000 | LARGE T&R	Yes	NIPDAU	Level-1-260C-UNLIM	-40 to 125	69602Q
TLC69602QRTWRQ1.A	Active	Production	WQFN (RTW) | 24	3000 | LARGE T&R	Yes	NIPDAU	Level-1-260C-UNLIM	-40 to 125	69602Q
TLC69604QPWPRQ1	Active	Production	HTSSOP (PWP) | 28	2000 | LARGE T&R	Yes	NIPDAU	Level-3-260C-168 HR	-40 to 125	69604Q
TLC69604QPWPRQ1.A	Active	Production	HTSSOP (PWP) | 28	2000 | LARGE T&R	Yes	NIPDAU	Level-3-260C-168 HR	-40 to 125	69604Q
TLC69604QRTWRQ1	Active	Production	WQFN (RTW) | 24	3000 | LARGE T&R	Yes	NIPDAU	Level-1-260C-UNLIM	-40 to 125	69604Q
TLC69604QRTWRQ1.A	Active	Production	WQFN (RTW) | 24	3000 | LARGE T&R	Yes	NIPDAU	Level-1-260C-UNLIM	-40 to 125	69604Q
TLC69608QPWPRQ1	Active	Production	HTSSOP (PWP) | 28	2000 | LARGE T&R	Yes	NIPDAU	Level-3-260C-168 HR	-40 to 125	69608Q
TLC69608QPWPRQ1.A	Active	Production	HTSSOP (PWP) | 28	2000 | LARGE T&R	Yes	NIPDAU	Level-3-260C-168 HR	-40 to 125	69608Q
TLC69608QRTWRQ1	Active	Production	WQFN (RTW) | 24	3000 | LARGE T&R	Yes	NIPDAU	Level-1-260C-UNLIM	-40 to 125	69608Q
TLC69608QRTWRQ1.A	Active	Production	WQFN (RTW) | 24	3000 | LARGE T&R	Yes	NIPDAU	Level-1-260C-UNLIM	-40 to 125	69608Q
TLC69612QPWPRQ1	Active	Production	HTSSOP (PWP) | 28	2000 | LARGE T&R	Yes	NIPDAU	Level-3-260C-168 HR	-40 to 125	69612Q
TLC69612QPWPRQ1.A	Active	Production	HTSSOP (PWP) | 28	2000 | LARGE T&R	Yes	NIPDAU	Level-3-260C-168 HR	-40 to 125	69612Q
TLC69612QRTWRQ1	Active	Production	WQFN (RTW) | 24	3000 | LARGE T&R	Yes	NIPDAU	Level-1-260C-UNLIM	-40 to 125	69612Q
TLC69612QRTWRQ1.A	Active	Production	WQFN (RTW) | 24	3000 | LARGE T&R	Yes	NIPDAU	Level-1-260C-UNLIM	-40 to 125	69612Q
TLC69614QPWPRQ1	Active	Production	HTSSOP (PWP) | 28	2000 | LARGE T&R	Yes	NIPDAU	Level-3-260C-168 HR	-40 to 125	69614Q
TLC69614QPWPRQ1.A	Active	Production	HTSSOP (PWP) | 28	2000 | LARGE T&R	Yes	NIPDAU	Level-3-260C-168 HR	-40 to 125	69614Q
TLC69614QRTWRQ1	Active	Production	WQFN (RTW) | 24	3000 | LARGE T&R	Yes	NIPDAU	Level-1-260C-UNLIM	-40 to 125	69614Q
TLC69614QRTWRQ1.A	Active	Production	WQFN (RTW) | 24	3000 | LARGE T&R	Yes	NIPDAU	Level-1-260C-UNLIM	-40 to 125	69614Q
TLC69618QPWPRQ1	Active	Production	HTSSOP (PWP) | 28	2000 | LARGE T&R	Yes	NIPDAU	Level-3-260C-168 HR	-40 to 125	69618Q
TLC69618QPWPRQ1.A	Active	Production	HTSSOP (PWP) | 28	2000 | LARGE T&R	Yes	NIPDAU	Level-3-260C-168 HR	-40 to 125	69618Q
TLC69618QRTWRQ1	Active	Production	WQFN (RTW) | 24	3000 | LARGE T&R	Yes	NIPDAU	Level-1-260C-UNLIM	-40 to 125	69618Q
TLC69618QRTWRQ1.A	Active	Production	WQFN (RTW) | 24	3000 | LARGE T&R	Yes	NIPDAU	Level-1-260C-UNLIM	-40 to 125	69618Q
TLC69652QPWPRQ1	Active	Production	HTSSOP (PWP) | 28	2000 | LARGE T&R	Yes	NIPDAU	Level-3-260C-168 HR	-40 to 125	69652Q
TLC69652QPWPRQ1.A	Active	Production	HTSSOP (PWP) | 28	2000 | LARGE T&R	Yes	NIPDAU	Level-3-260C-168 HR	-40 to 125	69652Q
TLC69652QRTWRQ1	Active	Production	WQFN (RTW) | 24	3000 | LARGE T&R	Yes	NIPDAU	Level-1-260C-UNLIM	-40 to 125	69652Q
TLC69652QRTWRQ1.A	Active	Production	WQFN (RTW) | 24	3000 | LARGE T&R	Yes	NIPDAU	Level-1-260C-UNLIM	-40 to 125	69652Q
TLC69654QPWPRQ1	Active	Production	HTSSOP (PWP) | 28	2000 | LARGE T&R	Yes	NIPDAU	Level-3-260C-168 HR	-40 to 125	69654Q

Orderable part number	Status (1)	Material type (2)	Package | Pins	Package qty | Carrier	RoHS (3)	Lead finish/ Ball material (4)	MSL rating/ Peak reflow (5)	Op temp (°C)	Part marking (6)
TLC69654QPWPRQ1.A	Active	Production	HTSSOP (PWP) | 28	2000 | LARGE T&R	Yes	NIPDAU	Level-3-260C-168 HR	-40 to 125	69654Q
TLC69654QRTWRQ1	Active	Production	WQFN (RTW) | 24	3000 | LARGE T&R	Yes	NIPDAU	Level-1-260C-UNLIM	-40 to 125	69654Q
TLC69654QRTWRQ1.A	Active	Production	WQFN (RTW) | 24	3000 | LARGE T&R	Yes	NIPDAU	Level-1-260C-UNLIM	-40 to 125	69654Q
TLC69658QPWPRQ1	Active	Production	HTSSOP (PWP) | 28	2000 | LARGE T&R	Yes	NIPDAU	Level-3-260C-168 HR	-40 to 125	69658Q
TLC69658QPWPRQ1.A	Active	Production	HTSSOP (PWP) | 28	2000 | LARGE T&R	Yes	NIPDAU	Level-3-260C-168 HR	-40 to 125	69658Q
TLC69658QRTWRQ1	Active	Production	WQFN (RTW) | 24	3000 | LARGE T&R	Yes	NIPDAU	Level-1-260C-UNLIM	-40 to 125	69658Q
TLC69658QRTWRQ1.A	Active	Production	WQFN (RTW) | 24	3000 | LARGE T&R	Yes	NIPDAU	Level-1-260C-UNLIM	-40 to 125	69658Q
TLC69662QPWPRQ1	Active	Production	HTSSOP (PWP) | 28	2000 | LARGE T&R	Yes	NIPDAU	Level-3-260C-168 HR	-40 to 125	69662Q
TLC69662QPWPRQ1.A	Active	Production	HTSSOP (PWP) | 28	2000 | LARGE T&R	Yes	NIPDAU	Level-3-260C-168 HR	-40 to 125	69662Q
TLC69662QRTWRQ1	Active	Production	WQFN (RTW) | 24	3000 | LARGE T&R	Yes	NIPDAU	Level-1-260C-UNLIM	-40 to 125	69662Q
TLC69662QRTWRQ1.A	Active	Production	WQFN (RTW) | 24	3000 | LARGE T&R	Yes	NIPDAU	Level-1-260C-UNLIM	-40 to 125	69662Q
TLC69664QPWPRQ1	Active	Production	HTSSOP (PWP) | 28	2000 | LARGE T&R	Yes	NIPDAU	Level-3-260C-168 HR	-40 to 125	69664Q
TLC69664QPWPRQ1.A	Active	Production	HTSSOP (PWP) | 28	2000 | LARGE T&R	Yes	NIPDAU	Level-3-260C-168 HR	-40 to 125	69664Q
TLC69664QRTWRQ1	Active	Production	WQFN (RTW) | 24	3000 | LARGE T&R	Yes	NIPDAU	Level-1-260C-UNLIM	-40 to 125	69664Q
TLC69664QRTWRQ1.A	Active	Production	WQFN (RTW) | 24	3000 | LARGE T&R	Yes	NIPDAU	Level-1-260C-UNLIM	-40 to 125	69664Q
TLC69668QPWPRQ1	Active	Production	HTSSOP (PWP) | 28	2000 | LARGE T&R	Yes	NIPDAU	Level-3-260C-168 HR	-40 to 125	69668Q
TLC69668QPWPRQ1.A	Active	Production	HTSSOP (PWP) | 28	2000 | LARGE T&R	Yes	NIPDAU	Level-3-260C-168 HR	-40 to 125	69668Q
TLC69668QRTWRQ1	Active	Production	WQFN (RTW) | 24	3000 | LARGE T&R	Yes	NIPDAU	Level-1-260C-UNLIM	-40 to 125	69668Q
TLC69668QRTWRQ1.A	Active	Production	WQFN (RTW) | 24	3000 | LARGE T&R	Yes	NIPDAU	Level-1-260C-UNLIM	-40 to 125	69668Q

(1) **Status:** For more details on status, see our product life cycle.

(2) **Material type:** When designated, preproduction parts are prototypes/experimental devices, and are not yet approved or released for full production. Testing and final process, including without limitation quality assurance, reliability performance testing, and/or process qualification, may not yet be complete, and this item is subject to further changes or possible discontinuation. If available for ordering, purchases will be subject to an additional waiver at checkout, and are intended for early internal evaluation purposes only. These items are sold without warranties of any kind.

(3) **RoHS values:** Yes, No, RoHS Exempt. See the TI RoHS Statement for additional information and value definition.

(4) **Lead finish/Ball material:** Parts may have multiple material finish options. Finish options are separated by a vertical ruled line. Lead finish/Ball material values may wrap to two lines if the finish value exceeds the maximum column width.

(5) **MSL rating/Peak reflow:** The moisture sensitivity level ratings and peak solder (reflow) temperatures. In the event that a part has multiple moisture sensitivity ratings, only the lowest level per JEDEC standards is shown. Refer to the shipping label for the actual reflow temperature that will be used to mount the part to the printed circuit board.

(6) **Part marking:** There may be an additional marking, which relates to the logo, the lot trace code information, or the environmental category of the part.

Multiple part markings will be inside parentheses. Only one part marking contained in parentheses and separated by a "~" will appear on a part. If a line is indented then it is a continuation of the previous line and the two combined represent the entire part marking for that device.

Important Information and Disclaimer: The information provided on this page represents TI's knowledge and belief as of the date that it is provided. TI bases its knowledge and belief on information provided by third parties, and makes no representation or warranty as to the accuracy of such information. Efforts are underway to better integrate information from third parties. TI has taken and continues to take reasonable steps to provide representative and accurate information but may not have conducted destructive testing or chemical analysis on incoming materials and chemicals. TI and TI suppliers consider certain information to be proprietary, and thus CAS numbers and other limited information may not be available for release.

In no event shall TI's liability arising out of such information exceed the total purchase price of the TI part(s) at issue in this document sold by TI to Customer on an annual basis.

OTHER QUALIFIED VERSIONS OF TLC69602-Q1, TLC69604-Q1, TLC69608-Q1, TLC69612-Q1, TLC69614-Q1, TLC69618-Q1, TLC69652-Q1, TLC69654-Q1, TLC69658-Q1, TLC69662-Q1, TLC69664-Q1, TLC69668-Q1 :

- Catalog : TLC69602, TLC69604, TLC69608, TLC69612, TLC69614, TLC69618, TLC69652, TLC69654, TLC69658, TLC69662, TLC69664, TLC69668

NOTE: Qualified Version Definitions:

- Catalog - TI's standard catalog product

TAPE AND REEL INFORMATION

REEL DIMENSIONS

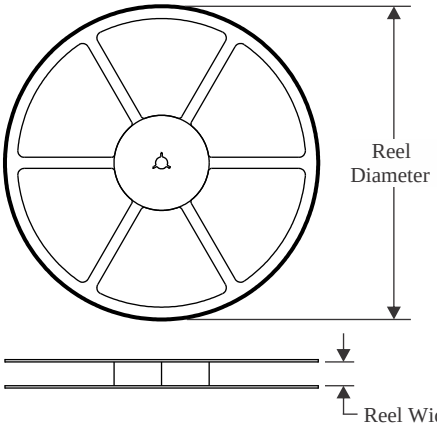

TAPE DIMENSIONS

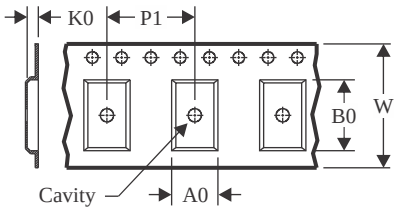

A0	Dimension designed to accommodate the component width
B0	Dimension designed to accommodate the component length
K0	Dimension designed to accommodate the component thickness
W	Overall width of the carrier tape
P1	Pitch between successive cavity centers

QUADRANT ASSIGNMENTS FOR PIN 1 ORIENTATION IN TAPE

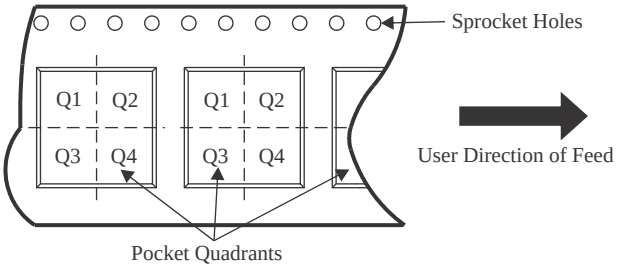

*All dimensions are nominal

Device	Package Type	Package Drawing	Pins	SPQ	Reel Diameter (mm)	Reel Width W1 (mm)	A0 (mm)	B0 (mm)	K0 (mm)	P1 (mm)	W (mm)	Pin1 Quadrant
TLC69602QPWPRQ1	HTSSOP	PWP	28	2000	330.0	16.4	6.9	10.2	1.8	12.0	16.0	Q1
TLC69602QRTWRQ1	WQFN	RTW	24	3000	330.0	12.4	4.25	4.25	1.15	8.0	12.0	Q2
TLC69604QPWPRQ1	HTSSOP	PWP	28	2000	330.0	16.4	6.9	10.2	1.8	12.0	16.0	Q1
TLC69604QRTWRQ1	WQFN	RTW	24	3000	330.0	12.4	4.25	4.25	1.15	8.0	12.0	Q2
TLC69608QPWPRQ1	HTSSOP	PWP	28	2000	330.0	16.4	6.9	10.2	1.8	12.0	16.0	Q1
TLC69608QRTWRQ1	WQFN	RTW	24	3000	330.0	12.4	4.25	4.25	1.15	8.0	12.0	Q2
TLC69612QPWPRQ1	HTSSOP	PWP	28	2000	330.0	16.4	6.9	10.2	1.8	12.0	16.0	Q1
TLC69612QRTWRQ1	WQFN	RTW	24	3000	330.0	12.4	4.25	4.25	1.15	8.0	12.0	Q2
TLC69614QPWPRQ1	HTSSOP	PWP	28	2000	330.0	16.4	6.9	10.2	1.8	12.0	16.0	Q1
TLC69614QRTWRQ1	WQFN	RTW	24	3000	330.0	12.4	4.25	4.25	1.15	8.0	12.0	Q2
TLC69618QPWPRQ1	HTSSOP	PWP	28	2000	330.0	16.4	6.9	10.2	1.8	12.0	16.0	Q1
TLC69618QRTWRQ1	WQFN	RTW	24	3000	330.0	12.4	4.25	4.25	1.15	8.0	12.0	Q2
TLC69652QPWPRQ1	HTSSOP	PWP	28	2000	330.0	16.4	6.9	10.2	1.8	12.0	16.0	Q1
TLC69652QRTWRQ1	WQFN	RTW	24	3000	330.0	12.4	4.25	4.25	1.15	8.0	12.0	Q2
TLC69654QPWPRQ1	HTSSOP	PWP	28	2000	330.0	16.4	6.9	10.2	1.8	12.0	16.0	Q1
TLC69654QRTWRQ1	WQFN	RTW	24	3000	330.0	12.4	4.25	4.25	1.15	8.0	12.0	Q2

Device	Package Type	Package Drawing	Pins	SPQ	Reel Diameter (mm)	Reel Width W1 (mm)	A0 (mm)	B0 (mm)	K0 (mm)	P1 (mm)	W (mm)	Pin1 Quadrant
TLC69658QPWPRQ1	HTSSOP	PWP	28	2000	330.0	16.4	6.9	10.2	1.8	12.0	16.0	Q1
TLC69658QRTWRQ1	WQFN	RTW	24	3000	330.0	12.4	4.25	4.25	1.15	8.0	12.0	Q2
TLC69662QPWPRQ1	HTSSOP	PWP	28	2000	330.0	16.4	6.9	10.2	1.8	12.0	16.0	Q1
TLC69662QRTWRQ1	WQFN	RTW	24	3000	330.0	12.4	4.25	4.25	1.15	8.0	12.0	Q2
TLC69664QPWPRQ1	HTSSOP	PWP	28	2000	330.0	16.4	6.9	10.2	1.8	12.0	16.0	Q1
TLC69664QRTWRQ1	WQFN	RTW	24	3000	330.0	12.4	4.25	4.25	1.15	8.0	12.0	Q2
TLC69668QPWPRQ1	HTSSOP	PWP	28	2000	330.0	16.4	6.75	10.1	1.8	12.0	16.0	Q1
TLC69668QRTWRQ1	WQFN	RTW	24	3000	330.0	12.4	4.25	4.25	1.15	8.0	12.0	Q2

TAPE AND REEL BOX DIMENSIONS

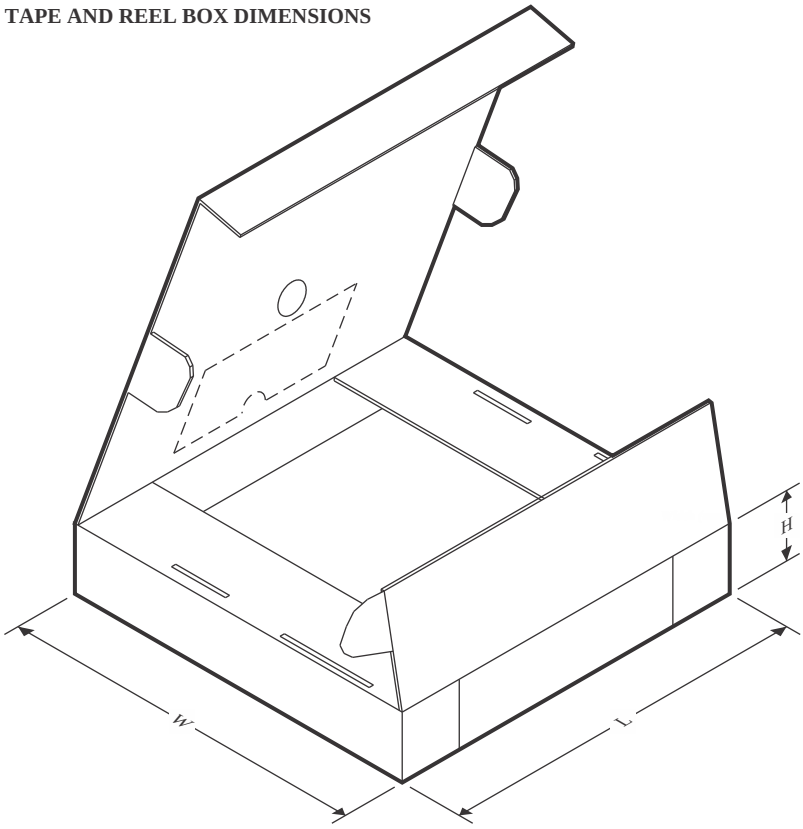

*All dimensions are nominal

Device	Package Type	Package Drawing	Pins	SPQ	Length (mm)	Width (mm)	Height (mm)
TLC69602QPWPRQ1	HTSSOP	PWP	28	2000	356.0	356.0	35.0
TLC69602QRTWRQ1	WQFN	RTW	24	3000	367.0	367.0	35.0
TLC69604QPWPRQ1	HTSSOP	PWP	28	2000	356.0	356.0	35.0
TLC69604QRTWRQ1	WQFN	RTW	24	3000	367.0	367.0	35.0
TLC69608QPWPRQ1	HTSSOP	PWP	28	2000	356.0	356.0	35.0
TLC69608QRTWRQ1	WQFN	RTW	24	3000	367.0	367.0	35.0
TLC69612QPWPRQ1	HTSSOP	PWP	28	2000	356.0	356.0	35.0
TLC69612QRTWRQ1	WQFN	RTW	24	3000	367.0	367.0	35.0
TLC69614QPWPRQ1	HTSSOP	PWP	28	2000	356.0	356.0	35.0
TLC69614QRTWRQ1	WQFN	RTW	24	3000	367.0	367.0	35.0
TLC69618QPWPRQ1	HTSSOP	PWP	28	2000	356.0	356.0	35.0
TLC69618QRTWRQ1	WQFN	RTW	24	3000	367.0	367.0	35.0
TLC69652QPWPRQ1	HTSSOP	PWP	28	2000	356.0	356.0	35.0
TLC69652QRTWRQ1	WQFN	RTW	24	3000	367.0	367.0	35.0
TLC69654QPWPRQ1	HTSSOP	PWP	28	2000	356.0	356.0	35.0
TLC69654QRTWRQ1	WQFN	RTW	24	3000	367.0	367.0	35.0
TLC69658QPWPRQ1	HTSSOP	PWP	28	2000	356.0	356.0	35.0
TLC69658QRTWRQ1	WQFN	RTW	24	3000	367.0	367.0	35.0

Device	Package Type	Package Drawing	Pins	SPQ	Length (mm)	Width (mm)	Height (mm)
TLC69662QPWPRQ1	HTSSOP	PWP	28	2000	356.0	356.0	35.0
TLC69662QRTWRQ1	WQFN	RTW	24	3000	367.0	367.0	35.0
TLC69664QPWPRQ1	HTSSOP	PWP	28	2000	356.0	356.0	35.0
TLC69664QRTWRQ1	WQFN	RTW	24	3000	367.0	367.0	35.0
TLC69668QPWPRQ1	HTSSOP	PWP	28	2000	356.0	356.0	35.0
TLC69668QRTWRQ1	WQFN	RTW	24	3000	367.0	367.0	35.0

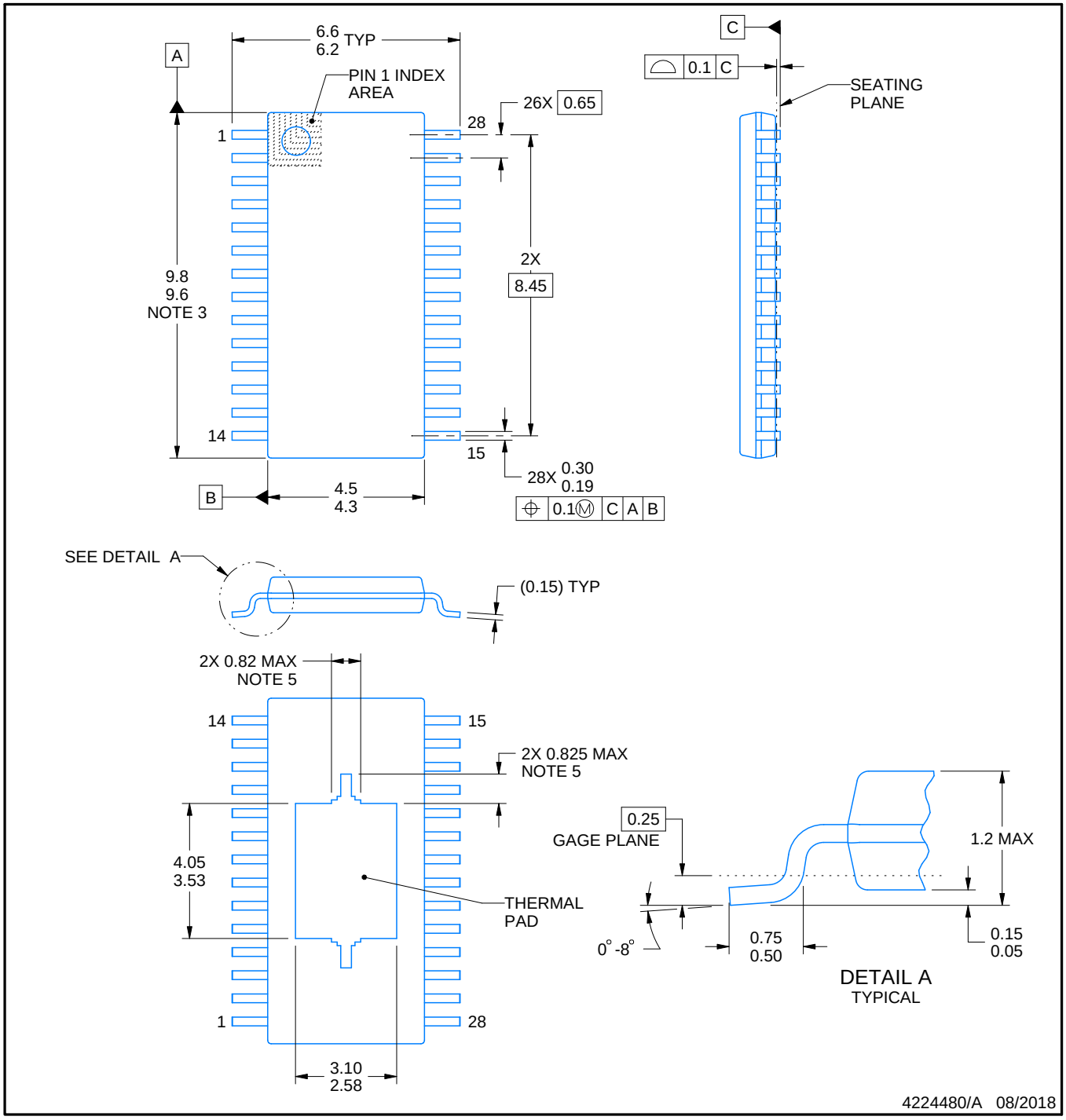

PowerPAD is a trademark of Texas Instruments.

NOTES:

1. All linear dimensions are in millimeters. Any dimensions in parenthesis are for reference only. Dimensioning and tolerancing per ASME Y14.5M.
2. This drawing is subject to change without notice.
3. This dimension does not include mold flash, protrusions, or gate burrs. Mold flash, protrusions, or gate burrs shall not exceed 0.15 mm per side.
4. Reference JEDEC registration MO-153.
5. Features may differ or may not be present.

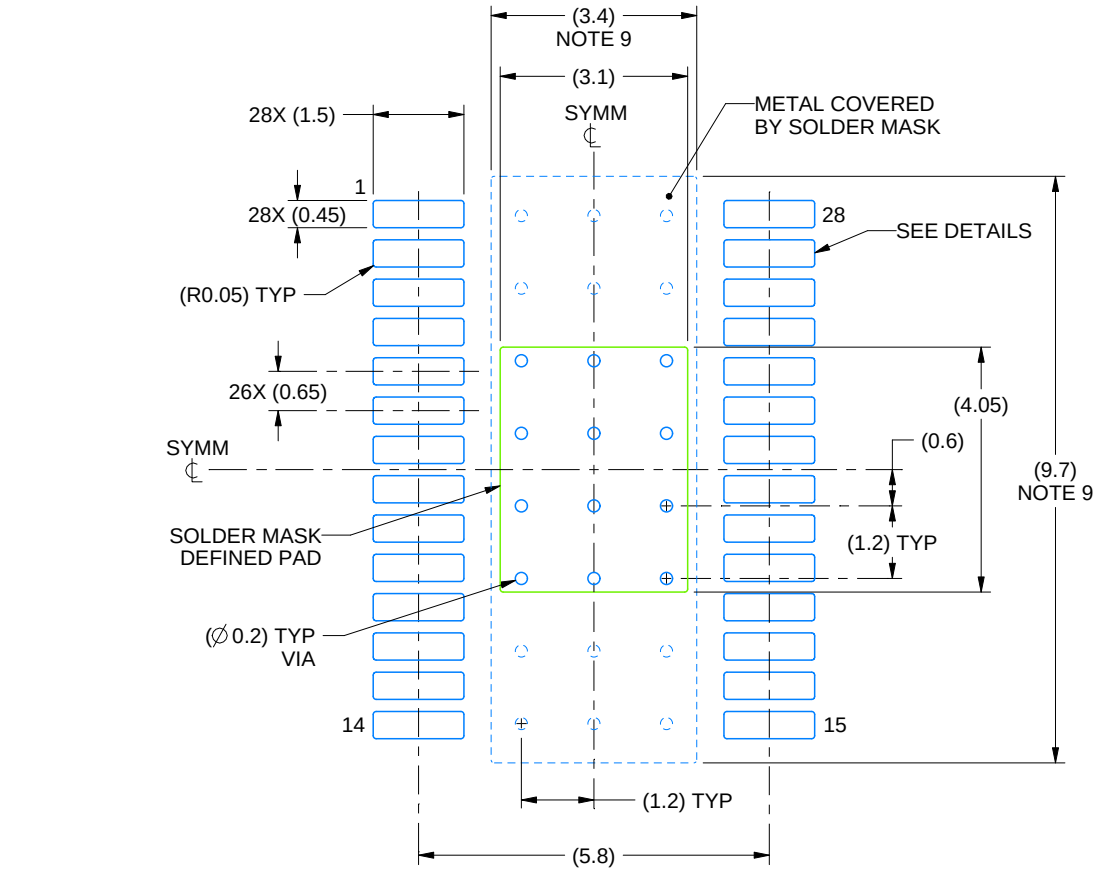

LAND PATTERN EXAMPLE
EXPOSED METAL SHOWN
SCALE: 8X

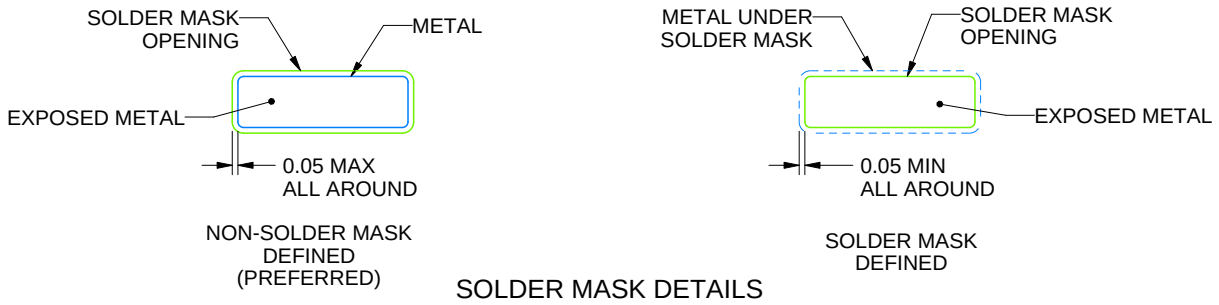

SOLDER MASK DETAILS

4224480/A 08/2018

NOTES: (continued)

6. Publication IPC-7351 may have alternate designs.
7. Solder mask tolerances between and around signal pads can vary based on board fabrication site.
8. This package is designed to be soldered to a thermal pad on the board. For more information, see Texas Instruments literature numbers SLMA002 (www.ti.com/lit/slma002) and SLMA004 (www.ti.com/lit/slma004).
9. Size of metal pad may vary due to creepage requirement.
10. Vias are optional depending on application, refer to device data sheet. It is recommended that vias under paste be filled, plugged or tented.

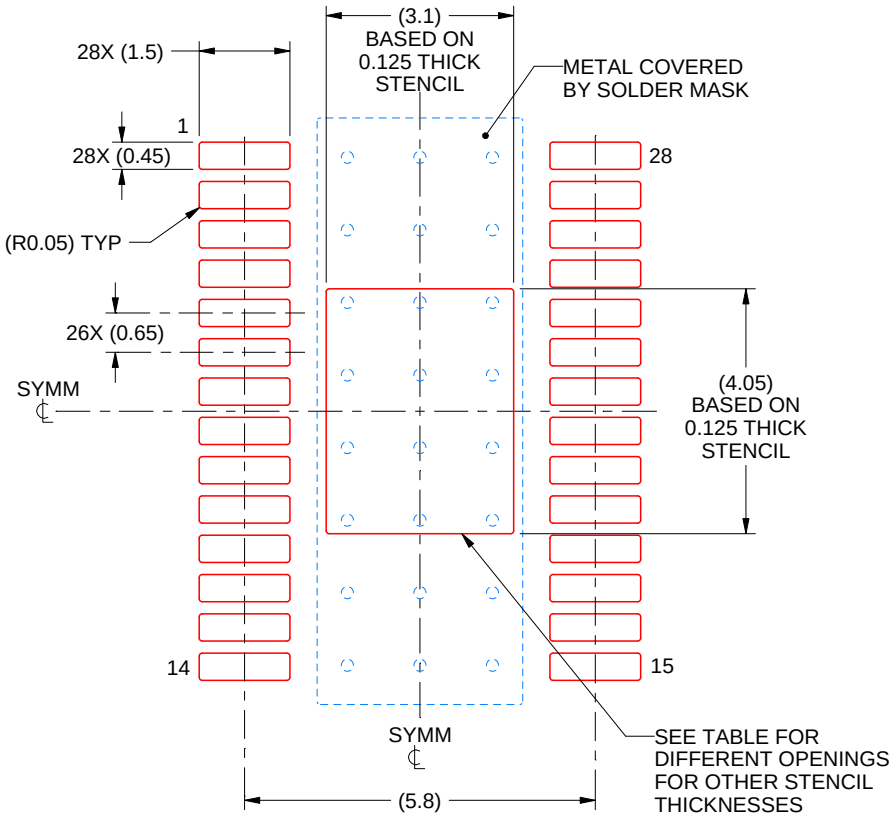

SOLDER PASTE EXAMPLE
BASED ON 0.125 mm THICK STENCIL
SCALE: 8X

STENCIL THICKNESS	SOLDER STENCIL OPENING
0.1	3.47 X 4.53
0.125	3.10 X 4.05 (SHOWN)
0.15	2.83 X 3.70
0.175	2.62 X 3.42

4224480/A 08/2018

NOTES: (continued)

11. Laser cutting apertures with trapezoidal walls and rounded corners may offer better paste release. IPC-7525 may have alternate design recommendations.
12. Board assembly site may have different recommendations for stencil design.

PACKAGE OUTLINE

RTW0024N

WQFN - 0.8 mm max height

PLASTIC QUAD FLATPACK - NO LEAD

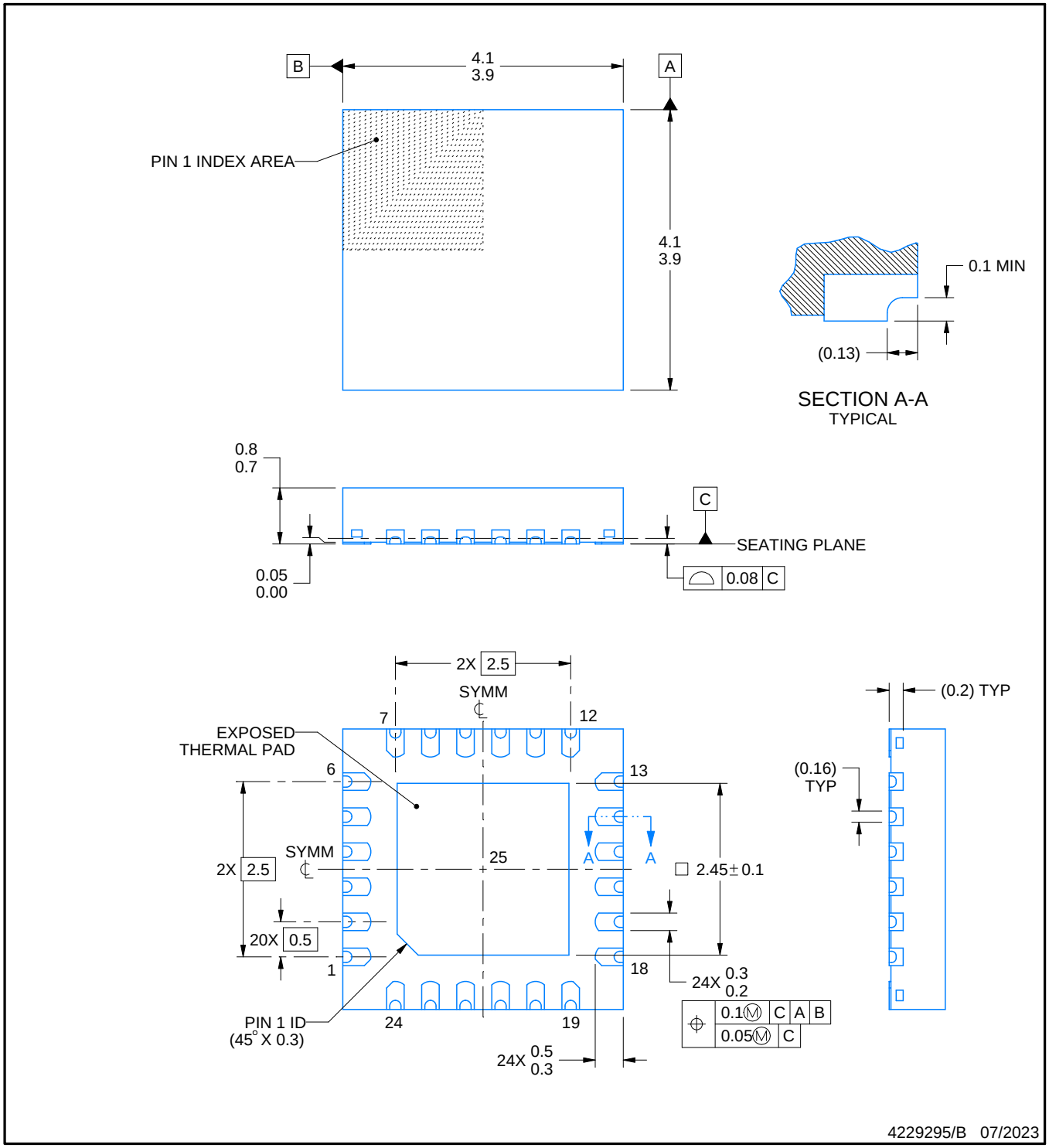

NOTES:

1. All linear dimensions are in millimeters. Any dimensions in parenthesis are for reference only. Dimensioning and tolerancing per ASME Y14.5M.
2. This drawing is subject to change without notice.
3. The package thermal pad must be soldered to the printed circuit board for thermal and mechanical performance.
4. Reference JEDEC registration MO-220. For wetable flank, reference IPC document IPC-7093.

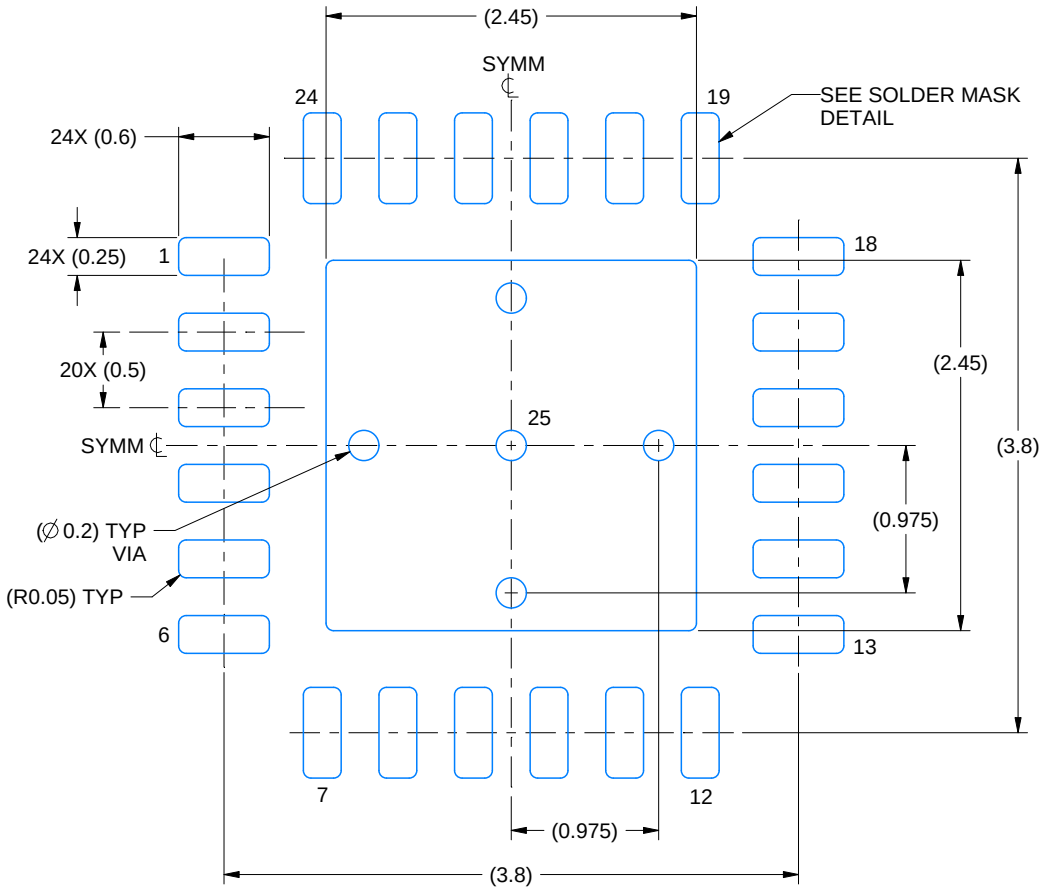

LAND PATTERN EXAMPLE
EXPOSED METAL SHOWN
SCALE: 20X

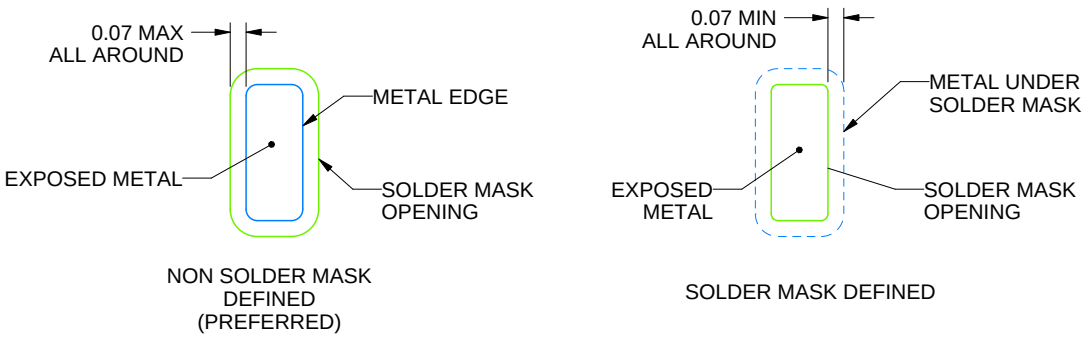

SOLDER MASK DETAILS

4229295/B 07/2023

NOTES: (continued)

5. This package is designed to be soldered to a thermal pad on the board. For more information, see Texas Instruments literature number SLUA271 (www.ti.com/lit/slua271).
6. Vias are optional depending on application, refer to device data sheet. If any vias are implemented, refer to their locations shown on this view. It is recommended that vias under paste be filled, plugged or tented.

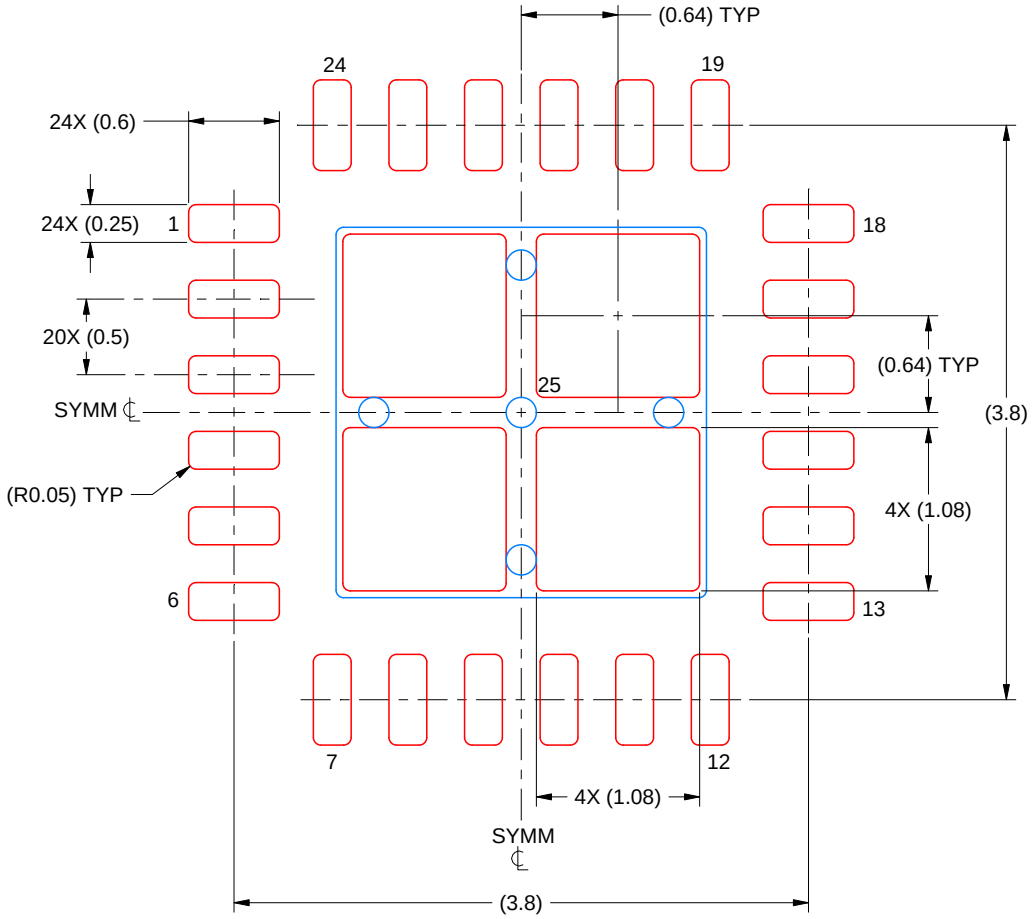

SOLDER PASTE EXAMPLE
BASED ON 0.125 MM THICK STENCIL
SCALE: 20X

EXPOSED PAD 25
78% PRINTED SOLDER COVERAGE BY AREA UNDER PACKAGE

4229295/B 07/2023

NOTES: (continued)

7. Laser cutting apertures with trapezoidal walls and rounded corners may offer better paste release. IPC-7525 may have alternate design recommendations.

IMPORTANT NOTICE AND DISCLAIMER

TI PROVIDES TECHNICAL AND RELIABILITY DATA (INCLUDING DATA SHEETS), DESIGN RESOURCES (INCLUDING REFERENCE DESIGNS), APPLICATION OR OTHER DESIGN ADVICE, WEB TOOLS, SAFETY INFORMATION, AND OTHER RESOURCES “AS IS” AND WITH ALL FAULTS, AND DISCLAIMS ALL WARRANTIES, EXPRESS AND IMPLIED, INCLUDING WITHOUT LIMITATION ANY IMPLIED WARRANTIES OF MERCHANTABILITY, FITNESS FOR A PARTICULAR PURPOSE OR NON-INFRINGEMENT OF THIRD PARTY INTELLECTUAL PROPERTY RIGHTS.

These resources are intended for skilled developers designing with TI products. You are solely responsible for (1) selecting the appropriate TI products for your application, (2) designing, validating and testing your application, and (3) ensuring your application meets applicable standards, and any other safety, security, regulatory or other requirements.

These resources are subject to change without notice. TI grants you permission to use these resources only for development of an application that uses the TI products described in the resource. Other reproduction and display of these resources is prohibited. No license is granted to any other TI intellectual property right or to any third party intellectual property right. TI disclaims responsibility for, and you will fully indemnify TI and its representatives against, any claims, damages, costs, losses, and liabilities arising out of your use of these resources.

TI’s products are provided subject to TI’s Terms of Sale or other applicable terms available either on ti.com or provided in conjunction with such TI products. TI’s provision of these resources does not expand or otherwise alter TI’s applicable warranties or warranty disclaimers for TI products.

TI objects to and rejects any additional or different terms you may have proposed.

Mailing Address: Texas Instruments, Post Office Box 655303, Dallas, Texas 75265
Copyright © 2025, Texas Instruments Incorporated