# UCC21750 10-A Source/Sink Reinforced Isolated Single Channel Gate Driver for SiC/IGBT with Active Protection, Isolated Analog Sensing and High-CMTI

## 1 Features

- 5.7-$kV_{RMS}$ single channel isolated gate driver
- SiC MOSFETs and IGBTs up to 2121$V_{pk}$
- 33-V maximum output drive voltage (VDD – VEE)
- ±10-A drive strength and split output
- 150-V/ns minimum CMTI
- 200-ns response time fast DESAT protection
- 4-A Internal active miller clamp
- 400-mA soft turn-off when fault happens
- Isolated analog sensor with PWM output for
  - Temperature sensing with NTC, PTC or thermal diode
  - High voltage DC-link or phase voltage
- Alarm $\overline{FLT}$ on overcurrent and reset from $\overline{RST}$/EN
- Fast enable and disable response on $\overline{RST}$/EN
- Reject < 40-ns noise transient and pulse on input pins
- 12-V VDD UVLO with power good on RDY
- Inputs/outputs with over/under-shoot transient voltage immunity up to 5 V
- 130-ns (maximum) propagation delay and 30-ns (maximum) pulse/part skew
- SOIC-16 DW package with creepage and clearance distance > 8 mm
- Operating junction temperature –40°C to 150°C
- Safety-related certifications:
  - Reinforced insulation per DIN EN IEC 60747-17 (VDE 0884-17)
  - UL 1577 component recognition program

## 2 Applications

- Industrial motor drives
- Server, telecom, and industrial power supplies
- Uninterruptible power supplies (UPS)
- Solar inverters

## 3 Description

The UCC21750 is a galvanic isolated single channel gate driver designed for SiC MOSFETs and IGBTs up to 2121-V DC operating voltage with advanced protection features, best-in-class dynamic performance and robustness. The UCC21750 has up to ±10-A peak source and sink current.

The input side is isolated from the output side with $SiO_2$ capacitive isolation technology, supporting up to 1.5-$kV_{RMS}$ working voltage, 12.8-$kV_{PK}$ surge immunity with longer than 40 years Isolation barrier life, as well as providing low part-to-part skew, and > 150-V/ns common mode noise immunity (CMTI).

The UCC21750 includes the state-of-art protection features, such as fast overcurrent and short circuit detection, shunt current sensing support, fault reporting, active miller clamp, and input and output side power supply UVLO to optimize SiC and IGBT switching behavior and robustness. The isolated analog to PWM sensor can be used for easier temperature or voltage sensing, further increasing the drivers' versatility and simplifying the system design effort, size, and cost.

**Device Information**

| PART NUMBER | PACKAGE(1) | BODY SIZE (NOM) |
|---|---|---|
| UCC21750 | DW SOIC-16 | 10.3 mm × 7.5 mm |

(1) For all available packages, see the orderable addendum at the end of the data sheet.

**Device Pin Configuration**

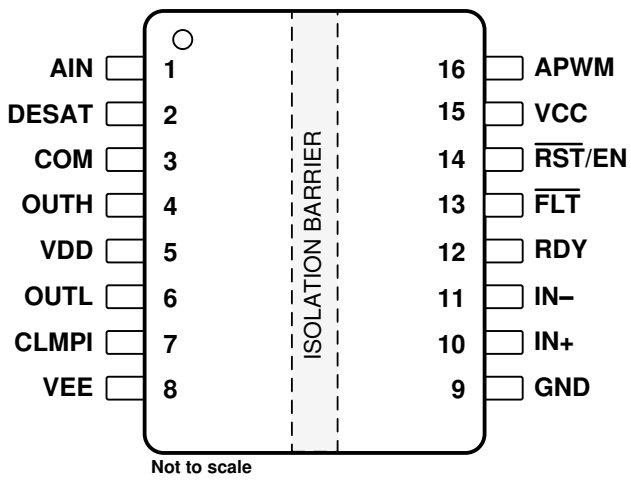


An IMPORTANT NOTICE at the end of this data sheet addresses availability, warranty, changes, use in safety-critical applications, intellectual property matters and other important disclaimers. PRODUCTION DATA.

## Table of Contents

**1 Features**....1
**2 Applications**....1
**3 Description**....1
**4 Revision History**....2
**5 Pin Configuration and Functions**....3
**6 Specifications**....4
6.1 Absolute Maximum Ratings....4
6.2 ESD Ratings....4
6.3 Recommended Operating Conditions....4
6.4 Thermal Information....5
6.5 Power Ratings....5
6.6 Insulation Specifications....5
6.7 Safety Limiting Values....6
6.8 Electrical Characteristics....6
6.9 Safety-Related Certifications....8
6.10 Switching Characteristics....9
6.11 Insulation Characteristics Curves....10
6.12 Typical Characteristics....11
**7 Parameter Measurement Information**....16
7.1 Propagation Delay....16
7.2 Input Deglitch Filter....17
7.3 Active Miller Clamp....18
7.4 Undervoltage Lockout (UVLO)....19
7.5 Desaturation (DESAT) Protection....21
**8 Detailed Description**....23
8.1 Overview....23
8.2 Functional Block Diagram....24
8.3 Feature Description....24
8.4 Device Functional Modes....30
**9 Applications and Implementation**....31
9.1 Application Information....31
9.2 Typical Application....31
**10 Power Supply Recommendations**....43
**11 Layout**....44
11.1 Layout Guidelines....44
11.2 Layout Example....45
**12 Device and Documentation Support**....46
12.1 Device Support....46
12.2 Documentation Support....46
12.3 Receiving Notification of Documentation Updates....46
12.4 Support Resources....46
12.5 Trademarks....46
12.6 Electrostatic Discharge Caution....46
12.7 Glossary....46
**13 Mechanical, Packaging, and Orderable Information**....46

## 4 Revision History

NOTE: Page numbers for previous revisions may differ from page numbers in the current version.

| Changes from Revision B (December 2019) to Revision C (January 2023) | Page |
|---|---|
| • Added Safety-related certifications to Features | 1 |
| • Added what to do with unused pins to pin functions table | 3 |
| • Changed recommended value of decoupling capacitors. | 3 |
| • Added recommended decoupling capacitor layout placement. | 3 |
| • Changed test conditions per DIN EN IEC 60747-17 (VDE 0884-17) | 5 |
| • Changed Ichg lower limit to 430uA | 6 |
| • Changed VAin lower limit to 0.6V | 6 |
| • Changed direction of $I_{CLMPI}$ in $V_{CLP-CLMPI}$ test condition | 6 |
| • Added test condition for soft turn-off current | 6 |
| • Deleted short circuit clamping max condition | 6 |
| • Deleted $V_{DESATL}$ | 6 |
| • Changed from 150ns to 120ns | 6 |
| • Changed from 150ns to 148ns | 6 |
| • Deleted 9600 V from Value column in the $V_{IOTM}$ row | 6 |
| • Changed VDE and UL to certified | 8 |
| • Changed DESAT figure | 28 |
| • Changed DESAT soft turn-off figure | 28 |
| • Added function state showing gate driver turning on. Changed RDY condition when VCC is PD. | 30 |
| • Added Section 9.2.3 | 42 |

| Changes from Revision A (May 2019) to Revision B (December 2019) | Page |
|---|---|
| • Changed marketing status from Advance Information to production data | 1 |
| • Deleted test voltage, 9600V, from value column | 5 |


Copyright © 2023 Texas Instruments Incorporated

## 5 Pin Configuration and Functions

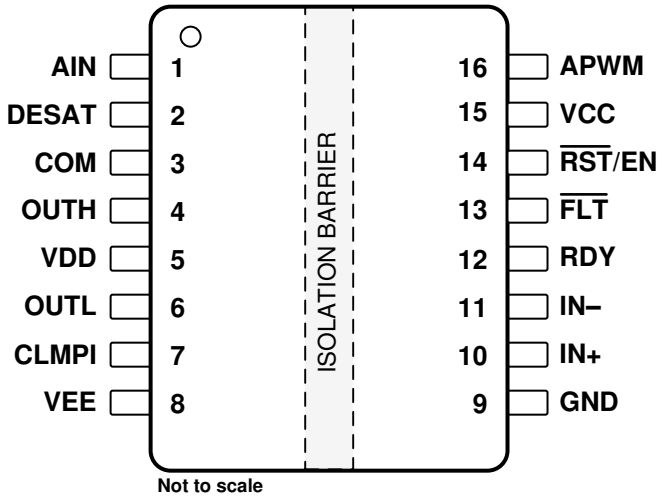


**Figure 5-1. UCC21750 DW SOIC (16) Top View**

**Table 5-1. Pin Functions**

| PIN | | I/O[(1)] | DESCRIPTION |
|---|---|---|---|
| NAME | NO. | | |
| AIN | 1 | I | Isolated analog sensing input, parallel a small capacitor to COM for better noise immunity. Tie to COM if unused. |
| DESAT | 2 | I | Desaturation current protection input. Tie to COM if unused. |
| COM | 3 | P | Common ground reference, connecting to emitter pin for IGBT and source pin for SiC-MOSFET. |
| OUTH | 4 | O | Gate driver output pullup |
| VDD | 5 | P | Positive supply rail for gate drive voltage. Bypass with a >10-µF capacitor to COM to support specified gate driver source peak current capability. Place decoupling capacitor close to the pin. |
| OUTL | 6 | O | Gate driver output pull down |
| CLMPI | 7 | I | Internal active miller clamp, connecting this pin directly to the gate of the power transistor. Leave floating or tie to VEE if unused. |
| VEE | 8 | P | Negative supply rail for gate drive voltage. Bypass with a >10-µF capacitor to COM to support specified gate driver sink peak current capability. Place decoupling capacitor close to the pin. |
| GND | 9 | P | Input power supply and logic ground reference. |
| IN+ | 10 | I | Non-inverting gate driver control input. Tie to VCC if unused. |
| IN– | 11 | I | Inverting gate driver control input. Tie to GND if unused. |
| RDY | 12 | O | Power good for VCC-GND and VDD-COM. RDY is open drain configuration and can be paralleled with other RDY signals. |
| $\overline{\text{FLT}}$ | 13 | O | Active low fault alarm output upon over current or short circuit. $\overline{\text{FLT}}$ is in open drain configuration and can be paralleled with other faults. |
| $\overline{\text{RST}}$/EN | 14 | I | The $\overline{\text{RST}}$/EN serves two purposes:<br>1) Enable / shutdown of the output side. The FET is turned off by a regular turn-off, if terminal EN is set to low;<br>2) Resets the DESAT condition signaled on $\overline{\text{FLT}}$ pin. if terminal $\overline{\text{RST}}$/EN is set to low for more than 1000ns. A reset of signal $\overline{\text{FLT}}$ is asserted at the rising edge of terminal $\overline{\text{RST}}$/EN.<br>For automatic RESET function, this pin only serves as an EN pin. Enable / shutdown of the output side. The FET is turned off by a regular turn-off, if terminal EN is set to low. |
| VCC | 15 | P | Input power supply from 3 V to 5.5 V. Bypass with a >1-µF capacitor to GND. Place decoupling capacitor close to the pin. |
| APWM | 16 | O | Isolated analog sensing PWM output. Leave floating if unused. |

(1) P = Power, G = Ground, I = Input, O = Output

# 6 Specifications

## 6.1 Absolute Maximum Ratings

over operating free-air temperature range (unless otherwise noted)[1]

| PARAMETER | | | MIN | MAX | UNIT |
|---|---|---|---|---|---|
| VCC | VCC – GND | | –0.3 | 6 | V |
| VDD | VDD – COM | | –0.3 | 36 | V |
| VEE | VEE – COM | | –17.5 | 0.3 | V |
| $V_{MAX}$ | VDD – VEE | | –0.3 | 36 | V |
| IN+, IN–, $\overline{RST}$/EN | | DC | GND–0.3 | VCC | V |
| | | Transient, less than 100 ns[2] | GND–5.0 | VCC+5.0 | V |
| DESAT | Reference to COM | | COM–0.3 | VDD+0.3 | V |
| AIN | Reference to COM | | –0.3 | 5 | V |
| OUTH, OUTL , CLMPI | | DC | VEE–0.3 | VDD | V |
| | | Transient, less than 100 ns[2] | VEE–5.0 | VDD+5.0 | V |
| RDY, $\overline{FLT}$, APWM | | | GND–0.3 | VCC | V |
| $I_{\overline{FLT}}$, $I_{RDY}$ | $\overline{FLT}$, and RDY pin input current | | | 20 | mA |
| $I_{APWM}$ | APWM pin output current | | | 20 | mA |
| $T_J$ | Junction temperature range | | –40 | 150 | °C |
| $T_{stg}$ | Storage temperature range | | –65 | 150 | °C |

(1) Operation outside the *Absolute Maximum Ratings* may cause permanent device damage. *Absolute Maximum Ratings* do not imply functional operation of the device at these or any other conditions beyond those listed under *Recommended Operating Conditions*. If outside the *Recommended Operating Conditions* but within the *Absolute Maximum Ratings*, the device may not be fully functional, and this may affect device reliability, functionality, performance, and shorten the device lifetime.
(2) Values are verified by characterization on bench.

## 6.2 ESD Ratings

| | | | VALUE | UNIT |
|---|---|---|---|---|
| $V_{(ESD)}$ | Electrostatic discharge | Human-body model (HBM), per AEC Q100-002[1] | ±4000 | V |
| | | Charged-device model (CDM), per AEC Q100-011 | ±1500 | |

(1) AEC Q100-002 indicates that HBM stressing shall be in accordance with the ANSI/ESDA/JEDEC JS-001 specification.

## 6.3 Recommended Operating Conditions

| PARAMETER | | | MIN | MAX | UNIT |
|---|---|---|---|---|---|
| VCC | VCC–GND | | 3.0 | 5.5 | V |
| VDD | VDD–COM | | 13 | 33 | V |
| $V_{MAX}$ | VDD–VEE | | – | 33 | V |
| IN+, IN–, $\overline{RST}$/EN | Reference to GND | High level input voltage | 0.7×VCC | VCC | V |
| | | Low level input voltage | 0 | 0.3×VCC | |
| AIN | Reference to COM | | 0.6 | 4.5 | V |
| $t_{RST/EN}$ | Minimum pulse width that reset the fault | | 1000 | | ns |
| $T_A$ | Ambient temperature | | –40 | 125 | °C |
| $T_J$ | Junction temperature | | –40 | 150 | °C |


Copyright © 2023 Texas Instruments Incorporated

## 6.4 Thermal Information

| THERMAL METRIC[1] | | UCC21750 DW (SOIC) 16 PINS | UNIT |
|---|---|---|---|
| $R_{\theta JA}$ | Junction-to-ambient thermal resistance | 68.3 | °C/W |
| $R_{\theta JC(top)}$ | Junction-to-case (top) thermal resistance | 27.5 | °C/W |
| $R_{\theta JB}$ | Junction-to-board thermal resistance | 32.9 | °C/W |
| $\psi_{JT}$ | Junction-to-top characterization parameter | 14.1 | °C/W |
| $\psi_{JB}$ | Junction-to-board characterization parameter | 32.3 | °C/W |

(1) For more information about traditional and new thermal metrics, see the *Semiconductor and IC Package Thermal Metrics* application report.

## 6.5 Power Ratings

| PARAMETER | | TEST CONDITIONS | Value | UNIT |
|---|---|---|---|---|
| $P_D$ | Maximum power dissipation (both sides) | VCC = 5 V, VDD–COM = 20 V, COM–VEE = 5 V, IN+/– = 5 V, 150 kHz, 50% Duty Cycle for a 10-nF load, $T_a$ = 25ºC | 985 | mW |
| $P_{D1}$ | Maximum power dissipation by transmitter side | | 20 | mW |
| $P_{D2}$ | Maximum power dissipation by receiver side | | 965 | mW |

## 6.6 Insulation Specifications

| PARAMETER | | TEST CONDITIONS | VALUE | UNIT |
|---|---|---|---|---|
| **GENERAL** | | | | |
| CLR | External clearance[1] | Shortest terminal-to-terminal distance through air | > 8 | mm |
| CPG | External creepage[1] | Shortest terminal-to-terminal distance across the package surface | > 8 | mm |
| DTI | Distance through the insulation | Minimum internal gap (Internal clearance) of the double insulation (2 × 0.0085 mm) | > 17 | µm |
| CTI | Comparative tracking index | DIN EN 60112 (VDE 0303-11); IEC 60112 | > 600 | V |
| | Material group | According to IEC 60664–1 | I | |
| | Overvoltage Category per IEC 60664–1 | Rated mains voltage ≤ 300 $V_{RMS}$ | I-IV | |
| | | Rated mains voltage ≤ 600 $V_{RMS}$ | I-IV | |
| | | Rated mains voltage ≤ 1000 $V_{RMS}$ | I-III | |
| **DIN EN IEC 60747-17 (VDE 0884-17)[2]** | | | | |
| $V_{IORM}$ | Maximum repetitive peak isolation voltage | AC voltage (bipolar) | 2121 | $V_{PK}$ |
| $V_{IOWM}$ | Maximum isolation working voltage | AC voltage (sine wave) Time dependent dielectric breakdown (TDDB) test | 1500 | $V_{RMS}$ |
| | | DC voltage | 2121 | $V_{DC}$ |
| $V_{IMP}$ | Maximum impulse voltage | Tested in air, 1.2/50-µs waveform per IEC 62368-1 | 8000 | $V_{PK}$ |
| $V_{IOTM}$ | Maximum transient isolation voltage | $V_{TEST}$=$V_{IOTM}$, t = 60 s (qualification test) | 8000 | $V_{PK}$ |
| | | $V_{TEST}$=1.2 x $V_{IOTM}$, t = 1 s (100% production test) | | |
| $V_{IOSM}$ | Maximum surge isolation voltage[3] | Test method per IEC 62368-1, 1.2/50 µs waveform | 12800 | $V_{PK}$ |

## 6.6 Insulation Specifications (continued)

| PARAMETER | | TEST CONDITIONS | VALUE | UNIT |
|---|---|---|---|---|
| $q_{pd}$ | Apparent charge[4] | Method a: After I/O safety test subgroup 2/3, $V_{ini}$ = $V_{IOTM}$, $t_{ini}$ = 60 s; $V_{pd(m)}$ = 1.2 × $V_{IORM}$ = 2545 $V_{PK}$, $t_m$ = 10 s | ≤ 5 | pC |
| | | Method a: After environmental tests subgroup 1, $V_{ini}$ = $V_{IOTM}$, $t_{ini}$ = 60 s; $V_{pd(m)}$ = 1.6 × $V_{IORM}$ = 3394 $V_{PK}$, $t_m$ = 10 s | ≤ 5 | |
| | | Method b1: At routine test (100% production) and preconditioning (type test) $V_{ini}$ = $V_{IOTM}$, $t_{ini}$ = 1 s; $V_{pd(m)}$ = 1.875 × $V_{IORM}$ = 3977 $V_{PK}$, $t_m$ = 1 s | ≤ 5 | |
| $C_{IO}$ | Barrier capacitance, input to output[5] | $V_{IO}$ = 0.5 sin (2πft), f = 1 MHz | ~ 1 | pF |
| $R_{IO}$ | Insulation resistance, input to output[5] | $V_{IO}$ = 500 V, $T_A$ = 25°C | ≥ $10^{12}$ | Ω |
| | | $V_{IO}$ = 500 V, 100°C ≤ $T_A$ ≤ 125°C | ≥ $10^{11}$ | |
| | | $V_{IO}$ = 500 V at $T_S$ = 150°C | ≥ $10^9$ | |
| | Pollution degree | | 2 | |
| | Climatic category | | 40/125/21 | |
| **UL 1577** | | | | |
| $V_{ISO}$ | Withstand isolation voltage | $V_{TEST}$ = $V_{ISO}$ = 5700 $V_{RMS}$, t = 60 s (qualification); $V_{TEST}$ = 1.2 × $V_{ISO}$ = 6840 $V_{RMS}$, t = 1 s (100% production) | 5700 | $V_{RMS}$ |

(1) Apply creepage and clearance requirements according to the specific equipment isolation standards of an application. Care must be taken to maintain the creepage and clearance distance of a board design to ensure that the mounting pads of the isolator on the printed circuit board (PCB) do not reduce this distance. Creepage and clearance on a PCB become equal in certain cases. Techniques such as inserting grooves and ribs on the PCB are used to help increase these specifications.
(2) This coupler is suitable for safe electrical insulation only within the safety ratings. Compliance with the safety ratings shall be ensured by means of suitable protective circuits.
(3) Testing is carried out in air or oil to determine the intrinsic surge immunity of the isolation barrier.
(4) Apparent charge is electrical discharge caused by a partial discharge (pd).
(5) All pins on each side of the barrier tied together creating a two-terminal device.

## 6.7 Safety Limiting Values

Safety limiting[1] intends to minimize potential damage to the isolation barrier upon failure of input or output circuitry. A failure of the I/O can allow low resistance to ground or the supply and, without current limiting, dissipate sufficient power to overheat the die and damage the isolation barrier, potentially leading to secondary system failures.

| PARAMETER | | TEST CONDITIONS | MIN | TYP | MAX | UNIT |
|---|---|---|---|---|---|---|
| $I_S$ | Safety input, output, or supply current | $R_{θJA}$ = 68.3°C/W, $V_{DD}$ = 15 V, $V_{EE}$ = –5 V, $T_J$ = 150°C, $T_A$ = 25°C | | | 61 | mA |
| | | $R_{θJA}$ = 68.3°C/W, $V_{DD}$ = 20 V, $V_{EE}$ = –5 V, $T_J$ = 150°C, $T_A$ = 25°C | | | 49 | |
| $P_S$ | Safety input, output, or total power | $R_{θJA}$ = 68.3°C/W, $V_{DD}$ = 20 V, $V_{EE}$ = –5 V, $T_J$ = 150°C, $T_A$ = 25°C | | | 1220 | mW |
| $T_S$ | Safety temperature | | | | 150 | °C |

(1) The safety-limiting constraint is the maximum junction temperature specified in the data sheet. The power dissipation and junction-to-air thermal impedance of the device installed in the application hardware determines the junction temperature. The assumed junction-to-air thermal resistance in the *Thermal Information* table is that of a device installed on a high-K test board for leaded surface-mount packages. The power is the recommended maximum input voltage times the current. The junction temperature is then the ambient temperature plus the power times the junction-to-air thermal resistance.

## 6.8 Electrical Characteristics

VCC = 3.3 V or 5.0 V, 1-µF capacitor from VCC to GND, VDD – COM = 20 V, 18 V or 15 V, COM – VEE = 0 V, 5 V, 8 V or 15 V, $C_L$ = 100 pF, –40°C < $T_J$ < 150°C (unless otherwise noted)[1] [2].

| PARAMETER | TEST CONDITIONS | MIN | TYP | MAX | UNIT |
|---|---|---|---|---|---|
| **VCC UVLO THRESHOLD AND DELAY** | | | | | |


Copyright © 2023 Texas Instruments Incorporated

## 6.8 Electrical Characteristics (continued)

VCC = 3.3 V or 5.0 V, 1-µF capacitor from VCC to GND, VDD – COM = 20 V, 18 V or 15 V, COM – VEE = 0 V, 5 V, 8 V or 15 V, $C_L$ = 100 pF, –40°C < $T_J$ < 150°C (unless otherwise noted)[(1) (2)].

| PARAMETER | | TEST CONDITIONS | MIN | TYP | MAX | UNIT |
|---|---|---|---|---|---|---|
| $V_{VCC_ON}$ | VCC–GND | | 2.55 | 2.7 | 2.85 | V |
| $V_{VCC_OFF}$ | | | 2.35 | 2.5 | 2.65 | |
| $V_{VCC_HYS}$ | | | | 0.2 | | |
| $t_{VCCFIL}$ | VCC UVLO Deglitch time | | | 10 | | µs |
| $t_{VCC+ \text{ to OUT}}$ | VCC UVLO on delay to output high | IN+ = VCC, IN– = GND | 28 | 37.8 | 50 | |
| $t_{VCC- \text{ to OUT}}$ | VCC UVLO off delay to output low | | 5 | 10 | 15 | |
| $t_{VCC+ \text{ to RDY}}$ | VCC UVLO on delay to RDY high | $\overline{RST}$/EN = VCC | 30 | 37.8 | 50 | |
| $t_{VCC- \text{ to RDY}}$ | VCC UVLO off delay to RDY low | | 5 | 10 | 15 | |
| **VDD UVLO THRESHOLD AND DELAY** | | | | | | |
| $V_{VDD_ON}$ | VDD–COM | | 10.5 | 12.0 | 12.8 | V |
| $V_{VDD_OFF}$ | | | 9.9 | 10.7 | 11.8 | |
| $V_{VDD_HYS}$ | | | | 0.8 | | |
| $t_{VDDFIL}$ | VDD UVLO Deglitch time | | | 5 | | µs |
| $t_{VDD+ \text{ to OUT}}$ | VDD UVLO on delay to output high | IN+ = VCC, IN– = GND | 2 | 5 | 8 | |
| $t_{VDD- \text{ to OUT}}$ | VDD UVLO off delay to output low | | | 5 | 10 | |
| $t_{VDD+ \text{ to RDY}}$ | VDD UVLO on delay to RDY high | $\overline{RST}$/EN = $\overline{FLT}$=High | | 10 | 15 | |
| $t_{VDD- \text{ to RDY}}$ | VDD UVLO off delay to RDY low | | | 10 | 15 | |
| **VCC, VDD QUIESCENT CURRENT** | | | | | | |
| $I_{VCCQ}$ | VCC quiescent current | OUT(H) = High, $f_S$ = 0Hz, AIN = 2 V | 2.5 | 3 | 4 | mA |
| | | OUT(L) = Low, $f_S$ = 0Hz, AIN = 2 V | 1.45 | 2 | 2.75 | |
| $I_{VDDQ}$ | VDD quiescent current | OUT(H) = High, $f_S$ = 0Hz, AIN = 2 V | 3.6 | 4 | 5.9 | mA |
| | | OUT(L) = Low, $f_S$ = 0Hz, AIN = 2 V | 3.1 | 3.7 | 5.3 | |
| **LOGIC INPUTS — IN+, IN– and $\overline{RST}$/EN** | | | | | | |
| $V_{INH}$ | Input high threshold | $V_{CC}$ = 3.3 V | | 1.85 | 2.31 | V |
| $V_{INL}$ | Input low threshold | $V_{CC}$ = 3.3 V | 0.99 | 1.52 | | V |
| $V_{INHYS}$ | Input threshold hysteresis | $V_{CC}$ = 3.3 V | | 0.33 | | V |
| $I_{IH}$ | Input high level input leakage current | $V_{IN}$ = VCC | | 90 | | µA |
| $I_{IL}$ | Input low level input leakage | $V_{IN}$ = GND | | –90 | | µA |
| $R_{IND}$ | Input pins pull down resistance | see *Detailed Description* for more information | | 55 | | kΩ |
| $R_{INU}$ | Input pins pull up resistance | see *Detailed Description* for more information | | 55 | | |
| $T_{INFIL}$ | IN+, IN– and $\overline{RST}$/EN deglitch (ON and OFF) filter time | $f_S$ = 50 kHz | 28 | 40 | 60 | ns |
| $T_{RSTFIL}$ | Deglitch filter time to reset /FLT | | 400 | 650 | 800 | ns |
| **GATE DRIVER STAGE** | | | | | | |
| $I_{OUT}$, $I_{OUTH}$ | Peak source current | $C_L$ = 0.18 µF, $f_S$ = 1 kHz | | 10 | | A |
| $I_{OUT}$, $I_{OUTL}$ | Peak sink current | | | 10 | | A |
| $R_{OUTH}$ | Output pull-up resistance | $I_{OUT}$ = –0.1 A | | 2.5 | | Ω |
| $R_{OUTL}$ | Output pull-down resistance | $I_{OUT}$ = 0.1 A | | 0.3 | | Ω |
| $V_{OUTH}$ | High level output voltage | $I_{OUT}$ = –0.2 A, $V_{DD}$ = 18 V | | 17.5 | | V |
| $V_{OUTL}$ | Low level output voltage | $I_{OUT}$ = 0.2 A | | 60 | | mV |
| **ACTIVE PULLDOWN** | | | | | | |
| $V_{OUTPD}$ | Output active pull down on OUT, OUTL | $I_{OUTL}$ or $I_{OUT}$ = 0.1 × $I_{OUT(L)(typ)}$, VDD=OPEN, VEE=COM | 1.5 | 2 | 2.5 | V |
| **INTERNAL ACTIVE MILLER CLAMP** | | | | | | |
| $V_{CLMPTH}$ | Miller clamp threshold voltage | Reference to VEE | 1.5 | 2.0 | 2.5 | V |
| $V_{CLMPI}$ | Output low clamp voltage | $I_{CLMPI}$ = 1 A | | VEE + 0.5 | | V |
| $I_{CLMPI}$ | Output low clamp current | $V_{CLMPI}$ = 0 V, VEE = –2.5 V | | 4 | | A |
| $R_{CLMPI}$ | Miller clamp pull down resistance | $I_{CLMPI}$ = 0.2 A | | 0.6 | | Ω |

Copyright © 2023 Texas Instruments Incorporated

## 6.8 Electrical Characteristics (continued)

VCC = 3.3 V or 5.0 V, 1-µF capacitor from VCC to GND, VDD – COM = 20 V, 18 V or 15 V, COM – VEE = 0 V, 5 V, 8 V or 15 V, $C_L$ = 100 pF, –40°C < $T_J$ < 150°C (unless otherwise noted)(1) (2).

| PARAMETER | | TEST CONDITIONS | MIN | TYP | MAX | UNIT |
|---|---|---|---|---|---|---|
| $t_{DCLMPI}$ | Miller clamp ON delay time | $C_L$ = 1.8 nF | | 15 | 50 | ns |
| **SHORT CIRCUIT CLAMPING** | | | | | | |
| $V_{CLP-OUT(H)}$ | $V_{OUT}$–VDD, $V_{OUTH}$–VDD | OUT = Low, $I_{OUT(H)}$ = 500 mA, $t_{CLP}$ =1 0 us | | 0.9 | | V |
| $V_{CLP-OUT(L)}$ | $V_{OUT}$–VDD, $V_{OUTL}$–VDD | OUT = High, $I_{OUT(L)}$ = 500 mA, $t_{CLP}$ = 10 us | | 1.8 | | V |
| $V_{CLP-CLMPI}$ | $V_{CLMPI}$–VDD | OUT = High, $I_{CLMPI}$ = 20 mA, $t_{CLP}$ = 10 us | | 1.0 | | V |
| **DESAT PROTECTION** | | | | | | |
| $I_{CHG}$ | Blanking capacitor charge current | $V_{DESAT}$ = 2.0 V | 430 | 500 | 570 | µA |
| $I_{DCHG}$ | Blanking capacitor discharge current | $V_{DESAT}$ = 6.0 V | 10 | 15 | | mA |
| $V_{DESAT}$ | Detection Threshold | | 8.5 | 9.15 | 9.8 | V |
| $t_{DESATLEB}$ | Leading edge blank time | | | 200 200 | | ns |
| $t_{DESATFIL}$ | DESAT deglitch filter | | 50 | 140 | 230 | ns |
| $t_{DESATOFF}$ | DESAT propagation delay to OUT(L) 90% | | | 200 | 300 | ns |
| $t_{DESATFLT}$ | DESAT to $\overline{FLT}$ low delay | | 400 | 580 | 750 | ns |
| **INTERNAL SOFT TURN-OFF** | | | | | | |
| $I_{STO}$ | Soft turn-off current on fault conditions | $V_{DD}$-$V_{EE}$=20V, $V_{OUTL}$-COM=8V | 250 | 400 | 570 | mA |
| **ISOLATED TEMPERATURE SENSE AND MONITOR (AIN–APWM)** | | | | | | |
| $V_{AIN}$ | Analog sensing voltage range | | 0.6 | | 4.5 | V |
| $I_{AIN}$ | Internal current source | $V_{AIN}$ = 2.5 V, -40°C < $T_J$< 150°C | 196 | 200 | 209 | µA |
| $f_{APWM}$ | APWM output frequency | $V_{AIN}$ = 2.5 V | 380 | 400 | 420 | kHz |
| $BW_{AIN}$ | AIN–APWM bandwidth | | | 10 | | kHz |
| $D_{APWM}$ | APWM Dutycycle | $V_{AIN}$ = 0.6 V | 86.5 | 88 | 89.5 | % |
| | | $V_{AIN}$ = 2.5 V | 48.5 | 50 | 51.5 | |
| | | $V_{AIN}$ = 4.5 V | 7.5 | 10 | 11.5 | |
| **$\overline{FLT}$ AND RDY REPORTING** | | | | | | |
| $t_{RDYHLD}$ | VDD UVLO RDY low minimum holding time | | 0.55 | | 1 | ms |
| $t_{FLTMUTE}$ | Output mute time on fault | Reset fault through $\overline{RST}$/EN | 0.55 | | 1 | ms |
| $R_{ODON}$ | Open drain output on resistance | $I_{ODON}$ = 5 mA | | 30 | | Ω |
| $V_{ODL}$ | Open drain low output voltage | $I_{ODON}$ = 5 mA | | | 0.3 | V |
| **COMMON MODE TRANSIENT IMMUNITY** | | | | | | |
| CMTI | Common-mode transient immunity | | 150 | | | V/ns |

(1) Current are positive into and negative out of the specified terminal.
(2) All voltages are referenced to COM unless otherwise notified.

## 6.9 Safety-Related Certifications

| VDE | UL |
|---|---|
| Certified according to DIN EN IEC 60747-17 (VDE 0884-17) | Recognized under UL 1577 Component Recognition Program, CSA Component Acceptance Notice 5A |
| Reinforced insulation<br>Maximum transient isolation voltage, 8000 $V_{PK}$;<br>Maximum repetitive peak isolation voltage, 2121 $V_{PK}$;<br>Maximum surge isolation voltage, 8000 $V_{PK}$ | Single protection, 5700 $V_{RMS}$ |
| Certificate number: 40040142 | File Number: E181974 |


Copyright © 2023 Texas Instruments Incorporated

## 6.10 Switching Characteristics

VCC=5.0V, 1uF capacitor from VCC to GND, VDD–COM=20V, 18V or 15V, COM–VEE = 3V, 5V or 8V, $C_L$=100pF, –40°C<$T_J$<150°C (unless otherwise noted)

| PARAMETER | | TEST CONDITIONS | MIN | TYP | MAX | UNIT |
|---|---|---|---|---|---|---|
| $t_{PDHL}$ | Propagation delay time – High to Low | | 60 | 90 | 130 | ns |
| $t_{PDLH}$ | Propagation delay time – Low to High | | 60 | 90 | 130 | |
| PWD | Pulse width distortion $\lvert t_{PDHL} – t_{PDLH}\rvert$ | | | | 30 | |
| $t_{sk-pp}$ | Part to Part skew | Rising or Falling Propagation Delay | | | 30 | |
| $t_r$ | Driver output rise time | $C_L$ = 10 nF | | 33 | | |
| $t_f$ | Driver output fall time | $C_L$ = 10 nF | | 27 | | |
| $f_{MAX}$ | Maximum switching frequency | | | | 1 | MHz |

Copyright © 2023 Texas Instruments Incorporated

## 6.11 Insulation Characteristics Curves

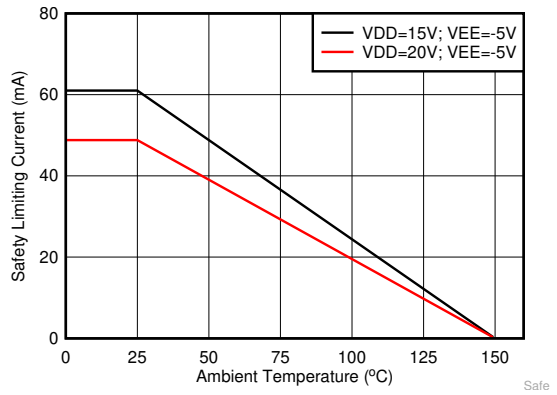


**Figure 6-1. Thermal Derating Curve for Limiting Current per VDE**

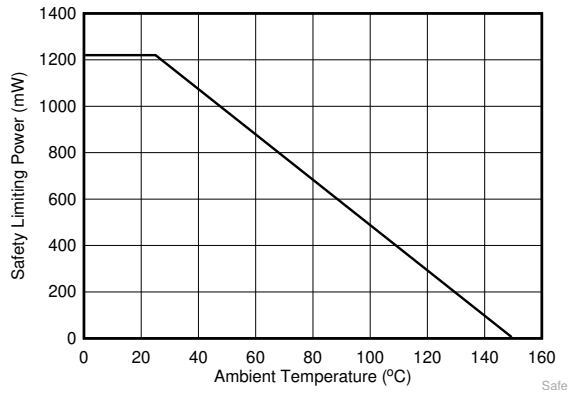


**Figure 6-2. Thermal Derating Curve for Limiting Power per VDE**

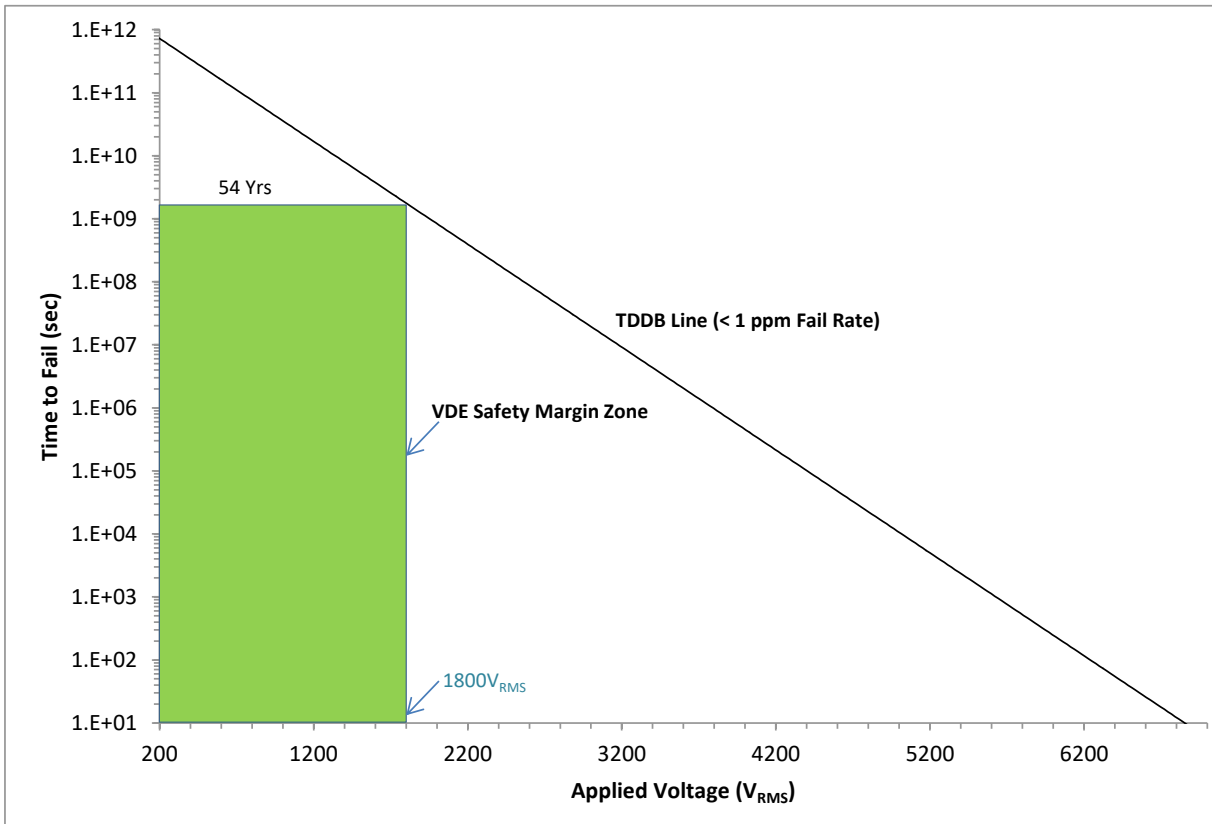


**Figure 6-3. Reinforced Isolation Capacitor Life Time Projection**


Copyright © 2023 Texas Instruments Incorporated

## 6.12 Typical Characteristics

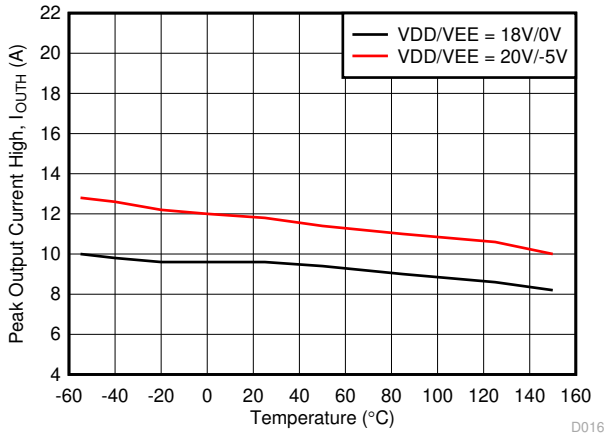


**Figure 6-4. Output High Drive Current vs Temperature**

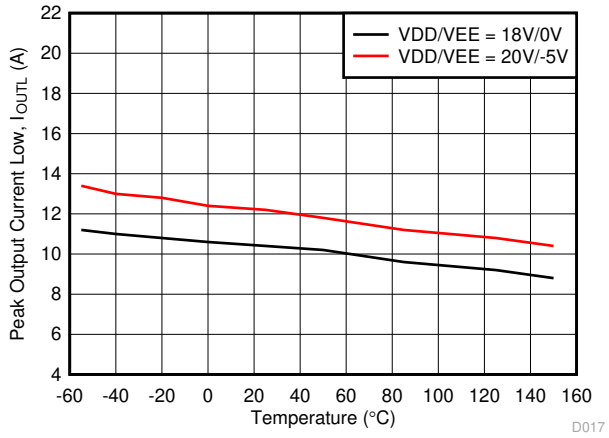


**Figure 6-5. Output Low Driver Current vs Temperature**

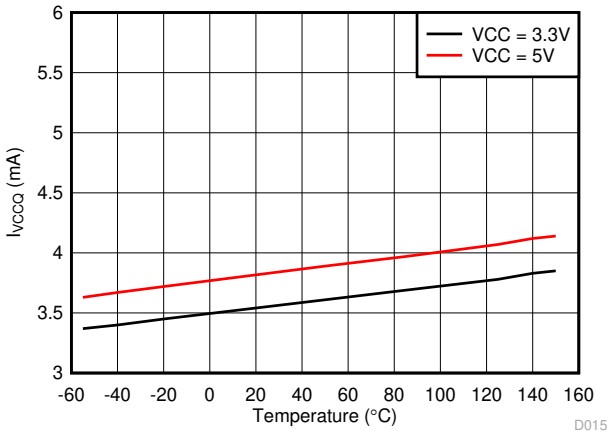


IN+ = High IN- = Low

**Figure 6-6. $I_{VCCQ}$ Supply Current vs Temperature**

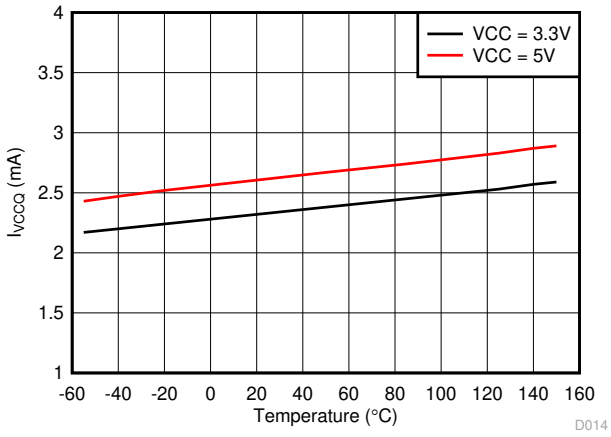


IN+ = Low IN- = Low

**Figure 6-7. $I_{VCCQ}$ Supply Current vs Temperature**

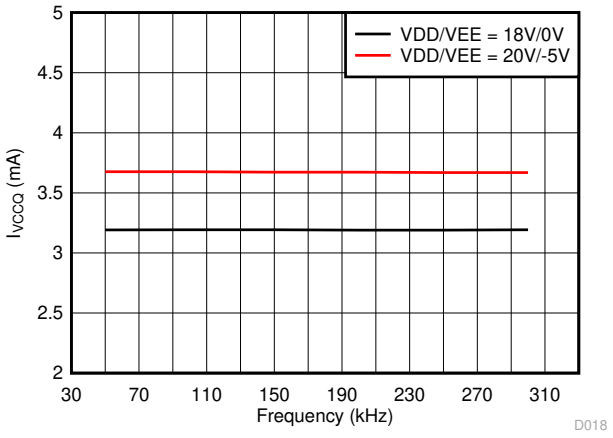


**Figure 6-8. $I_{VCCQ}$ Supply Current vs Input Frequency**

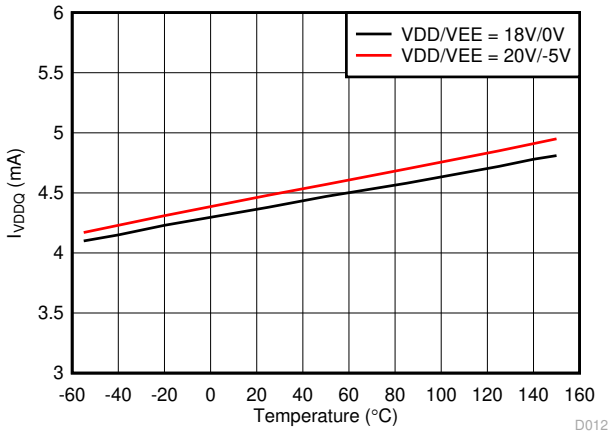


IN+ = High IN- = Low

**Figure 6-9. $I_{VDDQ}$ Supply Current vs Temperature**

## 6.12 Typical Characteristics (continued)

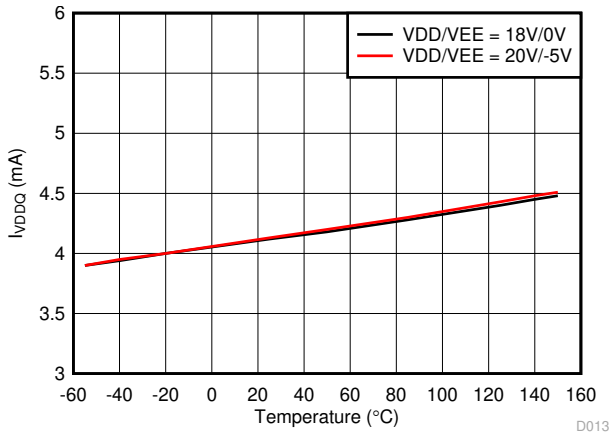


IN+ = Low IN- = Low

**Figure 6-10. $I_{VDDQ}$ Supply Current vs Temperature**

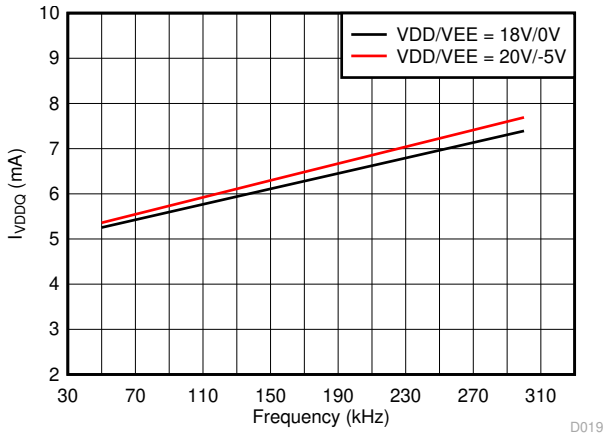


**Figure 6-11. $I_{VDDQ}$ Supply Current vs Input Frequency**

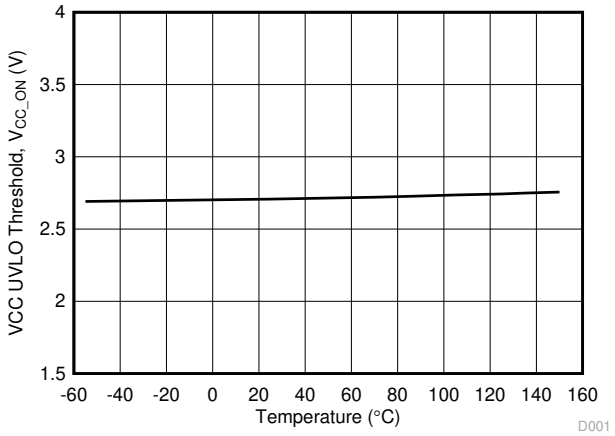


**Figure 6-12. VCC UVLO vs Temperature**

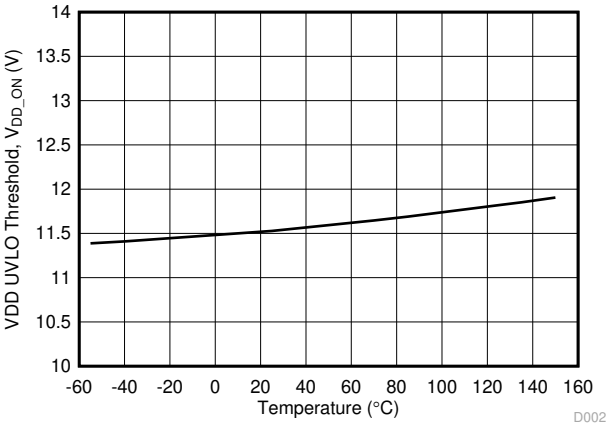


**Figure 6-13. VDD UVLO vs Temperature**

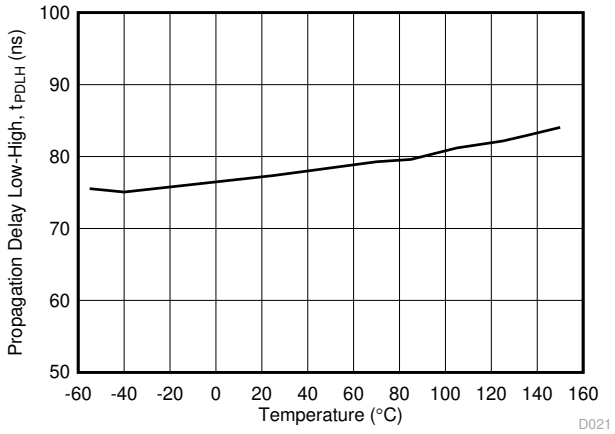


$V_{CC}$ = 3.3V $V_{DD}$=18V $C_L$ = 100pF
$R_{ON}$ = 0Ω $R_{OFF}$ = 0Ω

**Figure 6-14. Propagation Delay $t_{PDLH}$ vs Temperature**

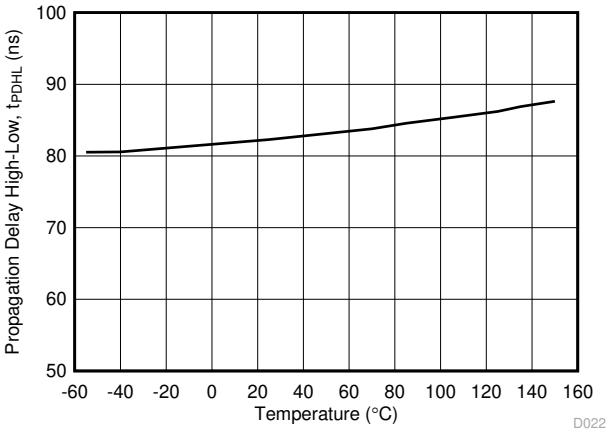


$V_{CC}$ = 3.3V $V_{DD}$=18V $C_L$ = 100pF
$R_{ON}$ = 0Ω $R_{OFF}$ = 0Ω

**Figure 6-15. Propagation Delay $t_{PDHL}$ vs Temperature**


Copyright © 2023 Texas Instruments Incorporated

## 6.12 Typical Characteristics (continued)

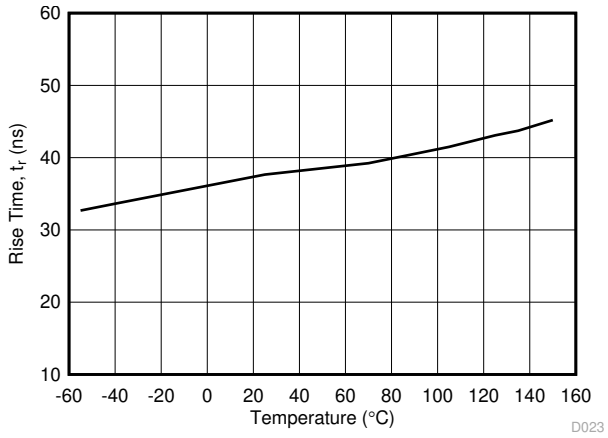


$V_{CC}$ = 3.3V $V_{DD}$=18V $C_L$ = 10nF
$R_{ON}$ = 0Ω $R_{OFF}$ = 0Ω

**Figure 6-16. $t_r$ Rise Time vs Temperature**

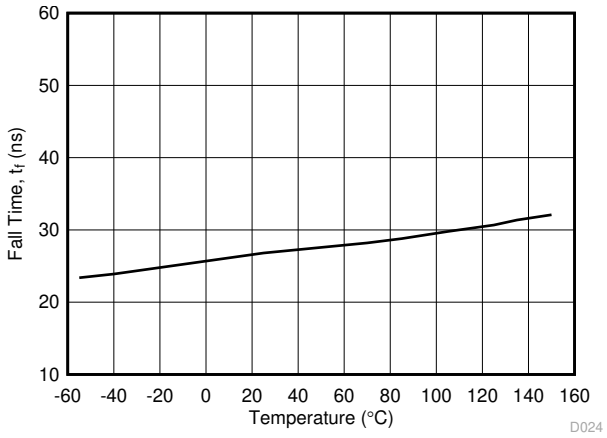


$V_{CC}$ = 3.3V $V_{DD}$=18V $C_L$ = 10nF
$R_{ON}$ = 0Ω $R_{OFF}$ = 0Ω

**Figure 6-17. $t_f$ Fall Time vs Temperature**

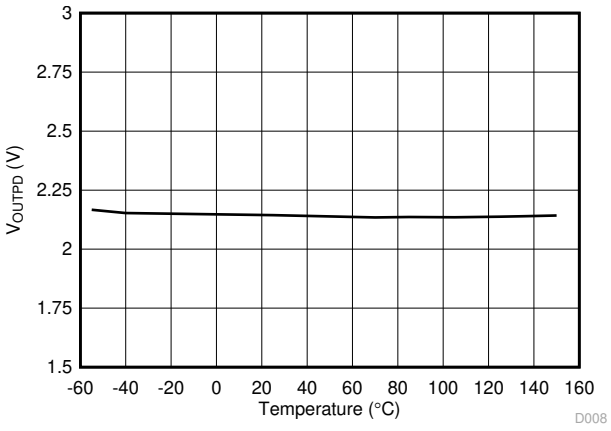


**Figure 6-18. $V_{OUTPD}$ Output Active Pulldown Voltage vs Temperature**

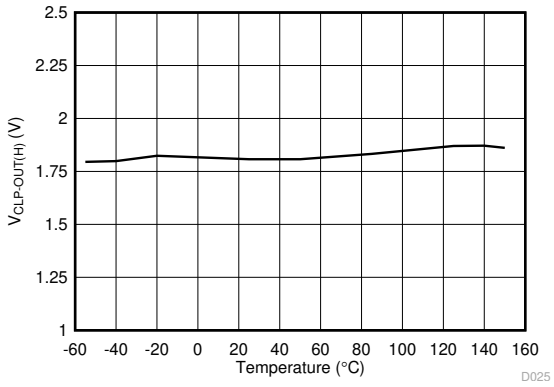


**Figure 6-19. $V_{CLP-OUT(H)}$ Short Circuit Clamping Voltage vs Temperature**

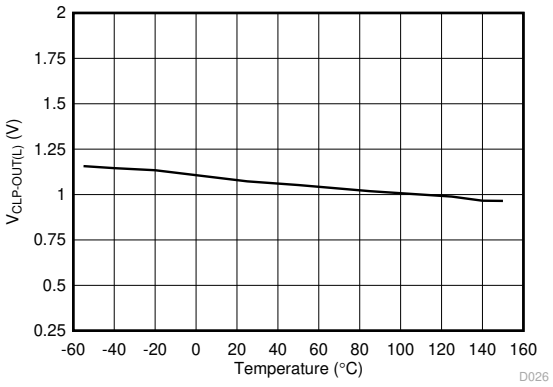


**Figure 6-20. $V_{CLP-OUT(L)}$ Short Circuit Clamping Voltage vs Temperature**

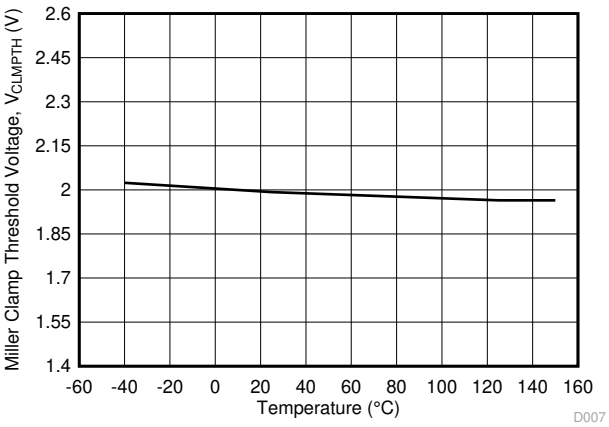


**Figure 6-21. $V_{CLMPTH}$ Miller Clamp Threshold Voltage vs Temperature**

## 6.12 Typical Characteristics (continued)

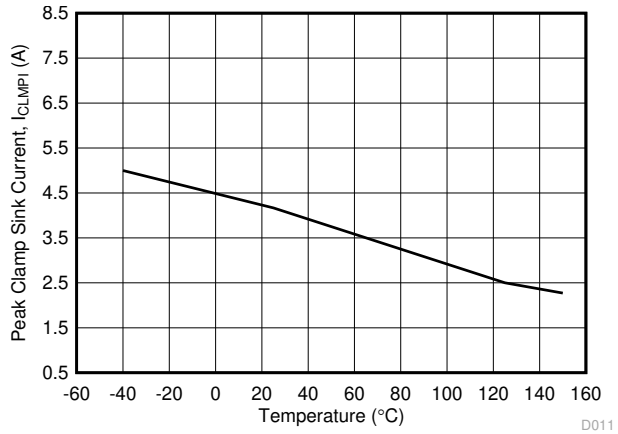


**Figure 6-22. $I_{CLMPI}$ Miller Clamp Sink Current vs Temperature**

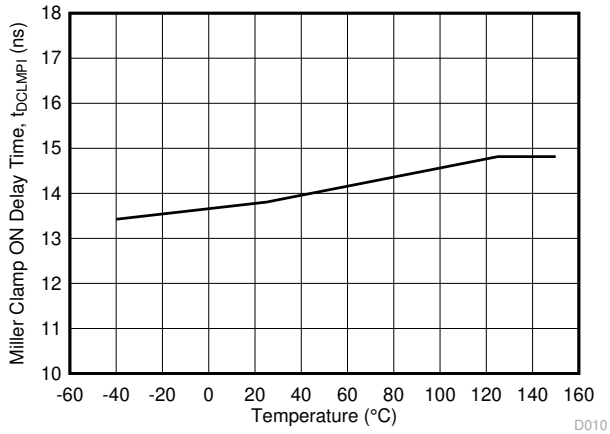


**Figure 6-23. $t_{DCLMPI}$ Miller Clamp ON Delay Time vs Temperature**

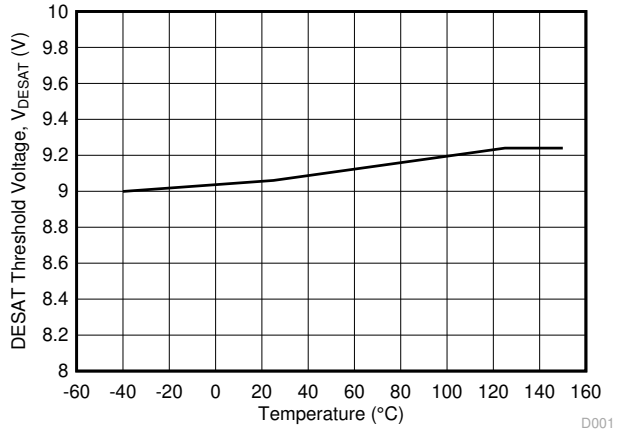


**Figure 6-24. $V_{DESAT}$ DESAT Threshold Voltage vs Temperature**

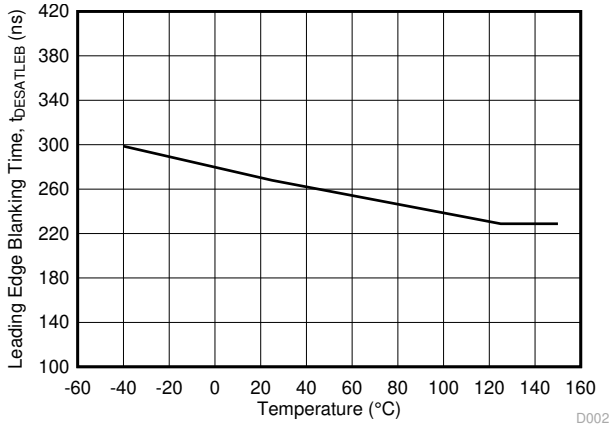


**Figure 6-25. $t_{DESATLEB}$ DESAT Leading Edge Blanking Time vs Temperature**

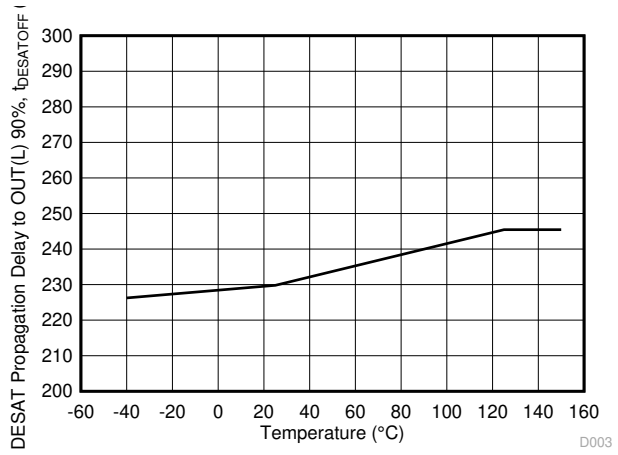


**Figure 6-26. $t_{DESATOFF}$ DESAT Propagation Delay to OUT(L) 90% vs Temperature**

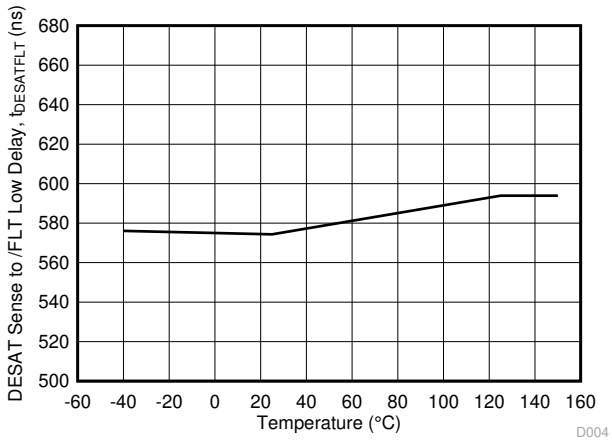


**Figure 6-27. $t_{DESATFLT}$ DESAT Sense to /FLT Low Delay Time vs Temperature**


Copyright © 2023 Texas Instruments Incorporated

## 6.12 Typical Characteristics (continued)

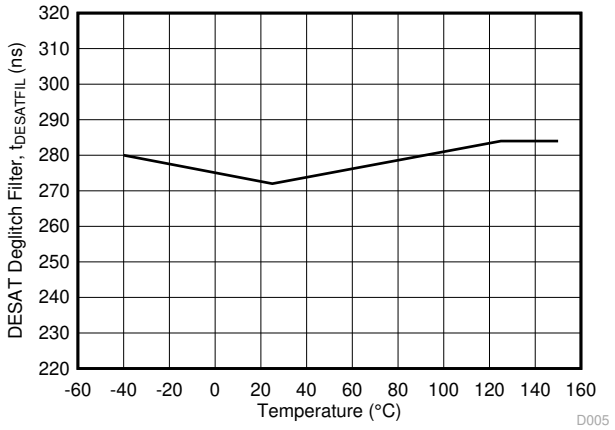


**Figure 6-28. $t_{DESATFIL}$ DESAT Deglitch Filter vs Temperature**

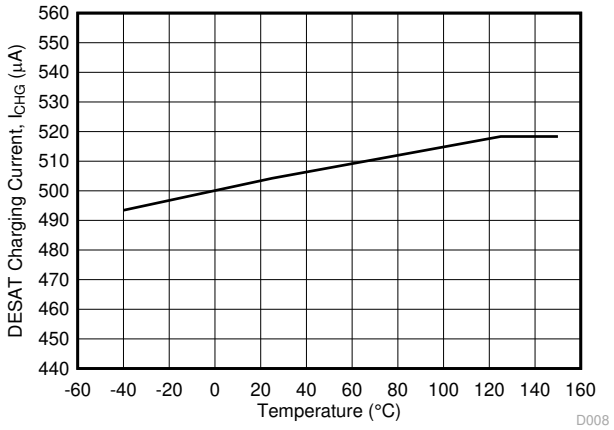


**Figure 6-29. $I_{CHG}$ DESAT Charging Current vs Temperature**

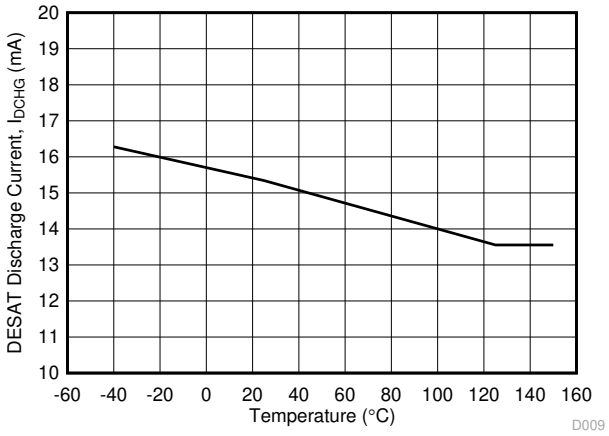


**Figure 6-30. $I_{DCHG}$ DESAT Discharge Current vs Temperature**

# 7 Parameter Measurement Information

## 7.1 Propagation Delay

### 7.1.1 Regular Turn-OFF

Figure 7-1 shows the propagation delay measurement for non-inverting configurations. Figure 7-2 shows the propagation delay measurement with the inverting configurations.

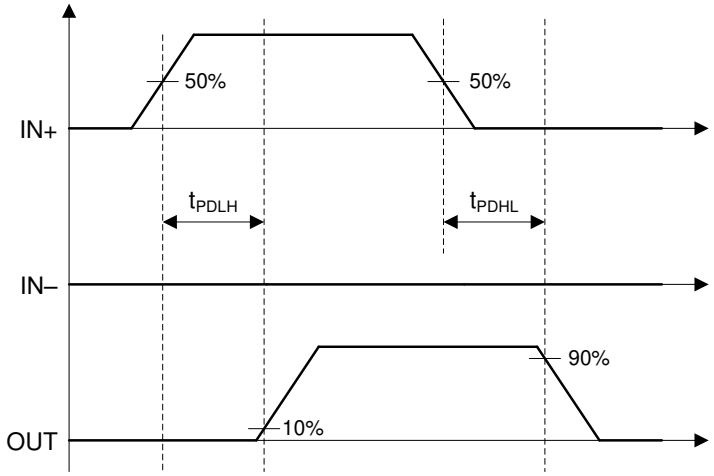


**Figure 7-1. Non-inverting Logic Propagation Delay Measurement**

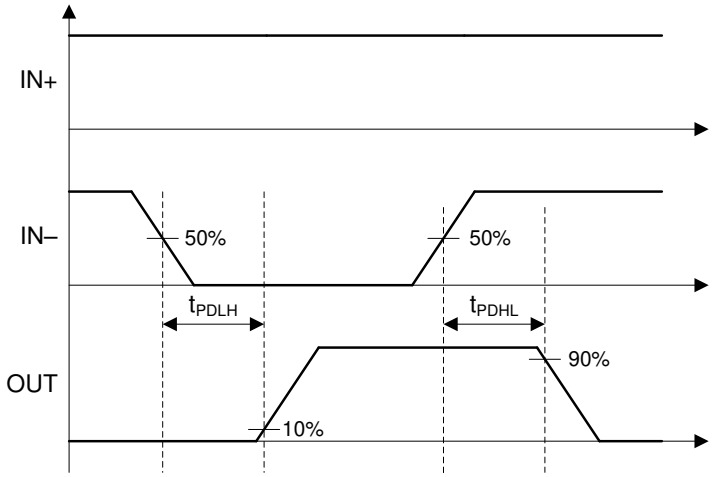


**Figure 7-2. Inverting Logic Propagation Delay Measurement**


Copyright © 2023 Texas Instruments Incorporated

## 7.2 Input Deglitch Filter

In order to increase the robustness of gate driver over noise transient and accidental small pulses on the input pins, that is. IN+, IN–, $\overline{RST}$/EN, a 40-ns deglitch filter is designed to filter out the transients and make sure there is no faulty output responses or accidental driver malfunctions. When the IN+ or IN– PWM pulse is smaller than the input deglitch filter width, $T_{INFIL}$, there is no responses on OUT drive signal. Figure 7-3 and Figure 7-4 show the IN+ pin ON and OFF pulse deglitch filter effect. Figure 7-5 and Figure 7-6 show the IN– pin ON and OFF pulse deglitch filter effect.

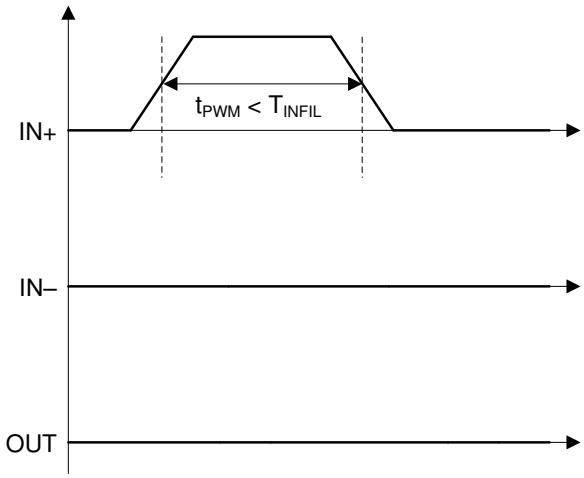


**Figure 7-3. IN+ ON Deglitch Filter**

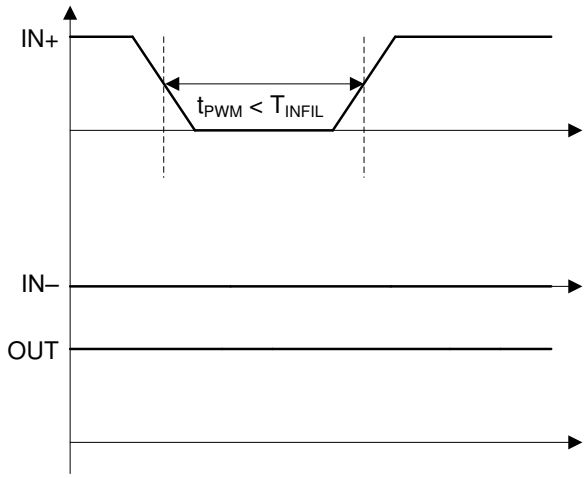


**Figure 7-4. IN+ OFF Deglitch Filter**

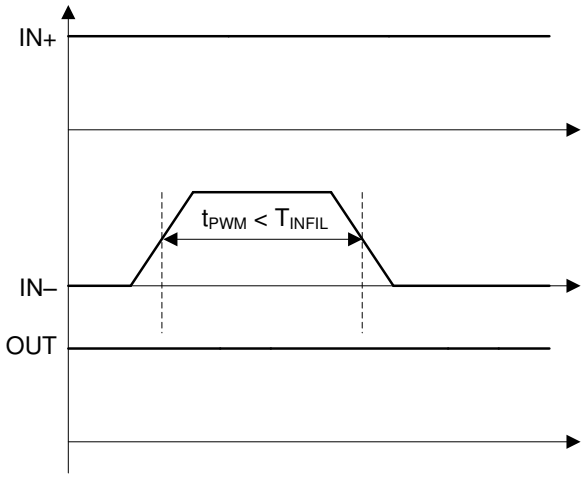


**Figure 7-5. IN– ON Deglitch Filter**

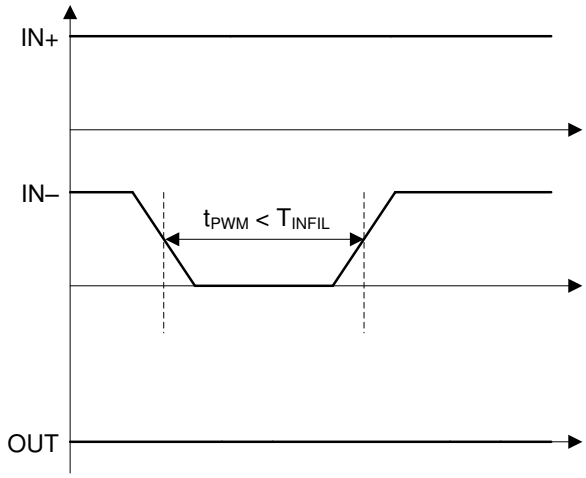


**Figure 7-6. IN– OFF Deglitch Filter**

## 7.3 Active Miller Clamp

### 7.3.1 Internal On-chip Active Miller Clamp

For a gate driver application with unipolar bias supply or bipolar supply with small negative turn-off voltage, active miller clamp can help add a additional low impedance path to bypass the miller current and prevent the high dV/dt introduced unintentional turn-on through the miller capacitance. Figure 7-7 shows the timing diagram for on-chip internal miller clamp function.

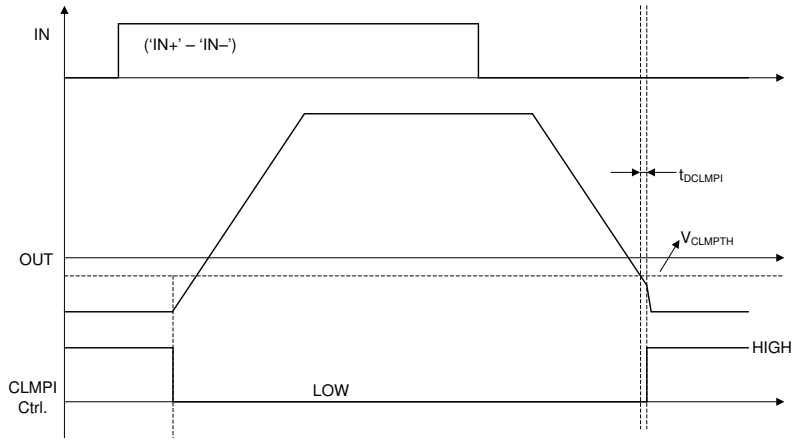


**Figure 7-7. Timing Diagram for Internal Active Miller Clamp Function**


Copyright © 2023 Texas Instruments Incorporated

## 7.4 Undervoltage Lockout (UVLO)

UVLO is one of the key protection features designed to protect the system in case of bias supply failures on VCC — primary side power supply, and VDD — secondary side power supply.

### 7.4.1 VCC UVLO

The VCC UVLO protection details are discussed in this section. Figure 7-8 shows the timing diagram illustrating the definition of UVLO ON/OFF threshold, deglitch filter, response time, RDY and AIN–APWM.

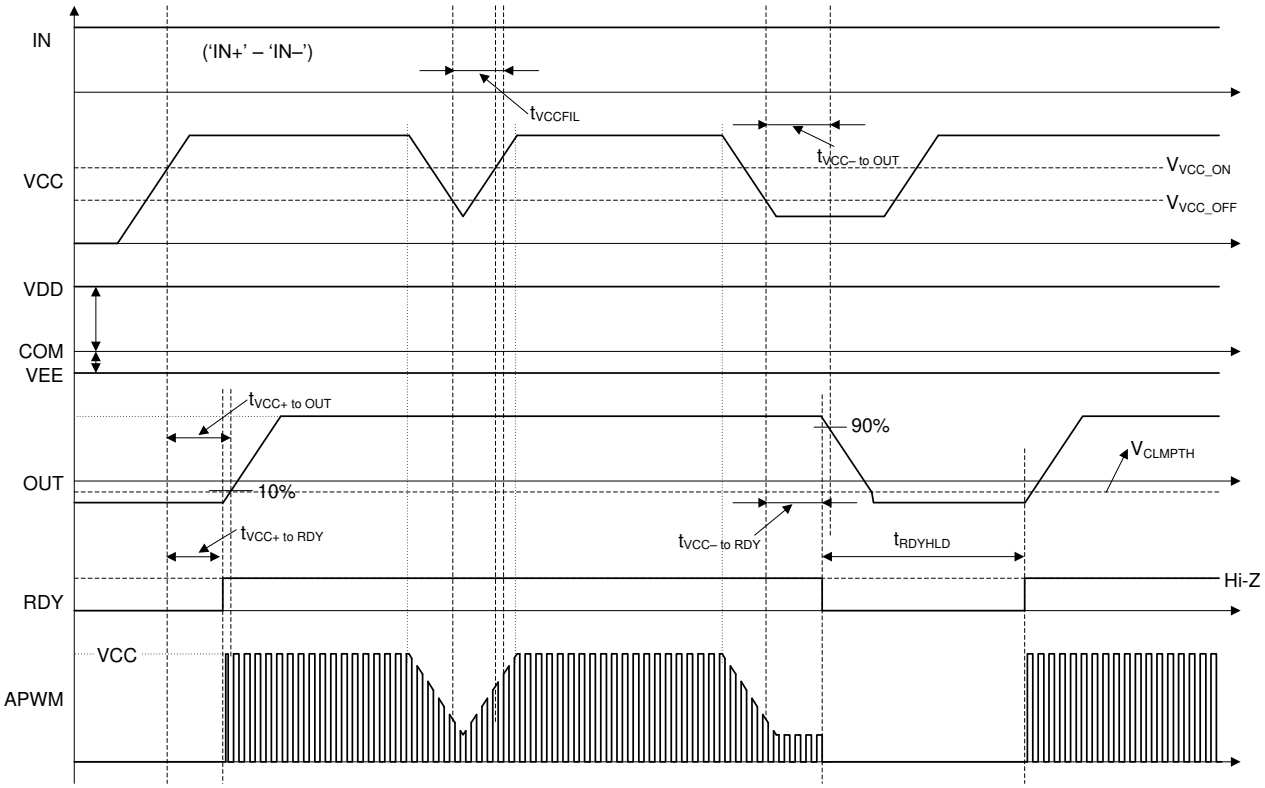


**Figure 7-8. VCC UVLO Protection Timing Diagram**

### 7.4.2 VDD UVLO

The VDD UVLO protection details are discussed in this section. Figure 7-9 shows the timing diagram illustrating the definition of UVLO ON/OFF threshold, deglitch filter, response time, RDY and AIN–APWM.

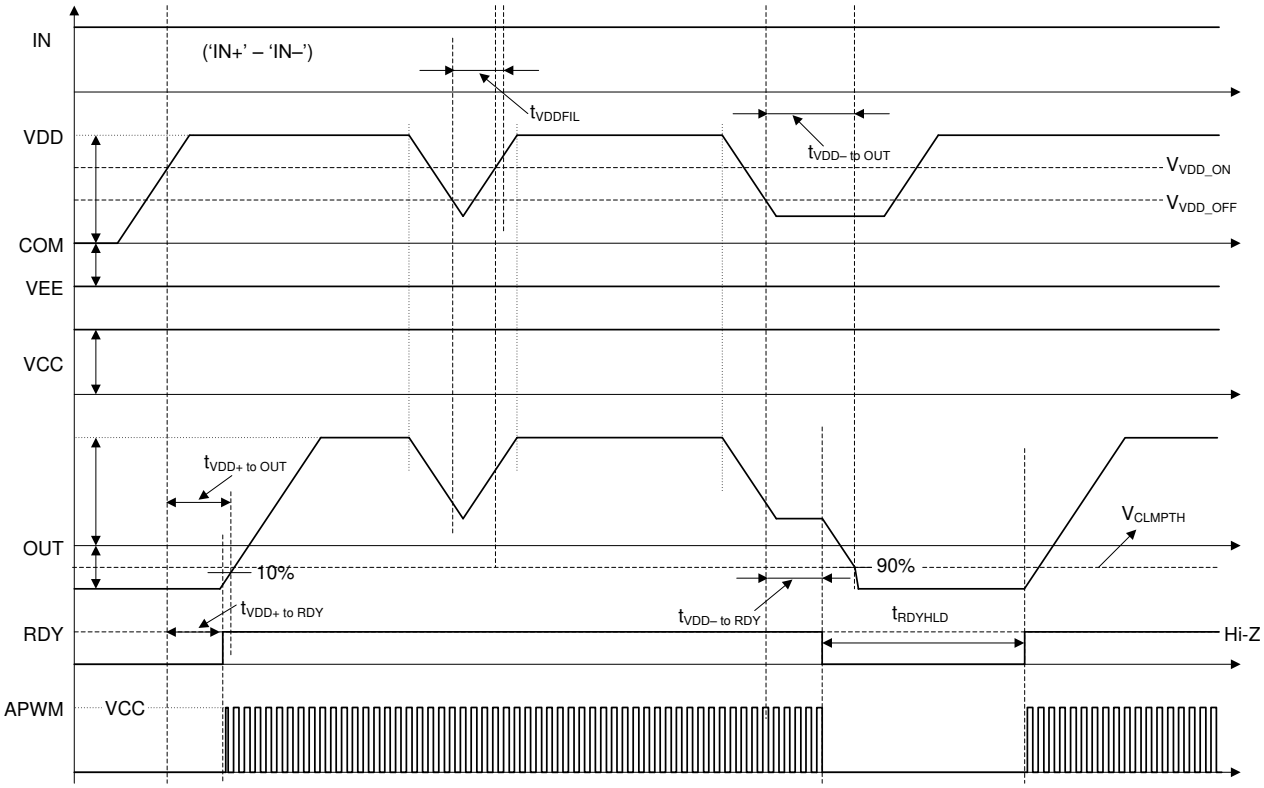


**Figure 7-9. VDD UVLO Protection Timing Diagram**


Copyright © 2023 Texas Instruments Incorporated

## 7.5 Desaturation (DESAT) Protection

### 7.5.1 DESAT Protection with Soft Turn-OFF

DESAT function is used to detect $V_{DS}$ for SiC-MOSFETs or $V_{CE}$ for IGBTs under over current conditions. Figure 7-10 shows the timing diagram of DESAT operation with soft turn-off during the turning on transition.

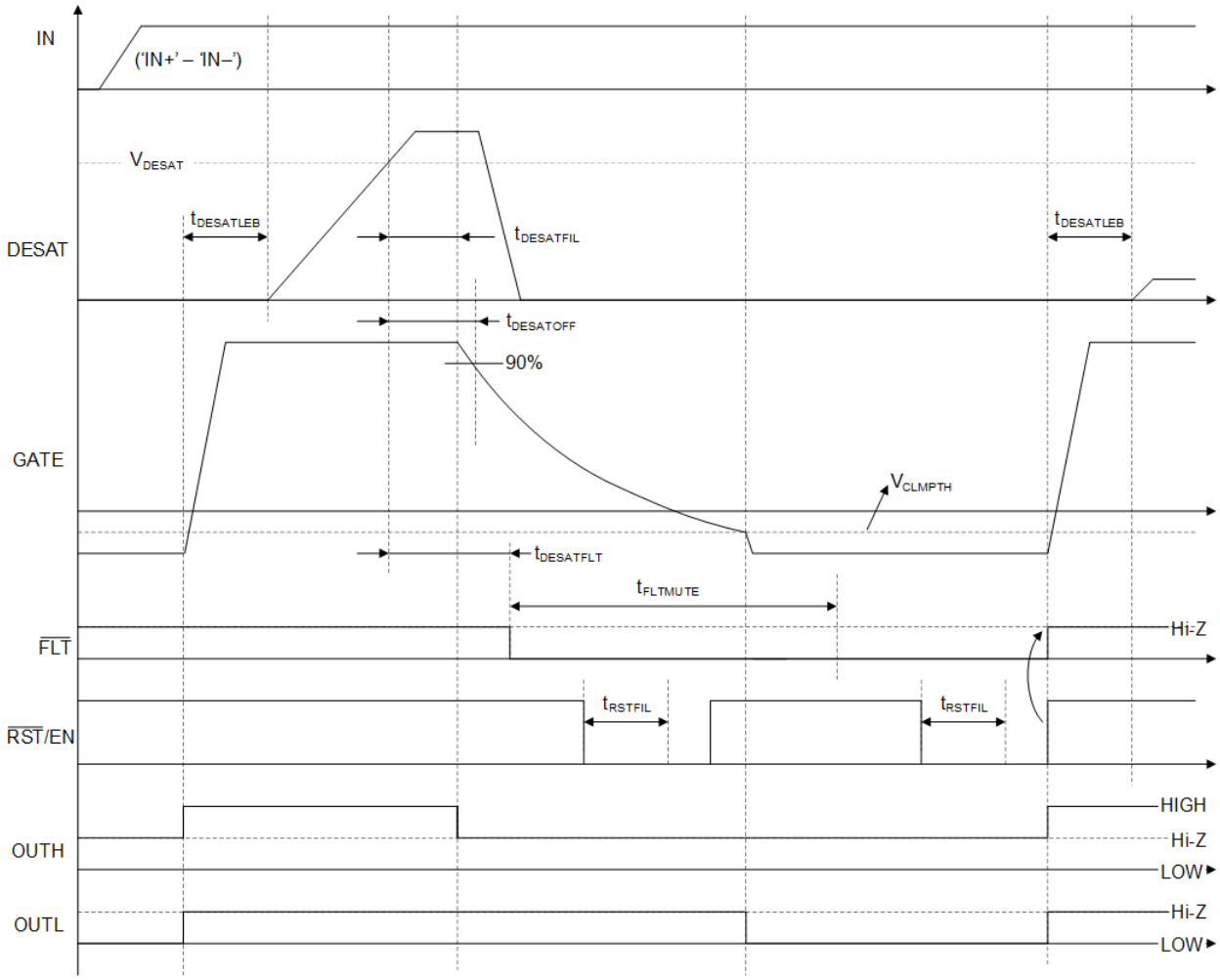


**Figure 7-10. DESAT Protection With Soft Turn-OFF During Turn-ON Transition**

Figure 7-11 shows the timing diagram of DESAT protection while the power device is already turned on.

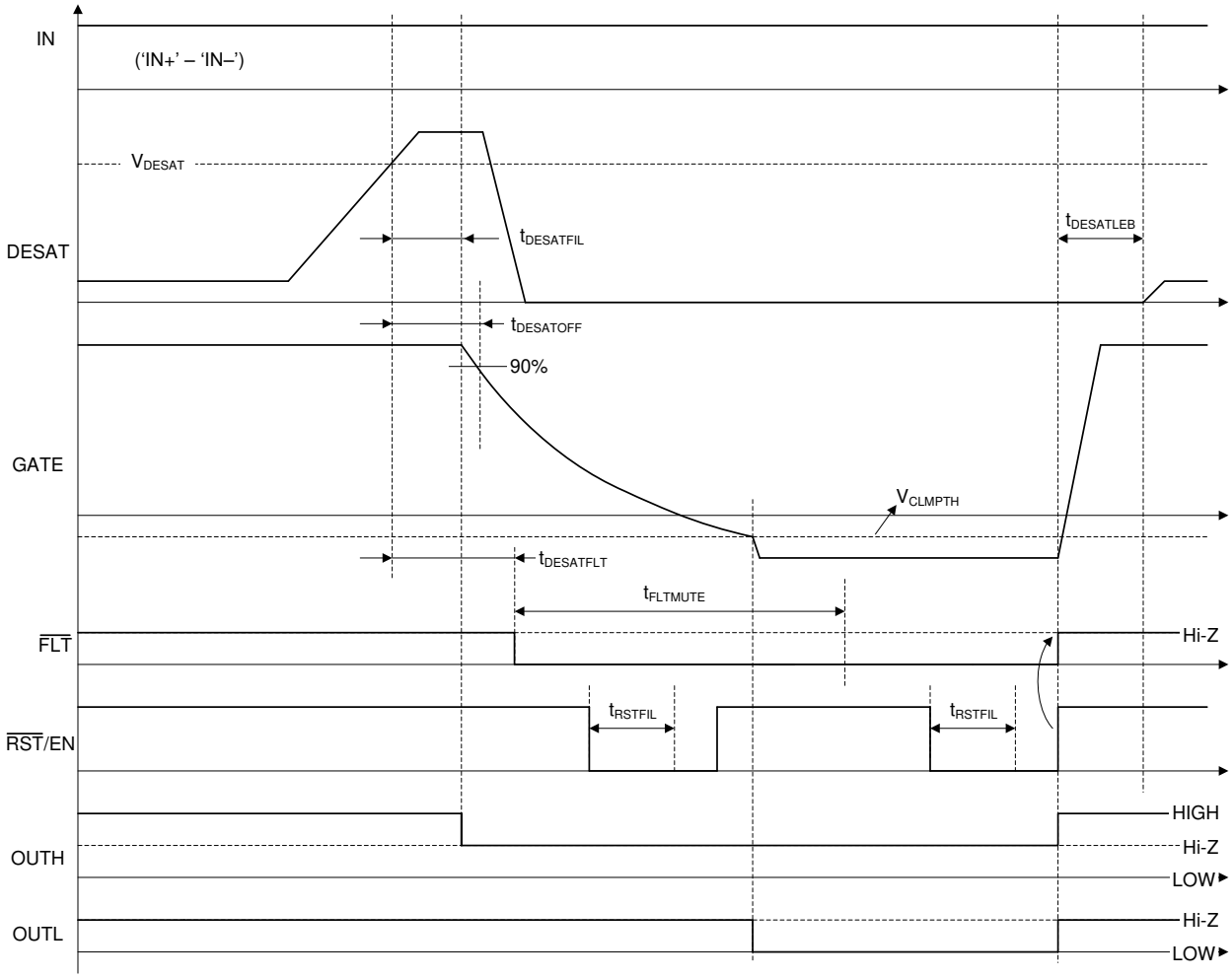


**Figure 7-11. DESAT Protection With Soft Turn-OFF While Power Device is ON**


Copyright © 2023 Texas Instruments Incorporated

# 8 Detailed Description

## 8.1 Overview

The UCC21750 device is an advanced isolated gate driver with state-of-art protection and sensing features for SiC MOSFETs and IGBTs. The device can support up to 2121-V DC operating voltage based on SiC MOSFETs and IGBTs, and can be used to above 10-kW applications, such as HEV/EV traction inverter, motor drive, on-board and off-board battery charger, solar inverter, and so forth. The galvanic isolation is implemented by the capacitive isolation technology, which can realize a reliable reinforced isolation between the low voltage DSP/MCU and high voltage side.

The ±10-A peak sink and source current of the UCC21750 can drive the SiC MOSFET modules and IGBT modules directly without an extra buffer. The driver can also be used to drive higher power modules or parallel modules with external buffer stage. The input side is isolated with the output side with a reinforced isolation barrier based on capacitive isolation technology. The device can support up to 1.5-$kV_{RMS}$ working voltage, 12.8-$kV_{PK}$ surge immunity with longer than 40 years isolation barrier life. The strong drive strength helps to switch the device fast and reduce the switching loss, while the 150-V/ns minimum CMTI assures the reliability of the system with fast switching speed. The small propagation delay and part-to-part skew can minimize the deadtime setting, so the conduction loss can be reduced.

The device includes extensive protection and monitor features to increase the reliability and robustness of the SiC MOSFET and IGBT based systems. The 12-V output side power supply UVLO is suitable for switches with gate voltage ≥ 15 V. The active miller clamp feature prevents the false turn on causing by miller capacitance during fast switching. The device has the state-of-art DESAT detection time and fault reporting function to the low voltage side DSP/MCU. The soft turn-off is triggered when the DESAT fault is detected, minimizing the short circuit energy while reducing the overshoot voltage on the switches.

The isolated analog to PWM sensor can be used as switch temperature sensing, DC bus voltage sensing, auxiliary power supply sensing, and so forth. The PWM signal can be fed directly to DSP/MCU or through a low-pass-filter as an analog signal.

Copyright © 2023 Texas Instruments Incorporated

## 8.2 Functional Block Diagram

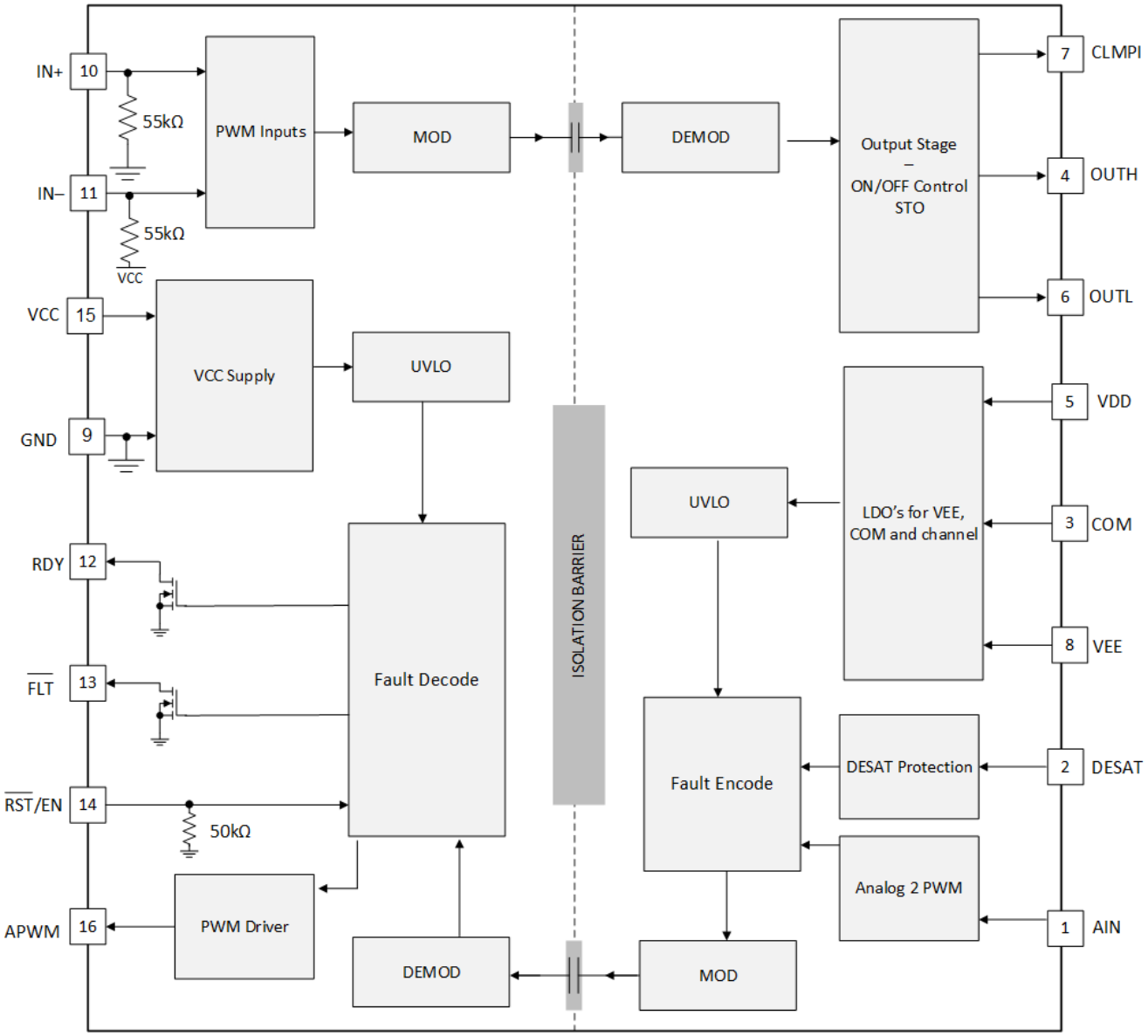


## 8.3 Feature Description

### 8.3.1 Power Supply

The input side power supply VCC can support a wide voltage range from 3 V to 5.5 V. The device supports both unipolar and bipolar power supply on the output side, with a wide range from 13 V to 33 V from VDD to VEE. The negative power supply with respect to switch source or emitter is usually adopted to avoid false turn on when the other switch in the phase leg is turned on. The negative voltage is especially important for SiC MOSFET due to its fast switching speed.

### 8.3.2 Driver Stage

The UCC21750 has ±10-A peak drive strength and is suitable for high power applications. The high drive strength can drive a SiC MOSFET module, IGBT module or paralleled discrete devices directly without extra buffer stage. The UCC21750 can also be used to drive higher power modules or parallel modules with extra buffer stage. Regardless of the values of VDD, the peak sink and source current can be kept at 10 A. The driver features an important safety function wherein, when the input pins are in floating condition, the OUTH/OUTL is held in LOW state. The split output of the driver stage is depicted in Figure 8-1. The driver has rail-to-rail output


Copyright © 2023 Texas Instruments Incorporated

by implementing a hybrid pull-up structure with a P-Channel MOSFET in parallel with an N-Channel MOSFET, and an N-Channel MOSFET to pulldown. The pull-up NMOS is the same as the pull down NMOS, so the on resistance $R_{NMOS}$ is the same as $R_{OL}$. The hybrid pull-up structure delivers the highest peak-source current when it is most needed, during the miller plateau region of the power semiconductor turn-on transient. The $R_{OH}$ in Figure 8-1 represents the on-resistance of the pull-up P-Channel MOSFET. However, the effective pull-up resistance is much smaller than $R_{OH}$. Because the pull-up N-Channel MOSFET has much smaller on-resistance than the P-Channel MOSFET, the pull-up N-Channel MOSFET dominates most of the turn-on transient, until the voltage on OUTH pin is about 3 V below VDD voltage. The effective resistance of the hybrid pull-up structure during this period is about 2 × $R_{OL}$. Then the P-Channel MOSFET pulls up the OUTH voltage to VDD rail. The low pull-up impedance results in strong drive strength during the turn-on transient, which shortens the charging time of the input capacitance of the power semiconductor and reduces the turn on switching loss.

The pull-down structure of the driver stage is implemented solely by a pull-down N-Channel MOSFET. This MOSFET can ensure the OUTL voltage be pulled down to VEE rail. The low pull-down impedance not only results in high sink current to reduce the turn-off time, but also helps to increase the noise immunity considering the miller effect.

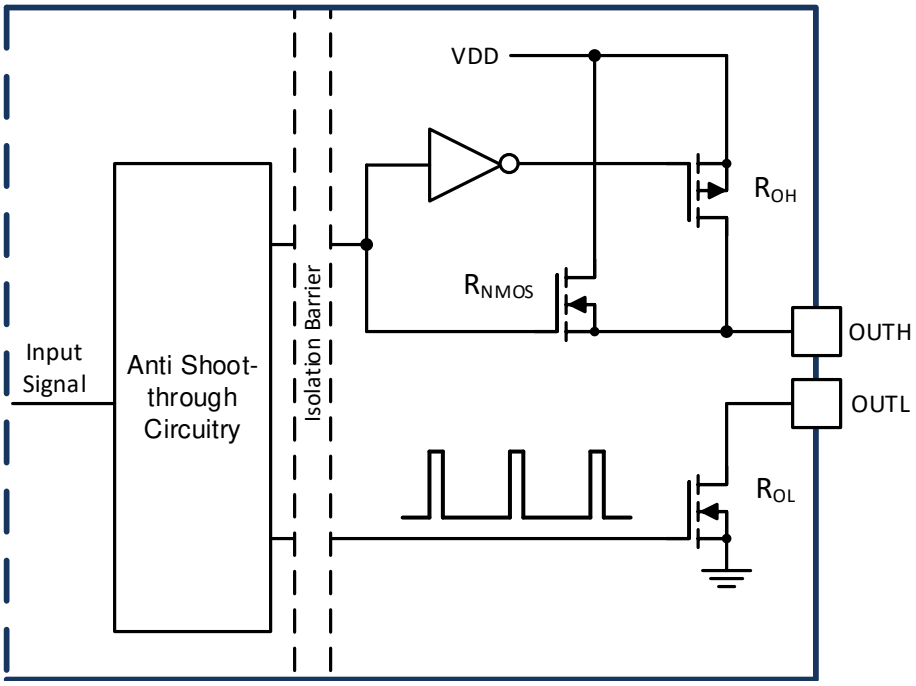


**Figure 8-1. Gate Driver Output Stage**

### 8.3.3 VCC and VDD Undervoltage Lockout (UVLO)

The UCC21750 implements the internal UVLO protection feature for both input and output power supplies VCC and VDD. When the supply voltage is lower than the threshold voltage, the driver output is held as LOW. The output only goes HIGH when both VCC and VDD are out of the UVLO status. The UVLO protection feature not only reduces the power consumption of the driver itself during low power supply voltage condition, but also increases the efficiency of the power stage. For SiC MOSFET and IGBT, the on-resistance reduces while the gate-source voltage or gate-emitter voltage increases. If the power semiconductor is turned on with a low VDD value, the conduction loss increases significantly and can lead to a thermal issue and efficiency reduction of the power stage. The UCC21750 implements a 12-V threshold voltage of VDD UVLO, with 800-mV hysteresis. This threshold voltage is suitable for both SiC MOSFET and IGBT.

The UVLO protection block features with hysteresis and deglitch filter, which help to improve the noise immunity of the power supply. During the turn-on and turn-off switching transient, the driver sources and sinks a peak transient current from the power supply, which can result in sudden voltage drop of the power supply. With

hysteresis and UVLO deglitch filter, the internal UVLO protection block ignores small noises during the normal switching transients.

The timing diagrams of the UVLO feature of VCC and VDD are shown in Figure 7-8, and Figure 7-9. The RDY pin on the input side is used to indicate the power good condition. The RDY pin is open drain. During UVLO condition, the RDY pin is held in low status and connected to GND. Normally the pin is pulled up externally to VCC to indicate the power good. The AIN-APWM function stops working during the UVLO status. The APWM pin on the input side is held LOW.

### 8.3.4 Active Pulldown

The UCC21750 implements an active pulldown feature to ensure the OUTH/OUTL pin clamping to VEE when the VDD is open. The OUTH/OUTL pin is in high-impedance status when VDD is open, the active pulldown feature can prevent the output be false turned on before the device is back to control.

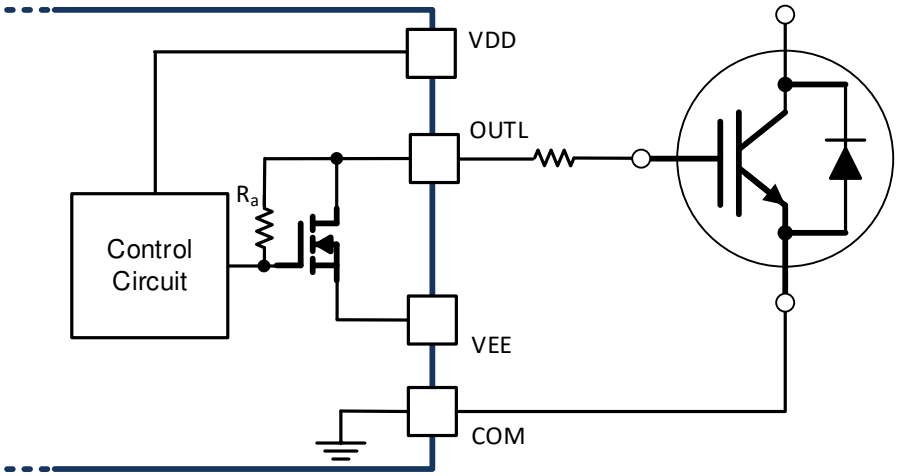


**Figure 8-2. Active Pulldown**

### 8.3.5 Short Circuit Clamping

During short circuit condition, the miller capacitance can cause a current sinking to the OUTH/OUTL/CLMPI pin due to the high dV/dt and boost the OUTH/OUTL/CLMPI voltage. The short circuit clamping feature of the UCC21750 can clamp the OUTH/OUTL/CLMPI pin voltage to be slightly higher than VDD, which can protect the power semiconductors from a gate-source and gate-emitter overvoltage breakdown. This feature is realized by an internal diode from the OUTH/OUTL/CLMPI to VDD.


Copyright © 2023 Texas Instruments Incorporated

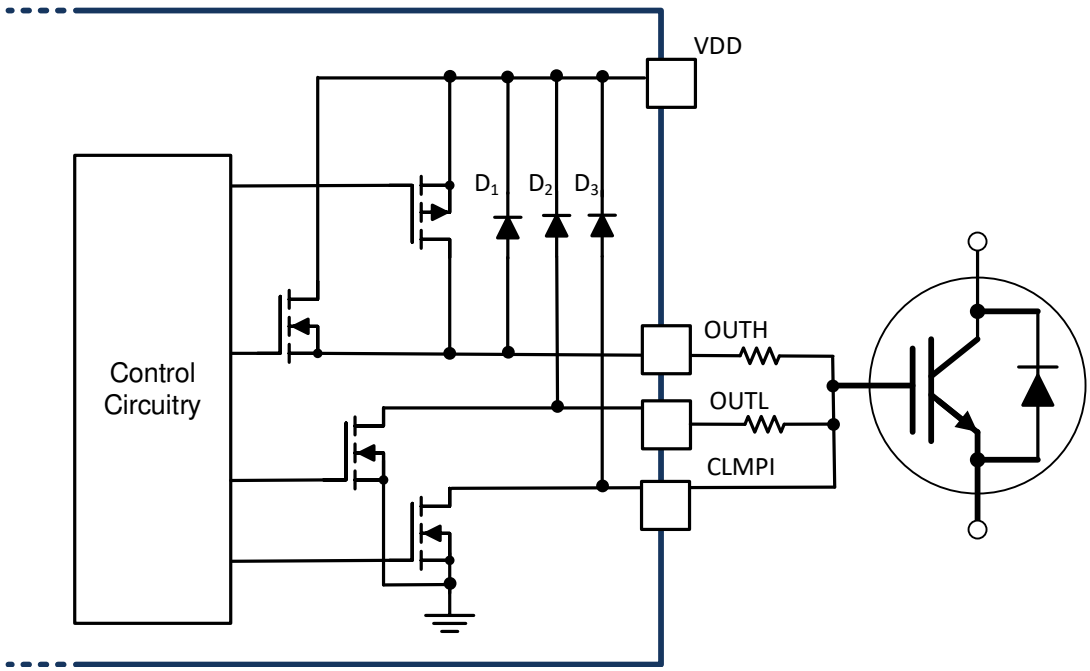


**Figure 8-3. Short Circuit Clamping**

### 8.3.6 Internal Active Miller Clamp

Active miller clamp feature is important to prevent the false turn-on while the driver is in OFF state. In applications which the device can be in synchronous rectifier mode, the body diode conducts the current during the deadtime while the device is in OFF state, the drain-source or collector-emitter voltage remains the same and the dV/dt happens when the other power semiconductor of the phase leg turns on. The low internal pull-down impedance of the UCC21750 can provide a strong pulldown to hold the OUTL to VEE. However, external gate resistance is usually adopted to limit the dV/dt. The miller effect during the turn on transient of the other power semiconductor can cause a voltage drop on the external gate resistor, which boost the gate-source or gate-emitter voltage. If the voltage on $V_{GS}$ or $V_{GE}$ is higher than the threshold voltage of the power semiconductor, a shoot through can happen and cause catastrophic damage. The active miller clamp feature of the UCC21750 drives an internal MOSFET, which connects to the device gate. The MOSFET is triggered when the gate voltage is lower than $V_{CLMPTH}$, which is 2 V above VEE, and creates a low impedance path to avoid the false turn on issue.

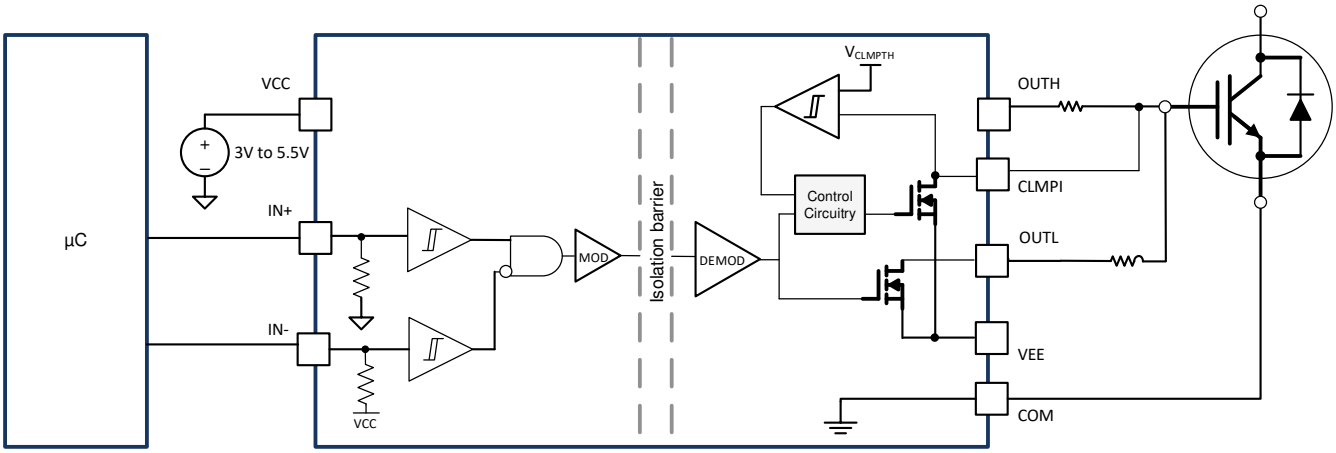


**Figure 8-4. Active Miller Clamp**

### 8.3.7 Desaturation (DESAT) Protection

The UCC21750 implements a fast overcurrent and short circuit protection feature to protect the IGBT module from catastrophic breakdown during fault. The DESAT pin of the device has a typical 9-V threshold with respect to COM, source or emitter of the power semiconductor. When the input is in floating condition, or the output is held in low state, the DESAT pin is pulled down by an internal MOSFET and held in LOW state, which prevents the overcurrent and short circuit fault from false triggering. The internal current source of the DESAT pin is activated only during the driver ON state, which means the overcurrent and short circuit protection feature only works when the power semiconductor is in on state. The internal pulldown MOSFET helps to discharge the voltage of DESAT pin when the power semiconductor is turned off. The UCC21750 features a 200-ns internal leading edge blanking time after the OUTH switches to high state. The internal current source is activated to charge the external blanking capacitor after the internal leading edge blanking time. The typical value of the internal current source is 500 µA.

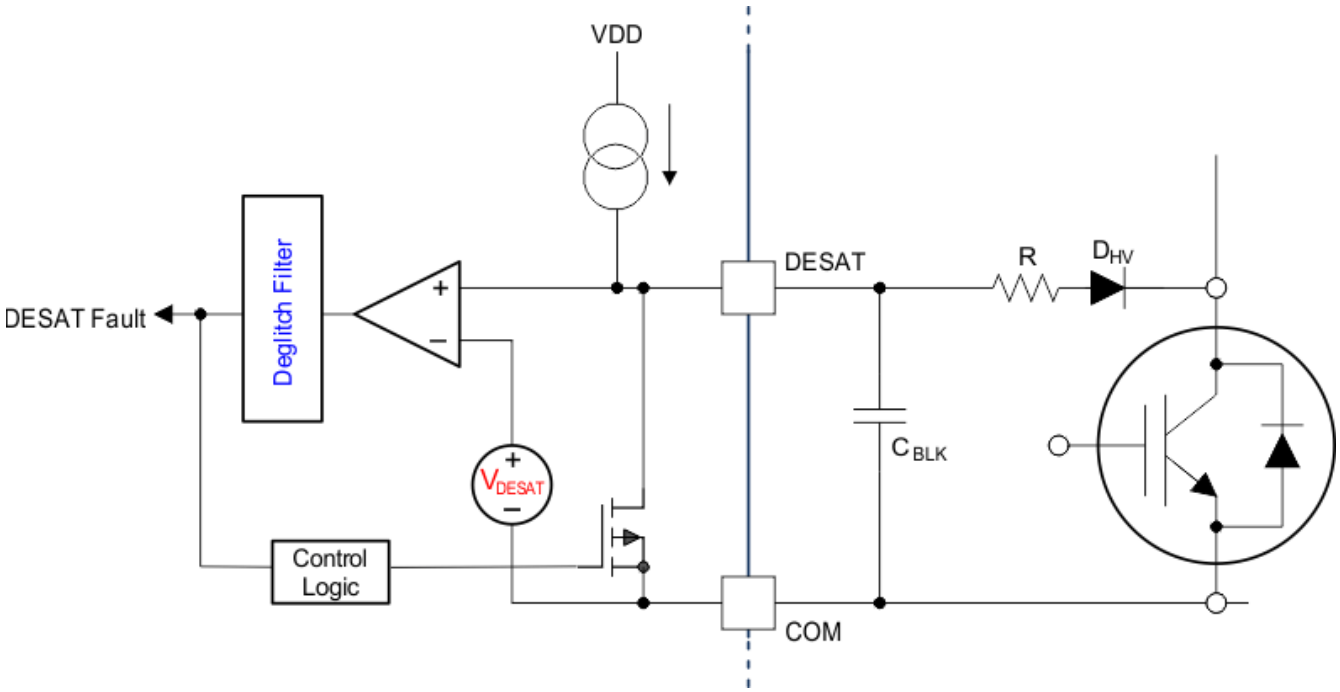


**Figure 8-5. DESAT Protection**

### 8.3.8 Soft Turn-Off

The UCC21750 initiates a soft turn-off when the overcurrent and short circuit protection is triggered. When the overcurrent and short circuit fault happens, the IGBT transits from the active region to the desaturation region very fast. The channel current is controlled by the gate voltage and decreasing in a soft manner, thus the overshoot of the IGBT is limited and prevents the overvoltage breakdown. There is a tradeoff between the overshoot voltage and short circuit energy. The turn off speed must to be slow to limit the overshoot voltage, but the shutdown time must not be too long that the large energy dissipation can breakdown the device. The 400-mA soft turn-off current of the UCC21750 makes sure the power switches is safely turned off during short circuit events. The timing diagram of soft turn-off shows in Figure 7-10.


Copyright © 2023 Texas Instruments Incorporated

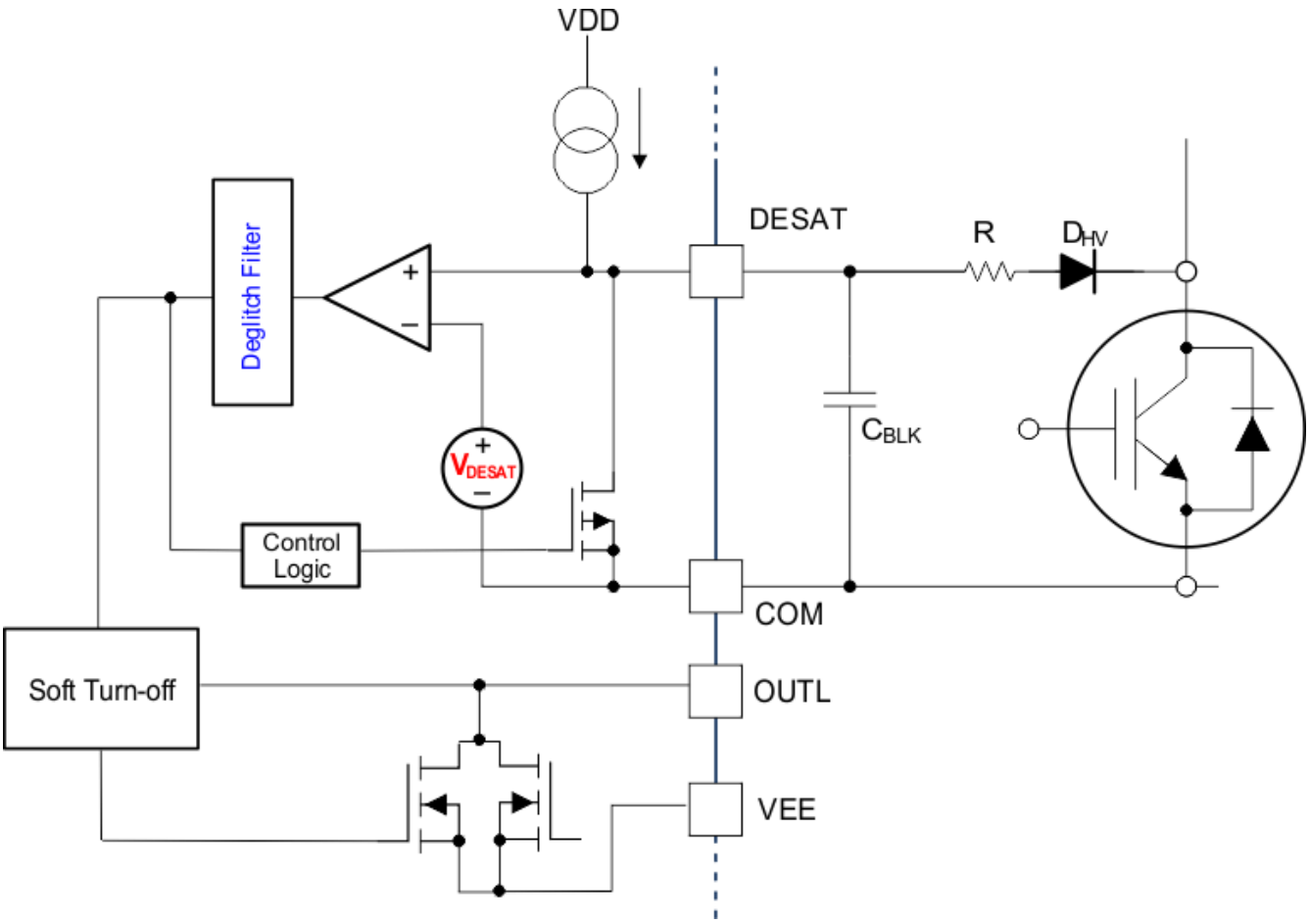


**Figure 8-6. Soft Turn-Off**

### 8.3.9 Fault ($\overline{FLT}$, Reset, and Enable ($\overline{RST}$/EN)

The $\overline{FLT}$ pin of the UCC21750 is open drain and can report a fault signal to the DSP/MCU when the fault is detected through the DESAT pin. The $\overline{FLT}$ pin is pulled down to GND after the fault is detected, and is held low until a reset signal is received from $\overline{RST}$/EN. The device has a fault mute time $t_{FLTMUTE}$, within which the device ignores any reset signal.

The $\overline{RST}$/EN is pulled down internally by a 50-kΩ resistor, and is thus disabled by default when this pin is floating. Pull up externally to enable the driver. The pin has two purposes:

- To reset the $\overline{FLT}$ pin: to reset, then $\overline{RST}$/EN pin is pulled low; if the pin is set and held in low state for more than $t_{RSTFIL}$ after the mute time $t_{FLTMUTE}$, then the fault signal is reset and $\overline{FLT}$ is reset back to the high impedance status at the rising edge of the input signal at $\overline{RST}$/EN pin.
- Enable and shutdown the device: if the $\overline{RST}$/EN pin is pulled low for longer than $t_{RSTFIL}$, the driver disables and OUTL is activated to pull down the gate of the IGBT or SiC MOSFET. The pin must be pulled up externally to enable the part, otherwise the device is disabled by default.

### 8.3.10 Isolated Analog to PWM Signal Function

The UCC21750 features an isolated analog to PWM signal function from AIN to APWM pin, which allows the isolated temperature sensing, high voltage dc bus voltage sensing, and so forth. An internal current source $I_{AIN}$ in AIN pin is implemented in the device to bias an external thermal diode or temperature sensing resistor. The UCC21750 encodes the voltage signal $V_{AIN}$ to a PWM signal, passing through the reinforced isolation barrier, and output to APWM pin on the input side. The PWM signal can either be transferred directly to DSP/MCU to calculate the duty cycle, or filtered by a simple RC filter as an analog signal. The AIN voltage input range is from 0.6 V to 4.5 V, and the corresponding duty cycle of the APWM output ranges from 88% to 10%. The

Copyright © 2023 Texas Instruments Incorporated

duty cycle increases linearly from 10% to 88% while the AIN voltage decreases from 4.5 V to 0.6 V. This action corresponds to the temperature coefficient of the negative temperature coefficient (NTC) resistor and thermal diode. When AIN is floating, the AIN voltage is 5 V and the APWM operates at 400 kHz with approximately 10% duty cycle. The accuracy of the duty cycle is ±3% across temperature without one time calibration. The accuracy can be improved using calibration. The accuracy of the internal current source $I_{AIN}$ is ±3% across temperature.

The isolated analog to PWM signal feature can also support other analog signal sensing, such as the high voltage dc bus voltage, and so forth. The internal current source $I_{AIN}$ must be taken into account when designing the potential divider if sensing a high voltage.

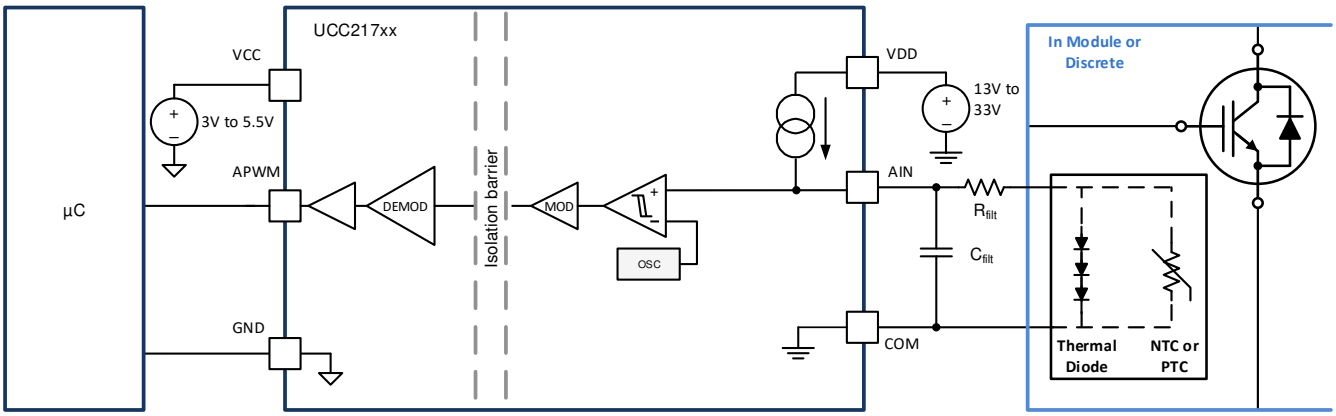


**Figure 8-7. Isolated Analog to PWM Signal**

## 8.4 Device Functional Modes

The Table 8-1 lists the device function.

**Table 8-1. Function Table**

| INPUT | | | | | | | OUTPUT | | | | |
|---|---|---|---|---|---|---|---|---|---|---|---|
| VCC | VDD | VEE | IN+ | IN- | $\overline{RST}$/EN | AIN | RDY | $\overline{FLT}$ | OUTH/ OUTL | CLMPI | APWM |
| PU | PD | PU | X | X | X | X | Low | HiZ | Low | Low | Low |
| PD | PU | PU | X | X | X | X | Low | HiZ | Low | Low | Low |
| PU | PU | PU | X | X | Low | X | HiZ | HiZ | Low | Low | Low |
| PU | Open | PU | X | X | X | X | Low | HiZ | HiZ | HiZ | HiZ |
| PU | PU | Open | X | X | X | X | Low | HiZ | Low | Low | Low |
| PU | PU | PU | Low | X | High | X | HiZ | HiZ | Low | Low | P* |
| PU | PU | PU | X | High | High | X | HiZ | HiZ | Low | Low | P* |
| PU | PU | PU | High | High | High | X | HiZ | HiZ | Low | Low | P* |
| PU | PU | PU | High | Low | High | X | HiZ | HiZ | High | HiZ | P* |

PU: Power Up (VCC ≥ 2.85 V, VDD ≥ 13.1 V, VEE ≤ 0 V); PD: Power Down (VCC ≤ 2.35 V, VDD ≤ 9.9 V); X: Irrelevant; P*: PWM Pulse; HiZ: High Impedance


Copyright © 2023 Texas Instruments Incorporated

# 9 Applications and Implementation

**Note**

Information in the following applications sections is not part of the TI component specification, and TI does not warrant its accuracy or completeness. TI's customers are responsible for determining suitability of components for their purposes, as well as validating and testing their design implementation to confirm system functionality.

## 9.1 Application Information

The UCC21750 device is very versatile because of the strong drive strength, wide range of output power supply, high isolation ratings, high CMTI and superior protection and sensing features. The 1.5-kVRMS working voltage and 12.8-kVPK surge immunity can support up both SiC MOSFET and IGBT modules with DC bus voltage up to 2121 V. The device can be used in both low power and high power applications such as the traction inverter in HEV/EV, on-board charger and charging pile, motor driver, solar inverter, industrial power supplies and so forth. The device can drive the high power SiC MOSFET module, IGBT module or paralleled discrete device directly without external buffer drive circuit based on NPN/PNP bipolar transistor in totem-pole structure, which allows the driver to have more control to the power semiconductor and saves the cost and space of the board design. The UCC21750 can also be used to drive very high power modules or paralleled modules with external buffer stage. The input side can support power supply and microcontroller signal from 3.3 V to 5 V, and the device level shifts the signal to output side through reinforced isolation barrier. The device has wide output power supply range from 13 V to 33 V and support wide range of negative power supply. This feature allows the driver to be used in SiC MOSFET applications, IGBT application and many others. The 12-V UVLO benefits the power semiconductor with lower conduction loss and improves the system efficiency. As a reinforced isolated single channel driver, the device can be used to drive either a low-side or high-side driver.

The UCC21750 device features extensive protection and monitoring features, which can monitor, report and protect the system from various fault conditions.

- Fast detection and protection for the overcurrent and short circuit fault. The semiconductor is shutdown when the fault is detected and $\overline{\text{FLT}}$ pin is pulled down to indicate the fault detection. The device is latched unless reset signal is received from the $\overline{\text{RST}}$/EN pin.
- Soft turn-off feature to protect the power semiconductor from catastrophic breakdown during overcurrent and short circuit fault. The shutdown energy can be controlled while the overshoot of the power semiconductor is limited.
- UVLO detection to protect the semiconductor from excessive conduction loss. After the device is detected to be in UVLO mode, the output is pulled down and RDY pin indicates the power supply is lost. The device is back to normal operation mode after the power supply is out of the UVLO status. The power good status can be monitored from the RDY pin.
- Analog signal sensing with isolated analog to PWM signal feature. This feature allows the device to sense the temperature of the semiconductor from the thermal diode or temperature sensing resistor, or dc bus voltage with resistor divider. A PWM signal is generated on the low voltage side with reinforced isolated from the high voltage side. The signal can be fed back to the microcontroller for the temperature monitoring, voltage monitoring and so forth.
- The active miller clamp feature protects the power semiconductor from false turn on.
- Enable and disable function through the $\overline{\text{RST}}$/EN pin.
- Short circuit clamping.
- Active pulldown.

## 9.2 Typical Application

Figure 9-1 shows the typical application of a half bridge using two UCC21750 isolated gate drivers. The half bridge is a basic element in various power electronics applications such as in motor drive applications to control the operating speed and torque of an AC motor.

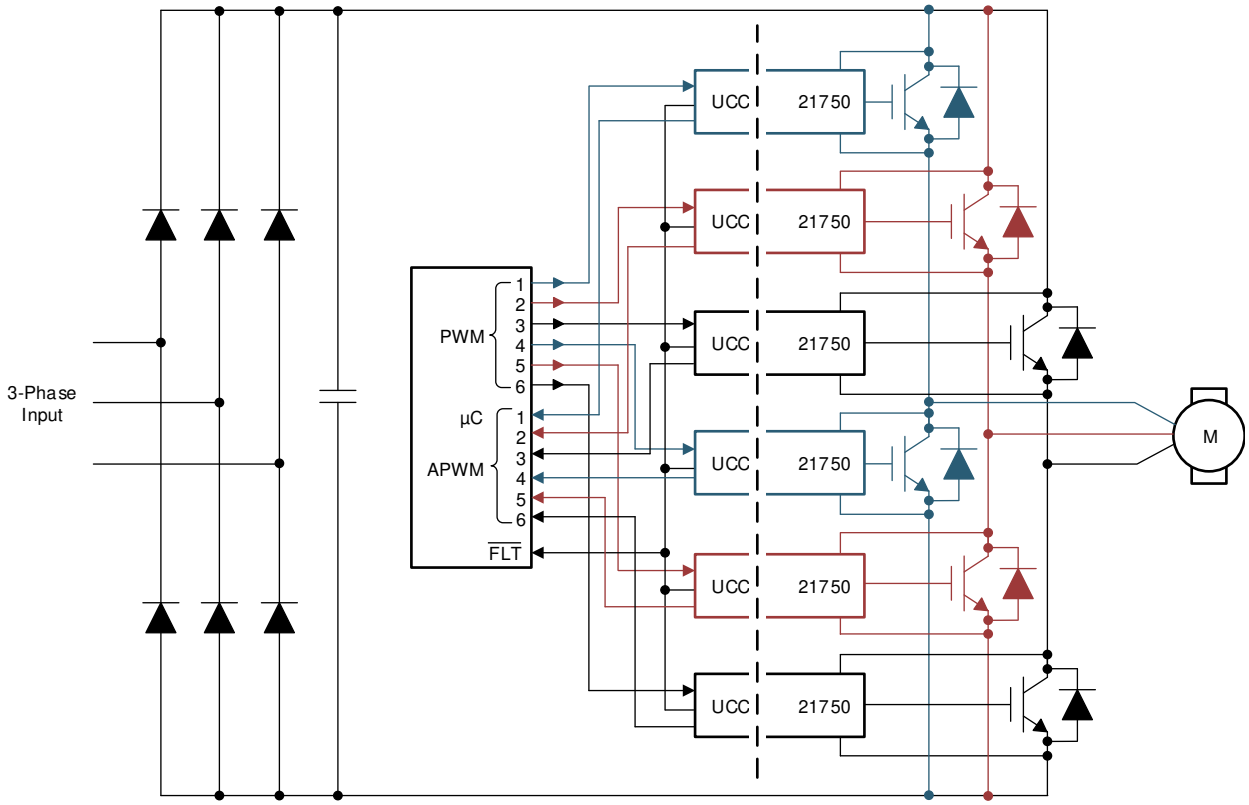


**Figure 9-1. Typical Application Schematic**

### 9.2.1 Design Requirements

The design of the power system for end equipment must consider some design requirements to ensure the reliable operation of the UCC21750 through the load range. The design considerations include the peak source and sink current, power dissipation, overcurrent and short circuit protection, AIN-APWM function for analog signal sensing and so forth.

A design example for a half bridge based on IGBT is given in this subsection. Table 9-1 shows the design parameters.

**Table 9-1. Design Parameters**

| PARAMETER | VALUE |
|---|---|
| Input supply voltage | 5 V |
| IN-OUT configuration | Non-inverting |
| Positive output voltage VDD | 15 V |
| Negative output voltage VEE | –5 V |
| DC bus voltage | 800 V |
| Peak drain current | 300 A |
| Switching frequency | 50 kHz |
| Switch type | IGBT module |

### 9.2.2 Detailed Design Procedure

#### *9.2.2.1 Input Filters for IN+, IN–, and $\overline{RST}$/EN*

In the applications of traction inverter or motor drive, the power semiconductors are in hard switching mode. With the strong drive strength of the UCC21750, the dV/dt can be high, especially for SiC MOSFET. Noise cannot only be coupled to the gate voltage due to the parasitic inductance, but also to the input side as the non-ideal PCB layout and coupled capacitance.


Copyright © 2023 Texas Instruments Incorporated

The UCC21750 features a 40-ns internal deglitch filter to IN+, IN– and $\overline{\text{RST}}$/EN pin. Any signal less than 40 ns can be filtered out from the input pins. For noisy systems, external low-pass filter can be added externally to the input pins. Adding low-pass filters to IN+, IN– and $\overline{\text{RST}}$/EN pins can effectively increase the noise immunity and increase the signal integrity. When not in use, the IN+, IN– and $\overline{\text{RST}}$/EN pins must not be floating. IN– must be tied to GND if only IN+ is used for non-inverting input to output configuration. The purpose of the low-pass filter is to filter out the high frequency noise generated by the layout parasitics. While choosing the low-pass filter resistors and capacitors, both the noise immunity effect and delay time must be considered according to the system requirements.

#### *9.2.2.2 PWM Interlock of IN+ and IN–*

The UCC21750 features the PWM interlock for IN+ and IN– pins, which can be used to prevent the phase leg shoot through issue. As shown in Table 8-1, the output is logic low while both IN+ and IN– are logic high. When only IN+ is used, IN– can be tied to GND. To use the PWM interlock function, the PWM signal of the other switch in the phase leg can be sent to the IN– pin. As shown in Figure 9-2, the PWM_T is the PWM signal to top side switch, the PWM_B is the PWM signal to bottom side switch. For the top side gate driver, the PWM_T signal is given to the IN+ pin, while the PWM_B signal is given to the IN- pin; for the bottom side gate driver, the PWM_B signal is given to the IN+ pin, while PWM_T signal is given to the IN- pin. When both PWM_T and PWM_B signals are high, the outputs of both gate drivers are logic low to prevent the shoot through condition.

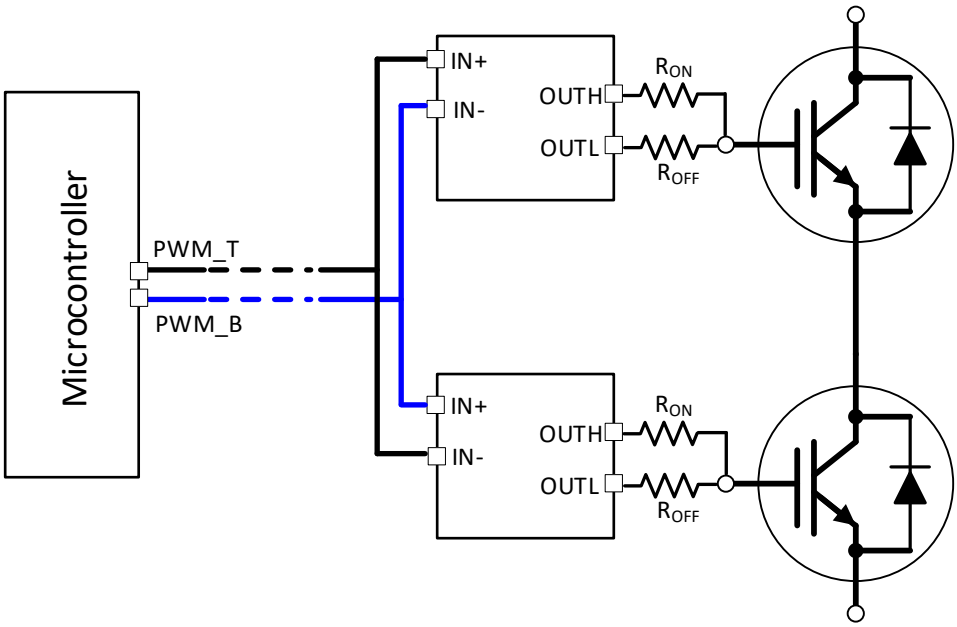


**Figure 9-2. PWM Interlock for a Half Bridge**

#### *9.2.2.3 $\overline{\text{FLT}}$, RDY, and $\overline{\text{RST}}$/EN Pin Circuitry*

Both $\overline{\text{FLT}}$ and RDY pin are open-drain output. The $\overline{\text{RST}}$/EN pin has a 50-kΩ internal pulldown resistor, so the driver is in OFF status if the $\overline{\text{RST}}$/EN pin is not pulled up externally. A 5 kΩ resistor can be used as pullup resistor for the $\overline{\text{FLT}}$, RDY and $\overline{\text{RST}}$/EN pins.

To improve the noise immunity due to the parasitic coupling and common mode noise, low pass filters can be added between the $\overline{\text{FLT}}$, RDY and $\overline{\text{RST}}$/EN pins and the microcontroller. A filter capacitor between 100 pF to 300 pF can be added.

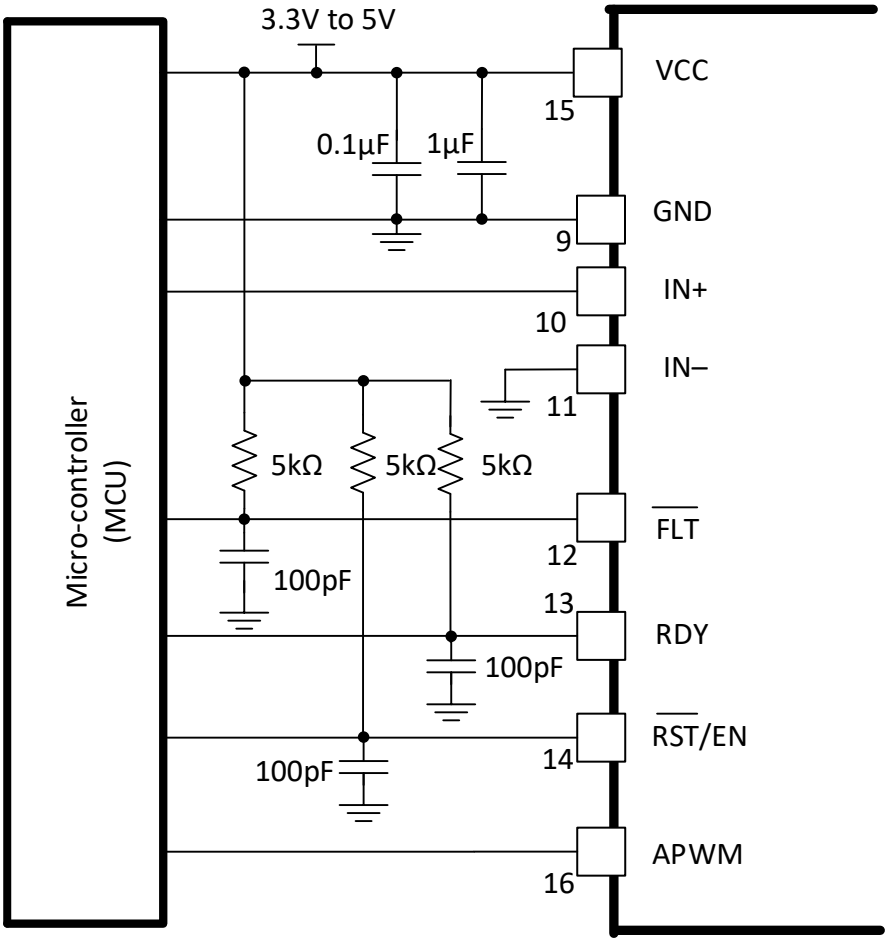


**Figure 9-3. $\overline{\text{FLT}}$, RDY, and $\overline{\text{RST}}$/EN Pins Circuitry**

#### *9.2.2.4 $\overline{\text{RST}}$/EN Pin Control*

The $\overline{\text{RST}}$/EN pin has two functions. The pin is used to enable or shutdown the outputs of the driver and to reset the fault signaled on the $\overline{\text{FLT}}$ pin after DESAT is detected. $\overline{\text{RST}}$/EN pin must to be pulled up to enable the device; when the pin is pulled down, the device is in disabled status. By default the driver is disabled with the internal 50kΩ pulldown resistor at this pin.

When the driver is latched after DESAT is detected, the $\overline{\text{FLT}}$ pin and output are latched low and must be reset by the $\overline{\text{RST}}$/EN pin. The microcontroller must send a signal to $\overline{\text{RST}}$/EN pin after the fault to reset the driver. The driver does not respond until after the mute time $t_{FLTMUTE}$. The reset signal must be held low for at least $t_{RSTFIL}$ after the mute time.

This pin can also be used to automatically reset the driver. The continuous input signal IN+ or IN- can be applied to $\overline{\text{RST}}$/EN pin. There is no separate reset signal from the microcontroller when configuring the driver this way. If the PWM is applied to the non-inverting input IN+, then IN+ can also be tied to $\overline{\text{RST}}$/EN pin. If the PWM is applied to the inverting input IN–, then a NOT logic is needed between the PWM signal from the microcontroller and the $\overline{\text{RST}}$/EN pin. Using either configuration results in the driver being reset in every switching cycle without an extra control signal from microcontroller tied to $\overline{\text{RST}}$/EN pin. One must ensure the PWM off-time is greater than $t_{RSTFIL}$ in order to reset the driver in cause of a DESAT fault.


Copyright © 2023 Texas Instruments Incorporated

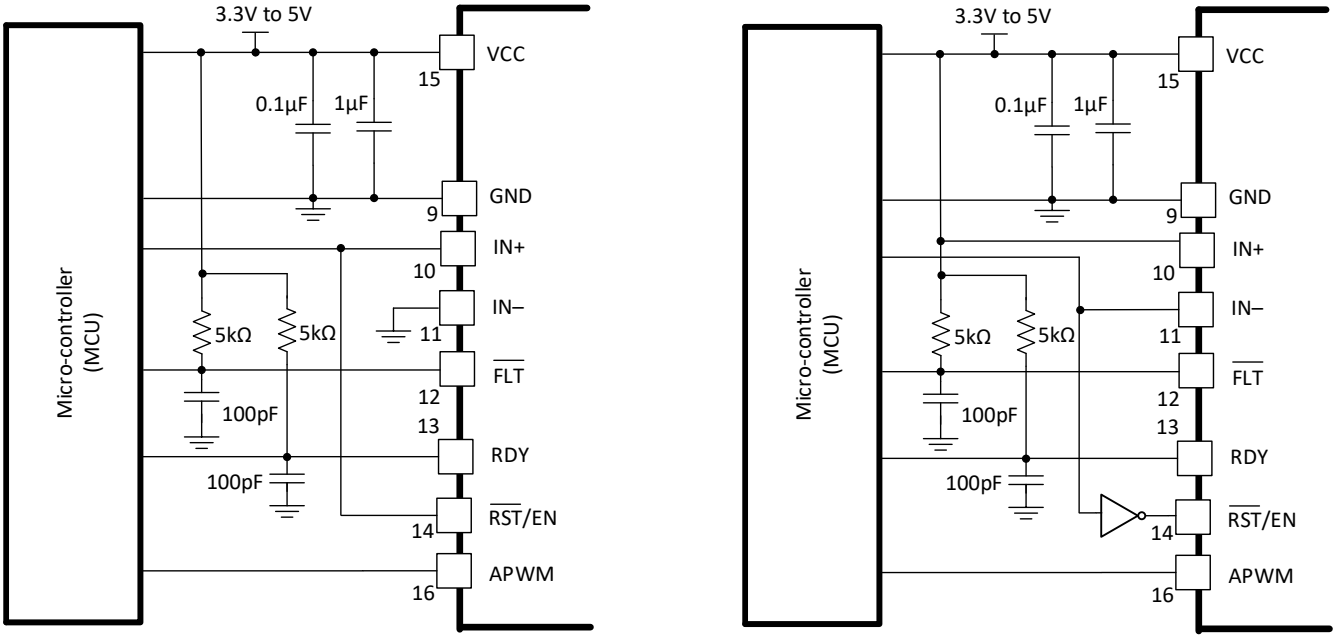


**Figure 9-4. Automatic Reset Control**

### *9.2.2.5 Turn-On and Turn-Off Gate Resistors*

The UCC21750 features split outputs OUTH and OUTL, which enables the independent control of the turn on and turn off switching speed. The turn on and turn off resistance determine the peak source and sink current, which controls the switching speed in turn. Meanwhile, the power dissipation in the gate driver must be considered to ensure the device is in the thermal limit. At first, the peak source and sink current are calculated as:

$$I_{source_pk} = \min(10A, \frac{VDD - VEE}{R_{OH_EFF} + R_{ON} + R_{G_Int}})$$

$$I_{sink_pk} = \min(10A, \frac{VDD - VEE}{R_{OL} + R_{OFF} + R_{G_Int}}) \quad (1)$$

Where

- $R_{OH_EFF}$ is the effective internal pull up resistance of the hybrid pull-up structure, shown in Figure 8-1, which is approximately 2 × $R_{OL}$, about 0.7 Ω. This is the dominant resistance during the switching transient of the pull up structure.
- $R_{OL}$ is the internal pulldown resistance, about 0.3 Ω.
- $R_{ON}$ is the external turn on gate resistance.
- $R_{OFF}$ is the external turn off gate resistance.
- $R_{G_Int}$ is the internal resistance of the SiC MOSFET or IGBT module.

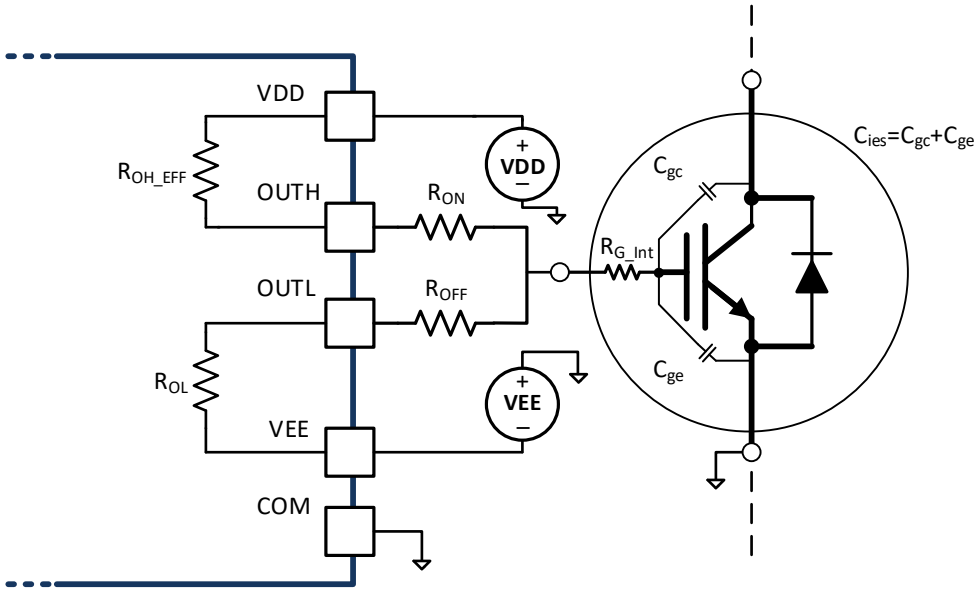


**Figure 9-5. Output Model for Calculating Peak Gate Current**

For example, for an IGBT module based system with the following parameters:

- $Q_g$ = 3300 nC
- $R_{G_Int}$ = 1.7 Ω
- $R_{ON} = R_{OFF}$ = 1 Ω

The peak source and sink current in this case are:

$$I_{source_pk} = \min(10A, \frac{VDD - VEE}{R_{OH_EFF} + R_{ON} + R_{G_Int}}) \approx 5.9A$$
$$I_{sink_pk} = \min(10A, \frac{VDD - VEE}{R_{OL} + R_{OFF} + R_{G_Int}}) \approx 6.7A \quad (2)$$

Thus, by using a 1-Ω external gate resistance, the peak source current is 5.9 A, the peak sink current is 6.7 A. The collector-to-emitter dV/dt during the turn on switching transient is dominated by the gate current at the miller plateau voltage. The hybrid pullup structure ensures the peak source current at the miller plateau voltage, unless the turn on gate resistor is too high. The faster the collector-to-emitter, $V_{ce}$, voltage rises to $V_{DC}$, the smaller the turn on switching loss is. The dV/dt can be estimated as $Q_{gc}/I_{source_pk}$. For the turn off switching transient, the drain-to-source dV/dt is dominated by the load current, unless the turn off gate resistor is too high. After $V_{ce}$ reaches the dc bus voltage, the power semiconductor is in saturation mode and the channel current is controlled by $V_{ge}$. The peak sink current determines the dI/dt, which dominates the $V_{ce}$ voltage overshoot accordingly. If using relatively large turn off gate resistance, the $V_{ce}$ overshoot can be limited. The overshoot can be estimated by:

$$\Delta V_{ce} = L_{stray} \cdot I_{load} / ((R_{OFF} + R_{OL} + R_{G_Int}) \cdot C_{ies} \cdot \ln(V_{plat} / V_{th})) \quad (3)$$

Where

- $L_{stray}$ is the stray inductance in power switching loop, as shown in Figure 9-6
- $I_{load}$ is the load current, which is the turn off current of the power semiconductor
- $C_{ies}$ is the input capacitance of the power semiconductor
- $V_{plat}$ is the plateau voltage of the power semiconductor
- $V_{th}$ is the threshold voltage of the power semiconductor


Copyright © 2023 Texas Instruments Incorporated

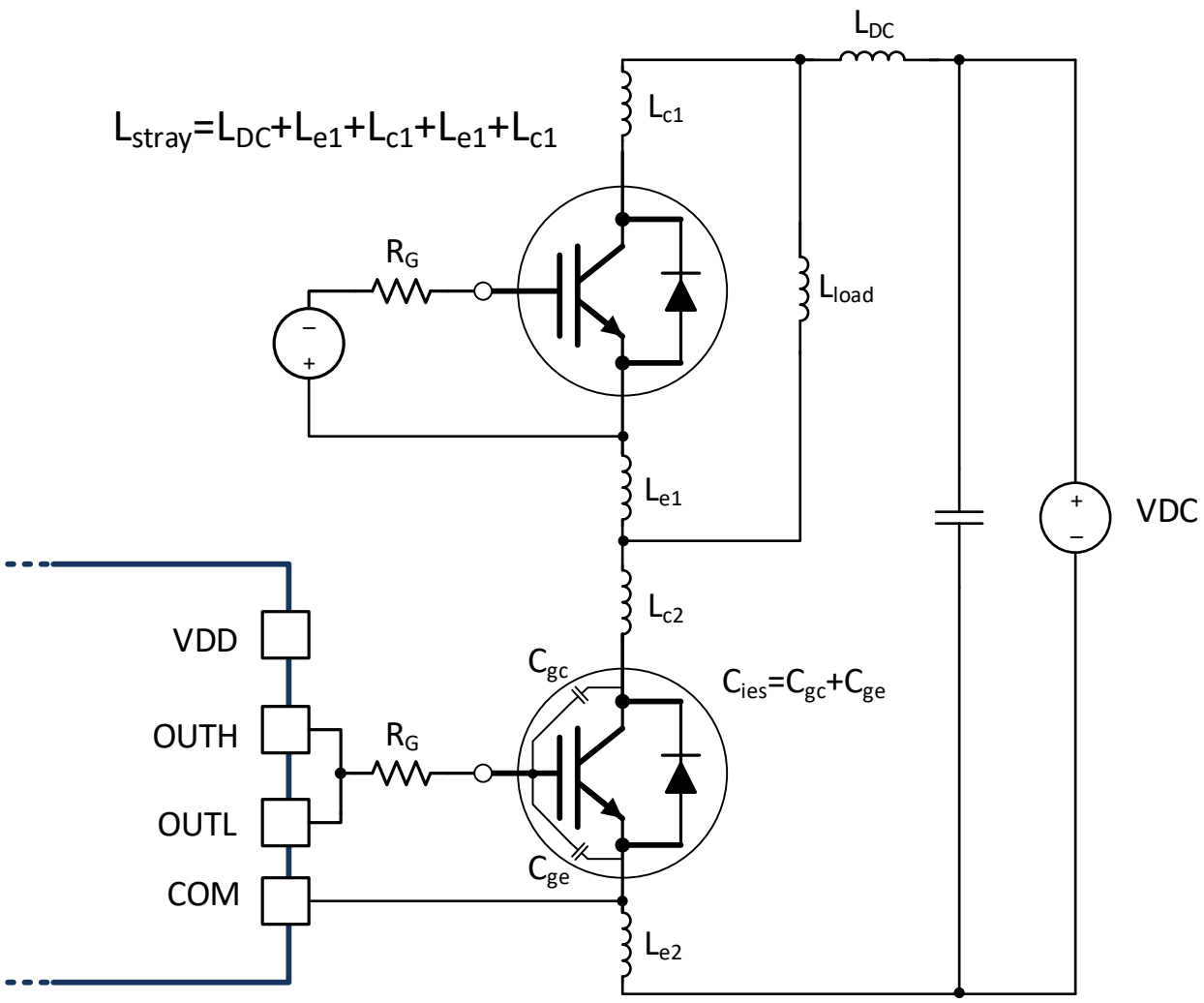


**Figure 9-6. Stray Parasitic Inductance of IGBTs in a Half-Bridge Configuration**

The power dissipation must be taken into account to maintain the gate driver within the thermal limit. The power loss of the gate driver includes the quiescent loss and the switching loss, which can be calculated as:

$$P_{DR} = P_Q + P_{SW} \tag{4}$$

$P_Q$ is the quiescent power loss for the driver, which is $I_q$ x (VDD-VEE) = 5 mA × 20 V = 0.100 W. The quiescent power loss is the power consumed by the internal circuits such as the input stage, reference voltage, logic circuits, protection circuits when the driver is switching when the driver is biased with VDD and VEE, and also the charging and discharing current of the internal circuit when the driver is switching. The power dissipation when the driver is switching can be calculated as:

$$P_{SW} = \frac{1}{2} \cdot \left( \frac{R_{OH_EFF}}{R_{OH_EFF} + R_{ON} + R_{G_Int}} + \frac{R_{OL}}{R_{OL} + R_{OFF} + R_{G_Int}} \right) \cdot (VDD - VEE) \cdot f_{sw} \cdot Q_g \tag{5}$$

Where

- $Q_g$ is the gate charge required at the operation point to fully charge the gate voltage from VEE to VDD
- $f_{sw}$ is the switching frequency

In this example, the $P_{SW}$ can be calculated as:

$$P_{SW} = \frac{1}{2} \cdot \left( \frac{R_{OH_EFF}}{R_{OH_EFF} + R_{ON} + R_{G_Int}} + \frac{R_{OL}}{R_{OL} + R_{OFF} + R_{G_Int}} \right) \cdot (VDD - VEE) \cdot f_{sw} \cdot Q_g = 0.505W \quad (6)$$

Thus, the total power loss is:

$$P_{DR} = P_Q + P_{SW} = 0.10W + 0.505W = 0.605W \quad (7)$$

When the board temperature is 125°C, the junction temperature can be estimated as:

$$T_j = T_b + \psi_{jb} \cdot P_{DR} \approx 150°C \quad (8)$$

Therefore, for the application in this example, with 125°C board temperature, the maximum switching frequency is approximately 50 kHz to keep the gate driver in the thermal limit. By using a lower switching frequency, or increasing external gate resistance, the gate driver can be operated at a higher switching frequency.

#### *9.2.2.6 Overcurrent and Short Circuit Protection*

A standard desaturation circuit can be applied to the DESAT pin. If the voltage of the DESAT pin is higher than the threshold $V_{DESAT}$, the soft turn-off is initiated. A fault is reported to the input side to DSP/MCU. The output is held to LOW after the fault is detected, and can only be reset by the $\overline{RST}$/EN pin. The state-of-art overcurrent and short circuit detection time helps to ensure a short shutdown time for SiC MOSFET and IGBT.

If DESAT pin is not in use, it must be tied to COM to avoid overcurrent fault false triggering.

- TI recommends fast reverse recovery high voltage diode in the desaturation circuit. A resistor is recommended in series with the high voltage diode to limit the inrush current.
- Ti recommends a Schottky diode from COM to DESAT to prevent driver damage caused by negative voltage.
- TI recommends a Zener diode from COM to DESAT to prevent driver damage caused by positive voltage.

#### *9.2.2.7 Isolated Analog Signal Sensing*

The isolated analog signal sensing feature provides a simple isolated channel for the isolated temperature detection, voltage sensing and so forth. One typical application of this function is the temperature monitor of the power semiconductor. Thermal diodes or temperature sensing resistors are integrated in the SiC MOSFET or IGBT module close to the dies to monitor the junction temperature. The UCC21750 has an internal 200-uA current source with ±3% accuracy across temperature, which can forward bias the thermal diodes or create a voltage drop on the temperature sensing resistors. The sensed voltage from the AIN pin is passed through the isolation barrier to the input side and transformed to a PWM signal. The duty cycle of the PWM changes linearly from 10% to 88% when the AIN voltage changes from 4.5 V to 0.6 V and can be represented using Equation 9.

$$D_{APWM}(\%) = -20 * V_{AIN} + 100 \quad (9)$$

##### 9.2.2.7.1 Isolated Temperature Sensing

A typical application circuit is shown in Figure 9-7. To sense temperature, the AIN pin is connected to the thermal diode or thermistor which can be discrete or integrated within the power module. TI recommends a low pass filter for the AIN input. Because the temperature signal does not have a high bandwidth, the low pass filter is mainly used for filtering the noise introduced by the switching of the power device, which does not require stringent control for propagation delay. The filter capacitance for $C_{filt}$ can be chosen between 1 nF to 100 nF and the filter resistance $R_{filt}$ between 1 Ω to 10 Ω according to the noise level.

The output of APWM is directly connected to the microcontroller to measure the duty cycle dependent on the voltage input at AIN, using Equation 9.


Copyright © 2023 Texas Instruments Incorporated

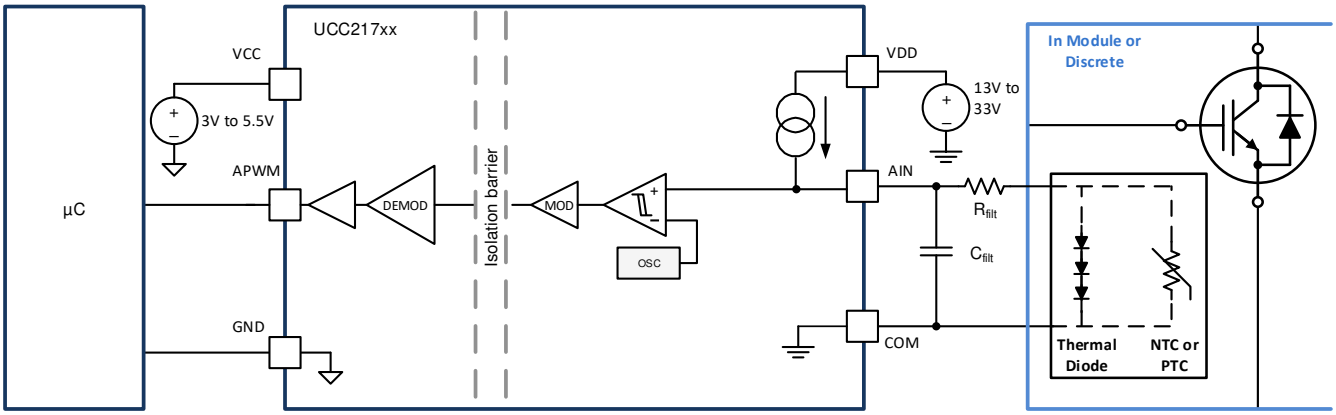


**Figure 9-7. Thermal Diode or Thermistor Temperature Sensing Configuration**

When a high-precision voltage supply for VCC is used on the primary side of UCC21750 the duty cycle output of APWM can also be filtered and the voltage measured using the microcontroller's ADC input pin, as shown in Figure 9-8. The frequency of APWM is 400 kHz, so the value for $R_{filt_2}$ and $C_{filt_2}$ must be such that the cutoff frequency is below 400 kHz. Temperature does not change rapidly, thus the rise time due to the RC constant of the filter is not under a strict requirement.

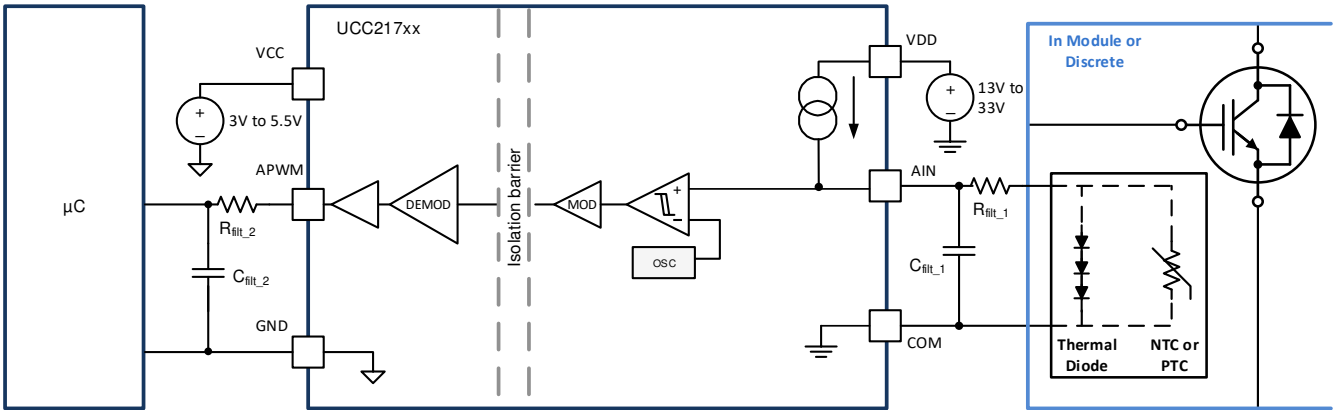


**Figure 9-8. APWM Channel with Filtered Output**

The example below shows the results using a 4.7-kΩ NTC, NTCS0805E3472FMT, in series with a 3-kΩ resistor and also the thermal diode using four diode-connected MMBT3904 NPN transistors. The sensed voltage of the 4 MMBT3904 thermal diodes connected in series ranges from about 2.5 V to 1.6 V from 25°C to 135°C, corresponding to 50% to 68% duty cycle. The sensed voltage of the NTC thermistor connected in series with the 3-kΩ resistor ranges from about 1.5 V to 0.6 V from 25°C to 135°C, corresponding to 70% to 88% duty cycle. The voltage at VAIN of both sensors and the corresponding measured duty cycle at APWM is shown in Figure 9-9.

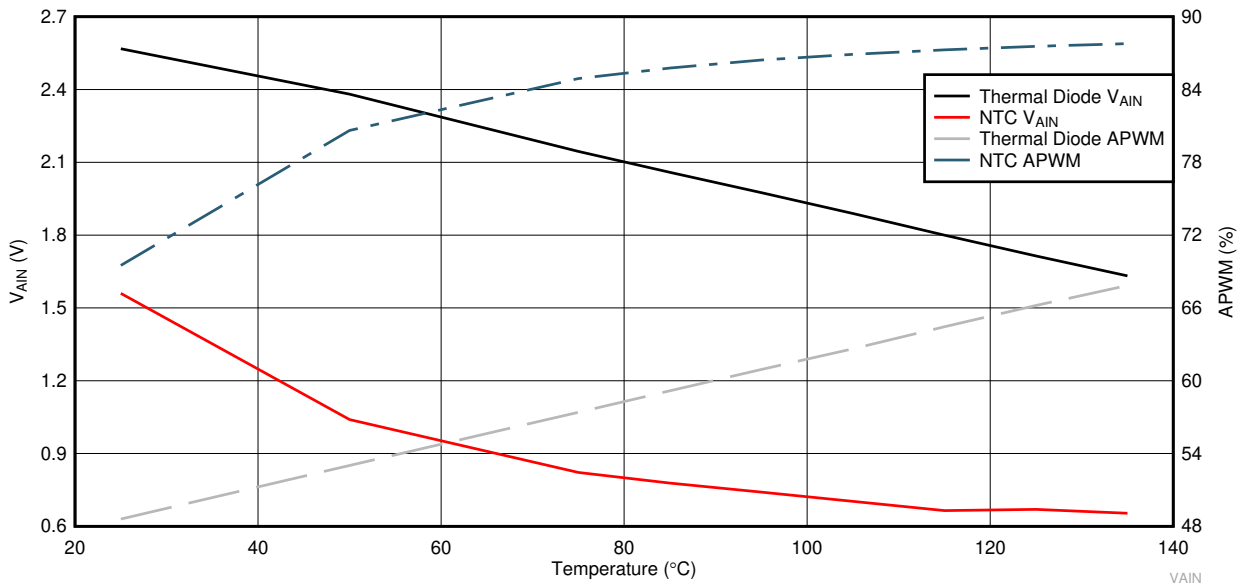


**Figure 9-9. Thermal Diode and NTC $V_{AIN}$ and Corresponding Duty Cycle at APWM**

The duty cycle output has an accuracy of ±3% throughout temperature without any calibration, as shown in Figure 9-10 but with single-point calibration at 25°C, the duty accuracy can be improved to ±1%, as shown in Figure 9-11.

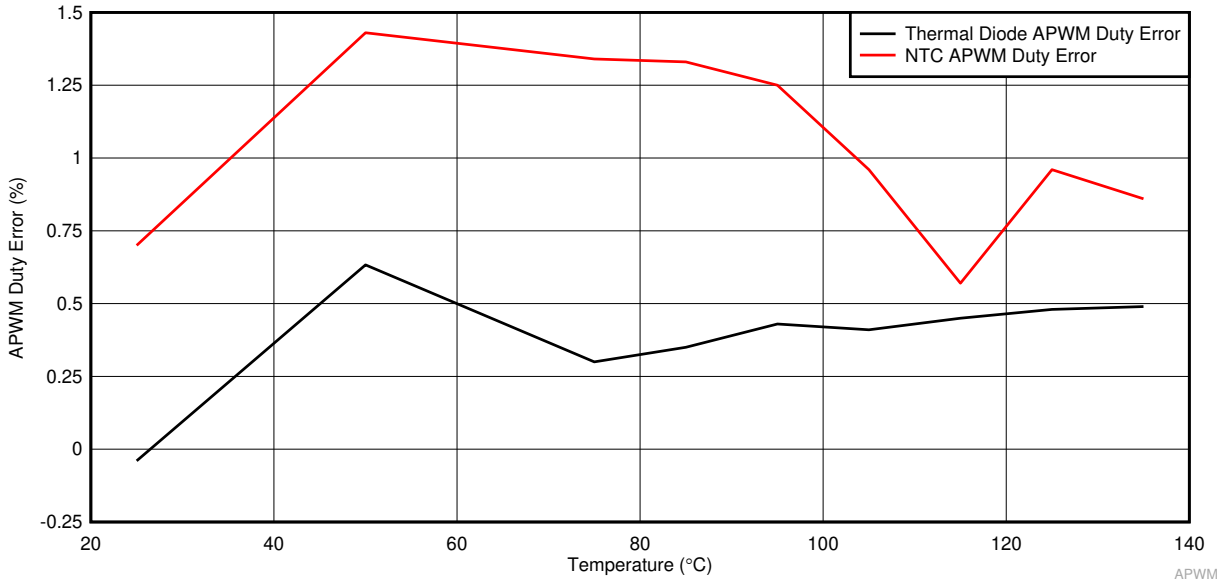


**Figure 9-10. APWM Duty Error Without Calibration**


Copyright © 2023 Texas Instruments Incorporated

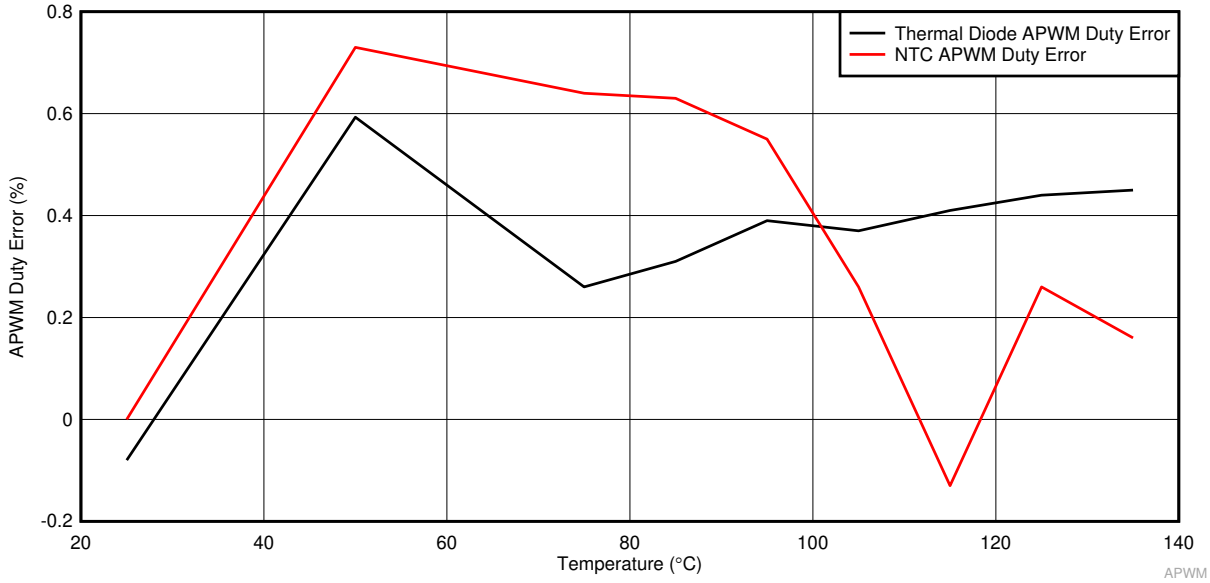


**Figure 9-11. APWM Duty Error With Single-Point Calibration**

#### 9.2.2.7.2 Isolated DC Bus Voltage Sensing

The AIN to APWM channel can be used for other applications such as the DC-link voltage sensing, as shown in Figure 9-12. The same filtering requirements as given above can be used in this case, as well. The number of attenuation resistors, $R_{atten_1}$ through $R_{atten_n}$, is dependent on the voltage level and power rating of the resistor. The voltage is finally measured across $R_{LV_DC}$ to monitor the stepped-down voltage of the HV DC-link which must fall within the voltage range of AIN from 0.6 V to 4.5 V. The driver must be referenced to the same point as the measurement reference, thus in the case shown below the UCC21750 is driving the lower IGBT in the half-bridge and the DC-link voltage measurement is referenced to COM. The internal current source $I_{AIN}$ must be taken into account when designing the resistor divider. The AIN pin voltage is:

$$V_{AIN} = \frac{R_{LV_DC}}{R_{LV_DC} + \sum_{i=1}^{n} R_{atten_i}} \cdot V_{DC} + R_{LV_DC} \cdot I_{AIN} \tag{10}$$

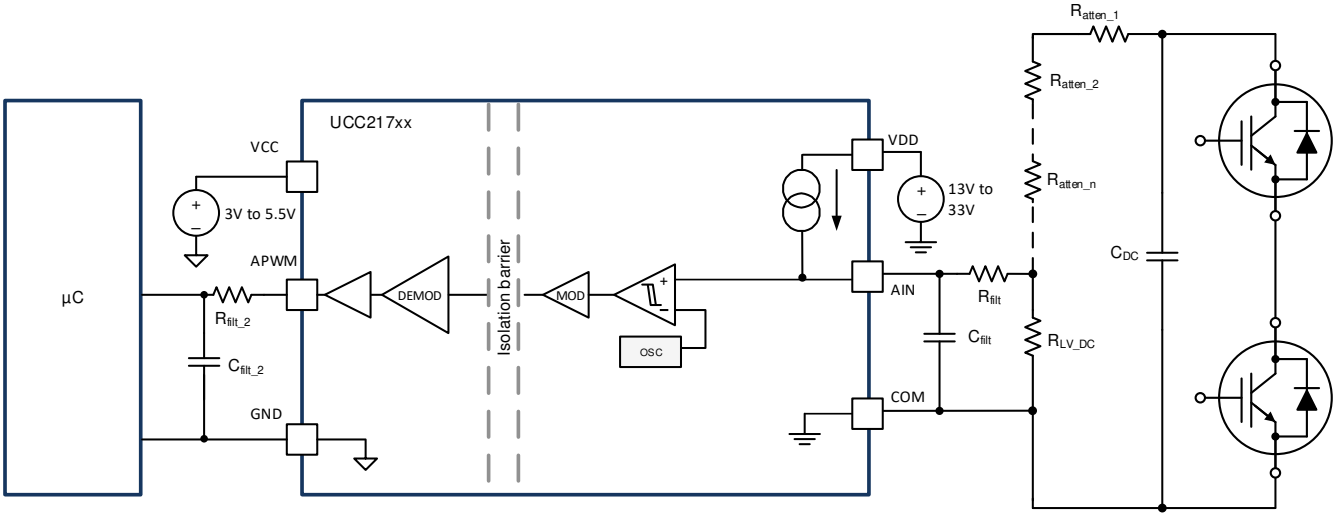


**Figure 9-12. DC-link Voltage Sensing Configuration**

#### *9.2.2.8 Higher Output Current Using an External Current Buffer*

To increase the IGBT gate drive current, a non-inverting current buffer (such as the NPN/PNP buffer shown in Figure 9-13) can be used. Inverting types are not compatible with the desaturation fault protection circuitry and must be avoided. The MJD44H11/MJD45H11 pair is appropriate for peak currents up to 15 A, the D44VH10/D45VH10 pair is up to 20-A peak.

In the case of an over-current detection, the soft turn off (STO) is activated. External components must be added to implement STO instead of normal turn off speed when an external buffer is used. $C_{STO}$ sets the timing for soft turn off and $R_{STO}$ limits the inrush current to below the current rating of the internal FET (10A). $R_{STO}$ must be at least (VDD–VEE)/10. The soft turn off timing is determined by the internal current source of 400 mA and the capacitor $C_{STO}$. $C_{STO}$ is calculated using Equation 11.

$$C_{STO} = \frac{I_{STO} \cdot t_{STO}}{VDD - VEE} \tag{11}$$

- $I_{STO}$ is the internal STO current source, 400 mA
- $t_{STO}$ is the desired STO timing

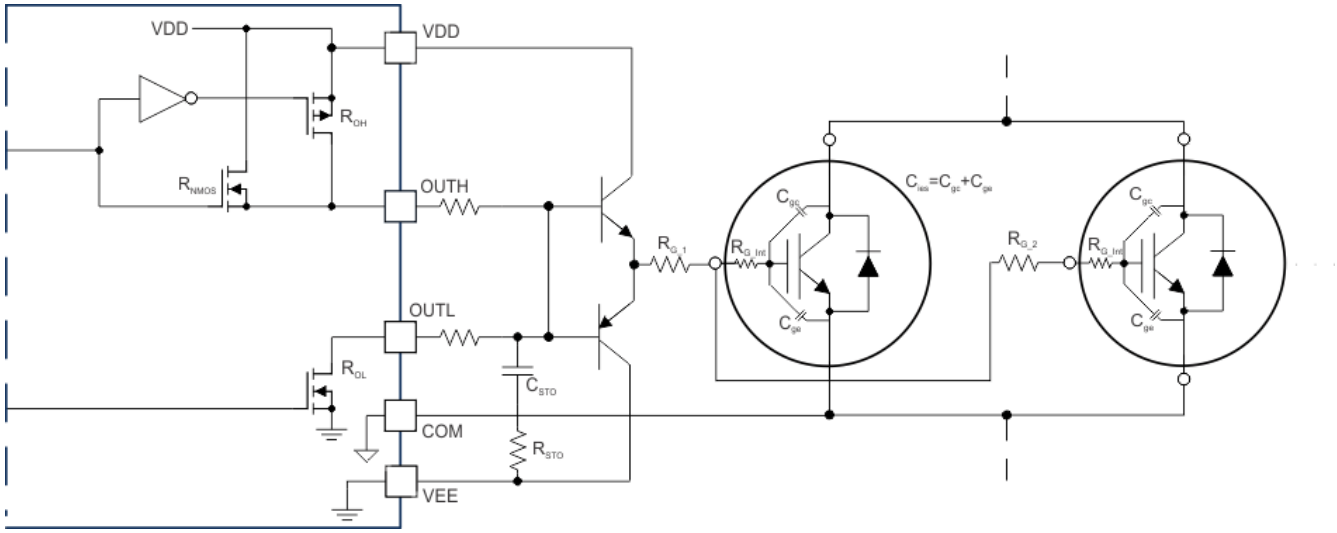


**Figure 9-13. Current Buffer for Increased Drive Strength**

### 9.2.3 Application Curves

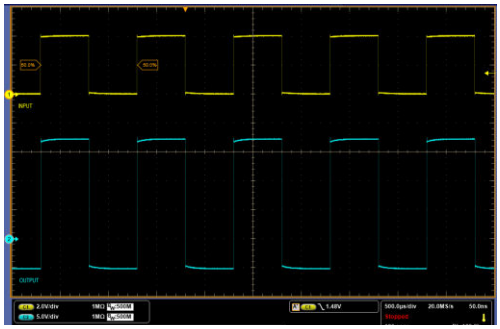

**Figure 9-14. PWM Input (Yellow) and Driver Output (Blue)**

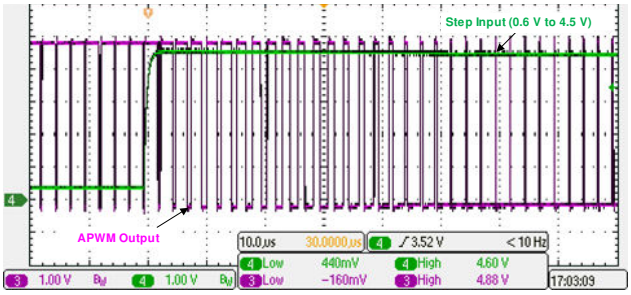


**Figure 9-15. AIN Step Input (Green) and APWM Output (Pink)**


Copyright © 2023 Texas Instruments Incorporated

## 10 Power Supply Recommendations

During the turn on and turn off switching transient, the peak source and sink current is provided by the VDD and VEE power supply. The large peak current is possible to drain the VDD and VEE voltage level and cause a voltage droop on the power supplies. To stabilize the power supply and ensure a reliable operation, TI recommends a set of decoupling capacitors at the power supplies. Considering the UCC21750 has ±10-A peak drive strength and can generate high dV/dt, TI recommends a 10-µF bypass cap between VDD and COM, VEE and COM. TI recommends a 1-µF bypass cap between VCC and GND due to less current comparing with output side power supplies. A 0.1-µF decoupling cap is also recommended for each power supply to filter out high frequency noise. The decoupling capacitors must be low ESR and ESL to avoid high frequency noise, and must be placed as close as possible to the VCC, VDD and VEE pins to prevent noise coupling from the system parasitics of PCB layout.

Copyright © 2023 Texas Instruments Incorporated

# 11 Layout

## 11.1 Layout Guidelines

Due to the strong drive strength of the UCC21750, careful considerations must be taken in PCB design. Below are some key points:

- The driver must be placed as close as possible to the power semiconductor to reduce the parasitic inductance of the gate loop on the PCB traces.
- The decoupling capacitors of the input and output power supplies must be placed as close as possible to the power supply pins. The peak current generated at each switching transient can cause high dI/dt and voltage spike on the parasitic inductance of PCB traces.
- The driver COM pin must be connected to the Kelvin connection of SiC MOSFET source or IGBT emitter. If the power device does not have a split Kelvin source or emitter, the COM pin must be connected as close as possible to the source or emitter terminal of the power device package to separate the gate loop from the high power switching loop
- Use a ground plane on the input side to shield the input signals. The input signals can be distorted by the high frequency noise generated by the output side switching transients. The ground plane provides a low-inductance filter for the return current flow.
- If the gate driver is used for the low side switch which the COM pin connected to the dc bus negative, use the ground plane on the output side to shield the output signals from the noise generated by the switch node; if the gate driver is used for the high side switch, which the COM pin is connected to the switch node, ground plane is not recommended
- If ground plane is not used on the output side, separate the return path of the DESAT and AIN ground loop from the gate loop ground which has large peak source and sink current.
- No PCB trace or copper is allowed under the gate driver. TI recommends a PCB cutout to avoid any noise coupling between the input and output side which can contaminate the isolation barrier.


Copyright © 2023 Texas Instruments Incorporated

## 11.2 Layout Example

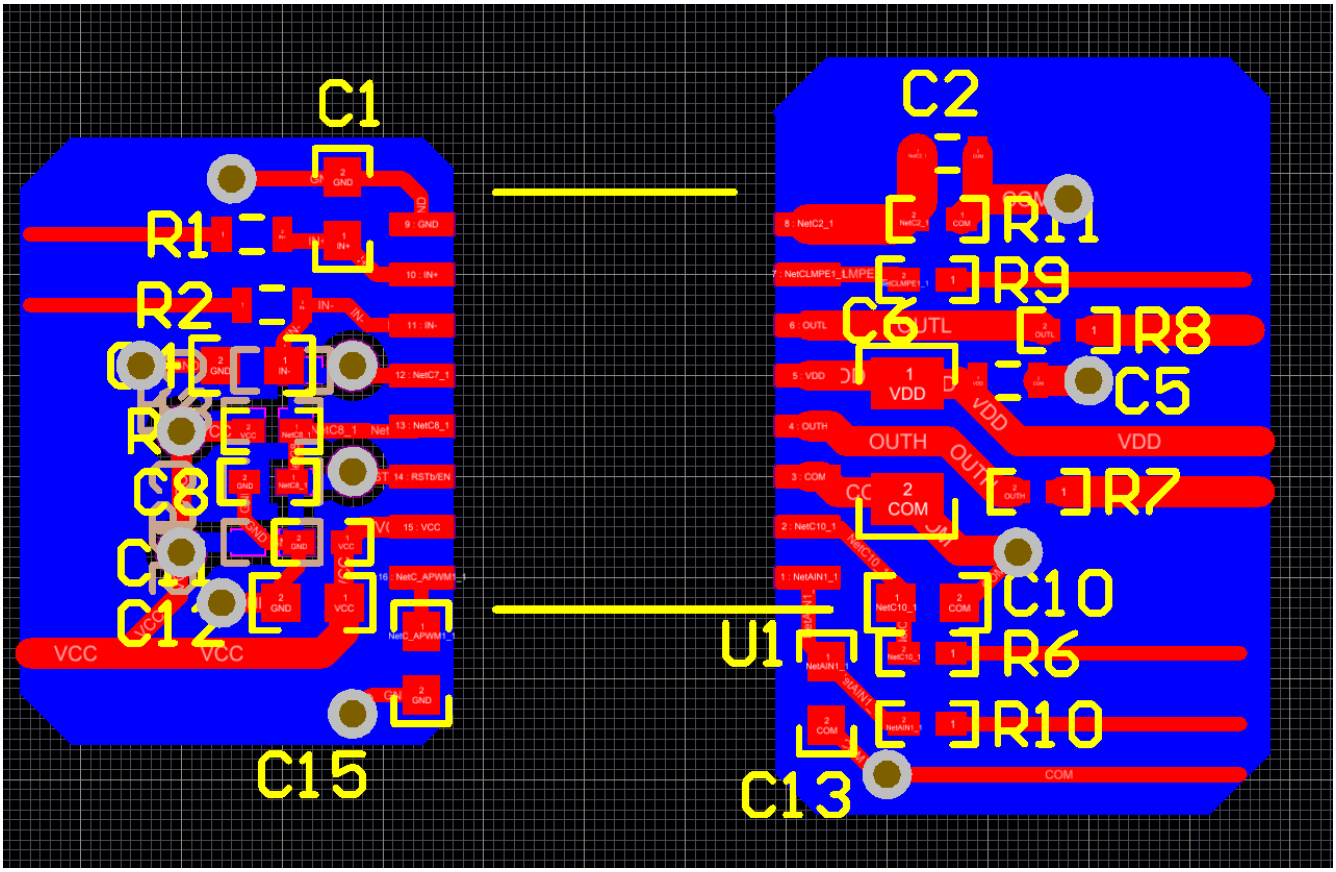


**Figure 11-1. Layout Example**

# 12 Device and Documentation Support

## 12.1 Device Support

### 12.1.1 Third-Party Products Disclaimer

TI'S PUBLICATION OF INFORMATION REGARDING THIRD-PARTY PRODUCTS OR SERVICES DOES NOT CONSTITUTE AN ENDORSEMENT REGARDING THE SUITABILITY OF SUCH PRODUCTS OR SERVICES OR A WARRANTY, REPRESENTATION OR ENDORSEMENT OF SUCH PRODUCTS OR SERVICES, EITHER ALONE OR IN COMBINATION WITH ANY TI PRODUCT OR SERVICE.

## 12.2 Documentation Support

### 12.2.1 Related Documentation

For related documentation see the following:

- *Isolation Glossary*

## 12.3 Receiving Notification of Documentation Updates

To receive notification of documentation updates, navigate to the device product folder on ti.com. Click on *Subscribe to updates* to register and receive a weekly digest of any product information that has changed. For change details, review the revision history included in any revised document.

## 12.4 Support Resources

TI E2E™ support forums are an engineer's go-to source for fast, verified answers and design help — straight from the experts. Search existing answers or ask your own question to get the quick design help you need.

Linked content is provided "AS IS" by the respective contributors. They do not constitute TI specifications and do not necessarily reflect TI's views; see TI's Terms of Use.

## 12.5 Trademarks

TI E2E™ is a trademark of Texas Instruments.
All trademarks are the property of their respective owners.

## 12.6 Electrostatic Discharge Caution

This integrated circuit can be damaged by ESD. Texas Instruments recommends that all integrated circuits be handled with appropriate precautions. Failure to observe proper handling and installation procedures can cause damage.

ESD damage can range from subtle performance degradation to complete device failure. Precision integrated circuits may be more susceptible to damage because very small parametric changes could cause the device not to meet its published specifications.

## 12.7 Glossary

| | |
|---|---|
| TI Glossary | This glossary lists and explains terms, acronyms, and definitions. |

# 13 Mechanical, Packaging, and Orderable Information

The following pages include mechanical packaging and orderable information. This information is the most current data available for the designated devices. This data is subject to change without notice and revision of this document. For browser-based versions of this data sheet, refer to the left-hand navigation.


Copyright © 2023 Texas Instruments Incorporated

## PACKAGING INFORMATION

| Orderable part number | Status (1) | Material type (2) | Package \| Pins | Package qty \| Carrier | RoHS (3) | Lead finish/ Ball material (4) | MSL rating/ Peak reflow (5) | Op temp (°C) | Part marking (6) |
|---|---|---|---|---|---|---|---|---|---|
| UCC21750DW | Obsolete | Production | SOIC (DW) \| 16 | - | - | Call TI | Call TI | -40 to 125 | UCC21750 |
| UCC21750DWR | Active | Production | SOIC (DW) \| 16 | 2000 \| LARGE T&R | Yes | NIPDAU | Level-2-260C-1 YEAR | -40 to 125 | UCC21750 |
| UCC21750DWR.A | Active | Production | SOIC (DW) \| 16 | 2000 \| LARGE T&R | Yes | NIPDAU | Level-2-260C-1 YEAR | -40 to 125 | UCC21750 |
| UCC21750DWR.B | Active | Production | SOIC (DW) \| 16 | 2000 \| LARGE T&R | Yes | NIPDAU | Level-2-260C-1 YEAR | -40 to 125 | UCC21750 |

(1) **Status:** For more details on status, see our product life cycle.

(2) **Material type:** When designated, preproduction parts are prototypes/experimental devices, and are not yet approved or released for full production. Testing and final process, including without limitation quality assurance, reliability performance testing, and/or process qualification, may not yet be complete, and this item is subject to further changes or possible discontinuation. If available for ordering, purchases will be subject to an additional waiver at checkout, and are intended for early internal evaluation purposes only. These items are sold without warranties of any kind.

(3) **RoHS values:** Yes, No, RoHS Exempt. See the TI RoHS Statement for additional information and value definition.

(4) **Lead finish/Ball material:** Parts may have multiple material finish options. Finish options are separated by a vertical ruled line. Lead finish/Ball material values may wrap to two lines if the finish value exceeds the maximum column width.

(5) **MSL rating/Peak reflow:** The moisture sensitivity level ratings and peak solder (reflow) temperatures. In the event that a part has multiple moisture sensitivity ratings, only the lowest level per JEDEC standards is shown. Refer to the shipping label for the actual reflow temperature that will be used to mount the part to the printed circuit board.

(6) **Part marking:** There may be an additional marking, which relates to the logo, the lot trace code information, or the environmental category of the part.

Multiple part markings will be inside parentheses. Only one part marking contained in parentheses and separated by a "~" will appear on a part. If a line is indented then it is a continuation of the previous line and the two combined represent the entire part marking for that device.

**Important Information and Disclaimer:**The information provided on this page represents TI's knowledge and belief as of the date that it is provided. TI bases its knowledge and belief on information provided by third parties, and makes no representation or warranty as to the accuracy of such information. Efforts are underway to better integrate information from third parties. TI has taken and continues to take reasonable steps to provide representative and accurate information but may not have conducted destructive testing or chemical analysis on incoming materials and chemicals. TI and TI suppliers consider certain information to be proprietary, and thus CAS numbers and other limited information may not be available for release.

In no event shall TI's liability arising out of such information exceed the total purchase price of the TI part(s) at issue in this document sold by TI to Customer on an annual basis.

**OTHER QUALIFIED VERSIONS OF UCC21750 :**

- Automotive : UCC21750-Q1

NOTE: Qualified Version Definitions:

- Automotive - Q100 devices qualified for high-reliability automotive applications targeting zero defects

## TAPE AND REEL INFORMATION

**REEL DIMENSIONS**

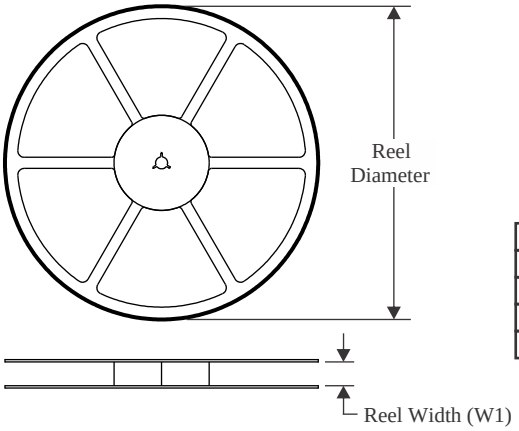


**TAPE DIMENSIONS**

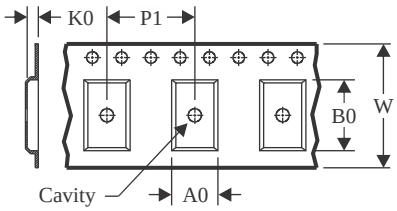


| | |
|---|---|
| A0 | Dimension designed to accommodate the component width |
| B0 | Dimension designed to accommodate the component length |
| K0 | Dimension designed to accommodate the component thickness |
| W | Overall width of the carrier tape |
| P1 | Pitch between successive cavity centers |

**QUADRANT ASSIGNMENTS FOR PIN 1 ORIENTATION IN TAPE**

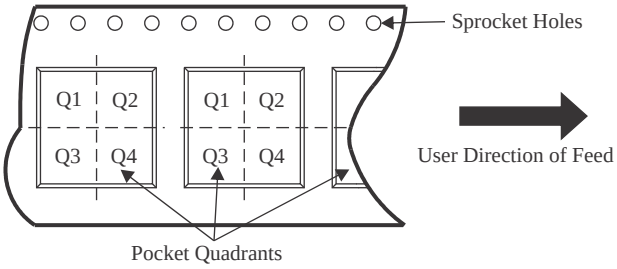


*All dimensions are nominal

| Device | Package Type | Package Drawing | Pins | SPQ | Reel Diameter (mm) | Reel Width W1 (mm) | A0 (mm) | B0 (mm) | K0 (mm) | P1 (mm) | W (mm) | Pin1 Quadrant |
|---|---|---|---|---|---|---|---|---|---|---|---|---|
| UCC21750DWR | SOIC | DW | 16 | 2000 | 330.0 | 16.4 | 10.75 | 10.7 | 2.7 | 12.0 | 16.0 | Q1 |

TAPE AND REEL BOX DIMENSIONS

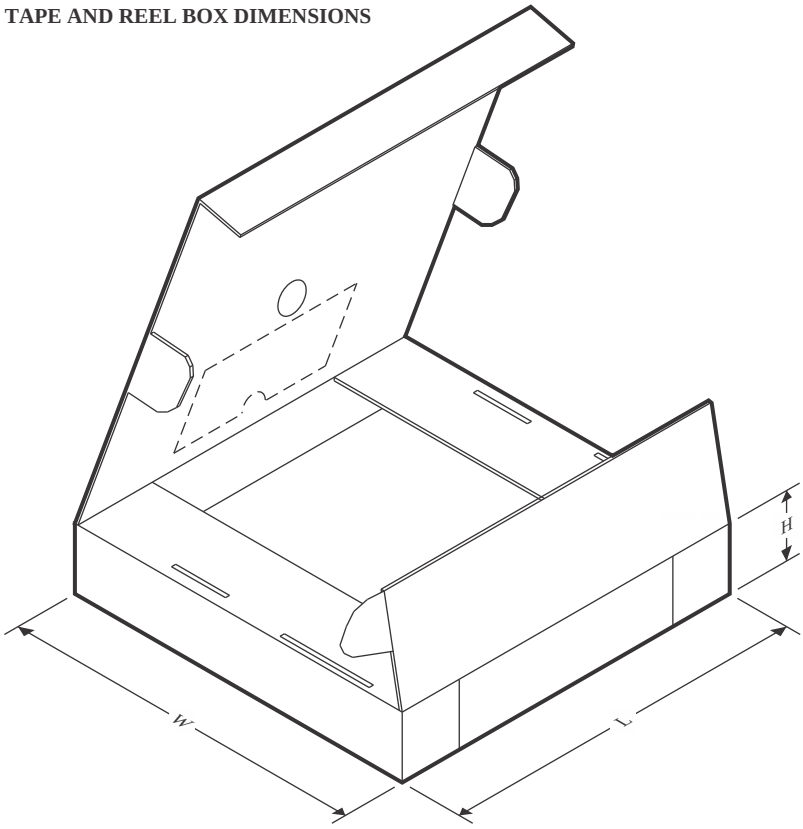


*All dimensions are nominal

| Device | Package Type | Package Drawing | Pins | SPQ | Length (mm) | Width (mm) | Height (mm) |
|---|---|---|---|---|---|---|---|
| UCC21750DWR | SOIC | DW | 16 | 2000 | 353.0 | 353.0 | 32.0 |

# GENERIC PACKAGE VIEW

## DW 16

## SOIC - 2.65 mm max height

**7.5 x 10.3, 1.27 mm pitch**

SMALL OUTLINE INTEGRATED CIRCUIT

This image is a representation of the package family, actual package may vary.
Refer to the product data sheet for package details.

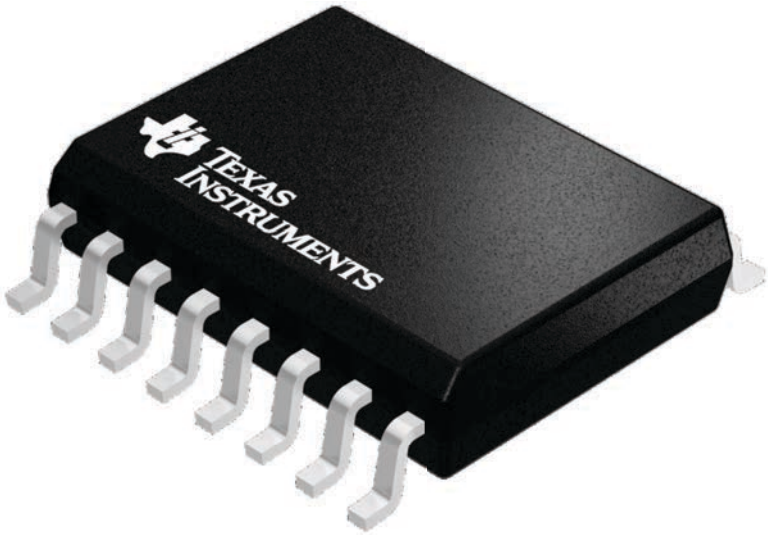


4224780/A

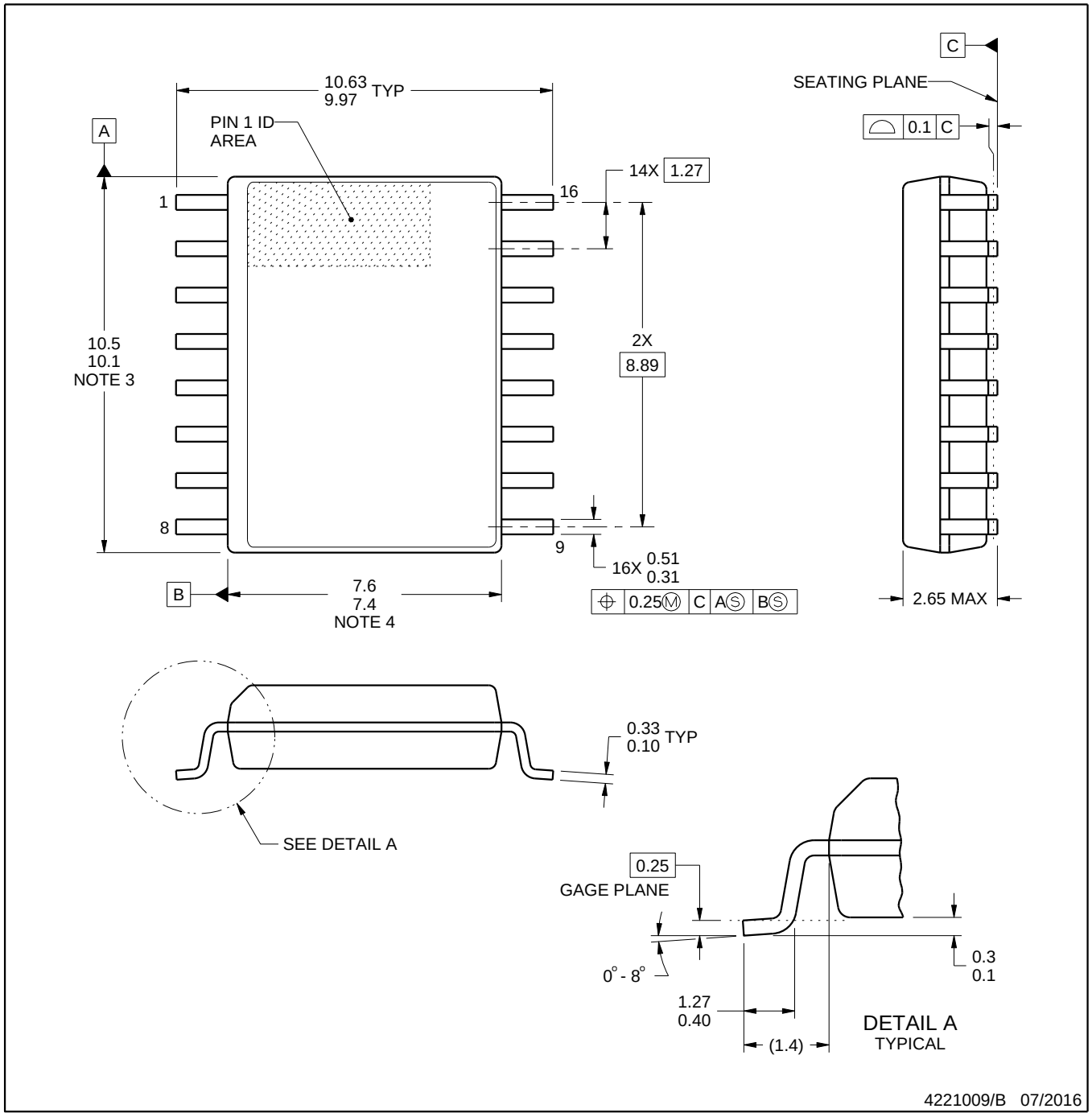


NOTES:

1. All linear dimensions are in millimeters. Dimensions in parenthesis are for reference only. Dimensioning and tolerancing per ASME Y14.5M.
2. This drawing is subject to change without notice.
3. This dimension does not include mold flash, protrusions, or gate burrs. Mold flash, protrusions, or gate burrs shall not exceed 0.15 mm, per side.
4. This dimension does not include interlead flash. Interlead flash shall not exceed 0.25 mm, per side.
5. Reference JEDEC registration MS-013.

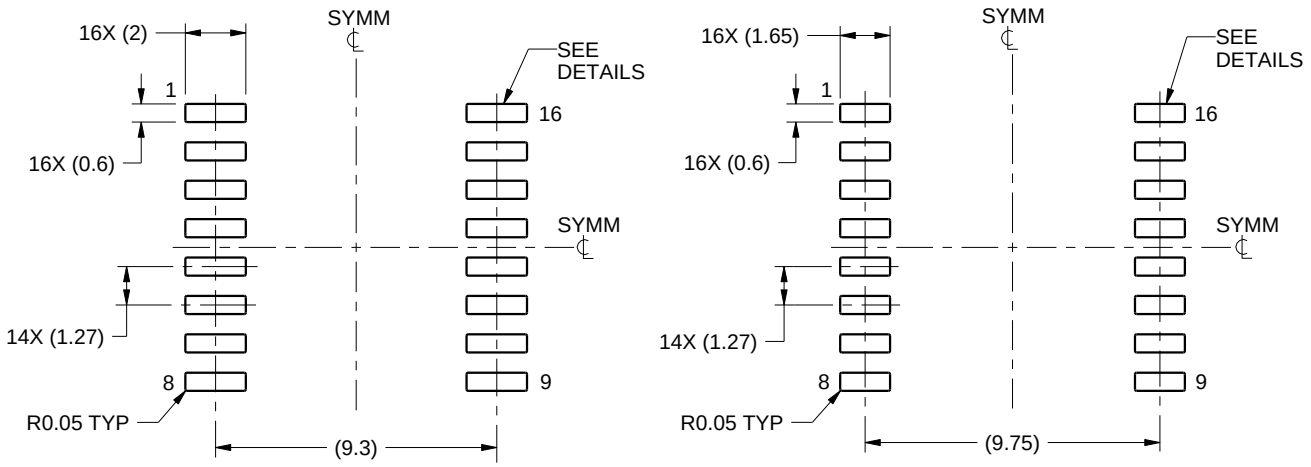


IPC-7351 NOMINAL
7.3 mm CLEARANCE/CREEPAGE

HV / ISOLATION OPTION
8.1 mm CLEARANCE/CREEPAGE

LAND PATTERN EXAMPLE
SCALE:4X

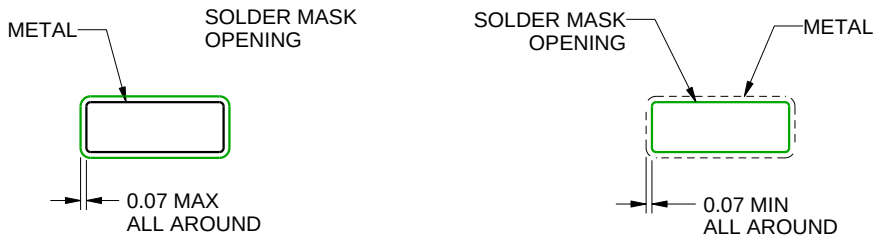


NON SOLDER MASK DEFINED

SOLDER MASK DEFINED

SOLDER MASK DETAILS

4221009/B 07/2016

NOTES: (continued)

6. Publication IPC-7351 may have alternate designs.
7. Solder mask tolerances between and around signal pads can vary based on board fabrication site.

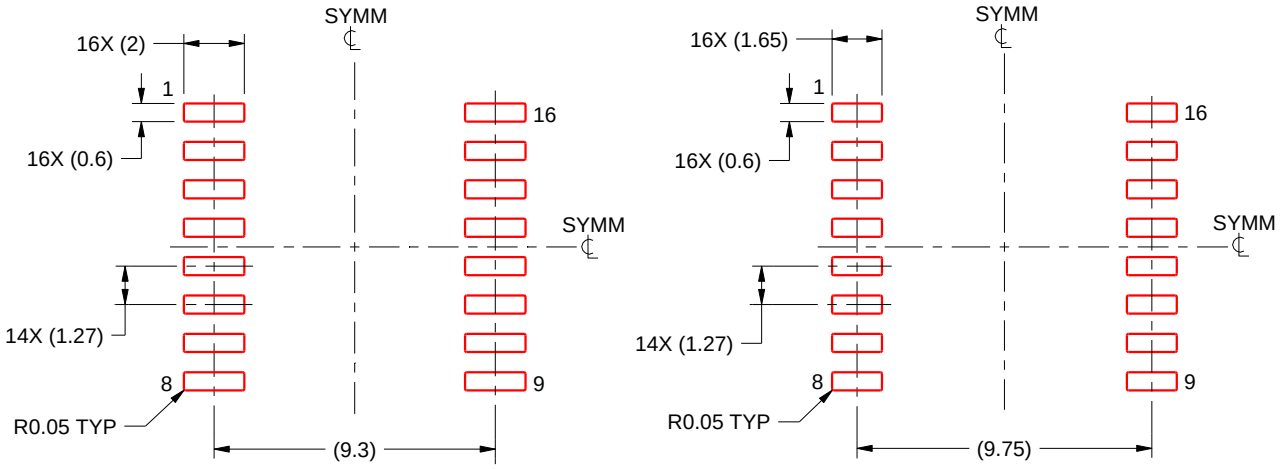


IPC-7351 NOMINAL
7.3 mm CLEARANCE/CREEPAGE

HV / ISOLATION OPTION
8.1 mm CLEARANCE/CREEPAGE

SOLDER PASTE EXAMPLE
BASED ON 0.125 mm THICK STENCIL
SCALE:4X

4221009/B 07/2016

NOTES: (continued)

8. Laser cutting apertures with trapezoidal walls and rounded corners may offer better paste release. IPC-7525 may have alternate design recommendations.
9. Board assembly site may have different recommendations for stencil design.

# IMPORTANT NOTICE AND DISCLAIMER

TI PROVIDES TECHNICAL AND RELIABILITY DATA (INCLUDING DATA SHEETS), DESIGN RESOURCES (INCLUDING REFERENCE DESIGNS), APPLICATION OR OTHER DESIGN ADVICE, WEB TOOLS, SAFETY INFORMATION, AND OTHER RESOURCES “AS IS” AND WITH ALL FAULTS, AND DISCLAIMS ALL WARRANTIES, EXPRESS AND IMPLIED, INCLUDING WITHOUT LIMITATION ANY IMPLIED WARRANTIES OF MERCHANTABILITY, FITNESS FOR A PARTICULAR PURPOSE OR NON-INFRINGEMENT OF THIRD PARTY INTELLECTUAL PROPERTY RIGHTS.

These resources are intended for skilled developers designing with TI products. You are solely responsible for (1) selecting the appropriate TI products for your application, (2) designing, validating and testing your application, and (3) ensuring your application meets applicable standards, and any other safety, security, regulatory or other requirements.

These resources are subject to change without notice. TI grants you permission to use these resources only for development of an application that uses the TI products described in the resource. Other reproduction and display of these resources is prohibited. No license is granted to any other TI intellectual property right or to any third party intellectual property right. TI disclaims responsibility for, and you will fully indemnify TI and its representatives against, any claims, damages, costs, losses, and liabilities arising out of your use of these resources.

TI’s products are provided subject to TI’s Terms of Sale or other applicable terms available either on ti.com or provided in conjunction with such TI products. TI’s provision of these resources does not expand or otherwise alter TI’s applicable warranties or warranty disclaimers for TI products.

TI objects to and rejects any additional or different terms you may have proposed.

Mailing Address: Texas Instruments, Post Office Box 655303, Dallas, Texas 75265
Copyright © 2025, Texas Instruments Incorporated