# SN74CBT3251 1-of-8 FET Multiplexer and Demultiplexer

## 1 Features

- 5-Ω Switch Connection Between Two Ports
- TTL-Compatible Input Levels
- Low Crosstalk Between Switches
- Fast Switching and Propagation Speeds
- Operating Temperature Range: –40°C to 85°C

## 2 Applications

- Digital Radio
- Signal Gating
- Factory Automation
- Televisions
- Appliances
- Programmable Logic Circuits
- Sensors

## 3 Description

The SN74CBT3251 is a 1-of-8 high-speed TTL-compatible FET multiplexer and demultiplexer. The low ON-state resistance of the switch allows connections to be made with minimal propagation delay.

When output enable ($\overline{OE}$) is low, the SN74CBT3251 is enabled, and S0, S1, and S2 select one of the B outputs for the A-input data.

**Device Information(1)**

| PART NUMBER | PACKAGE | BODY SIZE (NOM) |
|---|---|---|
| SN74CBT3251RGY | VQFN (16) | 3.50 mm × 4.00 mm |
| SN74CBT3251DBQ | SSOP (16) | 3.90 mm × 4.90 mm |
| SN74CBT3251PW | TSSOP (16) | 4.40 mm × 5.00 mm |
| SN74CBT3251DB | SSOP (16) | 5.30 mm × 6.20 mm |
| SN74CBT3251D | SOIC (16) | 3.91 mm × 9.90 mm |

(1) For all available packages, see the orderable addendum at the end of the data sheet.

**Functional Diagram of the SN74CBT3251**

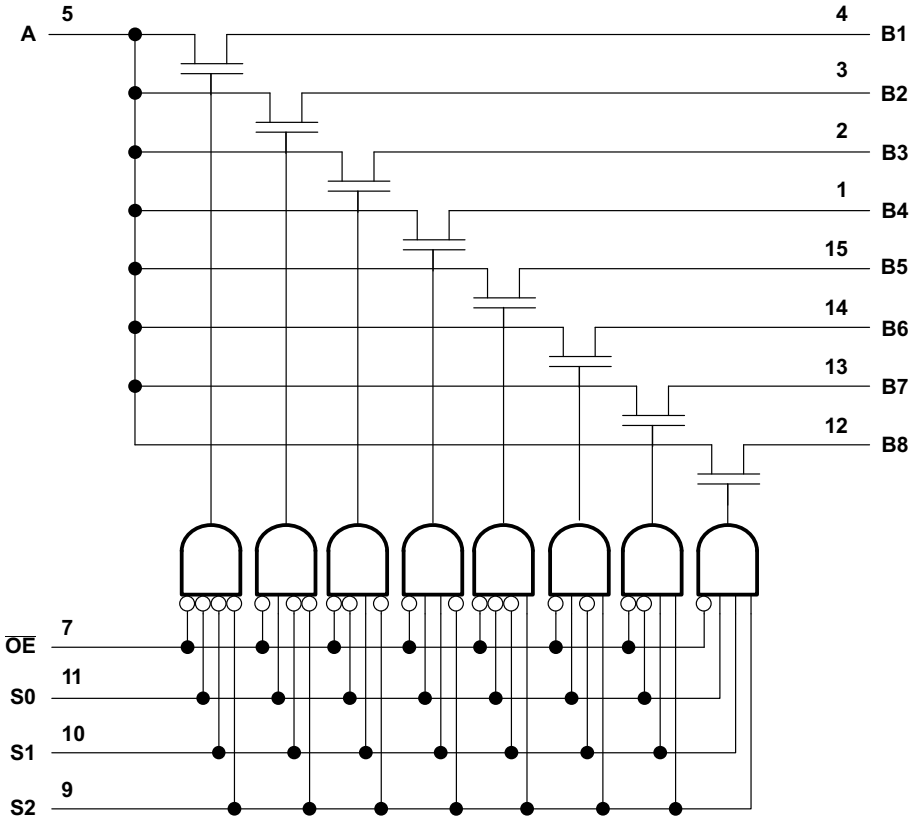


An IMPORTANT NOTICE at the end of this data sheet addresses availability, warranty, changes, use in safety-critical applications, intellectual property matters and other important disclaimers. PRODUCTION DATA.

## Table of Contents

**1 Features** ... 1
**2 Applications** ... 1
**3 Description** ... 1
**4 Revision History** ... 2
**5 Pin Configuration and Functions** ... 3
**6 Specifications** ... 4
6.1 Absolute Maximum Ratings ... 4
6.2 ESD Ratings ... 4
6.3 Recommended Operating Conditions ... 4
6.4 Thermal Information ... 4
6.5 Electrical Characteristics ... 5
6.6 Switching Characteristics ... 5
6.7 Typical Characteristic ... 5
**7 Parameter Measurement Information** ... 6
**8 Detailed Description** ... 7
8.1 Overview ... 7
8.2 Functional Block Diagram ... 7
8.3 Feature Description ... 7
8.4 Device Functional Modes ... 7
**9 Application and Implementation** ... 8
9.1 Application Information ... 8
9.2 Typical Application ... 8
**10 Power Supply Recommendations** ... 9
**11 Layout** ... 9
11.1 Layout Guidelines ... 9
11.2 Layout Example ... 9
**12 Device and Documentation Support** ... 10
12.1 Documentation Support ... 10
12.2 Community Resources ... 10
12.3 Trademarks ... 10
12.4 Electrostatic Discharge Caution ... 10
12.5 Glossary ... 10
**13 Mechanical, Packaging, and Orderable Information** ... 10

## 4 Revision History

| Changes from Revision L (January 2004) to Revision M | Page |
|---|---|
| • Added *ESD Ratings* table, *Feature Description* section, *Device Functional Modes*, *Application and Implementation* section, *Power Supply Recommendations* section, *Layout* section, *Device and Documentation Support* section, and *Mechanical, Packaging, and Orderable Information* section. | 1 |


Copyright © 1995–2015, Texas Instruments Incorporated

# 5 Pin Configuration and Functions

**D, DB, DBQ, or PW Packages**
**16-Pin SOIC, SSOP, or TSSOP**
**Top View**

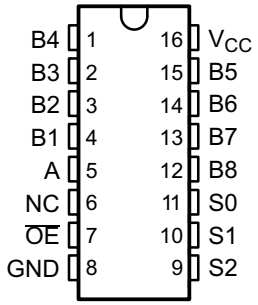


NC − No internal connection

**RGY Package**
**16-Pin VQFN**
**Top View**

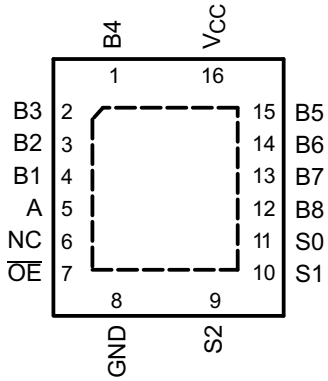


NC − No internal connection

**Pin Functions**

| PIN | | I/O | DESCRIPTION |
|---|---|---|---|
| NO. | NAME | | |
| 1 | B4 | I/O | Port B4 |
| 2 | B3 | I/O | Port B3 |
| 3 | B2 | I/O | Port B2 |
| 4 | B1 | I/O | Port B1 |
| 5 | A | I/O | Common OUT/IN |
| 6 | NC | — | No Connect |
| 7 | $\overline{OE}$ | I | Enable Ports (Active Low). See Table 1. |
| 8 | GND | — | Ground |
| 9 | S2 | I | Select Pin 2. See Table 1. |
| 10 | S1 | I | Select Pin 1. See Table 1. |
| 11 | S0 | I | Select Pin 0. See Table 1. |
| 12 | B8 | I/O | Port B8 |
| 13 | B7 | I/O | Port B7 |
| 14 | B6 | I/O | Port B6 |
| 15 | B5 | I/O | Port B5 |
| 16 | $V_{CC}$ | — | Power Pin |

Copyright © 1995–2015, Texas Instruments Incorporated

# 6 Specifications

## 6.1 Absolute Maximum Ratings

over operating free-air temperature range (unless otherwise noted)[1]

| | MIN | MAX | UNIT |
|---|---|---|---|
| Supply voltage, $V_{CC}$ | –0.5 | 7 | V |
| Input voltage, $V_I$[2] | –0.5 | 7 | V |
| Continuous channel current | | 128 | mA |
| Input clamp current, $I_K$ ($V_{I/O}$ < 0) | | –50 | mA |
| Maximum junction temperature, $T_J$ | | 150 | °C |
| Storage temperature, $T_{stg}$ | –65 | 150 | °C |

(1) Stresses beyond those listed under *Absolute Maximum Ratings* may cause permanent damage to the device. These are stress ratings only, which do not imply functional operation of the device at these or any other conditions beyond those indicated under *Recommended Operating Conditions*. Exposure to absolute-maximum-rated conditions for extended periods may affect device reliability.
(2) The input and output negative-voltage ratings may be exceeded if the input and output clamp-current ratings are observed.

## 6.2 ESD Ratings

| | | | VALUE | UNIT |
|---|---|---|---|---|
| $V_{(ESD)}$ | Electrostatic discharge | Human-body model (HBM), per ANSI/ESDA/JEDEC JS-001[1] | ±1500 | V |
| | | Charged-device model (CDM), per JEDEC specification JESD22-C101[2] | ±1000 | |

(1) JEDEC document JEP155 states that 500-V HBM allows safe manufacturing with a standard ESD control process.
(2) JEDEC document JEP157 states that 250-V CDM allows safe manufacturing with a standard ESD control process.

## 6.3 Recommended Operating Conditions

over operating free-air temperature range (unless otherwise noted)

| | | MIN | MAX | UNIT |
|---|---|---|---|---|
| $V_{CC}$ | Supply voltage | 4 | 5.5 | V |
| $V_{IH}$ | High-level control input voltage | 2 | | V |
| $V_{IL}$ | Low-level control input voltage | | 0.8 | V |
| $T_A$ | Operating free-air temperature | –40 | 85 | °C |

## 6.4 Thermal Information

| THERMAL METRIC[1] | | SN74CBT3251 | | | | | UNIT |
|---|---|---|---|---|---|---|---|
| | | D (SOIC) | DB (SSOP) | DBQ (SSOP) | PW (TSSOP) | RGY (VQFN) | |
| | | 16 PINS | 16 PINS | 16 PINS | 16 PINS | 16 PINS | |
| $R_{\theta JA}$ | Junction-to-ambient thermal resistance | 73[2] | 82[2] | 90[2] | 108[2] | 39[3] | °C/W |
| $R_{\theta JC(top)}$ | Junction-to-case (top) thermal resistance | 70.6 | 49.0 | 59.0 | 41.6 | 52.8 | °C/W |
| $R_{\theta JB}$ | Junction-to-board thermal resistance | 77.8 | 49.4 | 50.1 | 51.9 | 20.4 | °C/W |
| $\psi_{JT}$ | Junction-to-top characterization parameter | 24.3 | 10.5 | 13.9 | 4.0 | 1.1 | °C/W |
| $\psi_{JB}$ | Junction-to-board characterization parameter | 77.4 | 48.8 | 49.7 | 51.3 | 20.4 | °C/W |
| $R_{\theta JC(bot)}$ | Junction-to-case (bottom) thermal resistance | — | — | — | — | 6.4 | °C/W |

(1) For more information about traditional and new thermal metrics, see the *Semiconductor and IC Package Thermal Metrics* application report, SPRA953.
(2) The package thermal impedance is calculated in accordance with JESD 51-7.
(3) The package thermal impedance is calculated in accordance with JESD 51-5.


Copyright © 1995–2015, Texas Instruments Incorporated

## 6.5 Electrical Characteristics

over operating free-air temperature range (unless otherwise noted)

| PARAMETER | | TEST CONDITIONS | | | MIN | TYP(1) | MAX | UNIT |
|---|---|---|---|---|---|---|---|---|
| $V_{IK}$ | | $V_{CC}$ = 4.5 V, $I_I$ = −18 mA | | | | | –1.2 | V |
| $I_I$ | | $V_{CC}$ = 5.5 V, $V_I$ = 5.5 V or GND | | | | | ±1 | µA |
| $I_{CC}$ | | $V_{CC}$ = 5.5 V, $I_O$ = 0, $V_I$ = VCC or GND | | | | | 3 | µA |
| $\Delta I_{CC}$(2) | Control inputs | $V_{CC}$ = 5.5 V; One input at 3.4 V, other inputs at $V_{CC}$ or GND | | | | | 2.5 | mA |
| $C_i$ | Control inputs | $V_I$ = 3 V or 0 | | | | 3.5 | | pF |
| $C_{io(OFF)}$ | A port | $V_O$ = 3 V or 0, $\overline{OE}$ = $V_{CC}$ | | | | 17.5 | | pF |
| | B port | $V_O$ = 3 V or 0, $\overline{OE}$ = $V_{CC}$ | | | | 4 | | |
| $r_{on}$(3) | | $V_{CC}$ = 4 V, TYP at $V_{CC}$ = 4 V, $V_I$ = 2.4 V, $I_I$ = 15 mA | | | | 14 | 20 | Ω |
| | | $V_{CC}$ = 4.5 V | $V_I$ = 0 | $I_I$ = 64 mA | | 5 | 7 | |
| | | | | $I_I$ = 30 mA | | 5 | 7 | |
| | | | $V_I$ = 2.4 V, $I_I$ = 15 mA | | | 10 | 15 | |

(1) All typical values are at $V_{CC}$ = 5 V (unless otherwise noted), $T_A$ = 25°C.
(2) This is the increase in supply current for each input at the specified TTL voltage level, rather than $V_{CC}$ or GND.
(3) Measured by the voltage drop between the A and the B terminals at the indicated current through the switch. On-state resistance is determined by the lower of the voltages of the two (A or B) terminals.

## 6.6 Switching Characteristics

over operating free-air temperature free-air temperature range, $C_L$ = 50 pF (unless otherwise noted)

| PARAMETER | FROM (INPUT) | TO (OUTPUT) | $V_{CC}$ | MIN | MAX | UNIT |
|---|---|---|---|---|---|---|
| $t_{pd}$(1) | A or B | B or A | $V_{CC}$ = 4 V | | 0.35 | ns |
| | | | $V_{CC}$ = 5 V ±0.5 V | | 0.24 | |
| $t_{pd}$ | S | A | $V_{CC}$ = 4 V | | 6 | ns |
| | | | $V_{CC}$ = 5 V ±0.5 V | 2 | 5.5 | |
| $t_{en}$ | S | B | $V_{CC}$ = 4 V | | 6.4 | ns |
| | | | $V_{CC}$ = 5 V ±0.5 V | 1.5 | 5.6 | |
| | $\overline{OE}$ | A or B | $V_{CC}$ = 4 V | | 6.4 | |
| | | | $V_{CC}$ = 5 V ±0.5 V | 1.6 | 5.8 | |
| $t_{dis}$ | S | B | $V_{CC}$ = 4 V | | 6.8 | ns |
| | | | $V_{CC}$ = 5 V ±0.5 V | 1.9 | 6.4 | |
| | $\overline{OE}$ | A or B | $V_{CC}$ = 4 V | | 6 | |
| | | | $V_{CC}$ = 5 V ±0.5 V | 2.3 | 6.2 | |

(1) The propagation delay is the calculated RC time constant of the typical on-state resistance of the switch and the specified load capacitance, when driven by an ideal voltage source (zero output impedance).

## 6.7 Typical Characteristic

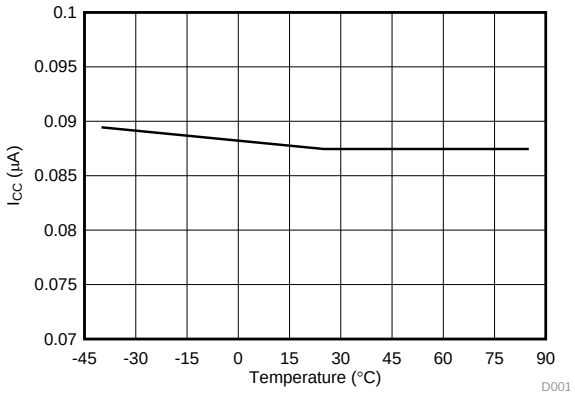


**Figure 1. $I_{CC}$ Variation With Temperature**

# 7 Parameter Measurement Information

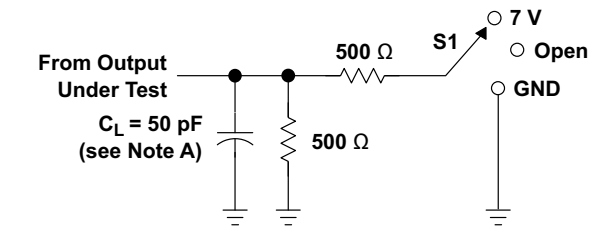


LOAD CIRCUIT

| TEST | S1 |
|---|---|
| $t_{pd}$ | Open |
| $t_{PLZ}/t_{PZL}$ | 7 V |
| $t_{PHZ}/t_{PZH}$ | Open |

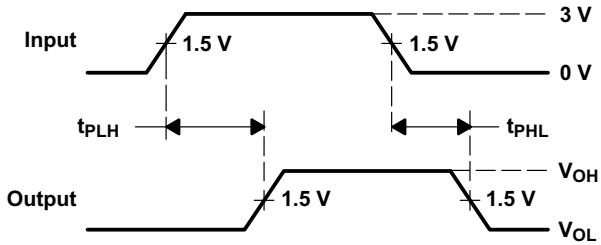


VOLTAGE WAVEFORMS
PROPAGATION DELAY TIMES

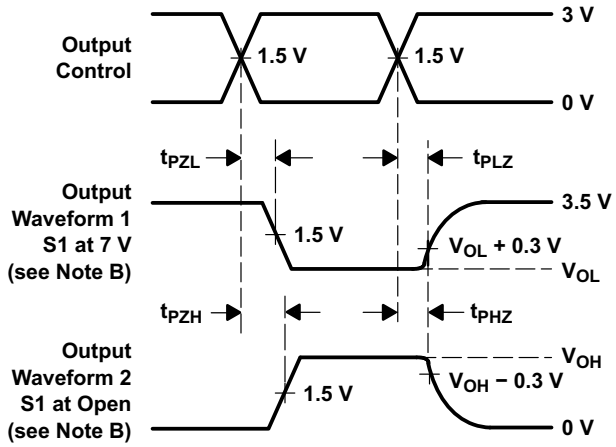


VOLTAGE WAVEFORMS
ENABLE AND DISABLE TIMES

NOTES:
A. $C_L$ includes probe and jig capacitance.
B. Waveform 1 is for an output with internal conditions such that the output is low except when disabled by the output control. Waveform 2 is for an output with internal conditions such that the output is high except when disabled by the output control.
C. All input pulses are supplied by generators having the following characteristics: PRR ≤ 10 MHz, $Z_O$ = 50 Ω, $t_r$ ≤ 2.5 ns, $t_f$ ≤ 2.5 ns.
D. The outputs are measured one at a time with one transition per measurement.
E. $t_{PLZ}$ and $t_{PHZ}$ are the same as $t_{dis}$.
F. $t_{PZL}$ and $t_{PZH}$ are the same as $t_{en}$.
G. $t_{PLH}$ and $t_{PHL}$ are the same as $t_{pd}$.
H. All parameters and waveforms are not applicable to all devices.

**Figure 2. Load Circuit and Voltage Waveforms**


Copyright © 1995–2015, Texas Instruments Incorporated

# 8 Detailed Description

## 8.1 Overview

The SN74CBT3251 device is a single 8-channel multiplexer with three binary control inputs, $S_0$, $S_1$, and $S_2$ and an $\overline{OE}$ (output enable, active low) input. The three binary signals select 1 of 8 channels to be turned on, and connect one of the 8 inputs to the output.

When they are used as demultiplexers, the CHANNEL IN/OUT terminals (B) are the outputs and the COMMON OUT/IN terminal (A) is the input.

## 8.2 Functional Block Diagram

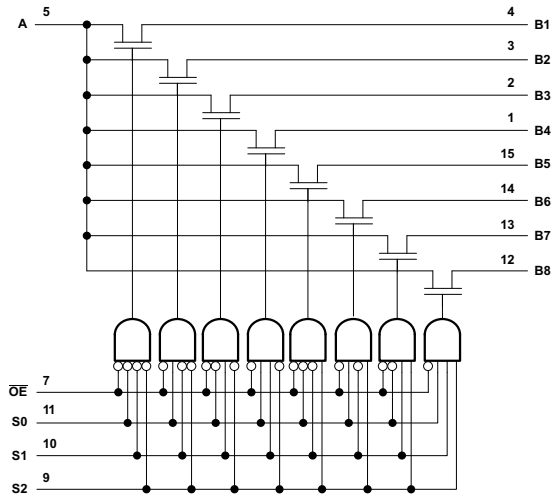


**Figure 3. Logic Diagram (Positive Logic)**

## 8.3 Feature Description

The SN74CBT3251 1-of-8 FET multiplexers and demultiplexers can accept a wide range of analog signal levels from 0 V to 5 V. It has low Ron resistance, typically 5-Ω for $V_{CC}$ = 5 V which allows very little signal loss through the switch. Binary address decoding on chip makes channel selection easy.

## 8.4 Device Functional Modes

Table 1 lists the functional modes of the SN74CBT3251.

**Table 1. Function Table (Each Multiplexer and Demultiplexer)**

| INPUTS | | | | FUNCTION |
|---|---|---|---|---|
| $\overline{OE}$ | S2 | S1 | S0 | |
| L | L | L | L | A port = B1 port |
| L | L | L | H | A port = B2 port |
| L | L | H | L | A port = B3 port |
| L | L | H | H | A port = B4 port |
| L | H | L | L | A port = B5 port |
| L | H | L | H | A port = B6 port |
| L | H | H | L | A port = B7 port |
| L | H | H | H | A port = B8 port |
| H | X | X | X | Disconnect |

Copyright © 1995–2015, Texas Instruments Incorporated

# 9 Application and Implementation

**NOTE**

Information in the following applications sections is not part of the TI component specification, and TI does not warrant its accuracy or completeness. TI's customers are responsible for determining suitability of components for their purposes. Customers should validate and test their design implementation to confirm system functionality.

## 9.1 Application Information

The SN74CBT351 device can be used for a wide variety of applications, including expanding MCU GPIOs.

## 9.2 Typical Application

One application of the SN74CBT3251 device is to use in conjunction with a microcontroller to poll a keypad. Figure 4 shows the basic schematic for such a polling system. The microcontroller uses the channel-select pins to cycle through the different channels while reading the input to see if a user is pressing any of the keys. This is a very robust setup that allows for simultaneous key presses with very little power consumption. It also uses very few pins on the microcontroller. The down side of polling is that the microcontroller must frequently scan the keys for a press.

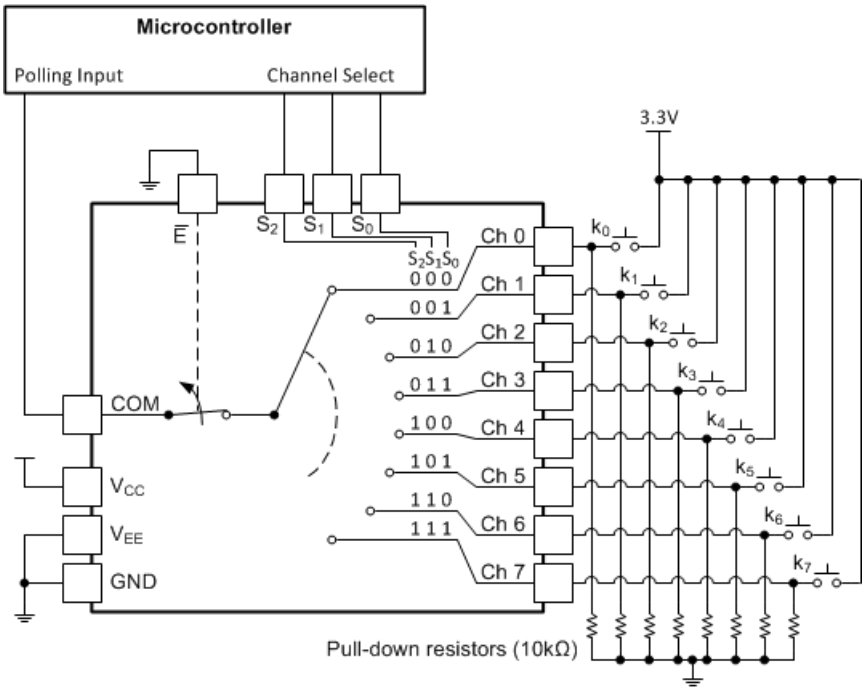


**Figure 4. Keypad Polling Application**

### 9.2.1 Design Requirements

These devices use CMOS technology and have balanced output drive. Take care to avoid bus contention because it can drive currents that would exceed maximum limits.

### 9.2.2 Detailed Design Procedure

1. Recommended input conditions:
   - For switch time specifications, see propagation delay times in *Recommended Operating Conditions*.
   - Inputs must not be pulled below ground.
   - For input voltage level specifications for control inputs, see $V_{IH}$ and $V_{IL}$ in *Recommended Operating Conditions*.


Copyright © 1995–2015, Texas Instruments Incorporated

## Typical Application (continued)

2. Input and output current consideration:
   – Load currents must not exceed per output and must not exceed (Continuous current through $V_{CC}$ or GND) total current for the part. These limits are located in *Absolute Maximum Ratings*.

### 9.2.3 Application Curve

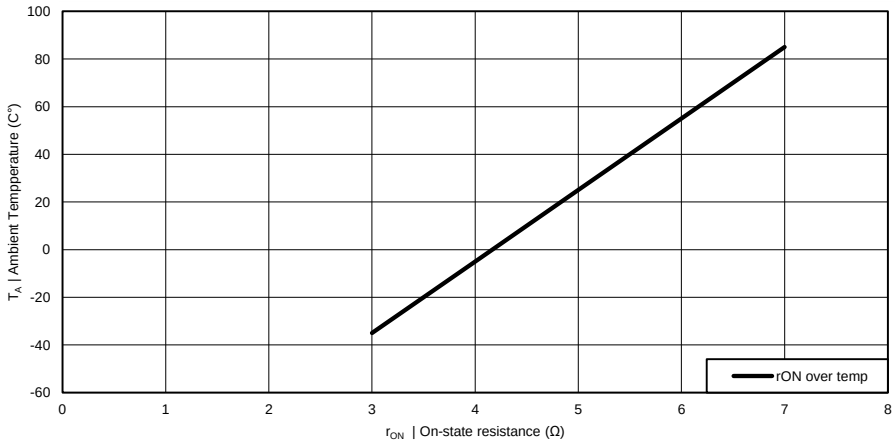


**Figure 5. $r_{ON}$ Over Temperature**

## 10 Power Supply Recommendations

The power supply can be any voltage between the minimum and maximum supply voltage rating located in *Recommended Operating Conditions*.

Each $V_{CC}$ pin should have a good bypass capacitor to prevent power disturbance. For devices with a single supply, a 0.1-μF capacitor is recommended and if there are multiple $V_{CC}$ pins then a 0.01-μF or 0.022-μF capacitor is recommended for each power pin. It is ok to parallel multiple bypass caps to reject different frequencies of noise. 0.1-μF and 1-μF capacitors are commonly used in parallel. The bypass capacitor should be installed as close to the power pin as possible for best results.

## 11 Layout

### 11.1 Layout Guidelines

When using multiple bit logic devices inputs must not ever float. In many cases, functions or parts of functions of digital logic devices are unused; for example, when only two inputs of a triple-input AND gate are used or only 3 of the 4 buffer gates are used. Such input pins must not be left unconnected because the undefined voltages at the outside connections result in undefined operational states. Specified below are the rules that must be observed under all circumstances. All unused inputs of digital logic devices must be connected to a high or low bias to prevent them from floating. The logic level that should be applied to any particular unused input depends on the function of the device. Generally they will be tied to GND or $V_{CC}$ whichever make more sense or is more convenient.

### 11.2 Layout Example

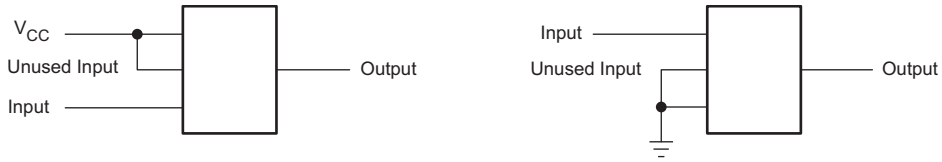


**Figure 6. Layout Diagram**

# 12 Device and Documentation Support

## 12.1 Documentation Support

### 12.1.1 Related Documentation

For related documentation, see the following:

*Implications of Slow or Floating CMOS Inputs*, SCBA004

## 12.2 Community Resources

The following links connect to TI community resources. Linked contents are provided "AS IS" by the respective contributors. They do not constitute TI specifications and do not necessarily reflect TI's views; see TI's Terms of Use.

**TI E2E™ Online Community** ***TI's Engineer-to-Engineer (E2E) Community.*** Created to foster collaboration among engineers. At e2e.ti.com, you can ask questions, share knowledge, explore ideas and help solve problems with fellow engineers.

**Design Support** ***TI's Design Support*** Quickly find helpful E2E forums along with design support tools and contact information for technical support.

## 12.3 Trademarks

E2E is a trademark of Texas Instruments.
All other trademarks are the property of their respective owners.

## 12.4 Electrostatic Discharge Caution

These devices have limited built-in ESD protection. The leads should be shorted together or the device placed in conductive foam during storage or handling to prevent electrostatic damage to the MOS gates.

## 12.5 Glossary

SLYZ022 — *TI Glossary*.

This glossary lists and explains terms, acronyms, and definitions.

# 13 Mechanical, Packaging, and Orderable Information

The following pages include mechanical packaging and orderable information. This information is the most current data available for the designated devices. This data is subject to change without notice and revision of this document. For browser based versions of this data sheet, refer to the left hand navigation.


Copyright © 1995–2015, Texas Instruments Incorporated

## PACKAGING INFORMATION

| Orderable part number | Status (1) | Material type (2) | Package \| Pins | Package qty \| Carrier | RoHS (3) | Lead finish/ Ball material (4) | MSL rating/ Peak reflow (5) | Op temp (°C) | Part marking (6) |
|---|---|---|---|---|---|---|---|---|---|
| SN74CBT3251D | NRND | Production | SOIC (D) \| 16 | 40 \| TUBE | Yes | NIPDAU | Level-1-260C-UNLIM | -40 to 85 | CBT3251 |
| SN74CBT3251D.A | NRND | Production | SOIC (D) \| 16 | 40 \| TUBE | Yes | NIPDAU | Level-1-260C-UNLIM | -40 to 85 | CBT3251 |
| SN74CBT3251DBQR | NRND | Production | SSOP (DBQ) \| 16 | 2500 \| LARGE T&R | Yes | NIPDAU | Level-2-260C-1 YEAR | -40 to 85 | CU251 |
| SN74CBT3251DBQR.A | NRND | Production | SSOP (DBQ) \| 16 | 2500 \| LARGE T&R | Yes | NIPDAU | Level-2-260C-1 YEAR | -40 to 85 | CU251 |
| SN74CBT3251DBR | NRND | Production | SSOP (DB) \| 16 | 2000 \| LARGE T&R | Yes | NIPDAU | Level-1-260C-UNLIM | -40 to 85 | CU251 |
| SN74CBT3251DBR.A | NRND | Production | SSOP (DB) \| 16 | 2000 \| LARGE T&R | Yes | NIPDAU | Level-1-260C-UNLIM | -40 to 85 | CU251 |
| SN74CBT3251DR | Active | Production | SOIC (D) \| 16 | 2500 \| LARGE T&R | Yes | NIPDAU | Level-1-260C-UNLIM | -40 to 85 | CBT3251 |
| SN74CBT3251DR.A | Active | Production | SOIC (D) \| 16 | 2500 \| LARGE T&R | Yes | NIPDAU | Level-1-260C-UNLIM | -40 to 85 | CBT3251 |
| SN74CBT3251PW | NRND | Production | TSSOP (PW) \| 16 | 90 \| TUBE | Yes | NIPDAU | Level-1-260C-UNLIM | -40 to 85 | CU251 |
| SN74CBT3251PW.A | NRND | Production | TSSOP (PW) \| 16 | 90 \| TUBE | Yes | NIPDAU | Level-1-260C-UNLIM | -40 to 85 | CU251 |
| SN74CBT3251PWR | Active | Production | TSSOP (PW) \| 16 | 2000 \| LARGE T&R | Yes | NIPDAU | Level-1-260C-UNLIM | -40 to 85 | CU251 |
| SN74CBT3251PWR.A | Active | Production | TSSOP (PW) \| 16 | 2000 \| LARGE T&R | Yes | NIPDAU | Level-1-260C-UNLIM | -40 to 85 | CU251 |
| SN74CBT3251RGYR | Active | Production | VQFN (RGY) \| 16 | 3000 \| LARGE T&R | Yes | NIPDAU | Level-2-260C-1 YEAR | -40 to 85 | CU251 |
| SN74CBT3251RGYR.A | Active | Production | VQFN (RGY) \| 16 | 3000 \| LARGE T&R | Yes | NIPDAU | Level-2-260C-1 YEAR | -40 to 85 | CU251 |

(1) **Status:** For more details on status, see our product life cycle.

(2) **Material type:** When designated, preproduction parts are prototypes/experimental devices, and are not yet approved or released for full production. Testing and final process, including without limitation quality assurance, reliability performance testing, and/or process qualification, may not yet be complete, and this item is subject to further changes or possible discontinuation. If available for ordering, purchases will be subject to an additional waiver at checkout, and are intended for early internal evaluation purposes only. These items are sold without warranties of any kind.

(3) **RoHS values:** Yes, No, RoHS Exempt. See the TI RoHS Statement for additional information and value definition.

(4) **Lead finish/Ball material:** Parts may have multiple material finish options. Finish options are separated by a vertical ruled line. Lead finish/Ball material values may wrap to two lines if the finish value exceeds the maximum column width.

(5) **MSL rating/Peak reflow:** The moisture sensitivity level ratings and peak solder (reflow) temperatures. In the event that a part has multiple moisture sensitivity ratings, only the lowest level per JEDEC standards is shown. Refer to the shipping label for the actual reflow temperature that will be used to mount the part to the printed circuit board.

(6) **Part marking:** There may be an additional marking, which relates to the logo, the lot trace code information, or the environmental category of the part.

Multiple part markings will be inside parentheses. Only one part marking contained in parentheses and separated by a "~" will appear on a part. If a line is indented then it is a continuation of the previous line and the two combined represent the entire part marking for that device.

**Important Information and Disclaimer:**The information provided on this page represents TI's knowledge and belief as of the date that it is provided. TI bases its knowledge and belief on information provided by third parties, and makes no representation or warranty as to the accuracy of such information. Efforts are underway to better integrate information from third parties. TI has taken and continues to take reasonable steps to provide representative and accurate information but may not have conducted destructive testing or chemical analysis on incoming materials and chemicals. TI and TI suppliers consider certain information to be proprietary, and thus CAS numbers and other limited information may not be available for release.

In no event shall TI's liability arising out of such information exceed the total purchase price of the TI part(s) at issue in this document sold by TI to Customer on an annual basis.

## TAPE AND REEL INFORMATION

**REEL DIMENSIONS**

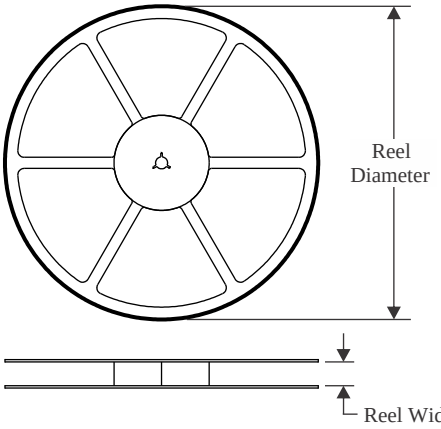


**TAPE DIMENSIONS**

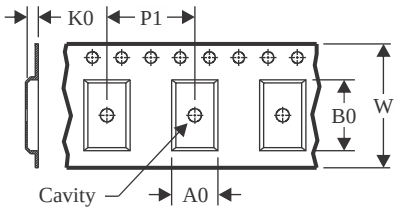


| | |
|---|---|
| A0 | Dimension designed to accommodate the component width |
| B0 | Dimension designed to accommodate the component length |
| K0 | Dimension designed to accommodate the component thickness |
| W | Overall width of the carrier tape |
| P1 | Pitch between successive cavity centers |

**QUADRANT ASSIGNMENTS FOR PIN 1 ORIENTATION IN TAPE**

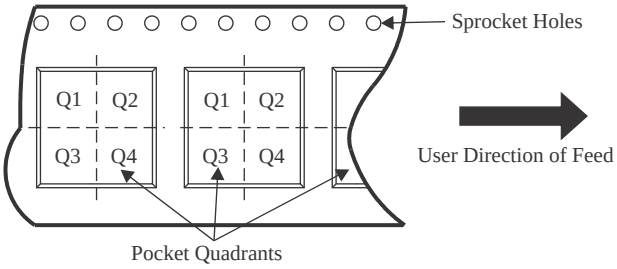


*All dimensions are nominal

| Device | Package Type | Package Drawing | Pins | SPQ | Reel Diameter (mm) | Reel Width W1 (mm) | A0 (mm) | B0 (mm) | K0 (mm) | P1 (mm) | W (mm) | Pin1 Quadrant |
|---|---|---|---|---|---|---|---|---|---|---|---|---|
| SN74CBT3251DBQR | SSOP | DBQ | 16 | 2500 | 330.0 | 12.5 | 6.4 | 5.2 | 2.1 | 8.0 | 12.0 | Q1 |
| SN74CBT3251DBR | SSOP | DB | 16 | 2000 | 330.0 | 16.4 | 8.35 | 6.6 | 2.4 | 12.0 | 16.0 | Q1 |
| SN74CBT3251DR | SOIC | D | 16 | 2500 | 330.0 | 16.4 | 6.5 | 10.3 | 2.1 | 8.0 | 16.0 | Q1 |
| SN74CBT3251PWR | TSSOP | PW | 16 | 2000 | 330.0 | 12.4 | 6.9 | 5.6 | 1.6 | 8.0 | 12.0 | Q1 |
| SN74CBT3251RGYR | VQFN | RGY | 16 | 3000 | 330.0 | 12.4 | 3.8 | 4.3 | 1.5 | 8.0 | 12.0 | Q1 |

TAPE AND REEL BOX DIMENSIONS

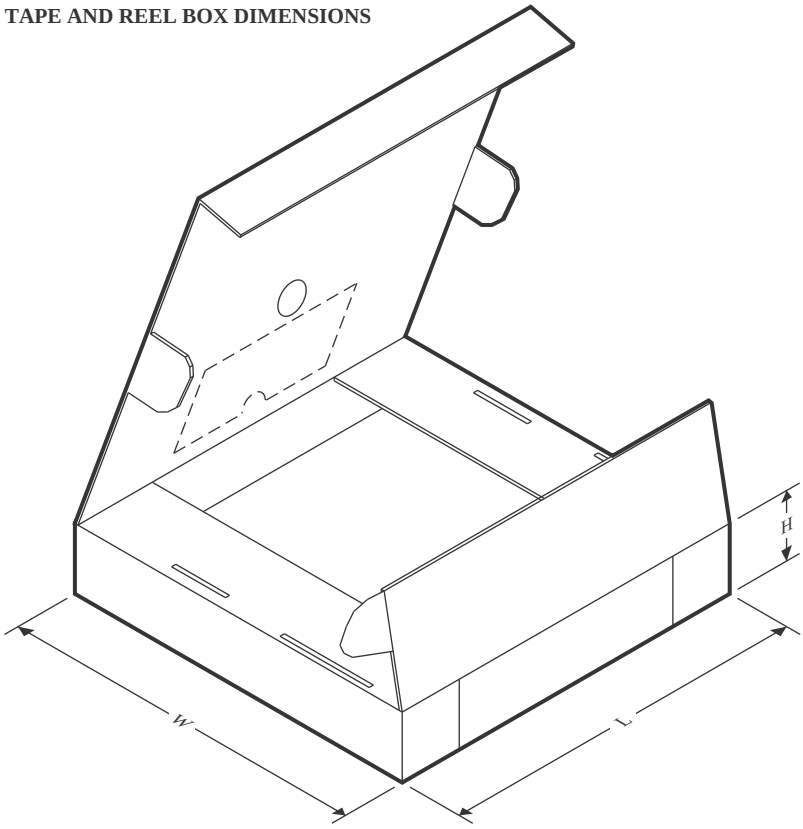


*All dimensions are nominal

| Device | Package Type | Package Drawing | Pins | SPQ | Length (mm) | Width (mm) | Height (mm) |
|---|---|---|---|---|---|---|---|
| SN74CBT3251DBQR | SSOP | DBQ | 16 | 2500 | 340.5 | 338.1 | 20.6 |
| SN74CBT3251DBR | SSOP | DB | 16 | 2000 | 356.0 | 356.0 | 35.0 |
| SN74CBT3251DR | SOIC | D | 16 | 2500 | 353.0 | 353.0 | 32.0 |
| SN74CBT3251PWR | TSSOP | PW | 16 | 2000 | 356.0 | 356.0 | 35.0 |
| SN74CBT3251RGYR | VQFN | RGY | 16 | 3000 | 367.0 | 367.0 | 35.0 |

## TUBE

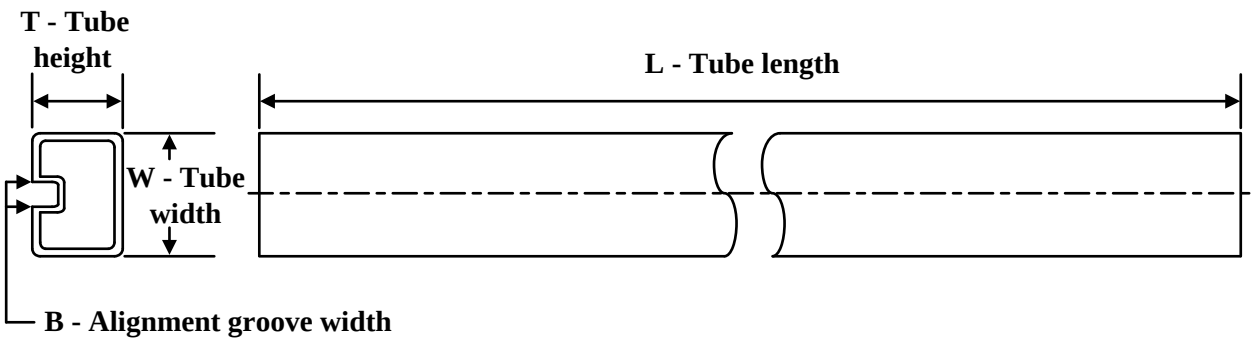


*All dimensions are nominal

| Device | Package Name | Package Type | Pins | SPQ | L (mm) | W (mm) | T (µm) | B (mm) |
|---|---|---|---|---|---|---|---|---|
| SN74CBT3251D | D | SOIC | 16 | 40 | 507 | 8 | 3940 | 4.32 |
| SN74CBT3251D.A | D | SOIC | 16 | 40 | 507 | 8 | 3940 | 4.32 |
| SN74CBT3251PW | PW | TSSOP | 16 | 90 | 530 | 10.2 | 3600 | 3.5 |
| SN74CBT3251PW.A | PW | TSSOP | 16 | 90 | 530 | 10.2 | 3600 | 3.5 |

D (R–PDSO–G16) PLASTIC SMALL OUTLINE

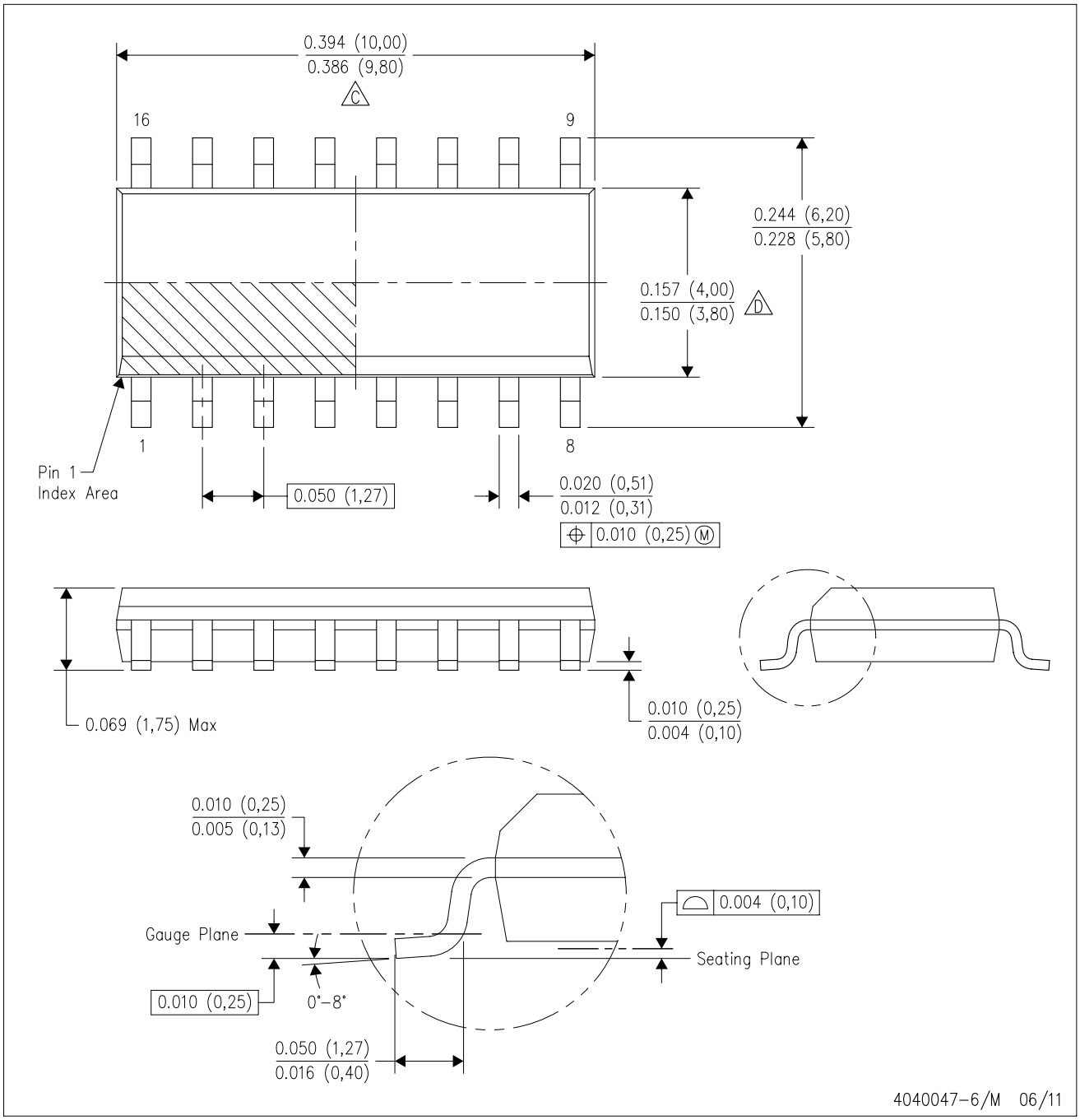


NOTES:
A. All linear dimensions are in inches (millimeters).
B. This drawing is subject to change without notice.
C. Body length does not include mold flash, protrusions, or gate burrs. Mold flash, protrusions, or gate burrs shall not exceed 0.006 (0,15) each side.
D. Body width does not include interlead flash. Interlead flash shall not exceed 0.017 (0,43) each side.
E. Reference JEDEC MS–012 variation AC.

# PW0016A

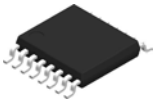

# PACKAGE OUTLINE

## TSSOP - 1.2 mm max height

SMALL OUTLINE PACKAGE

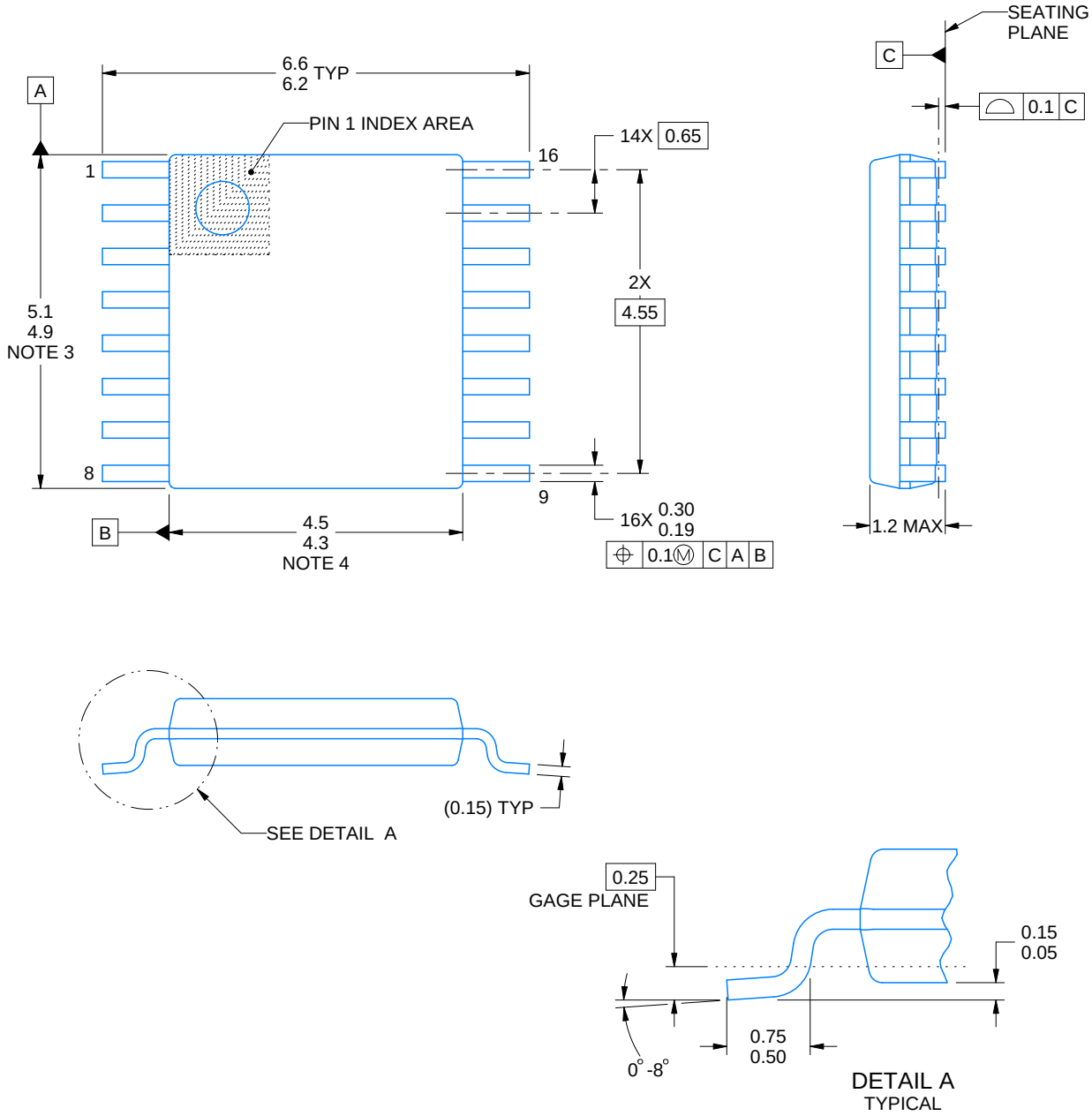


NOTES:

1. All linear dimensions are in millimeters. Any dimensions in parenthesis are for reference only. Dimensioning and tolerancing per ASME Y14.5M.
2. This drawing is subject to change without notice.
3. This dimension does not include mold flash, protrusions, or gate burrs. Mold flash, protrusions, or gate burrs shall not exceed 0.15 mm per side.
4. This dimension does not include interlead flash. Interlead flash shall not exceed 0.25 mm per side.
5. Reference JEDEC registration MO-153.

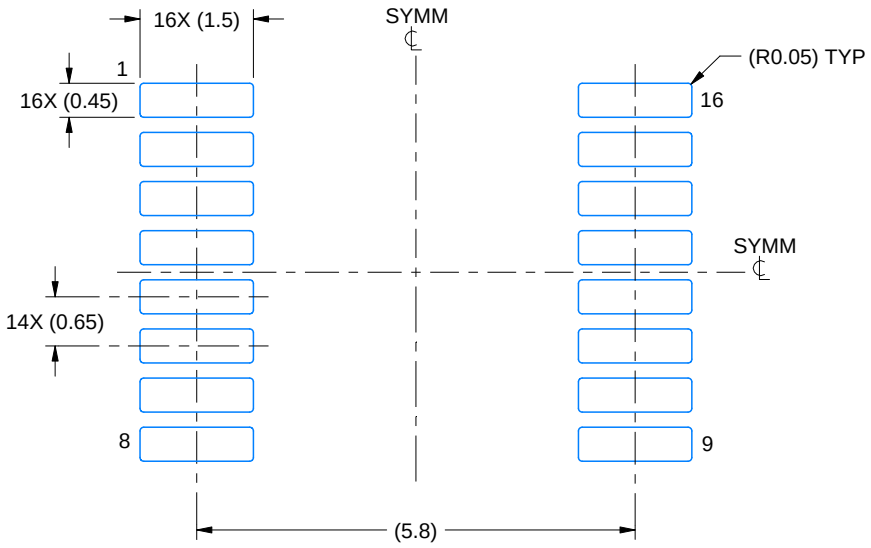


LAND PATTERN EXAMPLE
EXPOSED METAL SHOWN
SCALE: 10X

NON-SOLDER MASK DEFINED (PREFERRED)

SOLDER MASK DEFINED

SOLDER MASK DETAILS

4220204/A 02/2017

NOTES: (continued)

6. Publication IPC-7351 may have alternate designs.
7. Solder mask tolerances between and around signal pads can vary based on board fabrication site.

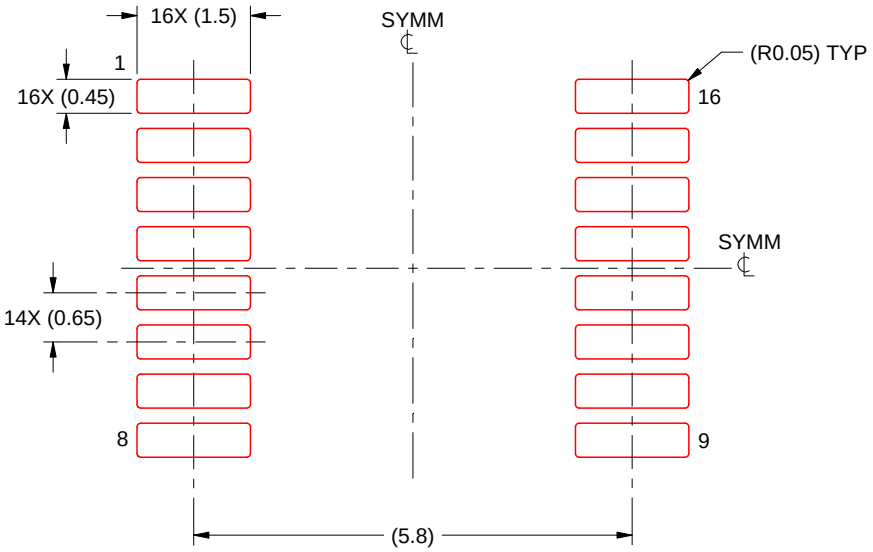


SOLDER PASTE EXAMPLE
BASED ON 0.125 mm THICK STENCIL
SCALE: 10X

4220204/A 02/2017

NOTES: (continued)

8. Laser cutting apertures with trapezoidal walls and rounded corners may offer better paste release. IPC-7525 may have alternate design recommendations.
9. Board assembly site may have different recommendations for stencil design.

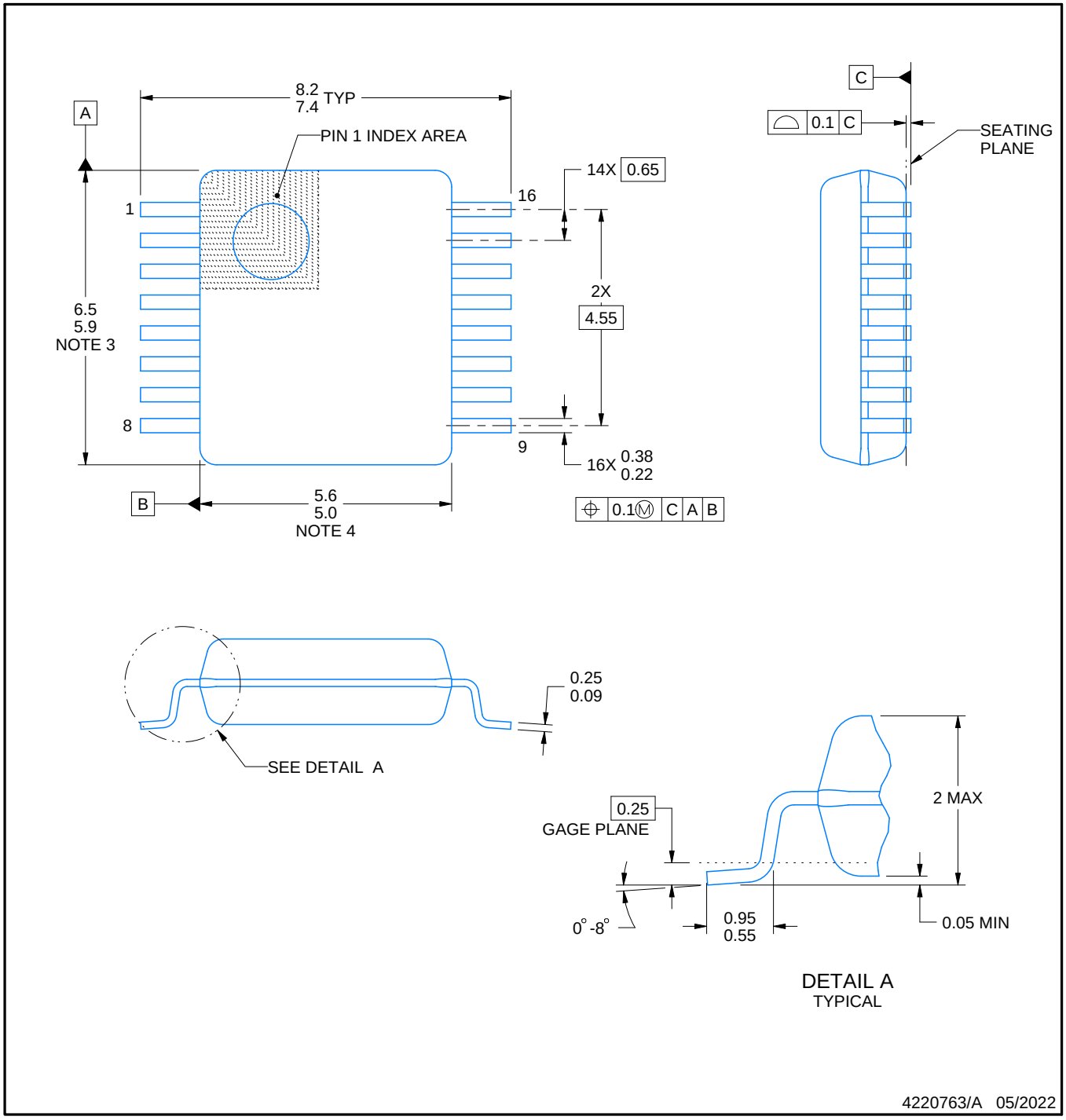


NOTES:

1. All linear dimensions are in millimeters. Any dimensions in parenthesis are for reference only. Dimensioning and tolerancing per ASME Y14.5M.
2. This drawing is subject to change without notice.
3. This dimension does not include mold flash, protrusions, or gate burrs. Mold flash, protrusions, or gate burrs shall not exceed 0.15 mm per side.
4. Reference JEDEC registration MO-150.

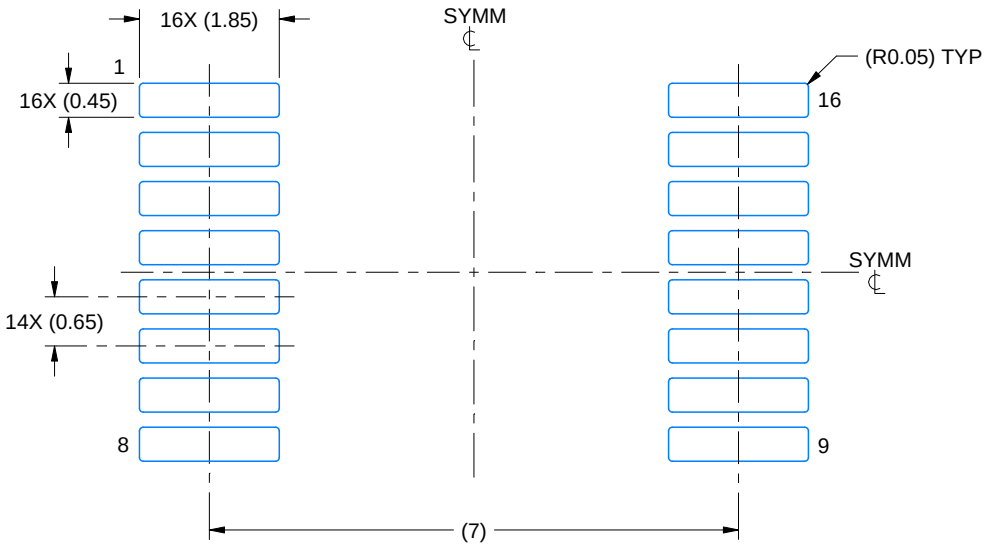


LAND PATTERN EXAMPLE
EXPOSED METAL SHOWN
SCALE: 10X

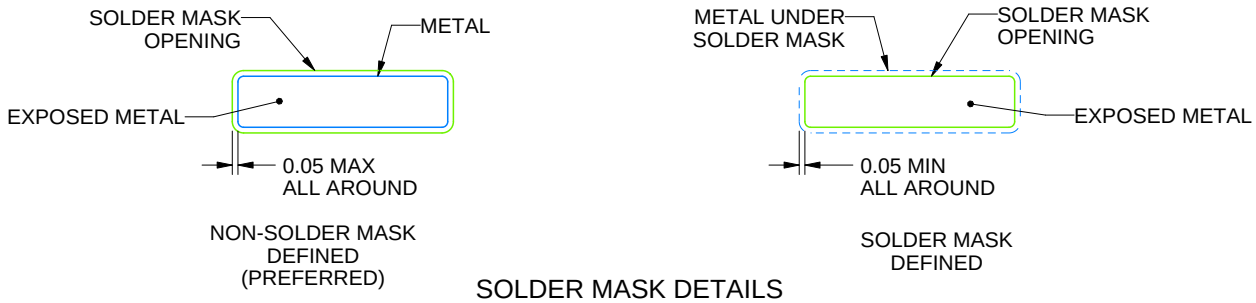


SOLDER MASK DETAILS

4220763/A 05/2022

NOTES: (continued)

5. Publication IPC-7351 may have alternate designs.
6. Solder mask tolerances between and around signal pads can vary based on board fabrication site.

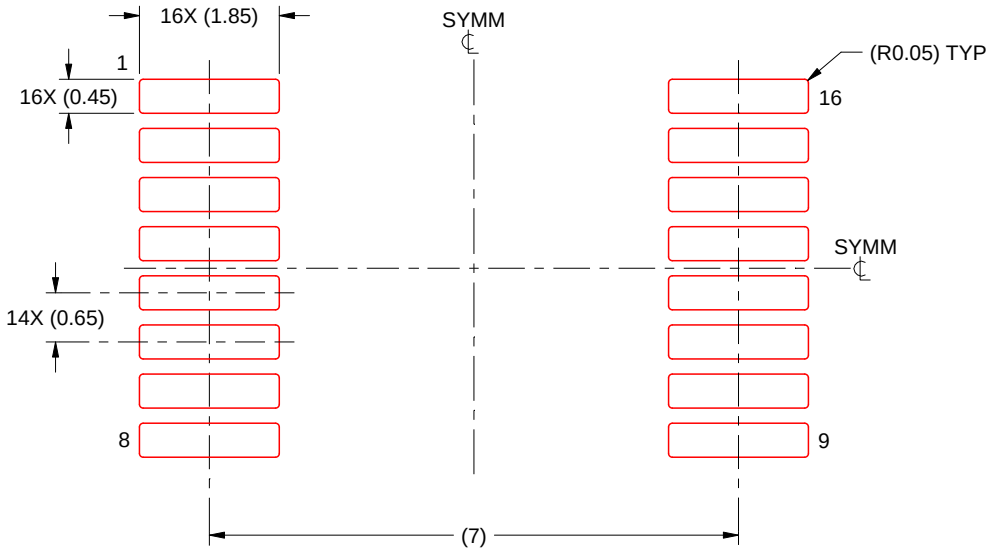


SOLDER PASTE EXAMPLE
BASED ON 0.125 mm THICK STENCIL
SCALE: 10X

4220763/A 05/2022

NOTES: (continued)

7. Laser cutting apertures with trapezoidal walls and rounded corners may offer better paste release. IPC-7525 may have alternate design recommendations.
8. Board assembly site may have different recommendations for stencil design.

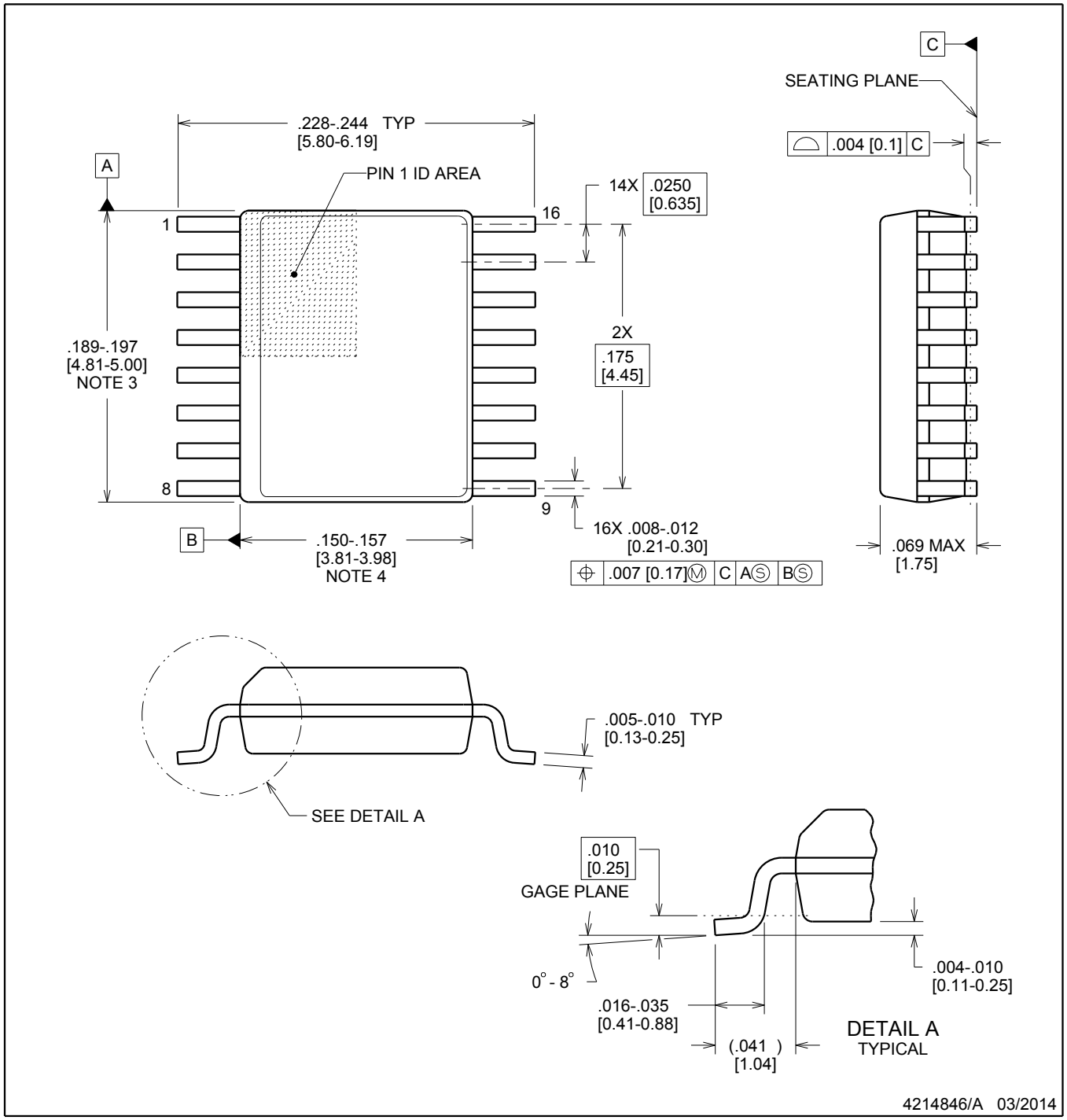


NOTES:

1. Linear dimensions are in inches [millimeters]. Dimensions in parenthesis are for reference only. Controlling dimensions are in inches. Dimensioning and tolerancing per ASME Y14.5M.
2. This drawing is subject to change without notice.
3. This dimension does not include mold flash, protrusions, or gate burrs. Mold flash, protrusions, or gate burrs shall not exceed .006 inch, per side.
4. This dimension does not include interlead flash.
5. Reference JEDEC registration MO-137, variation AB.

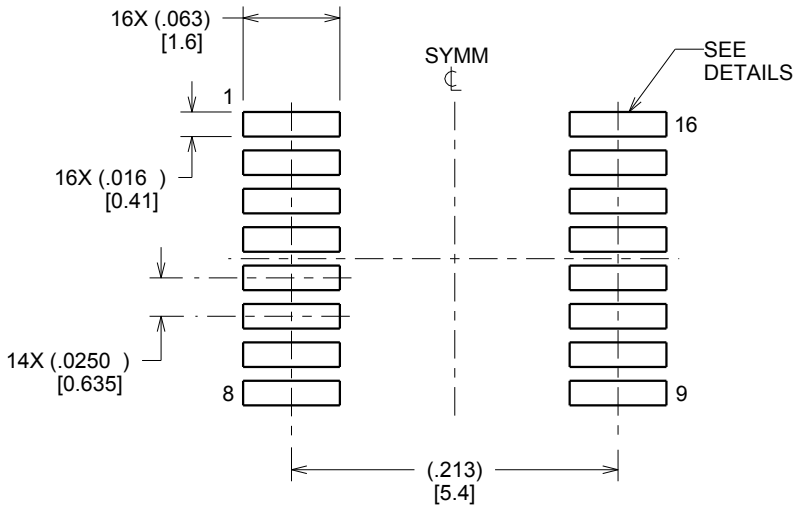


LAND PATTERN EXAMPLE
SCALE:8X

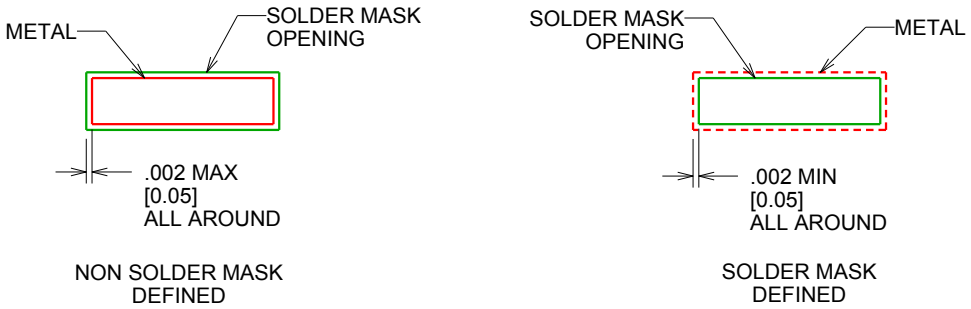


SOLDER MASK DETAILS

4214846/A 03/2014

NOTES: (continued)

6. Publication IPC-7351 may have alternate designs.
7. Solder mask tolerances between and around signal pads can vary based on board fabrication site.

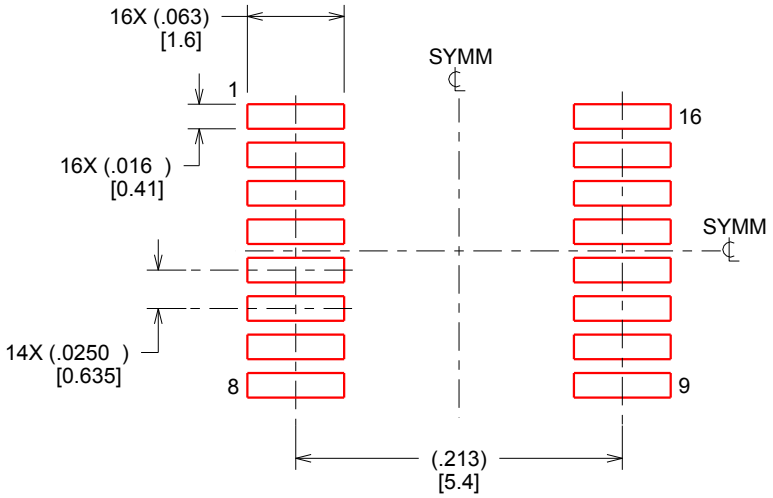


SOLDER PASTE EXAMPLE
BASED ON .005 INCH [0.127 MM] THICK STENCIL
SCALE:8X

4214846/A 03/2014

NOTES: (continued)

8. Laser cutting apertures with trapezoidal walls and rounded corners may offer better paste release. IPC-7525 may have alternate design recommendations.
9. Board assembly site may have different recommendations for stencil design.

RGY (R-PVQFN-N16) PLASTIC QUAD FLATPACK NO-LEAD

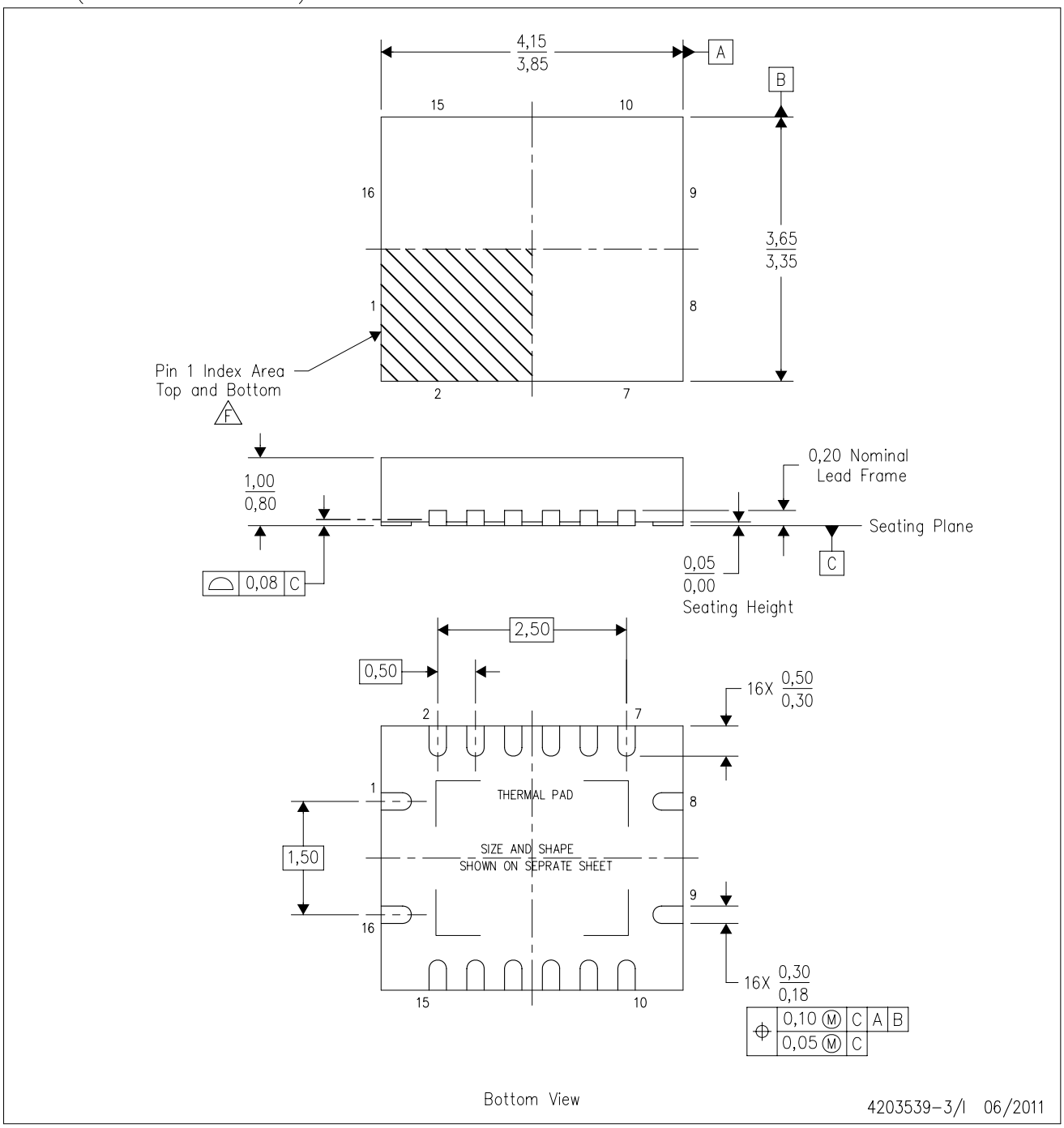


NOTES:
- A. All linear dimensions are in millimeters. Dimensioning and tolerancing per ASME Y14.5M-1994.
- B. This drawing is subject to change without notice.
- C. QFN (Quad Flatpack No-Lead) package configuration.
- D. The package thermal pad must be soldered to the board for thermal and mechanical performance.
- E. See the additional figure in the Product Data Sheet for details regarding the exposed thermal pad features and dimensions.
- F. Pin 1 identifiers are located on both top and bottom of the package and within the zone indicated. The Pin 1 identifiers are either a molded, marked, or metal feature.
- G. Package complies to JEDEC MO-241 variation BA.

RGY (R–PVQFN–N16) PLASTIC QUAD FLATPACK NO–LEAD

THERMAL INFORMATION

This package incorporates an exposed thermal pad that is designed to be attached directly to an external heatsink. The thermal pad must be soldered directly to the printed circuit board (PCB). After soldering, the PCB can be used as a heatsink. In addition, through the use of thermal vias, the thermal pad can be attached directly to the appropriate copper plane shown in the electrical schematic for the device, or alternatively, can be attached to a special heatsink structure designed into the PCB. This design optimizes the heat transfer from the integrated circuit (IC).

For information on the Quad Flatpack No–Lead (QFN) package and its advantages, refer to Application Report, QFN/SON PCB Attachment, Texas Instruments Literature No. SLUA271. This document is available at www.ti.com.

The exposed thermal pad dimensions for this package are shown in the following illustration.

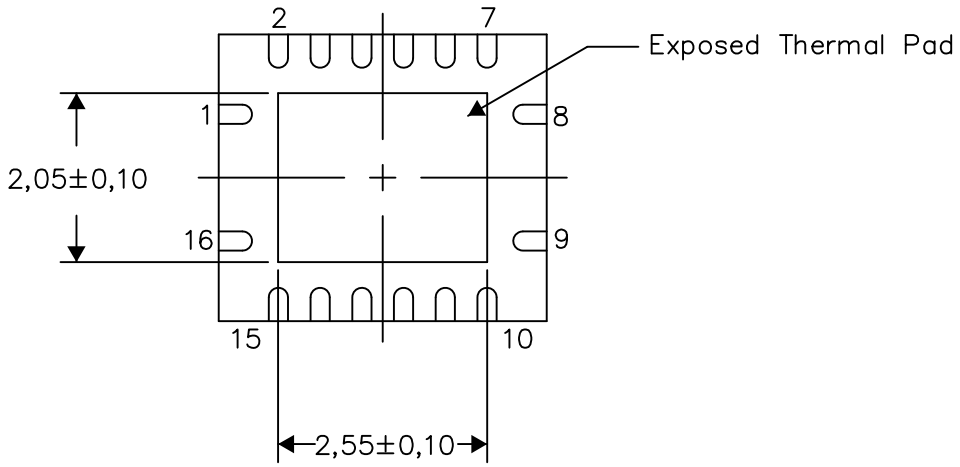


Bottom View

Exposed Thermal Pad Dimensions

4206353–3/P 03/14

NOTE: All linear dimensions are in millimeters

RGY (R–PVQFN–N16) PLASTIC QUAD FLATPACK NO–LEAD

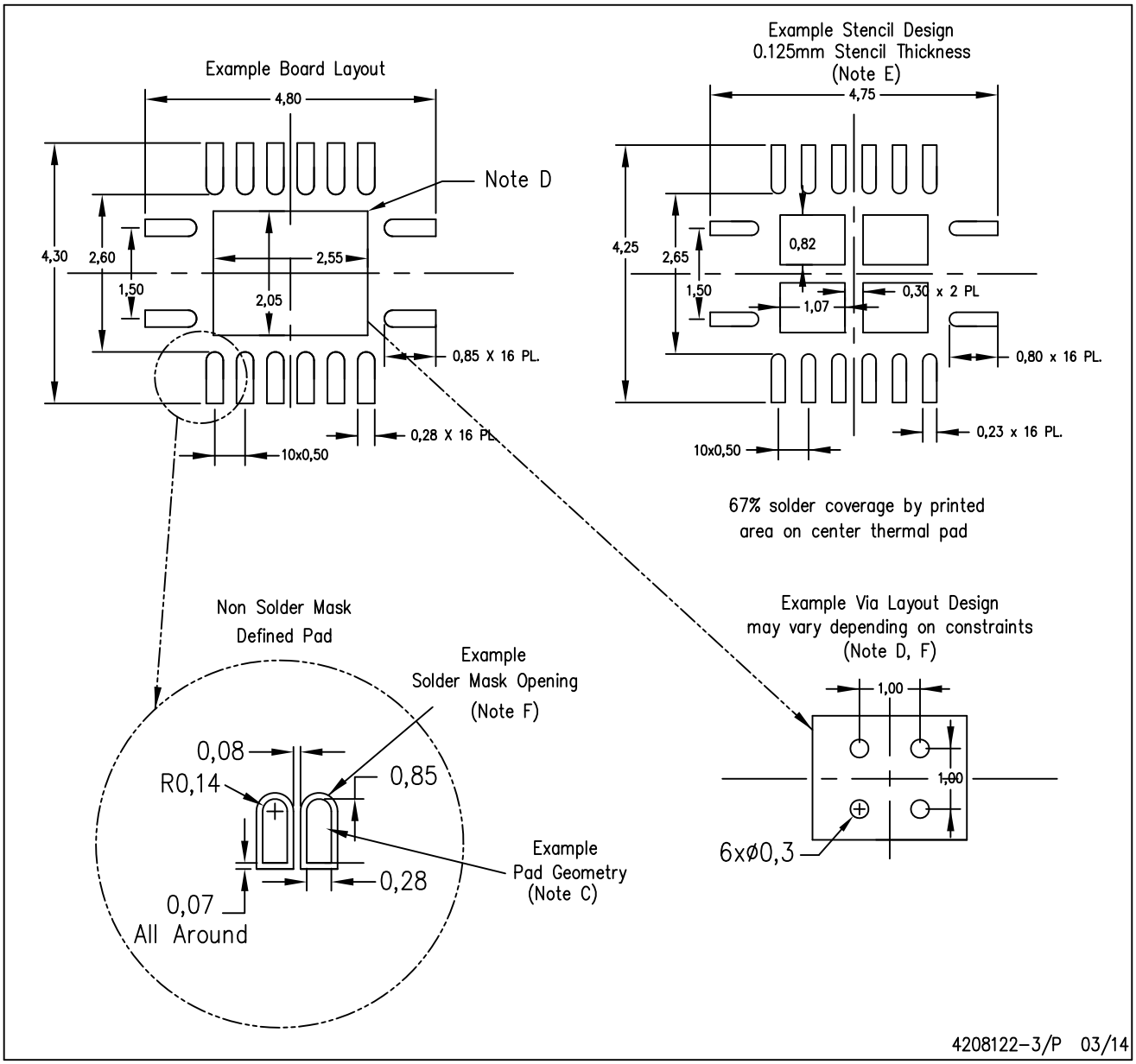


NOTES:
A. All linear dimensions are in millimeters.
B. This drawing is subject to change without notice.
C. Publication IPC–7351 is recommended for alternate designs.
D. This package is designed to be soldered to a thermal pad on the board. Refer to Application Note, Quad Flat–Pack QFN/SON PCB Attachment, Texas Instruments Literature No. SLUA271, and also the Product Data Sheets for specific thermal information, via requirements, and recommended board layout. These documents are available at www.ti.com <http://www.ti.com>.
E. Laser cutting apertures with trapezoidal walls and also rounding corners will offer better paste release. Customers should contact their board assembly site for stencil design recommendations. Refer to IPC 7525 for stencil design considerations.
F. Customers should contact their board fabrication site for minimum solder mask web tolerances between signal pads.

# IMPORTANT NOTICE AND DISCLAIMER

TI PROVIDES TECHNICAL AND RELIABILITY DATA (INCLUDING DATA SHEETS), DESIGN RESOURCES (INCLUDING REFERENCE DESIGNS), APPLICATION OR OTHER DESIGN ADVICE, WEB TOOLS, SAFETY INFORMATION, AND OTHER RESOURCES “AS IS” AND WITH ALL FAULTS, AND DISCLAIMS ALL WARRANTIES, EXPRESS AND IMPLIED, INCLUDING WITHOUT LIMITATION ANY IMPLIED WARRANTIES OF MERCHANTABILITY, FITNESS FOR A PARTICULAR PURPOSE OR NON-INFRINGEMENT OF THIRD PARTY INTELLECTUAL PROPERTY RIGHTS.

These resources are intended for skilled developers designing with TI products. You are solely responsible for (1) selecting the appropriate TI products for your application, (2) designing, validating and testing your application, and (3) ensuring your application meets applicable standards, and any other safety, security, regulatory or other requirements.

These resources are subject to change without notice. TI grants you permission to use these resources only for development of an application that uses the TI products described in the resource. Other reproduction and display of these resources is prohibited. No license is granted to any other TI intellectual property right or to any third party intellectual property right. TI disclaims responsibility for, and you will fully indemnify TI and its representatives against, any claims, damages, costs, losses, and liabilities arising out of your use of these resources.

TI’s products are provided subject to TI’s Terms of Sale or other applicable terms available either on ti.com or provided in conjunction with such TI products. TI’s provision of these resources does not expand or otherwise alter TI’s applicable warranties or warranty disclaimers for TI products.

TI objects to and rejects any additional or different terms you may have proposed.

Mailing Address: Texas Instruments, Post Office Box 655303, Dallas, Texas 75265
Copyright © 2025, Texas Instruments Incorporated