TEXAS INSTRUMENTS
Data sheet acquired from Harris Semiconductor
SCHS095B – Revised July 2003

CD40102B, CD40103B Types

CMOS 8-Stage Presettable Synchronous Down Counters

High-Voltage Types (20-Volt Rating)

CD40102B – 2-Decade BCD Type
CD40103B – 8-Bit Binary Type

■ CD40102B, and CD40103B consist of an 8-stage synchronous down counter with a single output which is active when the internal count is zero. The CD40102B is configured as two cascaded 4-bit BCD counters, and the CD40103B contains a single 8-bit binary counter. Each type has control inputs for enabling or disabling the clock, for clearing the counter to its maximum count, and for presetting the counter either synchronously or asynchronously. All control inputs and the CARRY-OUT/ZERO-DETECT output are active-low logic.

In normal operation, the counter is decremented by one count on each positive transition of the CLOCK. Counting is inhibited when the CARRY-IN/COUNTER ENABLE ($\overline{CI/CE}$) input is high. The CARRY-OUT/ZERO-DETECT ($\overline{CO/ZD}$) output goes low when the count reaches zero if the $\overline{CI/CE}$ input is low, and remains low for one full clock period.

When the SYNCHRONOUS PRESET-ENABLE ($\overline{SPE}$) input is low, data at the JAM input is clocked into the counter on the next positive clock transition regardless of the state of the $\overline{CI/CE}$ input. When the ASYNCHRONOUS PRESET-ENABLE ($\overline{APE}$) input is low, data at the JAM inputs is asynchronously forced into the counter regardless of the state of the $\overline{SPE}$, $\overline{CI/CE}$, or CLOCK inputs. JAM inputs JO-J7 represent two 4-bit BCD words for the CD40102B and a single 8-bit binary word for the CD40103B.

When the CLEAR ($\overline{CLR}$) input is low, the counter is asynchronously cleared to its maximum count (99_{10} for the CD40102B and 255_{10} for the CD40103B) regardless of the state of any other input. The precedence relationship between control inputs is indicated in the truth table.

If all control inputs except $\overline{CI/CE}$ are high at the time of zero count, the counters will jump to the maximum count, giving a counting sequence of 100 or 256 clock pulses long.

This causes the $\overline{CO/ZD}$ output to go low to enable the clock on each succeeding clock pulse.

The CD40102B and CD40103B may be cascaded using the $\overline{CI/CE}$ input and the $\overline{CO/ZD}$ output, in either a synchronous or ripple mode as shown in Figs.21 and 22.

The CD40102B and CD40103B types are supplied in 16-lead dual-in-line plastic packages (E suffix), 16-lead small-outline packages (NSR suffix), and 16-lead thin shrink small-outline packages (PW and PWR suffixes). The CD40103B types also are supplied in 16-lead hermetic dual-in-line ceramic packages (F3A suffix).

Features:

- **Synchronous or asynchronous preset**
- **Medium-speed operation: f_{CL} = 3.6 MHz (typ.) @ V_{DD} = 10 V**
- **Cascadable**
- **100% tested for quiescent current at 20 V**
- **Maximum input current of 1 μA at 18 V over full package-temperature range; 100 nA at 18 V and 25°C**
- **Noise margin (full package-temperature range) = 1 V at V_{DD} = 5 V; 2 V at V_{DD} = 10 V; 2.5 V at V_{DD} = 15 V**
- **Standardized, symmetrical output characteristics**
- **5-V, 10-V, and 15-V parametric ratings**
- **Meets all requirements of JEDEC Tentative Standard No. 13B, "Standard Specifications for Description of 'B' Series CMOS Devices"**

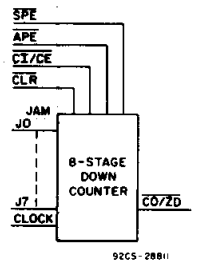

CD40102B, CD40103B FUNCTIONAL DIAGRAM

Applications:

- **Divide-by-"N" counters**
- **Programmable timers**
- **Interrupt timers**
- **Cycle/program counter**

RECOMMENDED OPERATING CONDITIONS AT T_A = 25°C, Unless Otherwise Specified

For maximum reliability, nominal operating conditions should be selected so that operation is always within the following ranges.

Characteristic	V_{DD}	LIMITS Min.	LIMITS Max.	Units
Supply Voltage Range (At T_A = Full Package-Temperature Range)		3	18	V
Clock Pulse Width, t_W	5	300	–	ns
	10	180	–	
	15	80	–	
$\overline{Clear}$ Pulse Width, t_W	5	320	–	ns
	10	160	–	
	15	100	–	
$\overline{APE}$ Pulse Width, t_W	5	360	–	ns
	10	160	–	
	15	120	–	
Clock Input Frequency, f_{CL}	5	–	0.7	MHz
	10	–	1.8	
	15	–	2.4	
Clock Rise and Fall Time, t_rCL, t_fCL	5	–	15	μs
	10	–		
	15	–		
$\overline{SPE}$ Setup Time, t_{SU}	5	280	–	ns
	10	140	–	
	15	100	–	
Jam Setup Time, t_{SU}	5	200	–	ns
	10	80	–	
	15	60	–	
$\overline{CI/CE}$ Setup Time, t_{SU}	5	500	–	ns
	10	250	–	
	15	150	–	

Copyright © 2003, Texas Instruments Incorporated

MAXIMUM RATINGS, *Absolute-Maximum Values:*

DC SUPPLY-VOLTAGE RANGE, (V_{DD})
Voltages referenced to V_{SS} Terminal) ..... -0.5V to +20V
INPUT VOLTAGE RANGE, ALL INPUTS ..... -0.5V to V_{DD} +0.5V
DC INPUT CURRENT, ANY ONE INPUT ..... ±10mA
POWER DISSIPATION PER PACKAGE (P_D):
For T_A = -55°C to +100°C 500mW
For T_A = +100°C to +125°C ..... Derate Linearity at 12mW/°C to 200mW
DEVICE DISSIPATION PER OUTPUT TRANSISTOR
FOR T_A = FULL PACKAGE-TEMPERATURE RANGE (All Package Types) 100mW
OPERATING-TEMPERATURE RANGE (T_A) ..... -55°C to +125°C
STORAGE TEMPERATURE RANGE (T_{stg}) ..... -65°C to +150°C
LEAD TEMPERATURE (DURING SOLDERING):
At distance 1/16 ± 1/32 inch (1.59 ± 0.79mm) from case for 10s max ..... +265°C

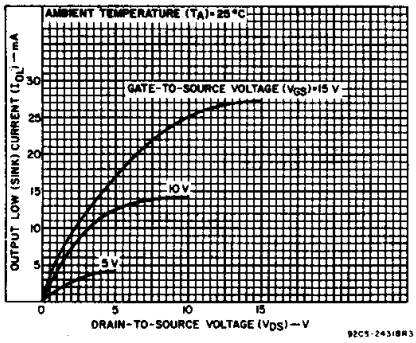

Fig. 1 — Typical output low (sink) current characteristics.

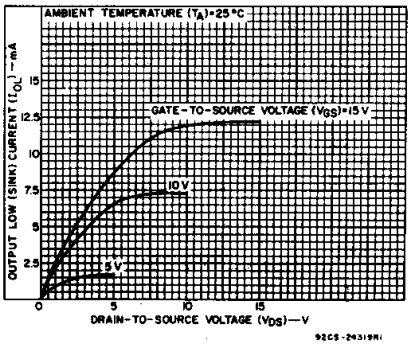

Fig. 2 — Minimum output low (sink) current characteristics.

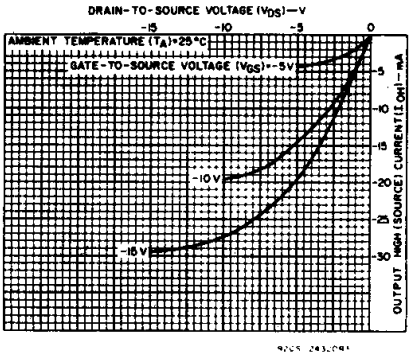

Fig. 3 — Typical output high (source) current characteristics.

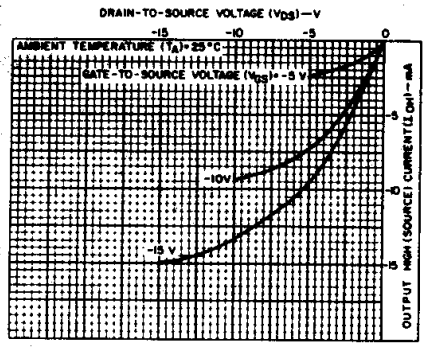

Fig. 4 — Minimum output high (source) current characteristics.

STATIC ELECTRICAL CHARACTERISTICS

CHARACTERISTIC	CONDITIONS			LIMITS AT INDICATED TEMPERATURES (°C)							UNITS
	V_O (V)	V_{IN} (V)	V_{DD} (V)	-55	-40	+85	+125	+25 Min.	+25 Typ.	+25 Max.	
Quiescent Device Current, I_{DD} Max.	–	0,5	5	5	5	150	150	–	0.04	5	μA
	–	0,10	10	10	10	300	300	–	0.04	10	
	–	0,15	15	20	20	600	600	–	0.04	20	
	–	0,20	20	100	100	3000	3000	–	0.08	100	
Output Low (Sink) Current I_{OL} Min.	0.4	0,5	5	0.64	0.61	0.42	0.36	0.51	1	–	mA
	0.5	0,10	10	1.6	1.5	1.1	0.9	1.3	2.6	–	
	1.5	0,15	15	4.2	4	2.8	2.4	3 4	6.8	–	
Output High (Source) Current, I_{OH} Min.	4.6	0,5	5	-0.64	-0.61	-0.42	-0.36	-0.51	-1	–	
	2.5	0,5	5	-2	-1.8	-1.3	-1.15	-1.6	-3.2	–	
	9.5	0,10	10	-1.6	-1.5	-1.1	-0.9	-1.3	-2.6	–	
	13.5	0,15	15	-4.2	-4	-2.8	-2.4	-3.4	-6.8	–	
Output Voltage: Low-Level, V_{OL} Max.	–	0,5	5	0.05				–	0	0.05	V
	–	0,10	10	0.05				–	0	0.05	
	–	0,15	15	0.05				–	0	0.05	
Output Voltage: High-Level, V_{OH} Min.	–	0,5	5	4.95				4.95	5	–	
	–	0,10	10	9.95				9.95	10	–	
	–	0,15	15	14.95				14.95	15	–	
Input Low Voltage, V_{IL} Max.	0.5, 4.5	–	5	1.5				—	—	1.5	V
	1, 9	–	10	3				—	—	3	
	1.5,13.5	–	15	4				—	—	4	
Input High Voltage, V_{IH} Min.	0.5, 4.5	–	5	3.5				3.5	—	—	
	1, 9	–	10	7				7	—	—	
	1.5,13.5	-	15	11				11	—	—	
Input Current I_{IN} Max.	–	0,18	18	±0.1	±0.1	±1	±1	–	$\pm 10^{-5}$	±0.1	μA

Note 1: These parameters and limits also apply to the Synchronous Preset Mode should a Preset condition of JAM Zero on J_0 to J_7 exist.

DYNAMIC ELECTRICAL CHARACTERISTICS at $T_A = 25°C$, $C_L = 50$ pF, Input t_r, $t_f = 20$ ns, $R_L = 200$ kΩ

Characteristic	Conditions V_{DD} (V)	Limits All Packages Min.	Typ.	Max.	Units
Propagation Delay Time (t_{PHL}, t_{PLH}): Clock-to-Output (See Fig. 6) Note 1	5	–	300	600	ns
	10	–	130	260	
	15	–	95	190	
Carry In/Counter Enable-to-Output	5	–	200	400	
	10	–	90	180	
	15	–	65	130	
Asynchronous Preset Enable-to-Output Note 1	5	–	650	1300	
	10	–	300	600	
	15	–	200	400	
$\overline{\text{Clear}}$-to-Output	5	–	375	750	
	10	–	180	360	
	15	–	100	200	
Transition Time (t_{THL}, t_{TLH})	5	–	100	200	ns
	10	–	50	100	
	15	–	40	80	
Minimum Clock Pulse Width, (t_W)	5	–	150	300	ns
	10	–	90	180	
	15	–	40	80	
Minimum $\overline{\text{CLR}}$ Pulse Width (t_W)	5	–	160	320	
	10	–	80	160	
	15	–	50	100	
Minimum $\overline{\text{APE}}$ Pulse Width (t_W)	5	–	180	360	
	10	–	80	160	
	15	–	60	120	
Minimum $\overline{\text{APE}}$ Removal Time (t_{RM})	5	–	110	220	
	10	–	50	100	
	15	–	35	70	
Minimum $\overline{\text{SPE}}$ Set-Up Time (t_{SU})	5	–	140	280	
	10	–	70	140	
	15	–	50	100	
Minimum $\overline{\text{CI/CE}}$ Setup Time (t_{SU})	5	–	250	500	
	10	–	125	250	
	15	–	75	150	
Minimum JAM Set-Up Time (t_{SU}) (Synchronous presetting)	5	–	100	200	
	10	–	40	80	
	15	–	30	60	
Maximum Clock Input Frequency (f_{CL}) (See Fig. 7)	5	0.7	1.4	–	MHz
	10	1.8	3.6	–	
	15	2.4	4.8	–	
Input Capacitance (C_{IN})		–	5	7.5	pF

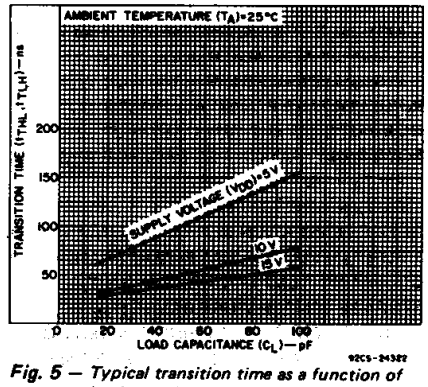

Fig. 5 — Typical transition time as a function of load capacitance.

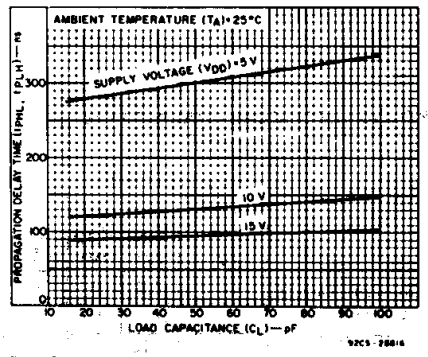

Fig. 6 — Typical propagation delay time as a function of load capacitance (clock to CO/ZD).

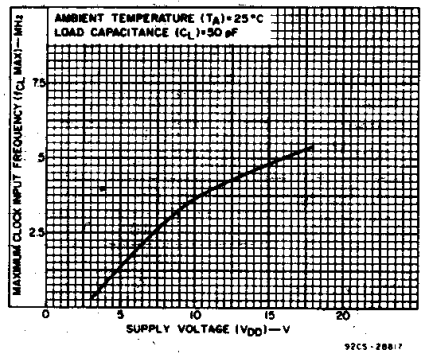

Fig. 7 — Typical maximum clock input frequency as a function of supply voltage.

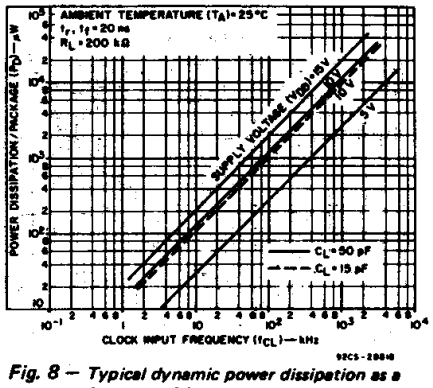

Fig. 8 — Typical dynamic power dissipation as a function of frequency.

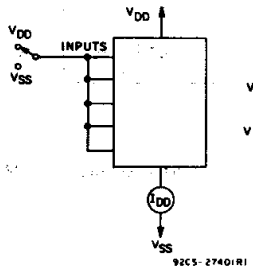

Fig. 9 — Quiescent device current test circuit.

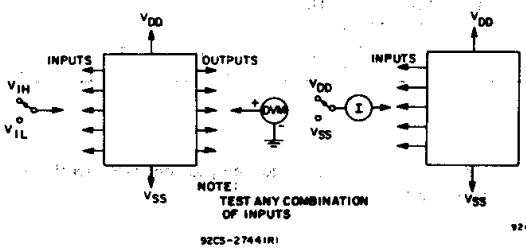

Fig. 10 — Input voltage test circuit.

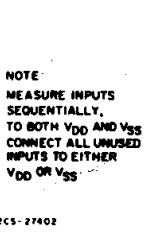

Fig. 11 — Input current test circuit.

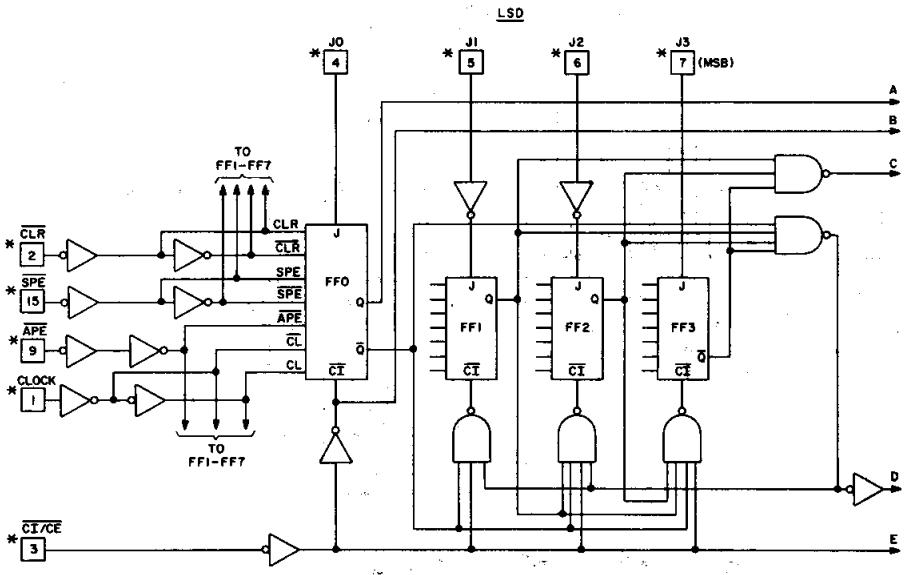

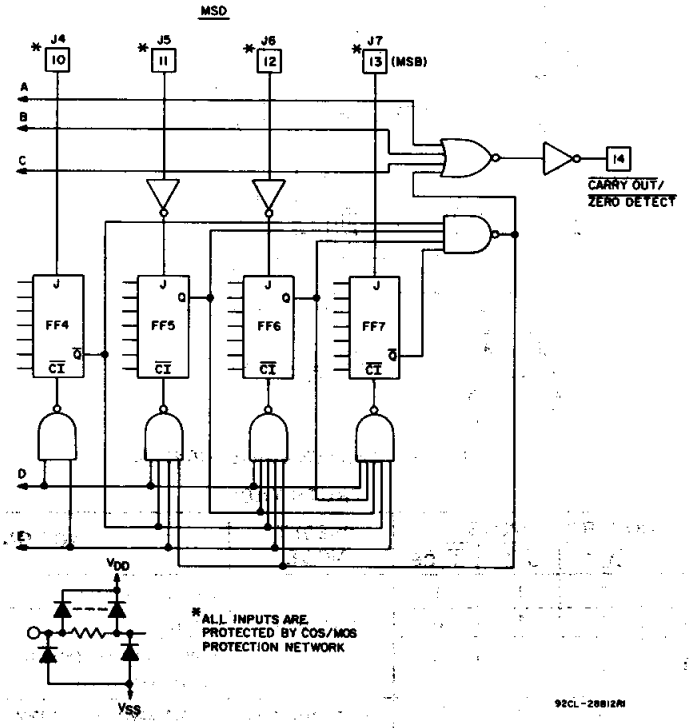

Fig. 12 – Logic diagram for CD40102B.

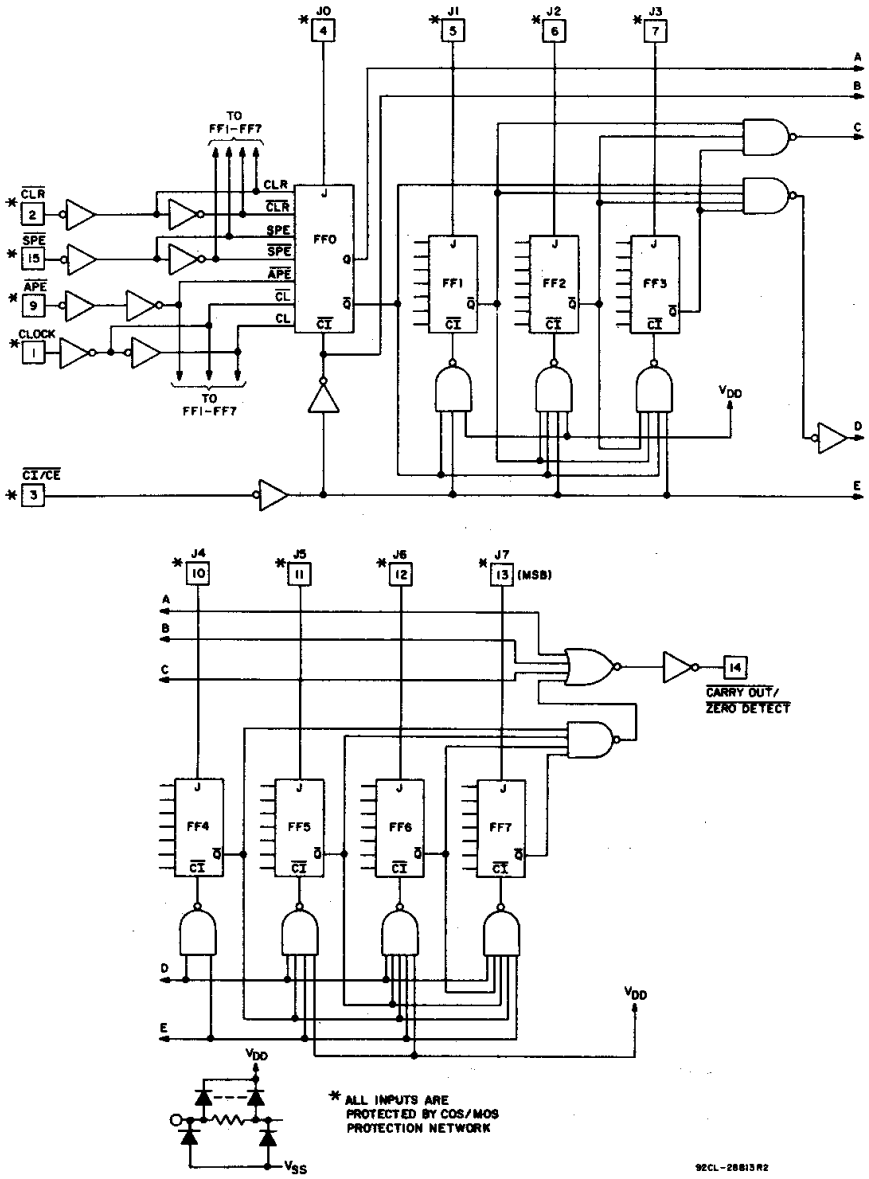

Fig. 13 — Logic diagram for CD40103B.

TRUTH TABLE

CONTROL INPUTS				PRESET MODE	ACTION
$\overline{CLR}$	$\overline{APE}$	$\overline{SPE}$	$\overline{CI/CE}$		
1	1	1	1	Synchronous	Inhibit counter
1	1	1	0		Count down*
1	1	0	X		Preset on next positive clock transition
1	0	X	X	Asynchronous	Preset asynchronously
0	X	X	X		Clear to maximum count

Notes: 1. 0 = Low level
1 = High level
X = Don't care

2. Clock connected to clock input
3. Synchronous operation: changes occur on negative-to-positive clock transitions
4. JAM inputs: CD40102B BCD; MSD = J7,J6,J5,J4 (J7 is MSB)
LSD = J3,J2,J1,J0 (J3 is MSB)
CD40103B Binary; MSB = J7, LSB = J0

*At zero count, the counters will jump to the maximum count on the next clock transition to "High."

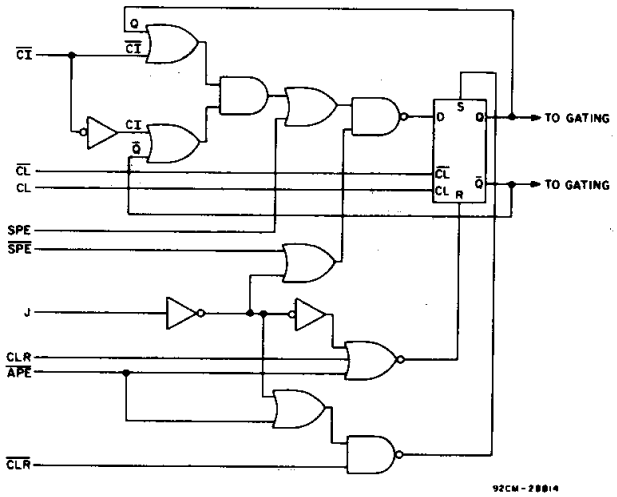

Fig. 14 — Detail logic diagram for flip-flops, FF0 – FF7, used in logic diagrams for CD40102B and CD40103B.

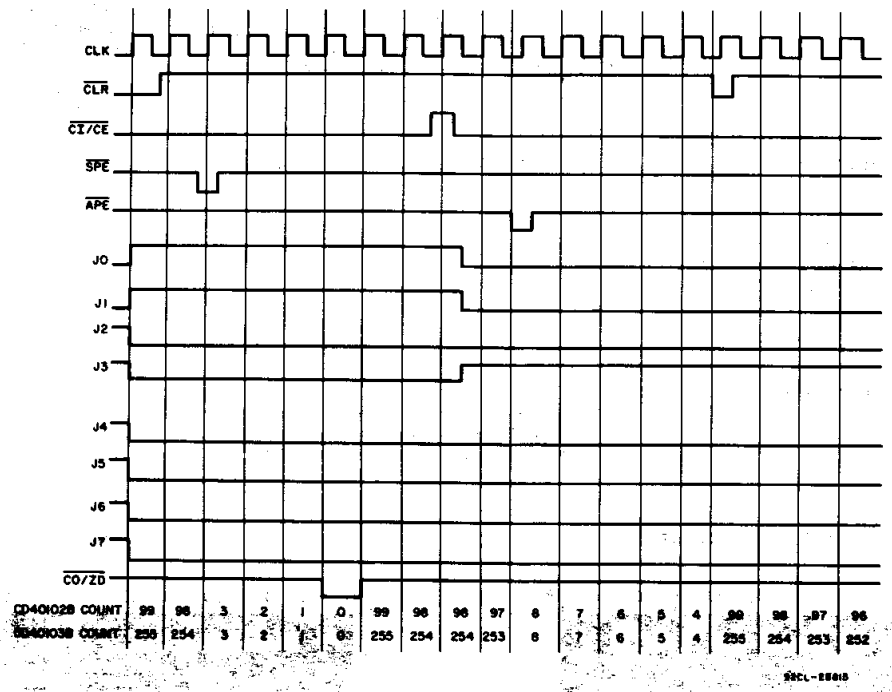

Fig. 15 — Timing diagram for CD40102B and CD40103B.

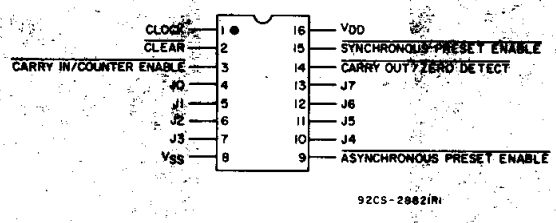

CD40102B, CD40103B

TERMINAL ASSIGNMENT

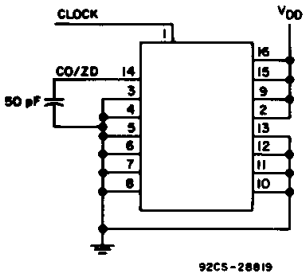

Fig.16 – Maximum clock frequency test circuit.

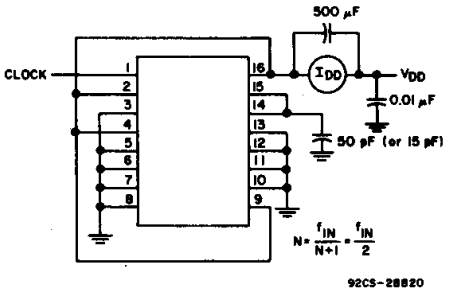

Fig.17 – Dynamic power dissipation test circuit (÷2 mode).

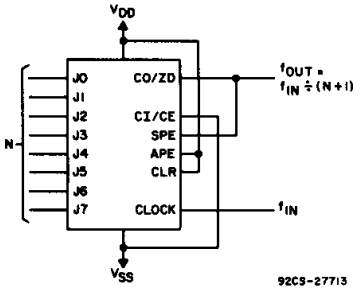

Fig.18 – Divide-by-"N" counter.

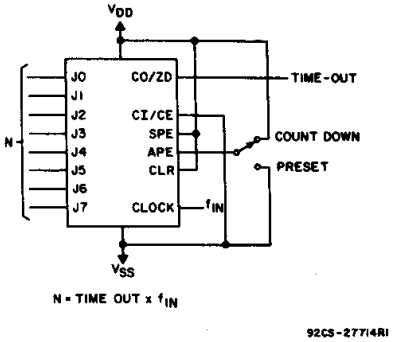

Fig.19 – Programmable timer.

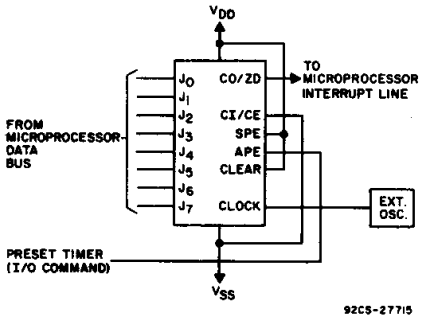

Fig.20 – Microprocessor interrupt timer.

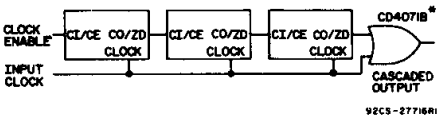

* An output spike (160 ns @ V_{DD} = 5 V) occurs whenever two or more devices are cascaded in the parallel-clocked mode because the clock-to-carry out delay is greater than the carry-in-to-carry out delay. This spike is eliminated by gating the output of the last device with the clock as shown.

Fig.21 – Synchronous cascading.

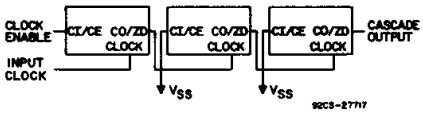

Fig.22 – Ripple cascading.

Dimensions in parentheses are in millimeters and are derived from the basic inch dimensions as indicated. Grid graduations are in mils (10^{-3} inch).

Dimensions and pad layout for CD40102B.

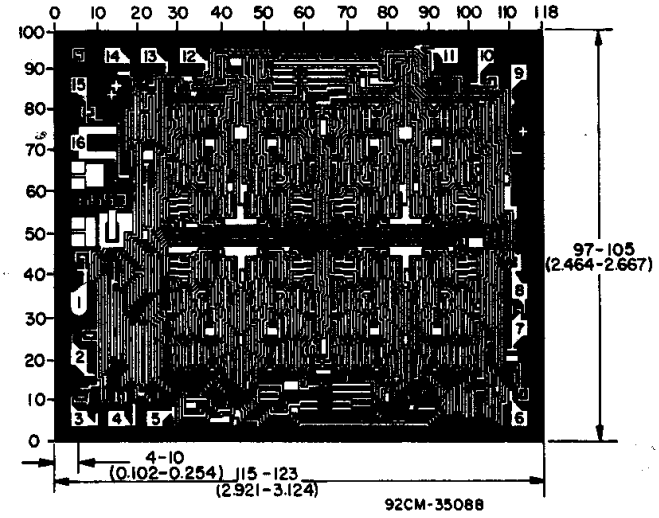

Dimensions and pad layout for CD40103B.

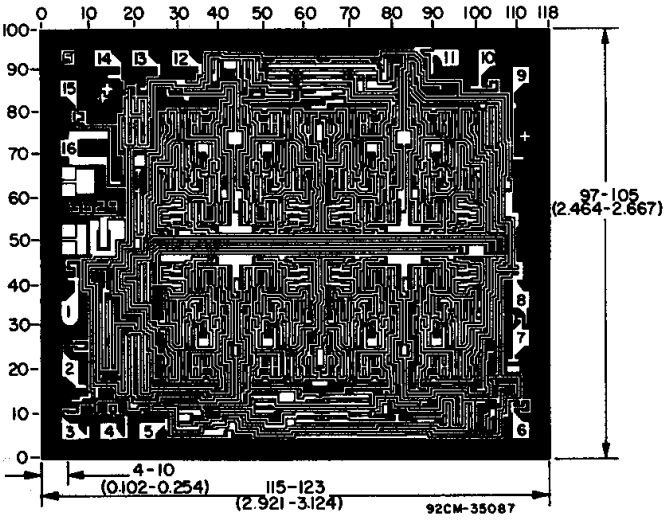

PACKAGING INFORMATION

Orderable part number	Status (1)	Material type (2)	Package | Pins	Package qty | Carrier	RoHS (3)	Lead finish/ Ball material (4)	MSL rating/ Peak reflow (5)	Op temp (°C)	Part marking (6)
CD40102BE	Active	Production	PDIP (N) | 16	25 | TUBE	Yes	NIPDAU	N/A for Pkg Type	-55 to 125	CD40102BE
CD40102BE.A	Active	Production	PDIP (N) | 16	25 | TUBE	Yes	NIPDAU	N/A for Pkg Type	-55 to 125	CD40102BE
CD40102BNSR	Active	Production	SOP (NS) | 16	2000 | LARGE T&R	Yes	NIPDAU	Level-1-260C-UNLIM	-55 to 125	CD40102B
CD40102BNSR.A	Active	Production	SOP (NS) | 16	2000 | LARGE T&R	Yes	NIPDAU	Level-1-260C-UNLIM	-55 to 125	CD40102B
CD40102BPW	Obsolete	Production	TSSOP (PW) | 16	-	-	Call TI	Call TI	-55 to 125	CM0102B
CD40102BPWR	Active	Production	TSSOP (PW) | 16	2000 | LARGE T&R	Yes	NIPDAU	Level-1-260C-UNLIM	-55 to 125	CM0102B
CD40102BPWR.A	Active	Production	TSSOP (PW) | 16	2000 | LARGE T&R	Yes	NIPDAU	Level-1-260C-UNLIM	-55 to 125	CM0102B
CD40103BE	Active	Production	PDIP (N) | 16	25 | TUBE	Yes	NIPDAU	N/A for Pkg Type	-55 to 125	CD40103BE
CD40103BE.A	Active	Production	PDIP (N) | 16	25 | TUBE	Yes	NIPDAU	N/A for Pkg Type	-55 to 125	CD40103BE
CD40103BEE4	Active	Production	PDIP (N) | 16	25 | TUBE	Yes	NIPDAU	N/A for Pkg Type	-55 to 125	CD40103BE
CD40103BF	Active	Production	CDIP (J) | 16	25 | TUBE	No	SNPB	N/A for Pkg Type	-55 to 125	CD40103BF
CD40103BF.A	Active	Production	CDIP (J) | 16	25 | TUBE	No	SNPB	N/A for Pkg Type	-55 to 125	CD40103BF
CD40103BF3A	Active	Production	CDIP (J) | 16	25 | TUBE	No	SNPB	N/A for Pkg Type	-55 to 125	CD40103BF3A
CD40103BF3A.A	Active	Production	CDIP (J) | 16	25 | TUBE	No	SNPB	N/A for Pkg Type	-55 to 125	CD40103BF3A
CD40103BNSR	Active	Production	SOP (NS) | 16	2000 | LARGE T&R	Yes	NIPDAU	Level-1-260C-UNLIM	-55 to 125	CD40103B
CD40103BNSR.A	Active	Production	SOP (NS) | 16	2000 | LARGE T&R	Yes	NIPDAU	Level-1-260C-UNLIM	-55 to 125	CD40103B
CD40103BPW	Active	Production	TSSOP (PW) | 16	90 | TUBE	Yes	NIPDAU	Level-1-260C-UNLIM	-55 to 125	CM0103B
CD40103BPW.A	Active	Production	TSSOP (PW) | 16	90 | TUBE	Yes	NIPDAU	Level-1-260C-UNLIM	-55 to 125	CM0103B

(1) **Status:** For more details on status, see our product life cycle.

(2) **Material type:** When designated, preproduction parts are prototypes/experimental devices, and are not yet approved or released for full production. Testing and final process, including without limitation quality assurance, reliability performance testing, and/or process qualification, may not yet be complete, and this item is subject to further changes or possible discontinuation. If available for ordering, purchases will be subject to an additional waiver at checkout, and are intended for early internal evaluation purposes only. These items are sold without warranties of any kind.

(3) **RoHS values:** Yes, No, RoHS Exempt. See the TI RoHS Statement for additional information and value definition.

(4) **Lead finish/Ball material:** Parts may have multiple material finish options. Finish options are separated by a vertical ruled line. Lead finish/Ball material values may wrap to two lines if the finish value exceeds the maximum column width.

(5) **MSL rating/Peak reflow:** The moisture sensitivity level ratings and peak solder (reflow) temperatures. In the event that a part has multiple moisture sensitivity ratings, only the lowest level per JEDEC standards is shown. Refer to the shipping label for the actual reflow temperature that will be used to mount the part to the printed circuit board.

(6) **Part marking:** There may be an additional marking, which relates to the logo, the lot trace code information, or the environmental category of the part.

Multiple part markings will be inside parentheses. Only one part marking contained in parentheses and separated by a "~" will appear on a part. If a line is indented then it is a continuation of the previous line and the two combined represent the entire part marking for that device.

Important Information and Disclaimer: The information provided on this page represents TI's knowledge and belief as of the date that it is provided. TI bases its knowledge and belief on information provided by third parties, and makes no representation or warranty as to the accuracy of such information. Efforts are underway to better integrate information from third parties. TI has taken and continues to take reasonable steps to provide representative and accurate information but may not have conducted destructive testing or chemical analysis on incoming materials and chemicals. TI and TI suppliers consider certain information to be proprietary, and thus CAS numbers and other limited information may not be available for release.

In no event shall TI's liability arising out of such information exceed the total purchase price of the TI part(s) at issue in this document sold by TI to Customer on an annual basis.

OTHER QUALIFIED VERSIONS OF CD40103B, CD40103B-MIL :

- Catalog : CD40103B
- Military : CD40103B-MIL

NOTE: Qualified Version Definitions:

- Catalog - TI's standard catalog product
- Military - QML certified for Military and Defense Applications

TAPE AND REEL INFORMATION

REEL DIMENSIONS

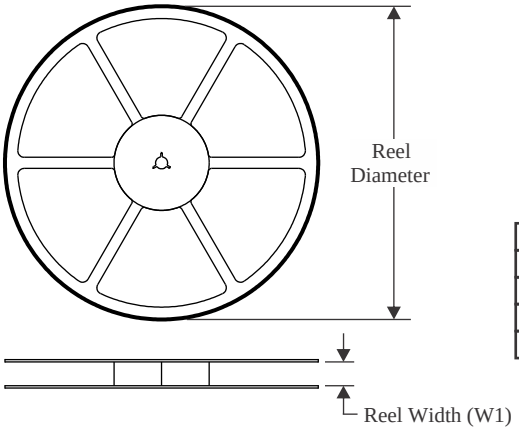

TAPE DIMENSIONS

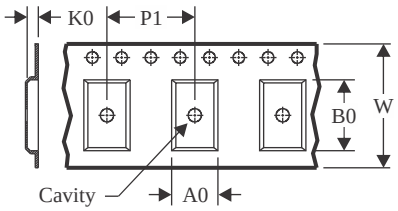

A0	Dimension designed to accommodate the component width
B0	Dimension designed to accommodate the component length
K0	Dimension designed to accommodate the component thickness
W	Overall width of the carrier tape
P1	Pitch between successive cavity centers

QUADRANT ASSIGNMENTS FOR PIN 1 ORIENTATION IN TAPE

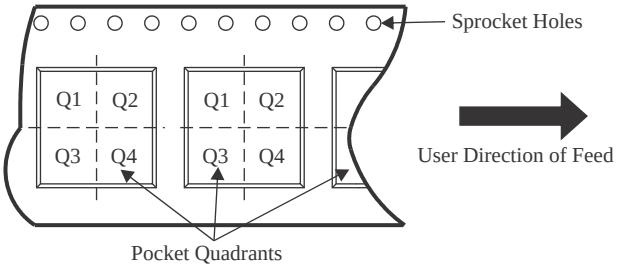

*All dimensions are nominal

Device	Package Type	Package Drawing	Pins	SPQ	Reel Diameter (mm)	Reel Width W1 (mm)	A0 (mm)	B0 (mm)	K0 (mm)	P1 (mm)	W (mm)	Pin1 Quadrant
CD40102BNSR	SOP	NS	16	2000	330.0	16.4	8.2	10.5	2.5	12.0	16.0	Q1
CD40102BPWR	TSSOP	PW	16	2000	330.0	12.4	6.9	5.6	1.6	8.0	12.0	Q1
CD40103BNSR	SOP	NS	16	2000	330.0	16.4	8.2	10.5	2.5	12.0	16.0	Q1

TAPE AND REEL BOX DIMENSIONS

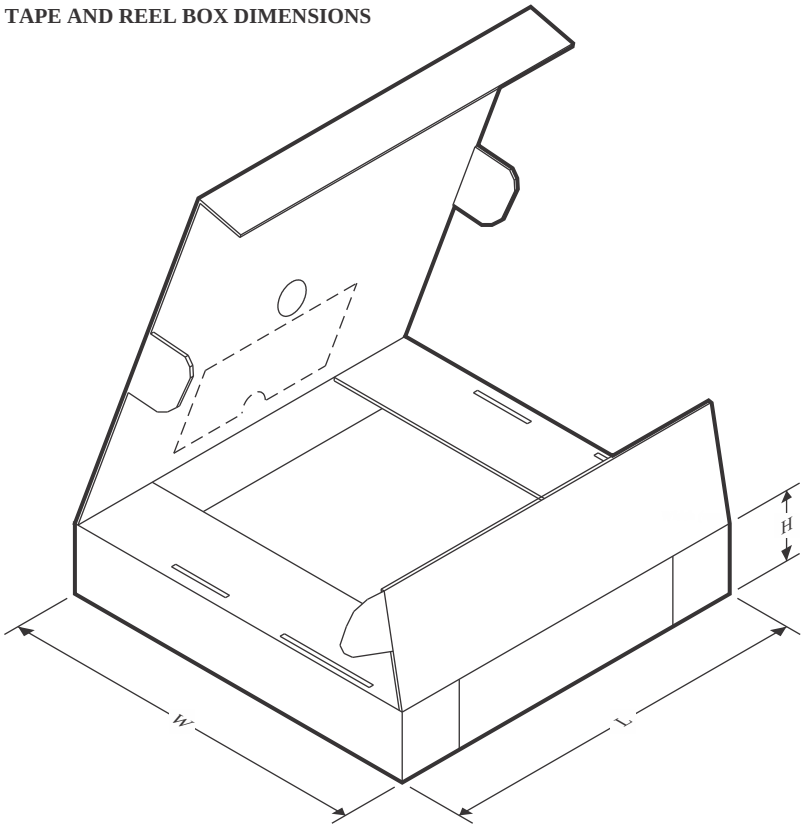

*All dimensions are nominal

Device	Package Type	Package Drawing	Pins	SPQ	Length (mm)	Width (mm)	Height (mm)
CD40102BNSR	SOP	NS	16	2000	356.0	356.0	35.0
CD40102BPWR	TSSOP	PW	16	2000	356.0	356.0	35.0
CD40103BNSR	SOP	NS	16	2000	356.0	356.0	35.0

TUBE

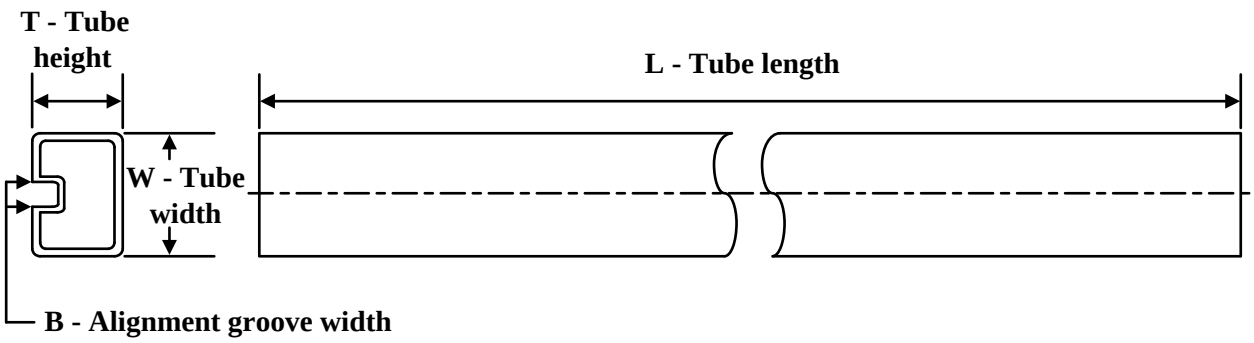

*All dimensions are nominal

Device	Package Name	Package Type	Pins	SPQ	L (mm)	W (mm)	T (µm)	B (mm)
CD40102BE	N	PDIP	16	25	506	13.97	11230	4.32
CD40102BE	N	PDIP	16	25	506	13.97	11230	4.32
CD40102BE.A	N	PDIP	16	25	506	13.97	11230	4.32
CD40102BE.A	N	PDIP	16	25	506	13.97	11230	4.32
CD40103BE	N	PDIP	16	25	506	13.97	11230	4.32
CD40103BE	N	PDIP	16	25	506	13.97	11230	4.32
CD40103BE.A	N	PDIP	16	25	506	13.97	11230	4.32
CD40103BE.A	N	PDIP	16	25	506	13.97	11230	4.32
CD40103BEE4	N	PDIP	16	25	506	13.97	11230	4.32
CD40103BEE4	N	PDIP	16	25	506	13.97	11230	4.32
CD40103BPW	PW	TSSOP	16	90	530	10.2	3600	3.5
CD40103BPW.A	PW	TSSOP	16	90	530	10.2	3600	3.5

J (R–GDIP–T**) CERAMIC DUAL IN–LINE PACKAGE

14 LEADS SHOWN

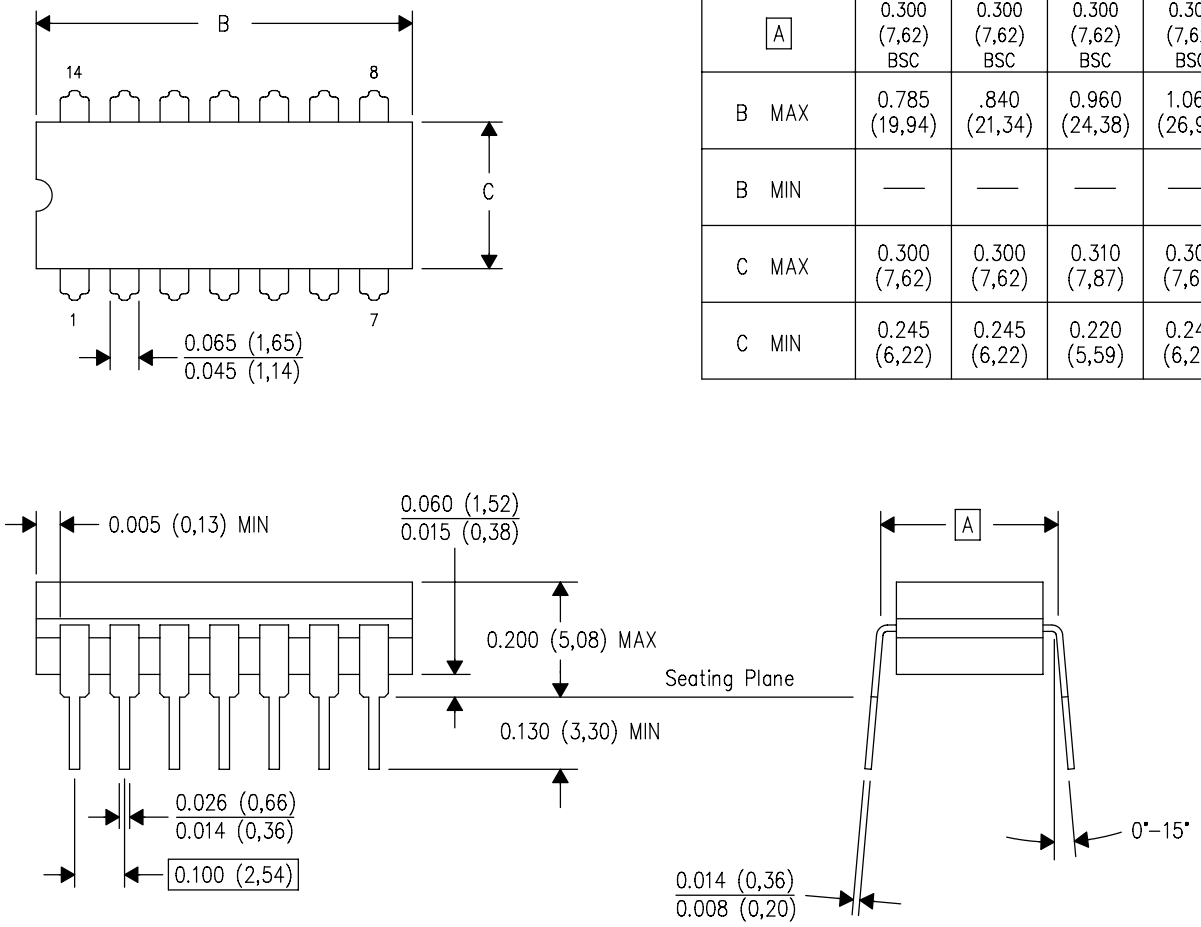

DIM \ PINS **	14	16	18	20
A	0.300 (7,62) BSC	0.300 (7,62) BSC	0.300 (7,62) BSC	0.300 (7,62) BSC
B MAX	0.785 (19,94)	.840 (21,34)	0.960 (24,38)	1.060 (26,92)
B MIN	—	—	—	—
C MAX	0.300 (7,62)	0.300 (7,62)	0.310 (7,87)	0.300 (7,62)
C MIN	0.245 (6,22)	0.245 (6,22)	0.220 (5,59)	0.245 (6,22)

4040083/F 03/03

NOTES:
- A. All linear dimensions are in inches (millimeters).
- B. This drawing is subject to change without notice.
- C. This package is hermetically sealed with a ceramic lid using glass frit.
- D. Index point is provided on cap for terminal identification only on press ceramic glass frit seal only.
- E. Falls within MIL STD 1835 GDIP1–T14, GDIP1–T16, GDIP1–T18 and GDIP1–T20.

N (R–PDIP–T**) PLASTIC DUAL–IN–LINE PACKAGE

16 PINS SHOWN

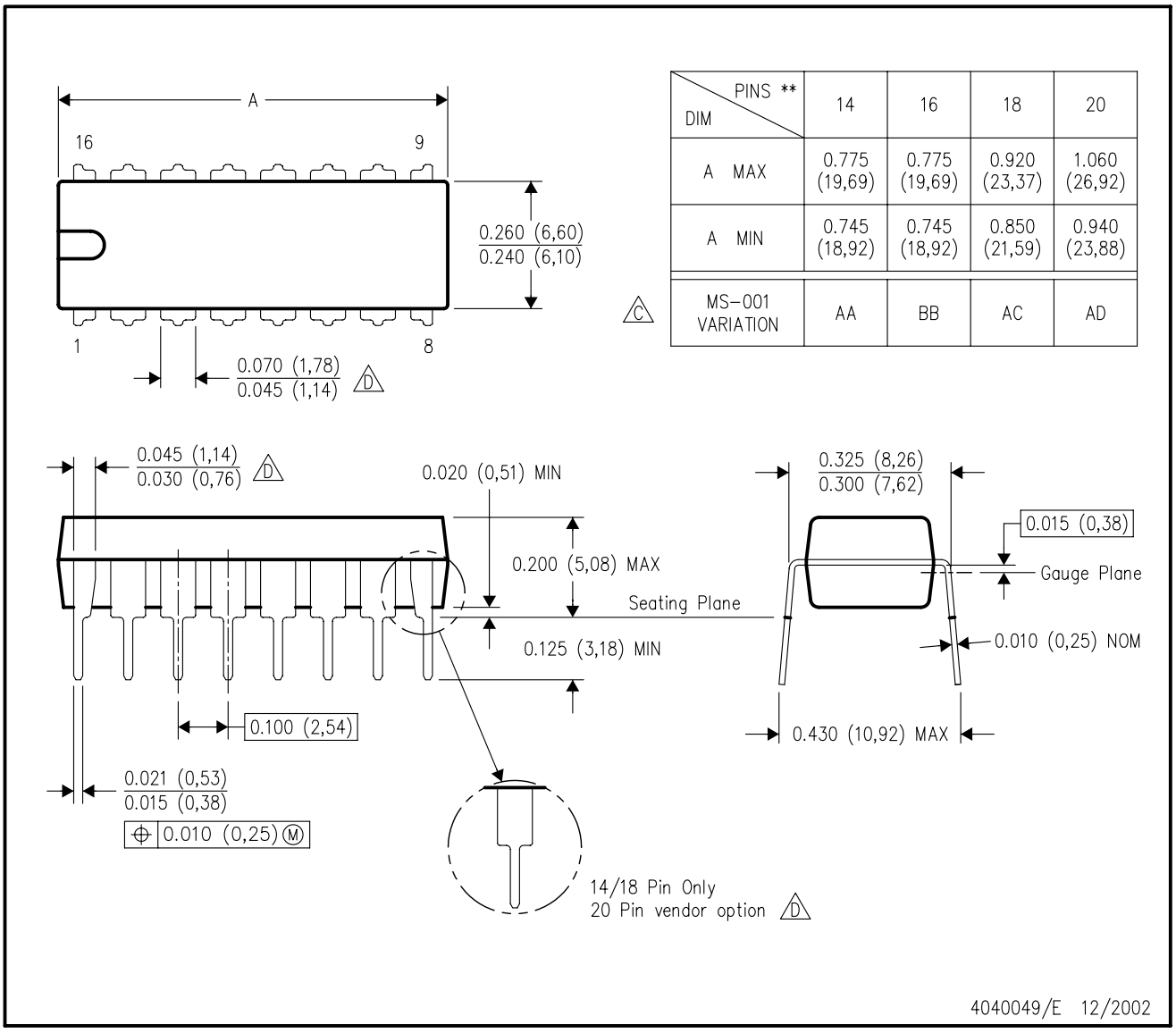

DIM \ PINS **	14	16	18	20
A MAX	0.775 (19,69)	0.775 (19,69)	0.920 (23,37)	1.060 (26,92)
A MIN	0.745 (18,92)	0.745 (18,92)	0.850 (21,59)	0.940 (23,88)
MS–001 VARIATION (C)	AA	BB	AC	AD

NOTES:
A. All linear dimensions are in inches (millimeters).
B. This drawing is subject to change without notice.
C. Falls within JEDEC MS–001, except 18 and 20 pin minimum body length (Dim A).
D. The 20 pin end lead shoulder width is a vendor option, either half or full width.

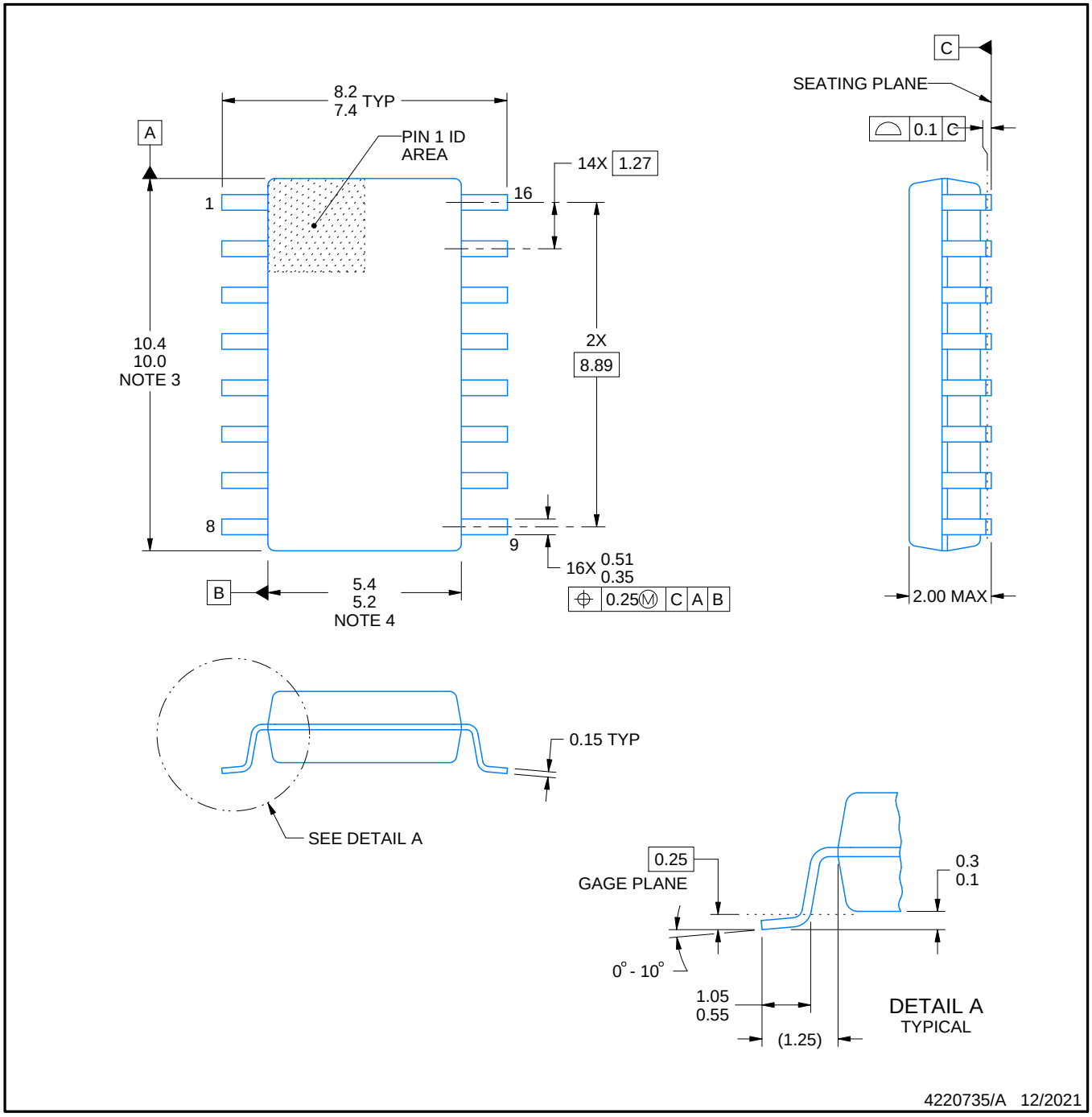

NOTES:

1. All linear dimensions are in millimeters. Dimensions in parenthesis are for reference only. Dimensioning and tolerancing per ASME Y14.5M.
2. This drawing is subject to change without notice.
3. This dimension does not include mold flash, protrusions, or gate burrs. Mold flash, protrusions, or gate burrs shall not exceed 0.15 mm, per side.
4. This dimension does not include interlead flash. Interlead flash shall not exceed 0.25 mm, per side.

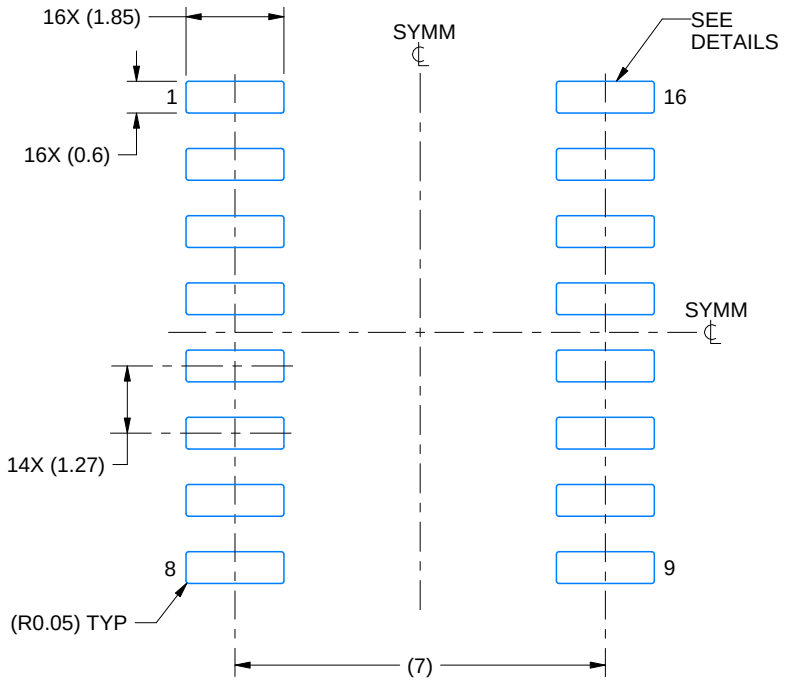

LAND PATTERN EXAMPLE
SCALE:7X

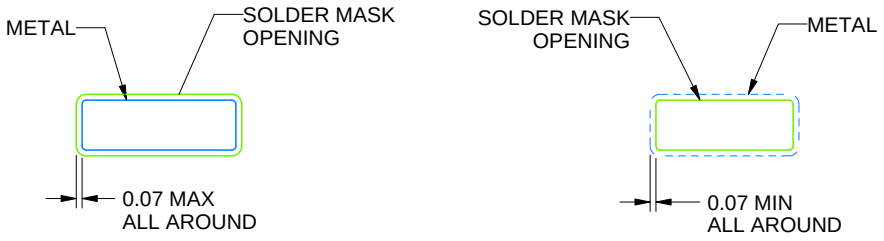

NON SOLDER MASK DEFINED

SOLDER MASK DEFINED

SOLDER MASK DETAILS

4220735/A 12/2021

NOTES: (continued)

5. Publication IPC-7351 may have alternate designs.
6. Solder mask tolerances between and around signal pads can vary based on board fabrication site.

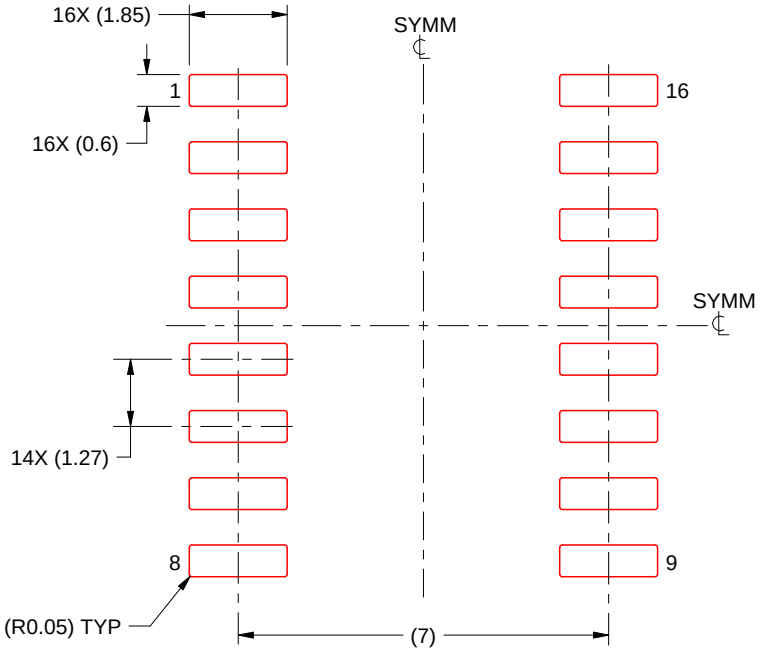

SOLDER PASTE EXAMPLE
BASED ON 0.125 mm THICK STENCIL
SCALE:7X

4220735/A 12/2021

NOTES: (continued)

7. Laser cutting apertures with trapezoidal walls and rounded corners may offer better paste release. IPC-7525 may have alternate design recommendations.
8. Board assembly site may have different recommendations for stencil design.

PW0016A

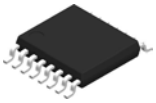

PACKAGE OUTLINE

TSSOP - 1.2 mm max height

SMALL OUTLINE PACKAGE

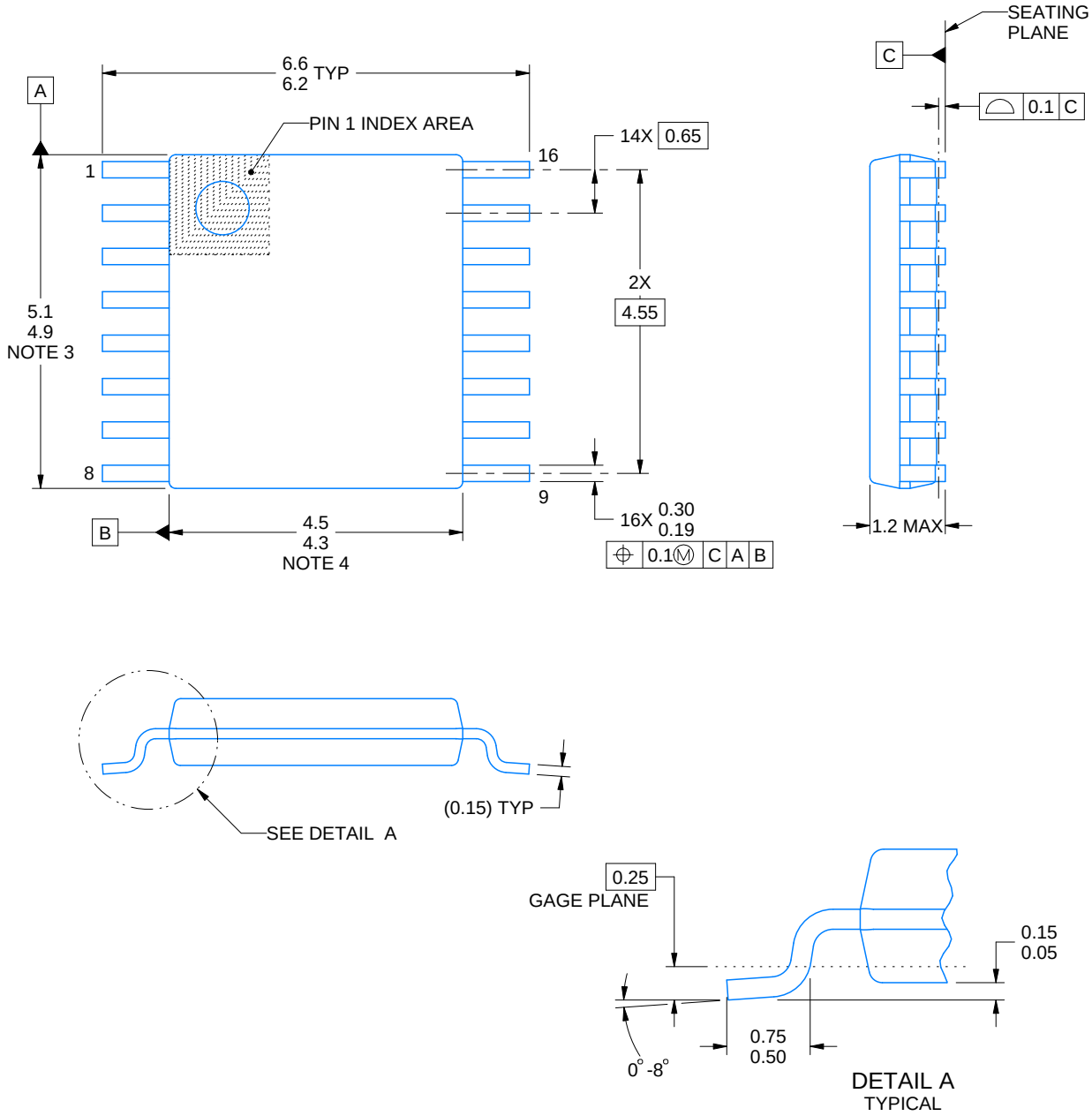

NOTES:

1. All linear dimensions are in millimeters. Any dimensions in parenthesis are for reference only. Dimensioning and tolerancing per ASME Y14.5M.
2. This drawing is subject to change without notice.
3. This dimension does not include mold flash, protrusions, or gate burrs. Mold flash, protrusions, or gate burrs shall not exceed 0.15 mm per side.
4. This dimension does not include interlead flash. Interlead flash shall not exceed 0.25 mm per side.
5. Reference JEDEC registration MO-153.

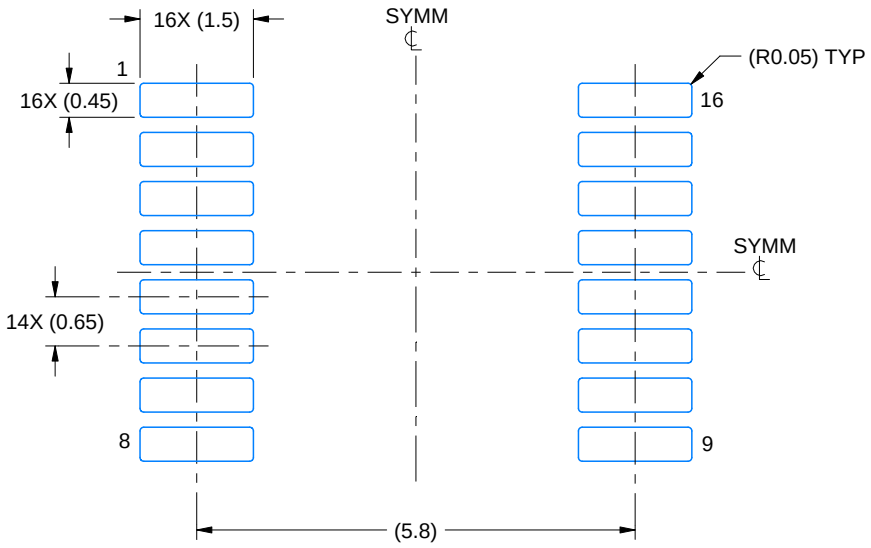

LAND PATTERN EXAMPLE
EXPOSED METAL SHOWN
SCALE: 10X

NON-SOLDER MASK DEFINED (PREFERRED)

SOLDER MASK DEFINED

SOLDER MASK DETAILS

4220204/A 02/2017

NOTES: (continued)

6. Publication IPC-7351 may have alternate designs.
7. Solder mask tolerances between and around signal pads can vary based on board fabrication site.

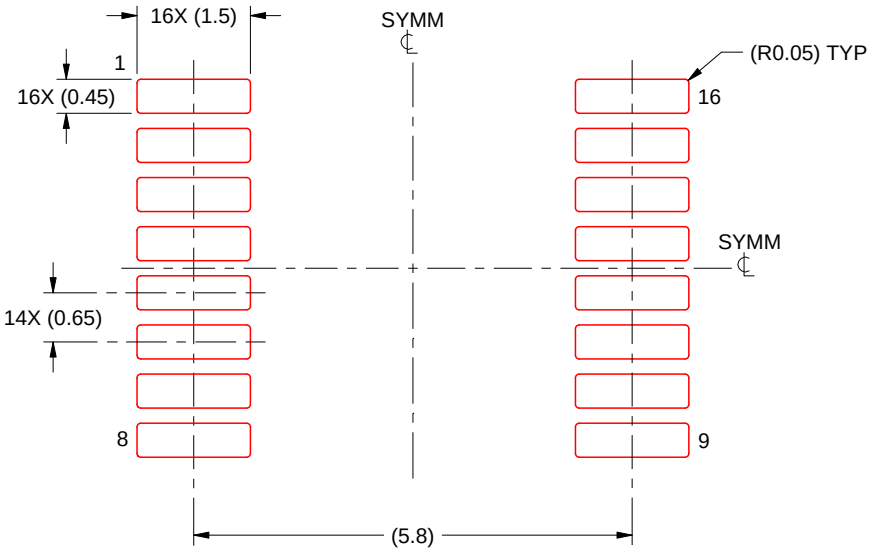

SOLDER PASTE EXAMPLE
BASED ON 0.125 mm THICK STENCIL
SCALE: 10X

4220204/A 02/2017

NOTES: (continued)

8. Laser cutting apertures with trapezoidal walls and rounded corners may offer better paste release. IPC-7525 may have alternate design recommendations.
9. Board assembly site may have different recommendations for stencil design.

MECHANICAL DATA

NS (R-PDSO-G)** **PLASTIC SMALL-OUTLINE PACKAGE**

14-PINS SHOWN

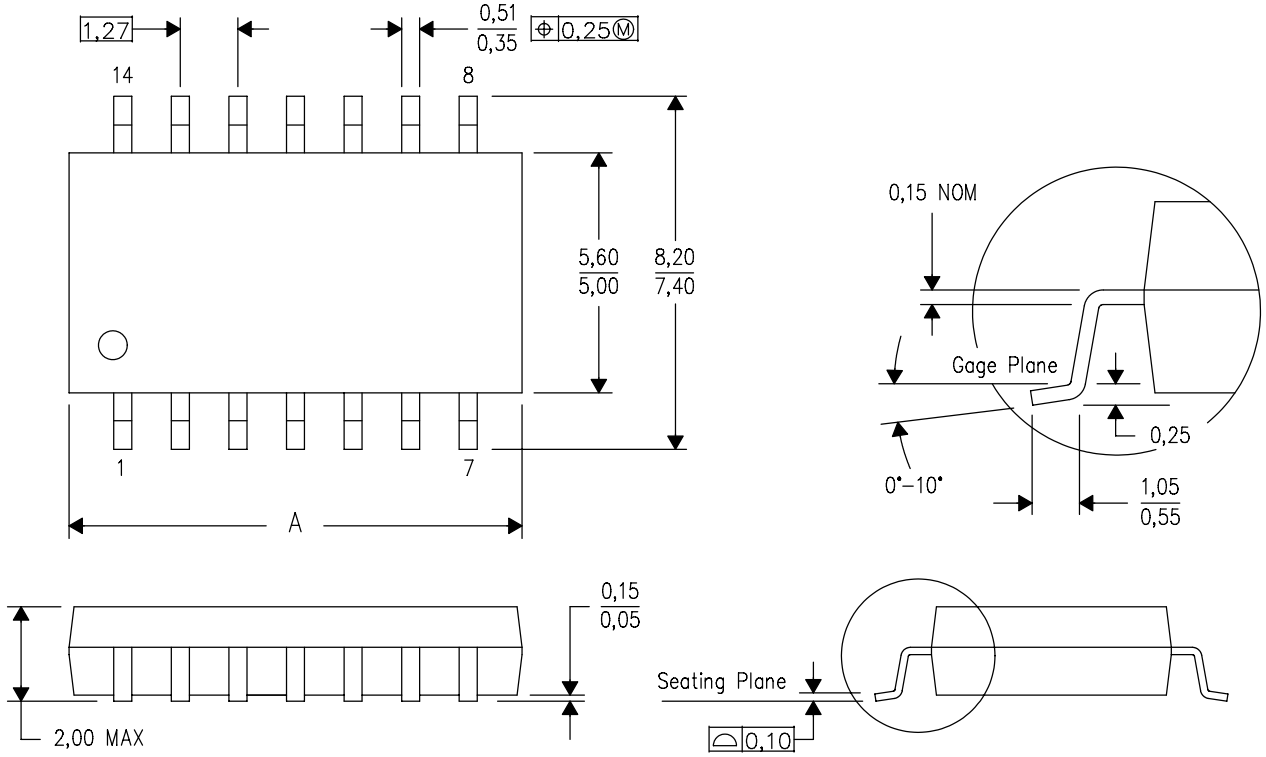

DIM \ PINS **	14	16	20	24
A MAX	10,50	10,50	12,90	15,30
A MIN	9,90	9,90	12,30	14,70

4040062/C 03/03

NOTES:
A. All linear dimensions are in millimeters.
B. This drawing is subject to change without notice.
C. Body dimensions do not include mold flash or protrusion, not to exceed 0,15.

IMPORTANT NOTICE AND DISCLAIMER

TI PROVIDES TECHNICAL AND RELIABILITY DATA (INCLUDING DATA SHEETS), DESIGN RESOURCES (INCLUDING REFERENCE DESIGNS), APPLICATION OR OTHER DESIGN ADVICE, WEB TOOLS, SAFETY INFORMATION, AND OTHER RESOURCES “AS IS” AND WITH ALL FAULTS, AND DISCLAIMS ALL WARRANTIES, EXPRESS AND IMPLIED, INCLUDING WITHOUT LIMITATION ANY IMPLIED WARRANTIES OF MERCHANTABILITY, FITNESS FOR A PARTICULAR PURPOSE OR NON-INFRINGEMENT OF THIRD PARTY INTELLECTUAL PROPERTY RIGHTS.

These resources are intended for skilled developers designing with TI products. You are solely responsible for (1) selecting the appropriate TI products for your application, (2) designing, validating and testing your application, and (3) ensuring your application meets applicable standards, and any other safety, security, regulatory or other requirements.

These resources are subject to change without notice. TI grants you permission to use these resources only for development of an application that uses the TI products described in the resource. Other reproduction and display of these resources is prohibited. No license is granted to any other TI intellectual property right or to any third party intellectual property right. TI disclaims responsibility for, and you will fully indemnify TI and its representatives against, any claims, damages, costs, losses, and liabilities arising out of your use of these resources.

TI’s products are provided subject to TI’s Terms of Sale or other applicable terms available either on ti.com or provided in conjunction with such TI products. TI’s provision of these resources does not expand or otherwise alter TI’s applicable warranties or warranty disclaimers for TI products.

TI objects to and rejects any additional or different terms you may have proposed.

Mailing Address: Texas Instruments, Post Office Box 655303, Dallas, Texas 75265
Copyright © 2025, Texas Instruments Incorporated