UCC53x0 Single-Channel Isolated Gate Drivers

1 Features

- Feature options
  - Split outputs (UCC53x0S)
  - UVLO referenced to GND2 (UCC53x0E)
  - Miller clamp option (UCC53x0M)
- 8-pin D (4mm creepage) and DWV (8.5mm creepage) package
- 60ns (typical) propagation delay
- 100kV/µs minimum CMTI
- Isolation barrier life > 40 Years
- 3V to 15V input supply voltage
- Up to 33V driver supply voltage
  - 8V and 12V UVLO options
- Negative 5V handling capability on input pins
- Safety-related certifications:
  - $7000V_{PK}$ isolation DWV (planned) and $4242V_{PK}$ isolation D per DIN V VDE V 0884-11:2017-01 and DIN EN 61010-1
  - $5000V_{RMS}$ DWV and $3000V_{RMS}$ D isolation rating for 1 minute per UL 1577
  - CQC certification per GB4943.1-2011 D and DWV (planned)
- CMOS inputs
- Operating temperature: –40°C to +125°C

2 Applications

- Motor drives
- High voltage DC-to-DC converters
- UPS and PSU
- HEV and EV power modules
- Solar inverters

3 Description

The UCC53x0 is a family of single-channel, isolated gate drivers designed to drive MOSFETs, IGBTs, SiC MOSFETs, and GaN FETs (UCC5350SBD). The UCC53x0S provides a split output that controls the rise and fall times individually. The UCC53x0M connects the gate of the transistor to an internal clamp to prevent false turn-on caused by Miller current. The UCC53x0E has its UVLO2 referenced to GND2 to get a true UVLO reading.

The UCC53x0 is available in a 4mm SOIC-8 (D) or 8.5mm SOIC-8 (DWV) package and can support isolation voltage up to $3kV_{RMS}$ and $5kV_{RMS}$, respectively. With these various options the UCC53x0 family is a good fit for motor drives and industrial power supplies.

Compared to an optocoupler, the UCC53x0 family has lower part-to-part skew, lower propagation delay, higher operating temperature, and higher CMTI.

Device Information

ORDERABLE PART NUMBER(1) (2)	TYPICAL SOURCE AND SINK CURRENT	DESCRIPTION
UCC5310MC	4.3A and 2.2A	Miller clamp
UCC5320SC	4.3A and 4.4A	Split output
UCC5320EC	4.3A and 4.4A	UVLO with respect to IGBT emitter
UCC5350MC	10A and 10A	Miller clamp
UCC5350SB	8.5A and 10A	Split Output with 8V UVLO
UCC5390SC	17A and 17A	Split output
UCC5390EC	17A and 17A	UVLO with respect to IGBT emitter

(1) For all available packages, see Section 14.
(2) For a detailed comparison of devices, see Section 4.

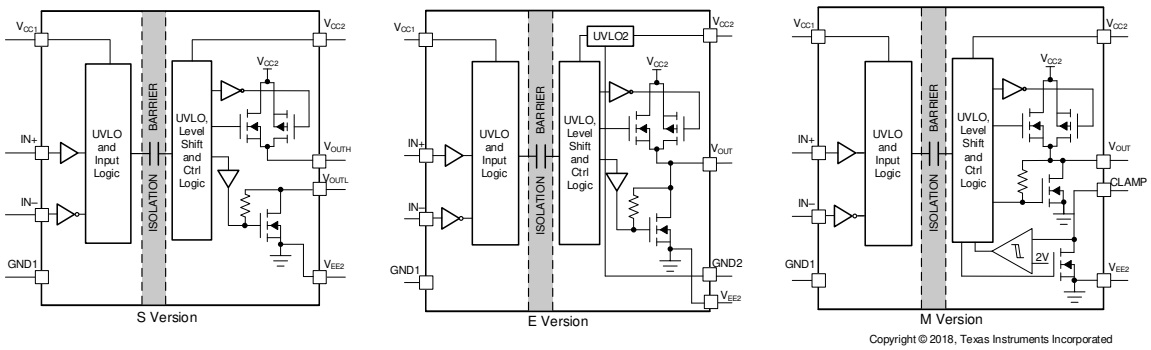

Functional Block Diagram (S, E, and M Versions)

An IMPORTANT NOTICE at the end of this data sheet addresses availability, warranty, changes, use in safety-critical applications, intellectual property matters and other important disclaimers. PRODUCTION DATA.

Table of Contents

1 Features....1
2 Applications....1
3 Description....1
4 Device Comparison Table....3
5 Pin Configuration and Function....4
6 Specifications....6
6.1 Absolute Maximum Ratings....6
6.2 ESD Ratings....6
6.3 Recommended Operating Conditions....6
6.4 Thermal Information....7
6.5 Power Ratings....7
6.6 Insulation Specifications for D Package....8
6.7 Insulation Specifications for DWV Package....9
6.8 Safety-Related Certifications For D Package....10
6.9 Safety-Related Certifications For DWV Package....10
6.10 Safety Limiting Values....10
6.11 Electrical Characteristics....11
6.12 Switching Characteristics....13
6.13 Insulation Characteristics Curves....14
6.14 Typical Characteristics....15
7 Parameter Measurement Information....22
7.1 Propagation Delay, Inverting, and Noninverting Configuration....22
8 Detailed Description....25
8.1 Overview....25
8.2 Functional Block Diagram....25
8.3 Feature Description....27
8.4 Device Functional Modes....31
9 Application and Implementation....33
9.1 Application Information....33
9.2 Typical Application....33
10 Power Supply Recommendations....39
11 Layout....40
11.1 Layout Guidelines....40
11.2 Layout Example....41
11.3 PCB Material....42
12 Device and Documentation Support....44
12.1 Device Support....44
12.2 Documentation Support....44
12.3 Certifications....44
12.4 Receiving Notification of Documentation Updates....44
12.5 Support Resources....44
12.6 Trademarks....44
12.7 Electrostatic Discharge Caution....44
12.8 Glossary....44
13 Revision History....44
14 Mechanical, Packaging, and Orderable Information....46

Copyright © 2024 Texas Instruments Incorporated

4 Device Comparison Table

DEVICE OPTION[(1)]	PACKAGE	TYPICAL SOURCE CURRENT	TYPICAL SINK CURRENT	PIN CONFIGURATION	UVLO	ISOLATION RATING
UCC5310MC	D	4.3 A	2.2 A	Miller clamp	12 V	3-kV_{RMS}
	DWV					5-kV_{RMS}
UCC5320EC	D	4.3 A	4.4 A	UVLO with reference to GND2	12 V	3-kV_{RMS}
UCC5320SC	D	4.3 A	4.4 A	Split output	12 V	3-kV_{RMS}
	DWV					5-kV_{RMS}
UCC5350MC	D	10 A	10 A	Miller clamp	12 V	3-kV_{RMS}
	DWV					5-kV_{RMS}
UCC5350SB	D	8.5 A	10 A	Split Output	8 V	3-kV_{RMS}
UCC5390EC	D	17 A	17 A	UVLO with reference to GND2	12 V	3-kV_{RMS}
	DWV					5-kV_{RMS}
UCC5390SC	D	17 A	17 A	Split output	12 V	3-kV_{RMS}

(1) The S, E, and M suffixes are part of the orderable part number. See Section 14 for the full orderable part number.

Copyright © 2024 Texas Instruments Incorporated

5 Pin Configuration and Function

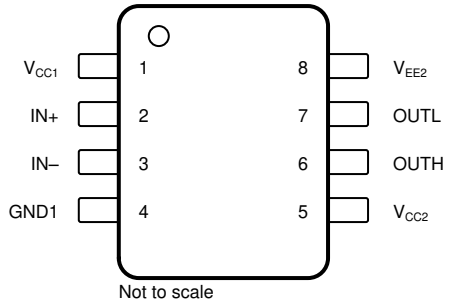

Figure 5-1. UCC5320S, UCC5350SB, and UCC5390S 8-Pin SOIC Top View

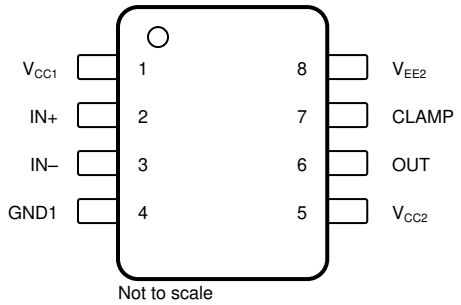

Figure 5-2. UCC5310M and UCC5350M 8-Pin SOIC Top View

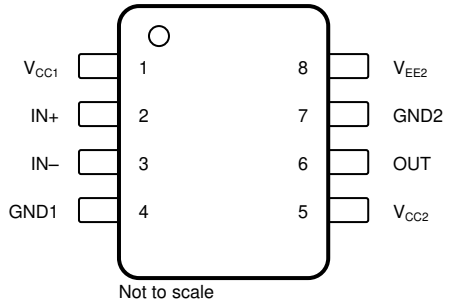

Figure 5-3. UCC5320E and UCC5390E 8-Pin SOIC Top View

Table 5-1. Pin Functions

PIN				TYPE[1]	DESCRIPTION
NAME	NO.				
	UCC53x0S	UCC53x0M	UCC53x0E		
CLAMP	—	7	—	I	Active Miller-clamp input found on the UCC53x0M used to prevent false turnon of the power switches.
GND1	4	4	4	G	Input ground. All signals on the input side are referenced to this ground.
GND2	—	—	7	G	Gate-drive common pin. Connect this pin to the IGBT emitter. UVLO referenced to GND2 in the UCC53x0E.
IN+	2	2	2	I	Noninverting gate-drive voltage-control input. The IN+ pin has a CMOS input threshold. This pin is pulled low internally if left open. Use Table 8-4 to understand the input and output logic of these devices.
IN–	3	3	3	I	Inverting gate-drive voltage control input. The IN– pin has a CMOS input threshold. This pin is pulled high internally if left open. Use Table 8-4 to understand the input and output logic of these devices.
OUT	—	6	6	O	Gate-drive output for UCC53x0E and UCC53x0M versions.
OUTH	6	—	—	O	Gate-drive pull-up output found on the UCC53x0S.

Copyright © 2024 Texas Instruments Incorporated

Table 5-1. Pin Functions (continued)

PIN				TYPE[1]	DESCRIPTION
NAME	NO.				
	UCC53x0S	UCC53x0M	UCC53x0E		
OUTL	7	—	—	O	Gate-drive pull-down output found on the UCC53x0S.
V_{CC1}	1	1	1	P	Input supply voltage. Connect a locally decoupled capacitor to GND. Use a low-ESR or ESL capacitor located as close to the device as possible.
V_{CC2}	5	5	5	P	Positive output supply rail. Connect a locally decoupled capacitor to V_{EE2}. Use a low-ESR or ESL capacitor located as close to the device as possible.
V_{EE2}	8	8	8	P	Negative output supply rail for E version, and GND for S and M versions. Connect a locally decoupled capacitor to GND2 for E version. Use a low-ESR or ESL capacitor located as close to the device as possible.

(1) P = Power, G = Ground, I = Input, O = Output

6 Specifications

6.1 Absolute Maximum Ratings

Over operating free air temperature range (unless otherwise noted)[1]

		MIN	MAX	UNIT
Input bias pin supply voltage	V_{CC1} – GND1	GND1 – 0.3	18	V
Driver bias supply	V_{CC2} – V_{EE2}	–0.3	35	V
V_{EE2} bipolar supply voltage for E version	V_{EE2} – GND2	–17.5	0.3	V
Output signal voltage	V_{OUTH} – V_{EE2}, V_{OUTL} – V_{EE2}, V_{OUT} – V_{EE2}, V_{CLAMP} – V_{EE2}	V_{EE2} – 0.3	V_{CC2} + 0.3	V
Input signal voltage	V_{IN+} – GND1, V_{IN-} – GND1	GND1 – 5	V_{CC1} + 0.3	V
Junction temperature, T_J [2]		–40	150	°C
Storage temperature, T_{stg}		–65	150	°C

(1) Operation outside the Absolute Maximum Ratings may cause permanent device damage. Absolute Maximum Ratings do not imply functional operation of the device at these or any other conditions beyond those listed under Recommended Operating Conditions. If outside the Recommended Operating Conditions but within the Absolute Maximum Ratings, the device may not be fully functional, and this may affect device reliability, functionality, performance, and shorten the device lifetime.
(2) To maintain the recommended operating conditions for T_J, see the Thermal Information table.

6.2 ESD Ratings

			VALUE	UNIT
$V_{(ESD)}$	Electrostatic discharge	Human body model (HBM), per ANSI/ESDA/JEDEC JS–001[1]	±4000	V
		Charged device model (CDM), per JEDEC specification JESD22-C101[2]	±1500	

(1) JEDEC document JEP155 states that 500-V HBM allows safe manufacturing with a standard ESD control process.
(2) JEDEC document JEP157 states that 250-V CDM allows safe manufacturing with a standard ESD control process.

6.3 Recommended Operating Conditions

Over operating free-air temperature range (unless otherwise noted)

		MIN	NOM	MAX	UNIT
V_{CC1}	Supply voltage, input side	3		15	V
V_{CC2}	Positive supply voltage output side (V_{CC2} – V_{EE2}), UCC53x0	13.2		33	V
V_{CC2}	Positive supply voltage output side (V_{CC2} – V_{EE2}), UCC5350SBD	9.5		33	V
V_{EE2}	Bipolar supply voltage for E version (V_{EE2} – GND2), UCC53x0	–16		0	V
V_{SUP2}	Total supply voltage output side (V_{CC2} – V_{EE2}), UCC53x0	13.2		33	V
T_A	Ambient temperature	–40		125	°C

Copyright © 2024 Texas Instruments Incorporated

6.4 Thermal Information

THERMAL METRIC[1]		UCC53x0		UNIT
		D (SOIC)	DWV (SOIC)	
		8 PINS	8 PINS	
$R_{\theta JA}$	Junction–to-ambient thermal resistance	109.5	119.8	°C/W
$R_{\theta JC(top)}$	Junction–to-case (top) thermal resistance	43.1	64.1	°C/W
$R_{\theta JB}$	Junction–to-board thermal resistance	51.2	65.4	°C/W
Ψ_{JT}	Junction–to-top characterization parameter	18.3	37.6	°C/W
Ψ_{JB}	Junction–to-board characterization parameter	50.7	63.7	°C/W

(1) For more information about traditional and new thermal metrics, see the *Semiconductor and IC Package Thermal Metrics Application Report*.

6.5 Power Ratings

PARAMETER		TEST CONDITIONS	MIN	TYP	MAX	UNIT
D Package						
P_D	Maximum power dissipation on input and output	V_{CC1} = 15 V, V_{CC2} = 15 V, f = 2.1-MHz, 50% duty cycle, square wave, 2.2-nF load			1.14	W
P_{D1}	Maximum input power dissipation				0.05	W
P_{D2}	Maximum output power dissipation				1.09	W
DWV Package						
P_D	Maximum power dissipation on input and output	V_{CC1} = 15 V, V_{CC2} = 15 V, f = 1.9-MHz, 50% duty cycle, square wave, 2.2-nF load			1.04	W
P_{D1}	Maximum input power dissipation				0.05	W
P_{D2}	Maximum output power dissipation				0.99	W

Copyright © 2024 Texas Instruments Incorporated

6.6 Insulation Specifications for D Package

PARAMETER		TEST CONDITIONS	VALUE	UNIT
			D	
CLR	External Clearance[1]	Shortest pin–to-pin distance through air	≥ 4	mm
CPG	External Creepage[1]	Shortest pin–to-pin distance across the package surface	≥ 4	mm
DTI	Distance through the insulation	Minimum internal gap (internal clearance)	> 21	µm
CTI	Comparative tracking index	DIN EN 60112 (VDE 0303–11); IEC 60112	> 400	V
	Material Group	According to IEC 60664–1	II	
Overvoltage category per IEC 60664-1		Rated mains voltage ≤ 150_{VRMS}	I-IV	
		Rated mains voltage ≤ 300_{VRMS}	I-III	
DIN V VDE 0884–11: 2017–01[2]				
V_{IORM}	Maximum repetitive peak isolation voltage	AC voltage (bipolar)	990[6]	V_{PK}
V_{IOWM}	Maximum isolation working voltage	AC voltage (sine wave); time dependent dielectric breakdown (TDDB) test	700[6]	V_{RMS}
		DC Voltage	990[6]	V_{DC}
V_{IOTM}	Maximum transient isolation voltage	$V_{TEST} = V_{IOTM}$, t = 60 s (qualification); $V_{TEST} = 1.2 \times V_{IOTM}$, t = 1 s (100% production)	4242	V_{PK}
V_{IOSM}	Maximum surge isolation voltage[3]	Test method per IEC 62368-1, 1.2/50-µs waveform, $V_{TEST} = 1.3 \times V_{IOSM}$ (qualification)	4242	V_{PK}
q_{pd}	Apparent charge[4]	Method a: After I/O safety test subgroup 2/3, $V_{ini} = V_{IOTM}$, t_{ini} = 60 s $V_{pd(m)} = 1.2 \times V_{IORM}$, t_m = 10 s	≤ 5	pC
		Method a: After environmental tests subgroup 1, $V_{ini} = V_{IOTM}$, t_{ini} = 60 s; $V_{pd(m)} = 1.2 \times V_{IORM}$, t_m = 10 s	≤ 5	
		Method b1: At routine test (100% production) and preconditioning (type test), $V_{ini} = 1.2 \times V_{IOTM}$, t_{ini} = 1 s; $V_{pd(m)} = 1.5 \times V_{IORM}$, t_m = 1 s	≤ 5	
C_{IO}	Barrier capacitance, input to output[5]	$V_{IO} = 0.4 \times \sin(2\pi ft)$, f = 1 MHz	1.2	pF
R_{IO}	Isolation resistance, input to output[5]	V_{IO} = 500 V, T_A = 25°C	> 10^{12}	Ω
		V_{IO} = 500 V, 100°C ≤ T_A ≤ 125°C	> 10^{11}	
		V_{IO} = 500 V at T_S = 150°C	> 10^{9}	
	Pollution degree		2	
	Climatic category		40/125/21	
UL 1577				
V_{ISO}	Withstand isolation voltage	$V_{TEST} = V_{ISO}$, t = 60 s (qualification); $V_{TEST} = 1.2 \times V_{ISO}$, t = 1 s (100% production)	3000	V_{RMS}

(1) Creepage and clearance requirements should be applied according to the specific equipment isolation standards of an application. Care should be taken to maintain the creepage and clearance distance of a board design to ensure that the mounting pads of the isolator on the printed-circuit board do not reduce this distance. Creepage and clearance on a printed-circuit board become equal in certain cases. Techniques such as inserting grooves, ribs, or both on a printed circuit board are used to help increase these specifications.
(2) This coupler is suitable for basic electrical insulation only within the maximum operating ratings. Compliance with the safety ratings shall be ensured by means of suitable protective circuits.
(3) Testing is carried out in air or oil to determine the intrinsic surge immunity of the isolation barrier.
(4) Apparent charge is electrical discharge caused by a partial discharge (pd).
(5) All pins on each side of the barrier tied together creating a two-pin device.
(6) System isolation working voltages need to be verified according to application parameters.

Copyright © 2024 Texas Instruments Incorporated

6.7 Insulation Specifications for DWV Package

PARAMETER		TEST CONDITIONS	VALUE	UNIT
			DWV	
CLR	External Clearance[1]	Shortest pin–to-pin distance through air	≥ 8.5	mm
CPG	External Creepage[1]	Shortest pin–to-pin distance across the package surface	≥ 8.5	mm
DTI	Distance through the insulation	Minimum internal gap (internal clearance)	> 21	µm
CTI	Comparative tracking index	DIN EN 60112 (VDE 0303–11); IEC 60112	> 600	V
	Material Group	According to IEC 60664–1	I	
Overvoltage category per IEC 60664-1		Rated mains voltage ≤ 600_{VRMS}	I-III	
		Rated mains voltage ≤ 1000_{VRMS}	I-II	
DIN V VDE 0884–11: 2017–01[2]				
V_{IORM}	Maximum repetitive peak isolation voltage	AC voltage (bipolar)	2121	V_{PK}
V_{IOWM}	Maximum isolation working voltage	AC voltage (sine wave); time dependent dielectric breakdown (TDDB) test	1500	V_{RMS}
		DC Voltage	2121	V_{DC}
V_{IOTM}	Maximum transient isolation voltage	$V_{TEST} = V_{IOTM}$, t = 60 s (qualification) ; $V_{TEST} = 1.2 \times V_{IOTM}$, t = 1 s (100% production)	7000	V_{PK}
V_{IOSM}	Maximum surge isolation voltage[3]	Test method per IEC 62368-1, 1.2/50-µs waveform, $V_{TEST} = 1.6 \times V_{IOSM}$ (qualification)	8000	V_{PK}
q_{pd}	Apparent charge [4]	Method a: After I/O safety test subgroup 2/3, $V_{ini} = V_{IOTM}$, t_{ini} = 60 s $V_{pd(m)} = 1.2 \times V_{IORM}$, t_m = 10 s	≤ 5	pC
		Method a: After environmental tests subgroup 1, $V_{ini} = V_{IOTM}$, t_{ini} = 60 s; $V_{pd(m)} = 1.6 \times V_{IORM}$, t_m = 10 s	≤ 5	
		Method b1: At routine test (100% production) and preconditioning (type test), $V_{ini} = 1.2 \times V_{IOTM}$, t_{ini} = 1 s; $V_{pd(m)} = 1.875 \times V_{IORM}$, t_m = 1 s	≤ 5	
C_{IO}	Barrier capacitance, input to output[5]	$V_{IO} = 0.4 \times \sin(2\pi ft)$, f = 1 MHz	1.2	pF
R_{IO}	Isolation resistance, input to output[5]	V_{IO} = 500 V, T_A = 25°C	> 10^{12}	Ω
		V_{IO} = 500 V, 100°C ≤ T_A ≤ 125°C	> 10^{11}	
		V_{IO} = 500 V at T_S = 150°C	> 10^{9}	
	Pollution degree		2	
	Climatic category		40/125/21	
UL 1577				
V_{ISO}	Withstand isolation voltage	$V_{TEST} = V_{ISO}$, t = 60 s (qualification); $V_{TEST} = 1.2 \times V_{ISO}$, t = 1 s (100% production)	5000	V_{RMS}

(1) Creepage and clearance requirements should be applied according to the specific equipment isolation standards of an application. Care should be taken to maintain the creepage and clearance distance of a board design to ensure that the mounting pads of the isolator on the printed-circuit board do not reduce this distance. Creepage and clearance on a printed-circuit board become equal in certain cases. Techniques such as inserting grooves, ribs, or both on a printed circuit board are used to help increase these specifications.
(2) This coupler is suitable for safe electrical insulation only within the safety ratings. Compliance with the safety ratings shall be ensured by means of suitable protective circuits.
(3) Testing is carried out in air or oil to determine the intrinsic surge immunity of the isolation barrier.
(4) Apparent charge is electrical discharge caused by a partial discharge (pd).
(5) All pins on each side of the barrier tied together creating a two-pin device.

Copyright © 2024 Texas Instruments Incorporated

6.8 Safety-Related Certifications For D Package

VDE	UL	CQC
Certified according to DIN V VDE V 0884–11:2017–01 and DIN EN 61010-1 (VDE 0411-1):2011-07	Recognized under UL 1577 Component Recognition Program	Certified according to GB 4943.1–2011
Basic Insulation Maximum Transient Isolation Overvoltage, 4242 V_{PK}; Maximum Repetitive Peak Voltage, 990 V_{PK}; Maximum Surge Isolation Voltage, 4242 V_{PK}	Single protection, 3000 V_{RMS}	Basic Insulation, Altitude ≤ 5000m, Tropical Climate, 700 V_{RMS} Maximum Working Voltage
Certificate Number: 40047657	File Number: E181974	Certification number: CQC18001199354

6.9 Safety-Related Certifications For DWV Package

VDE	UL	CQC
Plan to certify according to DIN V VDE V 0884–11:2017–01 and DIN EN 61010-1	Recognized under UL 1577 Component Recognition Program	Plan to certify according to GB 4943.1–2011
Reinforced Insulation Maximum Transient Isolation Overvoltage, 7000 V_{PK}; Maximum Repetitive Peak Isolation Voltage, 2121 V_{PK}; Maximum Surge Isolation Voltage, 8000 V_{PK}	Single protection, 5000 V_{RMS}	Reinforced Insulation, Altitude ≤ 5000 m, Tropical Climate
Certification number: 40047657	File Number: E181974	Certification planned

6.10 Safety Limiting Values

Safety limiting intends to minimize potential damage to the isolation barrier upon failure of input or output circuitry.

PARAMETER		TEST CONDITIONS		MIN	TYP	MAX	UNIT
D PACKAGE							
I_S	Safety output supply current	$R_{\theta JA}$ = 109.5°C/W, V_{CC2} = 15 V, T_J = 150°C, T_A = 25°C, see Figure 6-1	Output side			73	mA
		$R_{\theta JA}$ = 109.5°C/W, V_{CC2} = 30 V, T_J = 150°C, T_A = 25°C, see Figure 6-1	Output side			36	
P_S	Safety output supply power	$R_{\theta JA}$ = 109.5°C/W, T_J = 150°C, T_A = 25°C, see Figure 6-3	Input side			0.05	W
			Output side			1.09	
			Total			1.14	
T_S	Maximum safety temperature(1)					150	°C
DWV PACKAGE							
I_S	Safety input, output, or supply current	$R_{\theta JA}$ = 119.8°C/W, V_I = 15 V, T_J = 150°C, T_A = 25°C, see Figure 6-2	Output side			66	mA
		$R_{\theta JA}$ = 119.8°C/W, V_I = 30 V, T_J = 150°C, T_A = 25°C, see Figure 6-2	Output side			33	
P_S	Safety input, output, or total power	$R_{\theta JA}$ = 119.8°C/W, T_J = 150°C, T_A = 25°C, see Figure 6-4	Input side			0.05	W
			Output side			0.99	
			Total			1.04	
T_S	Maximum safety temperature(1)					150	°C

(1) The maximum safety temperature, T_S, has the same value as the maximum junction temperature, T_J, specified for the device. The I_S and P_S parameters represent the safety current and safety power respectively. The maximum limits of I_S and P_S should not be exceeded. These limits vary with the ambient temperature, T_A.

The junction-to-air thermal resistance, $R_{\theta JA}$, in the Thermal Information table is that of a device installed on a high-K test board for leaded surface-mount packages. Use these equations to calculate the value for each parameter:

$T_J = T_A + R_{\theta JA} \times P$, where P is the power dissipated in the device.

$T_{J(max)} = T_S = T_A + R_{\theta JA} \times P_S$, where $T_{J(max)}$ is the maximum allowed junction temperature.

$P_S = I_S \times V_I$, where V_I is the maximum input voltage.

Copyright © 2024 Texas Instruments Incorporated

6.11 Electrical Characteristics

V_{CC1} = 3.3 V or 5 V, 0.1-µF capacitor from V_{CC1} to GND1, V_{CC2}= 15 V, 1-µF capacitor from V_{CC2} to V_{EE2}, C_L = 100-pF, T_A = –40°C to +125°C, (unless otherwise noted)

PARAMETER		TEST CONDITIONS	MIN	TYP	MAX	UNIT
SUPPLY CURRENTS						
I_{VCC1}	Input supply quiescent current			1.67	2.4	mA
I_{VCC2}	Output supply quiescent current			1.1	1.8	mA
SUPPLY VOLTAGE UNDERVOLTAGE THRESHOLDS						
$V_{IT+(UVLO1)}$	VCC1 Positive-going UVLO threshold voltage			2.6	2.8	V
$V_{IT-(UVLO1)}$	VCC1 Negative-going UVLO threshold voltage		2.4	2.5		V
$V_{hys(UVLO1)}$	VCC1 UVLO threshold hysteresis			0.1		V
UCC5310MC, UCC5320SC,UCC5320EC,UCC5390SC,UCC5390EC, and UCC5350MC UVLO THRESHOLDS (12-V UVLO Version)						
$V_{IT+(UVLO2)}$	VCC2 Positive-going UVLO threshold voltage			12	13	V
$V_{IT-(UVLO2)}$	VCC2 Negative-going UVLO threshold voltage		10.3	11		V
$V_{hys(UVLO2)}$	VCC2 UVLO threshold voltage hysteresis			1		V
UCC5350SB UVLO THRESHOLD (8-V UVLO Version)						
$V_{IT+(UVLO2)}$	VCC2 Positive-going UVLO threshold voltage			8.7	9.4	V
$V_{IT-(UVLO2)}$	VCC2 Negative-going UVLO threshold voltage		7.3	8.0		V
$V_{hys(UVLO2)}$	VCC2 UVLO threshold voltage hysteresis			0.7		V
LOGIC I/O						
$V_{IT+(IN)}$	Positive-going input threshold voltage (IN+, IN–)			0.55 × V_{CC1}	0.7 × V_{CC1}	V
$V_{IT-(IN)}$	Negative-going input threshold voltage (IN+, IN–)		0.3 × V_{CC1}	0.45 × V_{CC1}		V
$V_{hys(IN)}$	Input hysteresis voltage (IN+, IN–)			0.1 × V_{CC1}		V
I_{IH}	High-level input leakage at IN+	IN+ = V_{CC1}		40	240	µA
I_{IL}	Low-level input leakage at IN–	IN– = GND1	–240	–40		µA
		IN– = GND1 – 5 V	–310	–80		
GATE DRIVER STAGE						
V_{OH}	High-level output voltage (VCC2 - OUT) and (VCC2 - OUTH)	I_{OUT} = –20 mA	100	240		mV
V_{OL}	Low level output voltage (OUT and OUTL)	UCC5320SC and UCC5320EC, IN+ = low, IN– = high; I_O = 20 mA	9.4	13		mV
		UCC5310MC, IN+ = low, IN– = high; I_O = 20 mA	17	26		
		UCC5390SC and UCC5390EC, IN+ = low, IN– = high; I_O = 20 mA	2	3		
		UCC5350MC and UCC5350SB, IN+ = low, IN– = high; I_O = 20 mA	5	7		

6.11 Electrical Characteristics (continued)

V_{CC1} = 3.3 V or 5 V, 0.1-µF capacitor from V_{CC1} to GND1, V_{CC2}= 15 V, 1-µF capacitor from V_{CC2} to V_{EE2}, C_L = 100-pF, T_A = –40°C to +125°C, (unless otherwise noted)

PARAMETER		TEST CONDITIONS	MIN	TYP	MAX	UNIT
I_{OH}	Peak source current	UCC5320SC and UCC5320EC, IN+ = high, IN– = low	2.4	4.3		A
		UCC5310MC, IN+ = high, IN– = low	2.4	4.3		
		UCC5390SC and UCC5390EC, IN+ = high, IN– = low	10	17		
		UCC5350MC, IN+ = high, IN– = low	5	10		
		UCC5350SB IN+ = high, IN– = low	5	8.5		
I_{OL}	Peak sink current	UCC5320SC and UCC5320EC, IN+ = low, IN– = high	2.2	4.4		A
		UCC5310MC, IN+ = low, IN– = high	1.1	2.2		
		UCC5390SC and UCC5390EC, IN+ = low, IN– = high	10	17		
		UCC5350MC, IN+ = low, IN– = high	5	10		
		UCC5350SB IN+ = low, IN– = high	5	10		
ACTIVE MILLER CLAMP (UCC53xxM only)						
V_{CLAMP}	Low-level clamp voltage	UCC5310MC, I_{CLAMP} = 20 mA		26	50	mV
		UCC5350MC, I_{CLAMP} = 20 mA		7	10	
I_{CLAMP}	Clamp low-level current	UCC5310MC, V_{CLAMP} = V_{EE2} + 15 V	1.1	2.2		A
		UCC5350MC, V_{CLAMP} = V_{EE2} + 15 V	5	10		
$I_{CLAMP(L)}$	Clamp low-level current for low output voltage	UCC5310MC, V_{CLAMP} = V_{EE2} + 2 V	0.7	1.5		A
		UCC5350MC, V_{CLAMP} = V_{EE2} + 2 V	5	10		
$V_{CLAMP-TH}$	Clamp threshold voltage	UCC5310MC and UCC5350MC		2.1	2.3	V
SHORT CIRCUIT CLAMPING						
$V_{CLP-OUT}$	Clamping voltage (V_{OUTH} – V_{CC2} or V_{OUT} –V_{CC2})	IN+ = high, IN– = low, t_{CLAMP} = 10 µs, I_{OUTH} or I_{OUT}= 500 mA		1	1.3	V
$V_{CLP-OUT}$	Clamping voltage (V_{EE2} – V_{OUTL} or V_{EE2} – V_{CLAMP} or V_{EE2} – V_{OUT})	IN+ = low, IN– = high, t_{CLAMP} = 10 µs, I_{CLAMP} or I_{OUTL} = –500 mA		1.5		V
		IN+ = low, IN– = high, I_{CLAMP} or I_{OUTL} = –20 mA		0.9	1	
ACTIVE PULLDOWN						
V_{OUTSD}	Active pulldown voltage on OUTL, CLAMP, OUT	I_{OUTL} or I_{OUT} = 0.1 × $I_{OUTL(typ)}$, V_{CC2} = open		1.8	2.5	V

Copyright © 2024 Texas Instruments Incorporated

6.12 Switching Characteristics

V_{CC1} = 3.3 V or 5 V, 0.1-µF capacitor from V_{CC1} to GND1, V_{CC2}= 15 V, 1-µF capacitor from V_{CC2} to V_{EE2}, T_A = –40°C to +125°C, (unless otherwise noted)

PARAMETER		TEST CONDITIONS	MIN	TYP	MAX	UNIT
t_r	Output-signal rise time	UCC5320SC, UCC5320EC, and UCC5310MC, C_{LOAD} = 1 nF		12	28	ns
		UCC5390SC, UCC5350SB, UCC5390EC, and UCC5350MC, C_{LOAD} = 1 nF		10	26	ns
t_f	Output-signal fall time	UCC5320SC and UCC5320EC, C_{LOAD} = 1 nF		10	25	ns
		UCC5310MC, C_{LOAD} = 1 nF		10	26	ns
		UCC5390SC, UCC5350SB, UCC5390EC, and UCC5350MC, C_{LOAD} = 1 nF		10	22	ns
t_{PLH}	Propagation delay (default versions), high	UCC5320SC and UCC5320EC, C_{LOAD} = 100 pF		60	72	ns
		UCC5310MC, C_{LOAD} = 100 pF		60	75	ns
		UCC5390SC, UCC5350SB, UCC5390EC, and UCC5350MC, C_{LOAD} = 100 pF		65	100	ns
t_{PHL}	Propagation delay (default versions), low	UCC5320CS and UCC5320EC, C_{LOAD} = 100 pF		60	75	ns
		UCC5310MC, C_{LOAD} = 100 pF		60	75	ns
		UCC5390SC, UCC5350SB, UCC5390EC, and UCC5350MC, C_{LOAD} = 100 pF		65	100	ns
t_{UVLO1_rec}	UVLO recovery delay of V_{CC1}	See Figure 8-9		30		µs
t_{UVLO2_rec}	UVLO recovery delay of V_{CC2}	See Figure 8-9		50		µs
t_{PWD}	Pulse width distortion $\lvert t_{PHL} – t_{PLH}\rvert$	UCC5320SC and UCC5320EC, C_{LOAD} = 100 pF		1	20	ns
		UCC5310MC, C_{LOAD} = 100 pF		1	20	ns
		UCC5390SC, UCC5350SB, and UCC5390EC, C_{LOAD} = 100 pF		1	20	ns
		UCC5350MC, C_{LOAD} = 100 pF		1	20	ns
$t_{sk(pp)}$	Part-to-part skew(1)	UCC5320SC and UCC5320EC, C_{LOAD} = 100 pF		1	25	ns
		UCC5310MC, C_{LOAD} = 100 pF		1	25	ns
		UCC5390SC, UCC5350SB, and UCC5390EC, C_{LOAD} = 100 pF		1	25	ns
		UCC5350MC, C_{LOAD} = 100 pF		1	25	ns
CMTI	Common-mode transient immunity	PWM is tied to GND or V_{CC1}, V_{CM} = 1200 V	100	120		kV/µs

(1) $t_{sk(pp)}$ is the magnitude of the difference in propagation delay times between the output of different devices switching in the same direction while operating at identical supply voltages, temperature, input signals and loads guaranteed by characterization.

6.13 Insulation Characteristics Curves

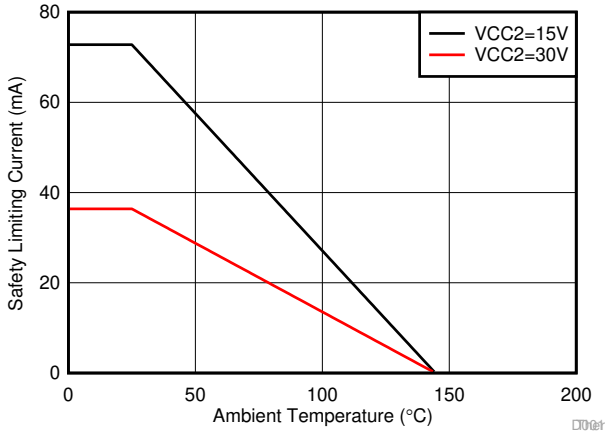

Figure 6-1. Thermal Derating Curve for Limiting Current per VDE for D Package

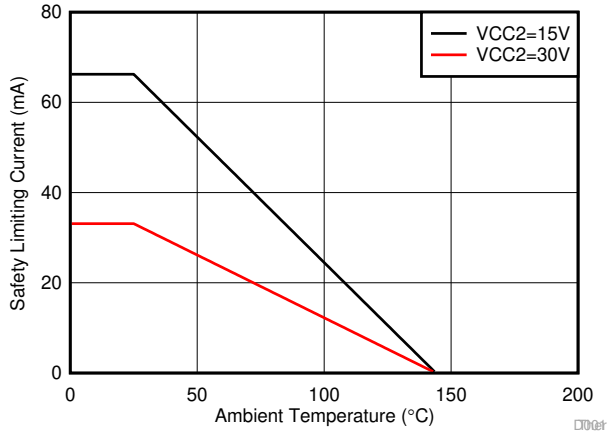

Figure 6-2. Thermal Derating Curve for Limiting Current per VDE for DWV Package

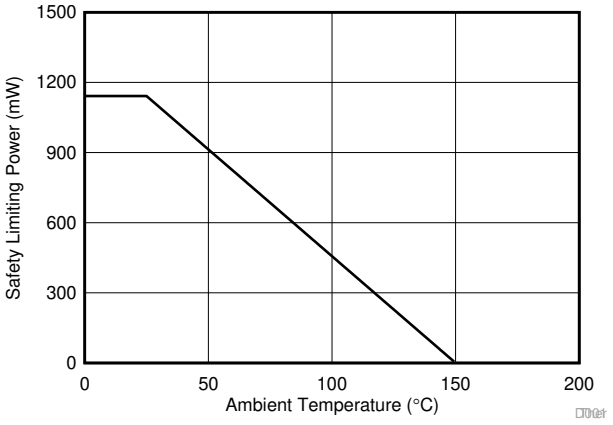

Figure 6-3. Thermal Derating Curve for Limiting Power per VDE for D Package

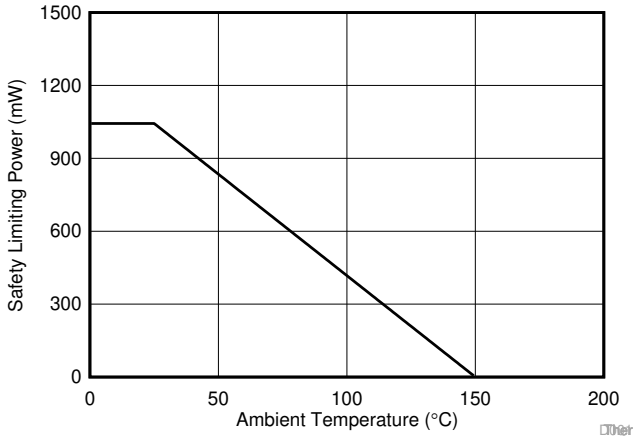

Figure 6-4. Thermal Derating Curve for Limiting Power per VDE for DWV Package

Copyright © 2024 Texas Instruments Incorporated

6.14 Typical Characteristics

V_{CC1} = 3.3 V or 5 V, 0.1-µF capacitor from V_{CC1} to GND1, V_{CC2}= 15 V, 1-µF capacitor from V_{CC2} to V_{EE2}, C_{LOAD} = 1 nF, T_A = –40°C to +125°C, (unless otherwise noted)

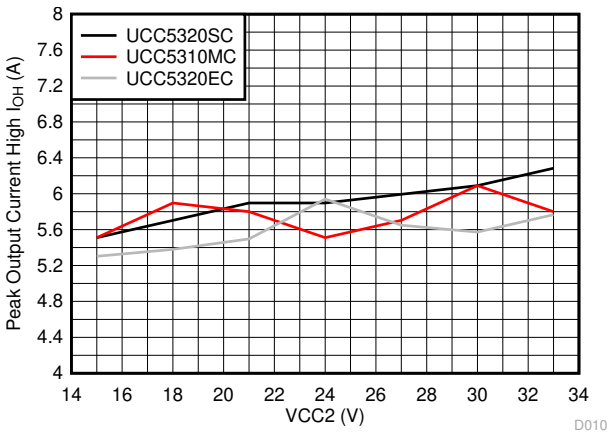

C_{LOAD} = 150 nF

Figure 6-5. Output-High Drive Current vs Output Voltage

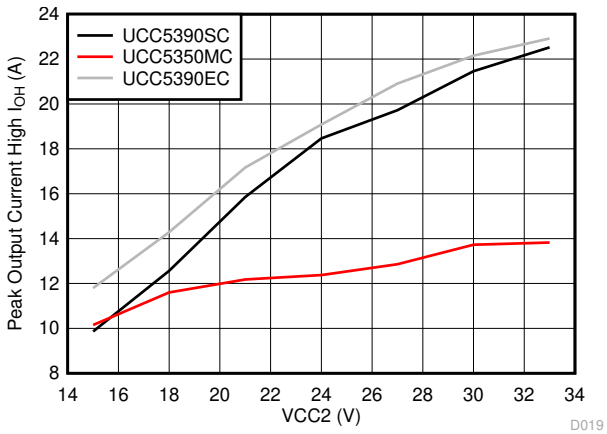

C_{LOAD} = 150 nF

Figure 6-6. Output-High Drive Current vs Output Voltage

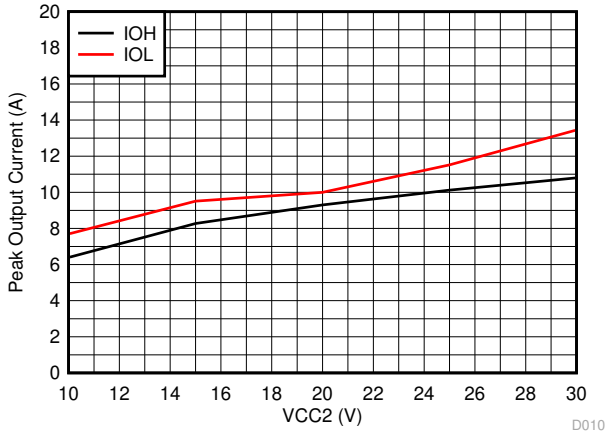

C_{LOAD} = 150 nF

Figure 6-7. UCC5350SBD Output-High Drive Current vs Output Voltage

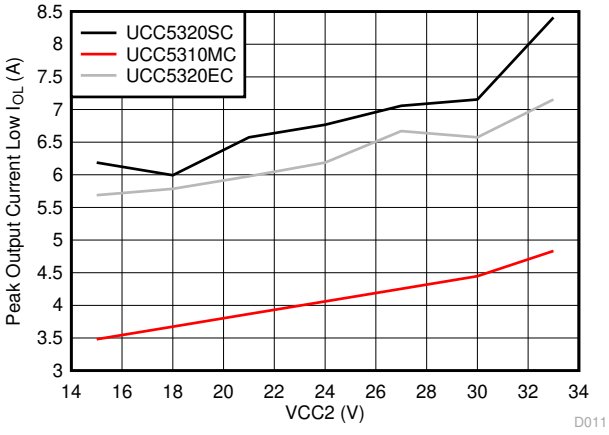

C_{LOAD} = 150 nF

Figure 6-8. Output-Low Drive Current vs Output Voltage

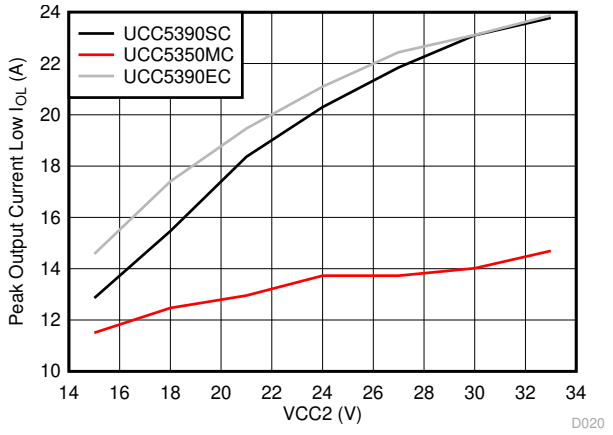

C_{LOAD} = 150 nF

Figure 6-9. Output-Low Drive Current vs Output Voltage

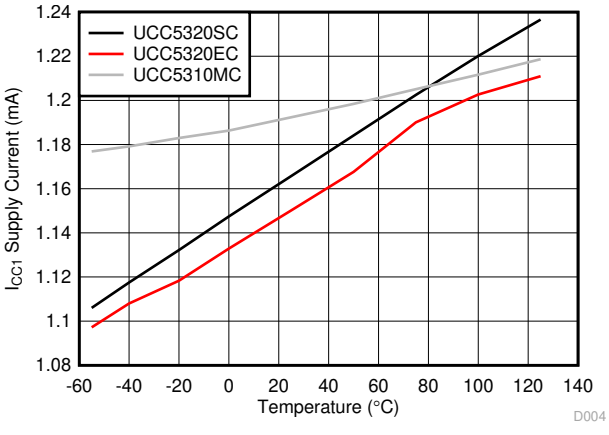

IN+ = L IN– = H

Figure 6-10. I_{CC1} Supply Current vs Temperature

6.14 Typical Characteristics (continued)

V_{CC1} = 3.3 V or 5 V, 0.1-µF capacitor from V_{CC1} to GND1, V_{CC2}= 15 V, 1-µF capacitor from V_{CC2} to V_{EE2}, C_{LOAD} = 1 nF, T_A = –40°C to +125°C, (unless otherwise noted)

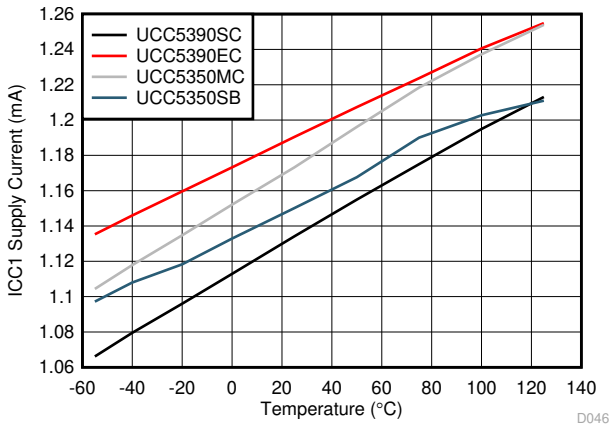

IN+ = L IN– = H

Figure 6-11. I_{CC1} Supply Current vs Temperature

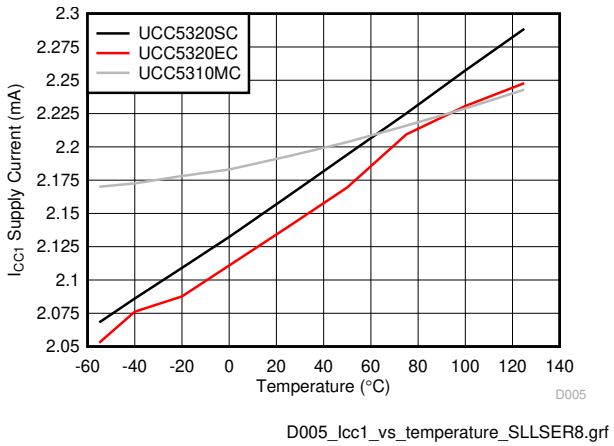

IN+ = H IN– = L

Figure 6-12. I_{CC1} Supply Current vs Temperature

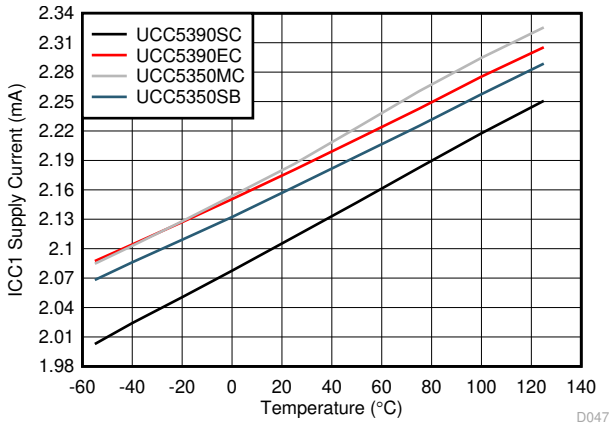

IN+ = H IN– = L

Figure 6-13. I_{CC1} Supply Current vs Temperature

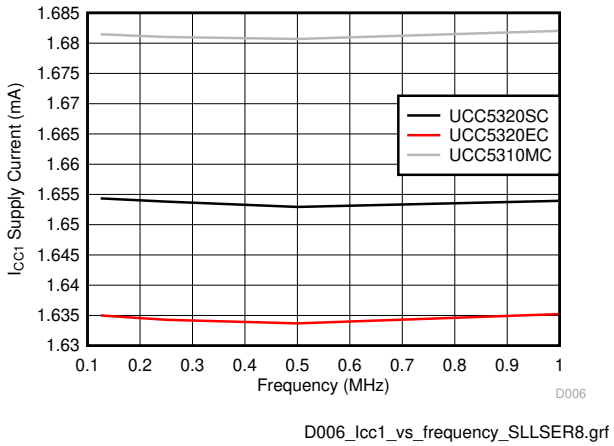

Duty Cycle = 50% T = 25°C

Figure 6-14. I_{CC1} Supply Current vs Input Frequency

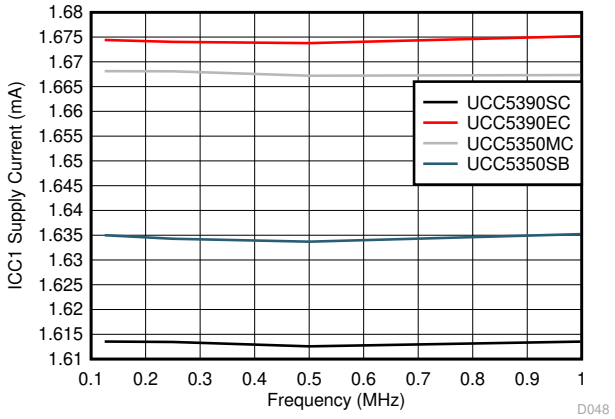

Duty Cycle = 50% T = 25°C

Figure 6-15. I_{CC1} Supply Current vs Input Frequency

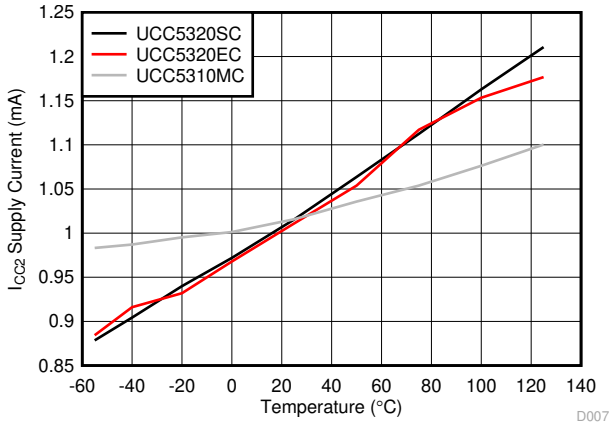

IN+ = L IN– = H

Figure 6-16. I_{CC2} Supply Current vs Temperature

Copyright © 2024 Texas Instruments Incorporated

6.14 Typical Characteristics (continued)

V_{CC1} = 3.3 V or 5 V, 0.1-µF capacitor from V_{CC1} to GND1, V_{CC2}= 15 V, 1-µF capacitor from V_{CC2} to V_{EE2}, C_{LOAD} = 1 nF, T_A = –40°C to +125°C, (unless otherwise noted)

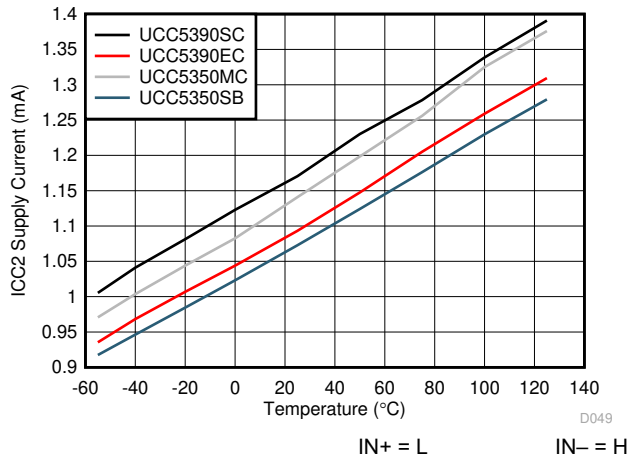

Figure 6-17. I_{CC2} Supply Current vs Temperature

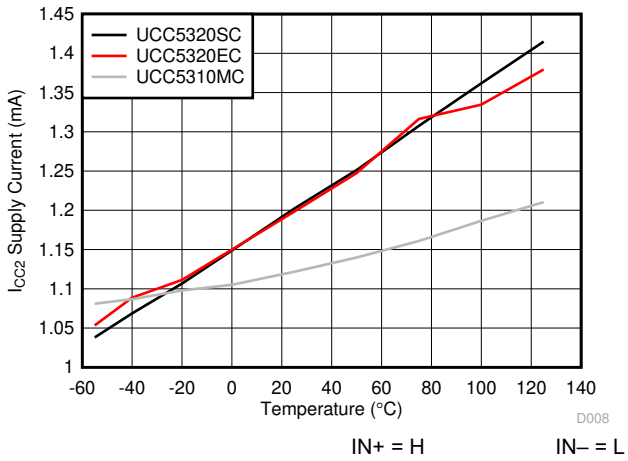

Figure 6-18. I_{CC2} Supply Current vs Temperature

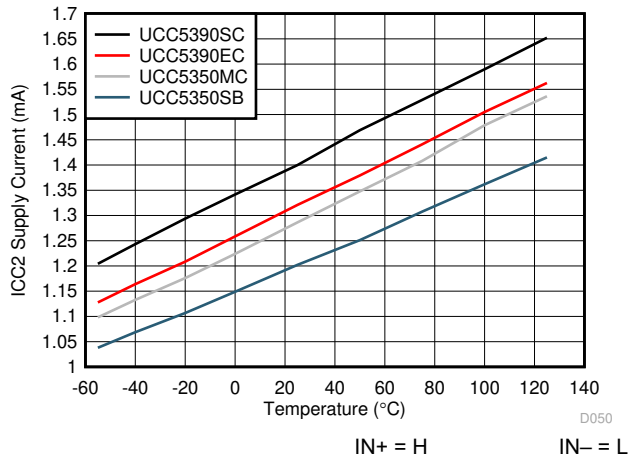

Figure 6-19. I_{CC2} Supply Current vs Temperature

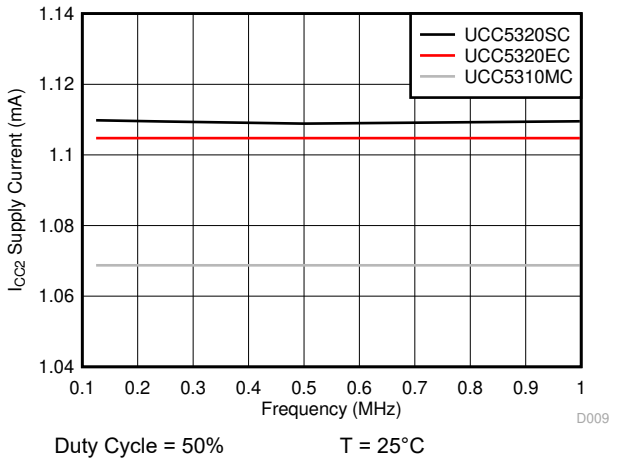

Figure 6-20. I_{CC2} Supply Current vs Input Frequency

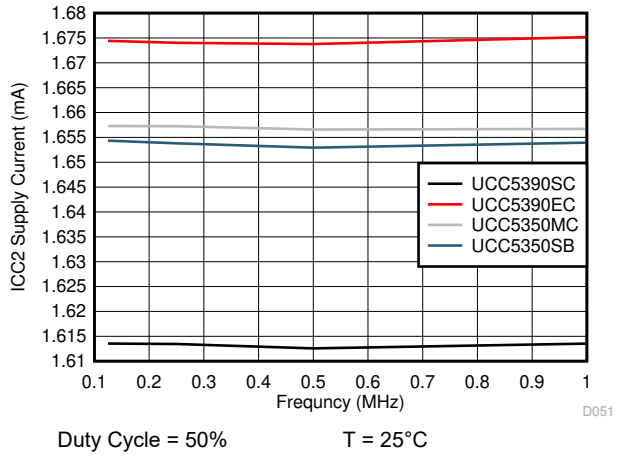

Figure 6-21. I_{CC2} Supply Current vs Input Frequency

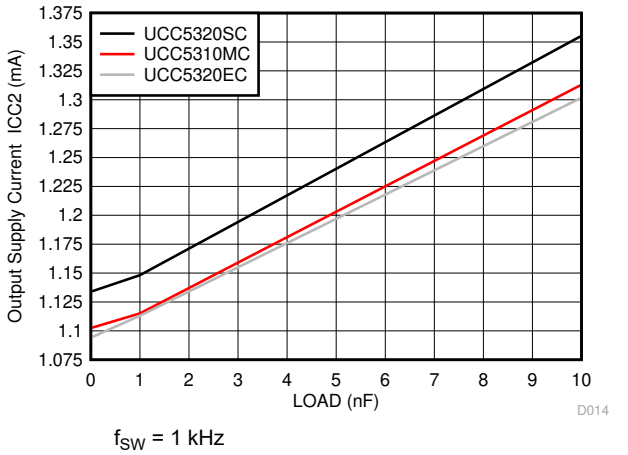

Figure 6-22. I_{CC2} Supply Current vs Load Capacitance

6.14 Typical Characteristics (continued)

V_{CC1} = 3.3 V or 5 V, 0.1-µF capacitor from V_{CC1} to GND1, V_{CC2}= 15 V, 1-µF capacitor from V_{CC2} to V_{EE2}, C_{LOAD} = 1 nF, T_A = –40°C to +125°C, (unless otherwise noted)

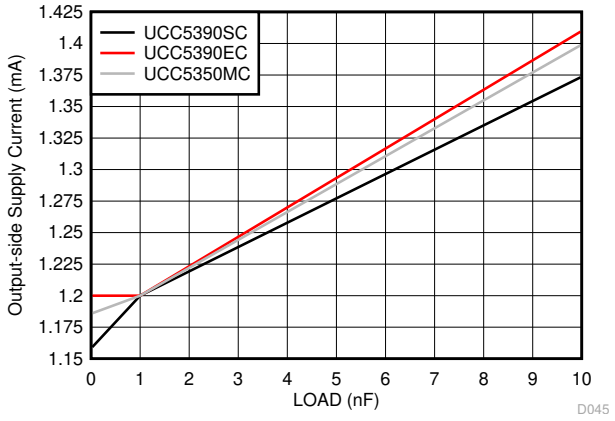

f_{SW} = 1 kHz

Figure 6-23. I_{CC2} Supply Current vs Load Capacitance

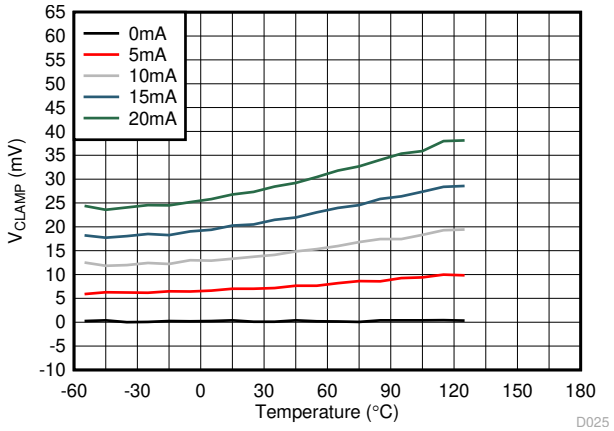

I_{Clamp} = 0mA~20mA

Figure 6-24. UCC5310M V_{Clamp} vs Temperature

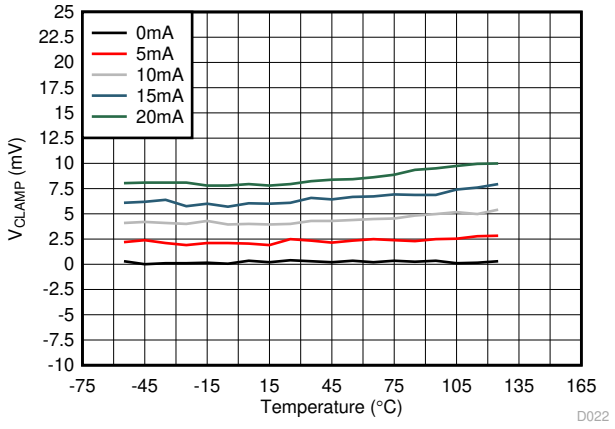

I_{Clamp} = 0mA~20mA

Figure 6-25. UCC5350M V_{Clamp} vs Temperature

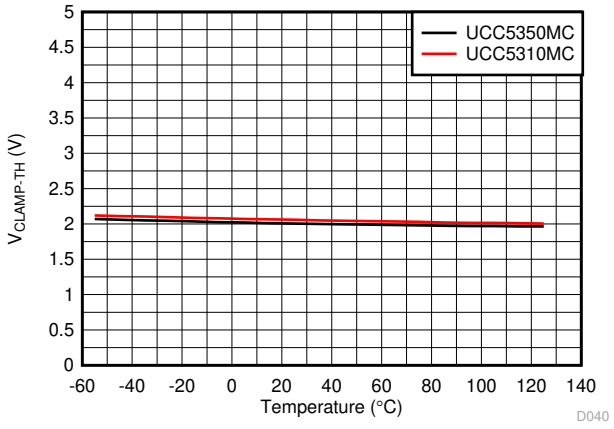

Figure 6-26. $V_{Clamp-TH}$ vs Temperature

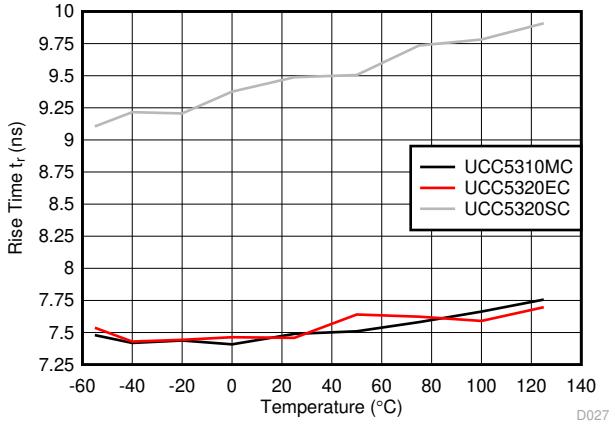

Figure 6-27. Rise Time vs Temperature

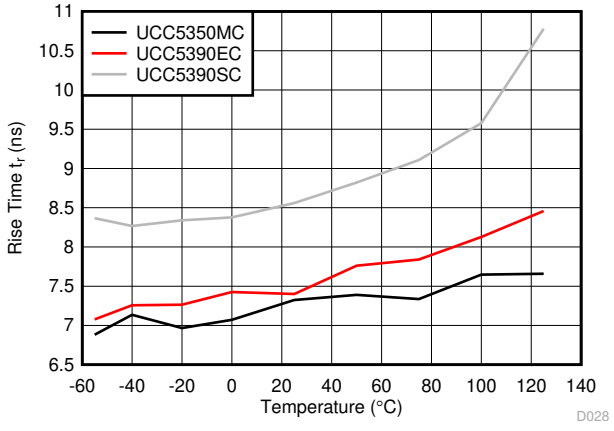

Figure 6-28. Rise Time vs Temperature

Copyright © 2024 Texas Instruments Incorporated

6.14 Typical Characteristics (continued)

V_{CC1} = 3.3 V or 5 V, 0.1-µF capacitor from V_{CC1} to GND1, V_{CC2}= 15 V, 1-µF capacitor from V_{CC2} to V_{EE2}, C_{LOAD} = 1 nF, T_A = –40°C to +125°C, (unless otherwise noted)

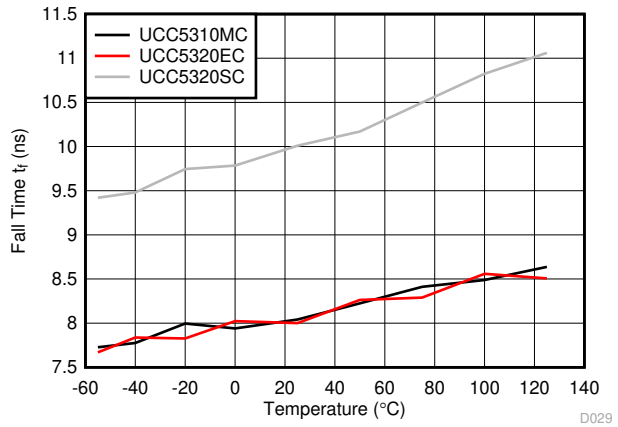

Figure 6-29. Fall Time Vs Temperature

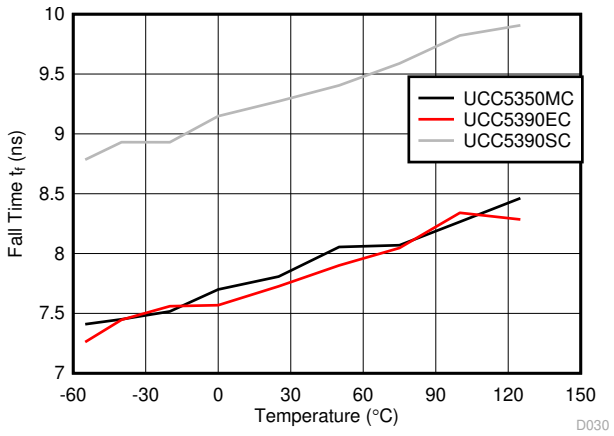

Figure 6-30. Fall Time vs Temperature

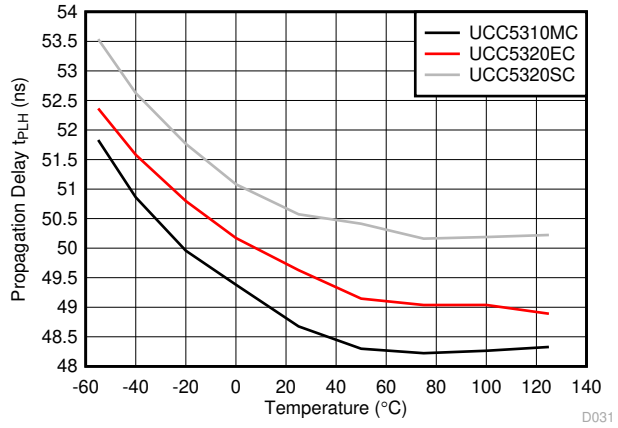

Figure 6-31. Propagation Delay t_{PLH} vs Temperature

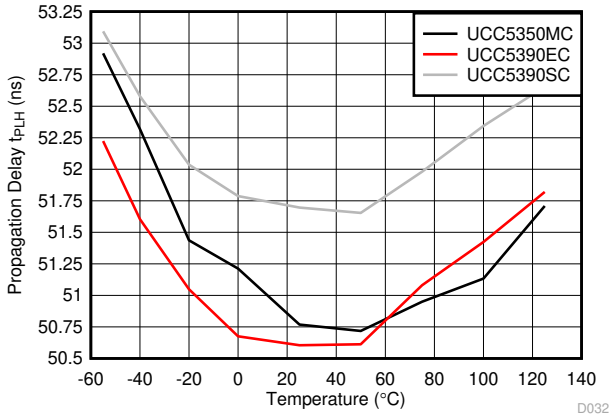

Figure 6-32. Propagation Delay t_{PLH} vs Temperature

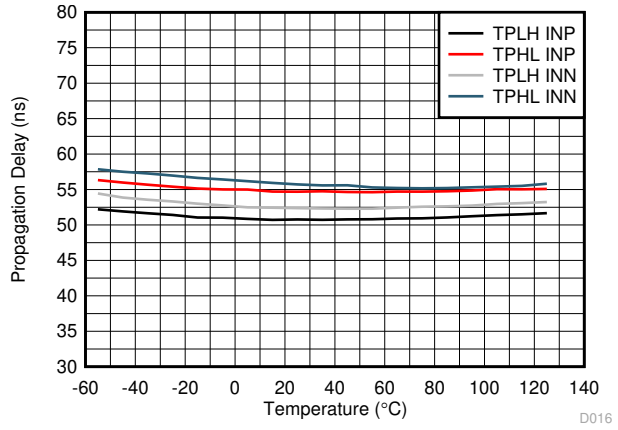

Figure 6-33. UCC5350SBD Propagation Delay vs Temperature

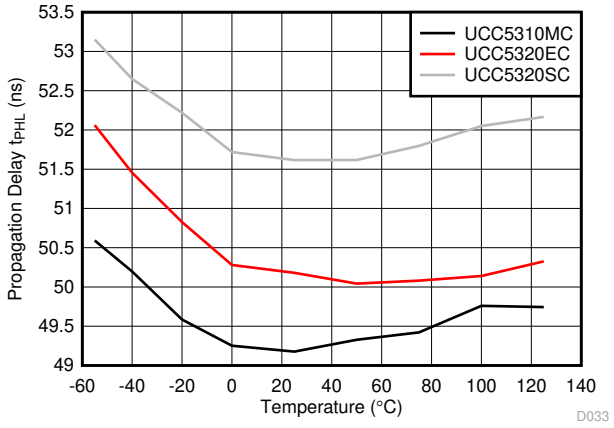

Figure 6-34. Propagation Delay t_{PHL} vs Temperature

6.14 Typical Characteristics (continued)

V_{CC1} = 3.3 V or 5 V, 0.1-µF capacitor from V_{CC1} to GND1, V_{CC2}= 15 V, 1-µF capacitor from V_{CC2} to V_{EE2}, C_{LOAD} = 1 nF, T_A = –40°C to +125°C, (unless otherwise noted)

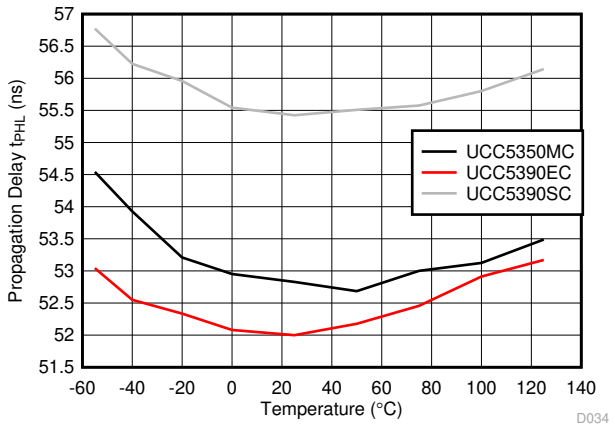

Figure 6-35. Propagation Delay t_{PHL} vs Temperature

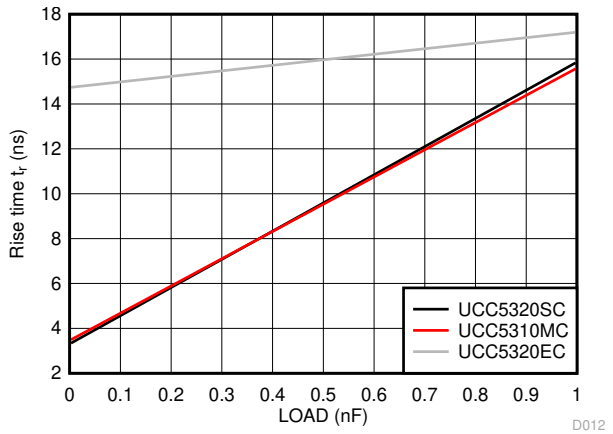

f_{SW} = 1 kHz R_{GH} = 0 Ω R_{GL} = 0 Ω

Figure 6-36. Rise Time vs Load Capacitance

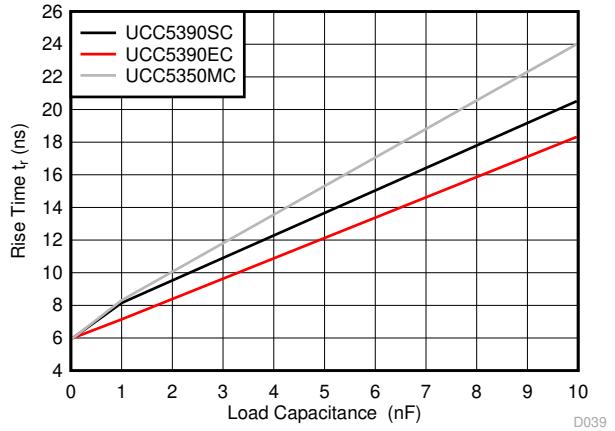

f_{SW} = 1 kHz R_{GH} = 0 Ω R_{GL} = 0 Ω

Figure 6-37. Rise Time vs Load Capacitance

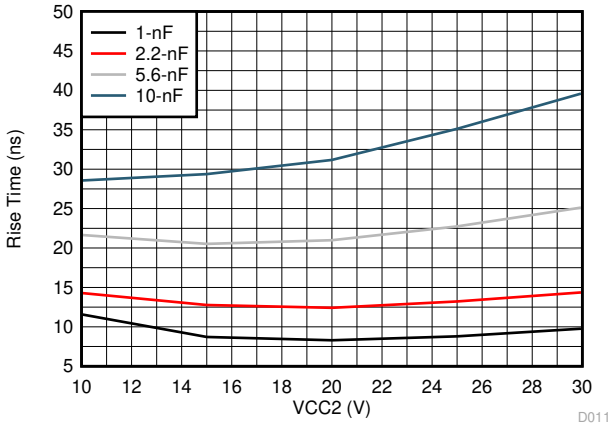

Figure 6-38. UCC5350SBD Rise Time vs C_L and V_{CC2}

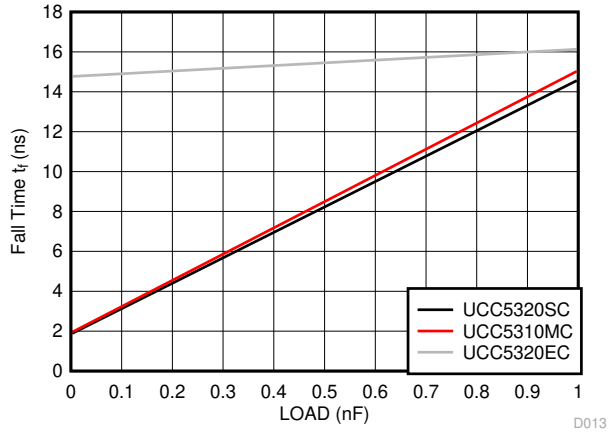

f_{SW} = 1 kHz R_{GH} = 0 Ω R_{GL} = 0 Ω

Figure 6-39. Fall Time vs Load Capacitance

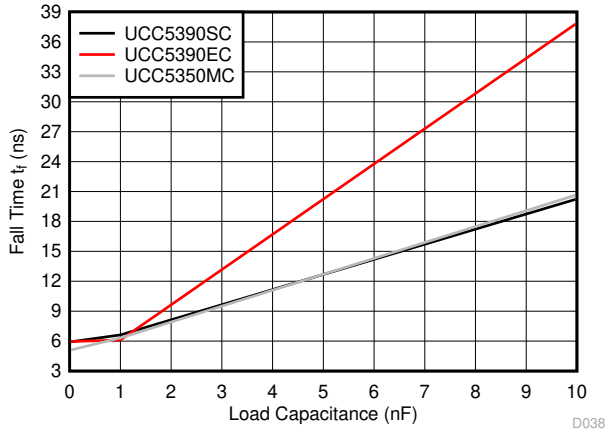

f_{SW} = 1 kHz R_{GH} = 0 Ω R_{GL} = 0 Ω

Figure 6-40. Fall Time vs Load Capacitance

Copyright © 2024 Texas Instruments Incorporated

6.14 Typical Characteristics (continued)

V_{CC1} = 3.3 V or 5 V, 0.1-µF capacitor from V_{CC1} to GND1, V_{CC2}= 15 V, 1-µF capacitor from V_{CC2} to V_{EE2}, C_{LOAD} = 1 nF, T_A = –40°C to +125°C, (unless otherwise noted)

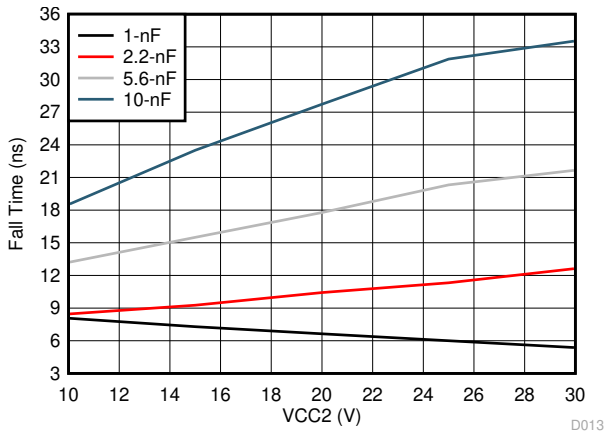

Figure 6-41. UCC5350SBD Fall Time vs C_L and V_{CC2}

7 Parameter Measurement Information

7.1 Propagation Delay, Inverting, and Noninverting Configuration

Figure 7-1 shows the propagation delay OUTH and OUTL for noninverting configurations. Figure 7-2 shows the propagation delay with the inverting configuration. These figures also demonstrate the method used to measure the rise (t_r) and fall (t_f) times.

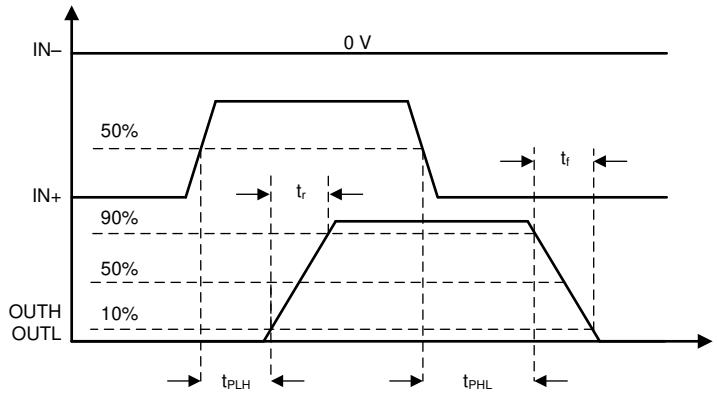

Figure 7-1. OUTH and OUTL Propagation Delay, Noninverting Configuration

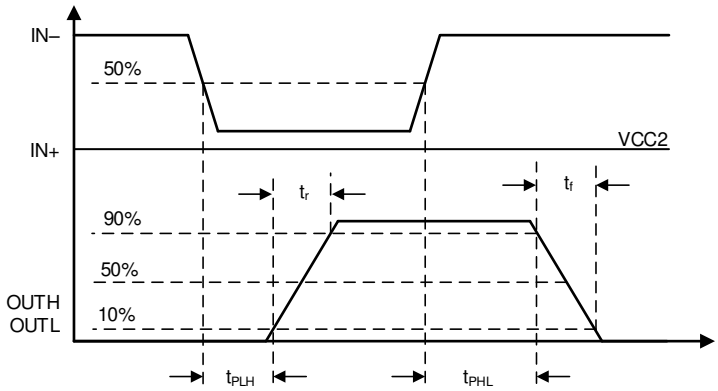

Figure 7-2. OUTH and OUTL Propagation Delay, Inverting Configuration

Copyright © 2024 Texas Instruments Incorporated

7.1.1 CMTI Testing

Figure 7-3, Figure 7-4, and Figure 7-5 are simplified diagrams of the CMTI testing configuration used for each device type.

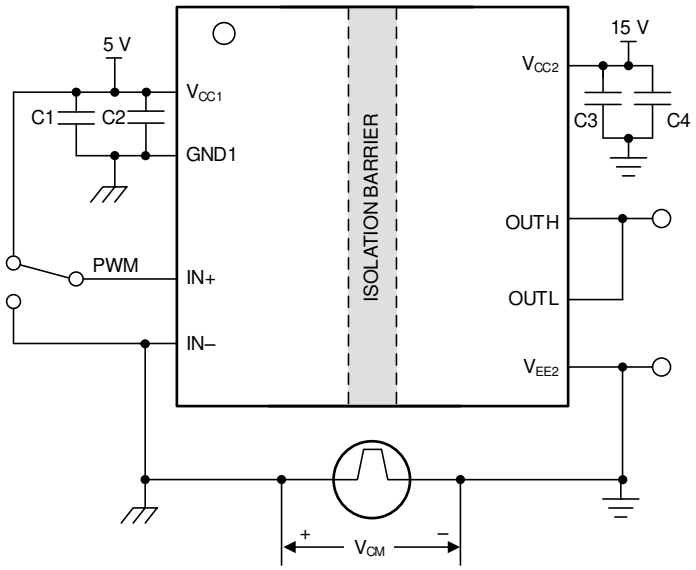

Copyright © 2017, Texas Instruments Incorporated

Figure 7-3. CMTI Test Circuit for Split Output (UCC53x0S)

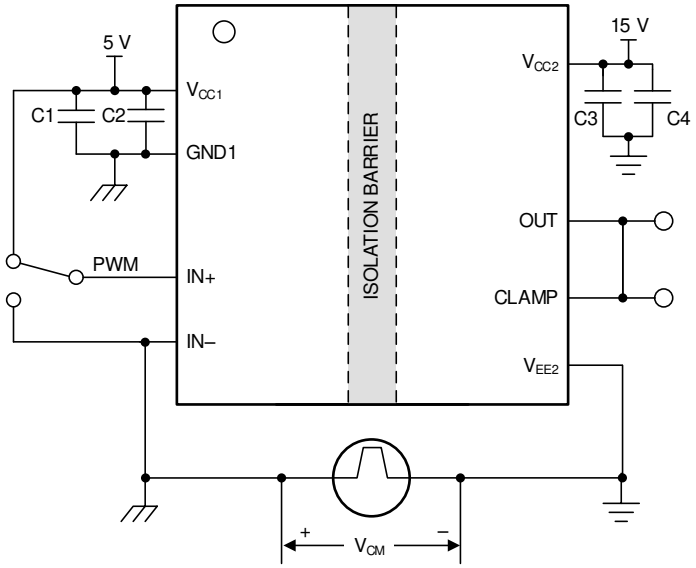

Copyright © 2017, Texas Instruments Incorporated

Figure 7-4. CMTI Test Circuit for Miller Clamp (UCC53x0M)

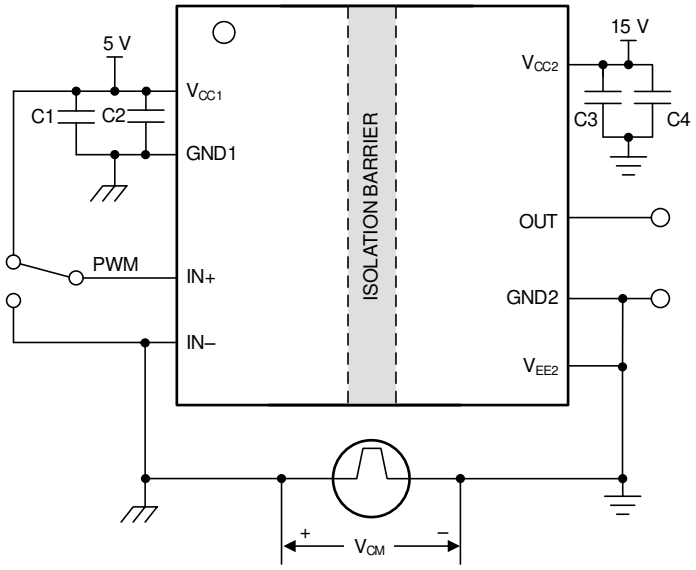

Copyright © 2017, Texas Instruments Incorporated

Figure 7-5. CMTI Test Circuit for UVLO2 with Respect to GND2 (UCC53x0E)

Copyright © 2024 Texas Instruments Incorporated

8 Detailed Description

8.1 Overview

The UCC53x0 family of isolated gate drivers has three variations: split output, Miller clamp, and UVLO2 referenced to GND2 (see Section 4). The isolation inside the UCC53x0 family of devices is implemented with high-voltage SiO_2-based capacitors. The signal across the isolation has an on-off keying (OOK) modulation scheme to transmit the digital data across a silicon dioxide based isolation barrier (see Figure 8-2). The transmitter sends a high-frequency carrier across the barrier to represent one digital state and sends no signal to represent the other digital state. The receiver demodulates the signal after advanced signal conditioning and produces the output through a buffer stage. The UCC53x0 devices also incorporate advanced circuit techniques to maximize the CMTI performance and minimize the radiated emissions from the high frequency carrier and IO buffer switching. The conceptual block diagram of a digital capacitive isolator, Figure 8-1, shows a functional block diagram of a typical channel. Figure 8-2 shows a conceptual detail of how the OOK scheme works.

Figure 8-1 shows how the input signal passes through the capacitive isolation barrier through modulation (OOK) and signal conditioning.

8.2 Functional Block Diagram

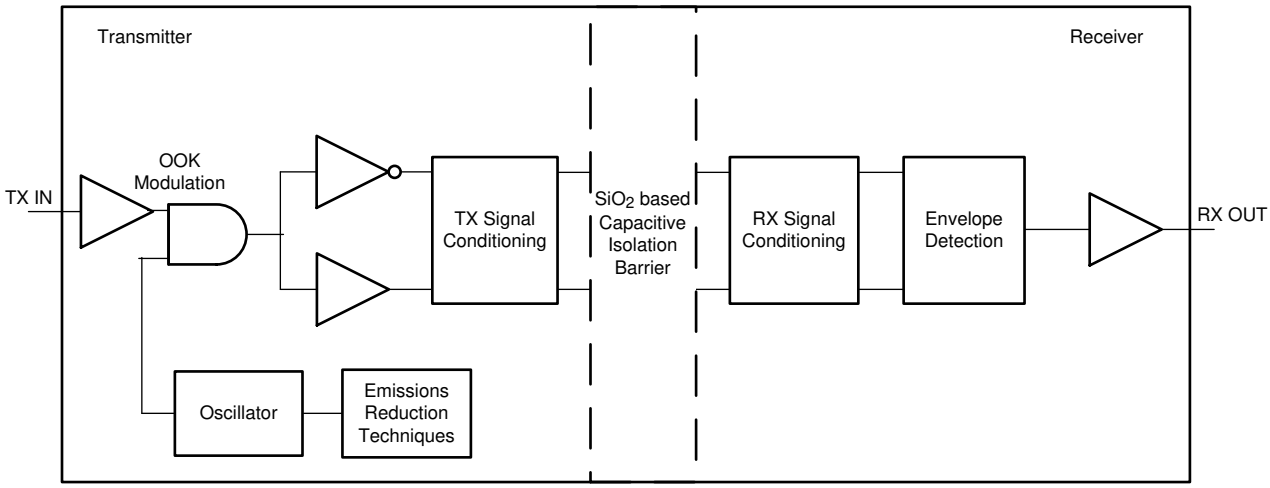

Figure 8-1. Conceptual Block Diagram of a Capacitive Data Channel

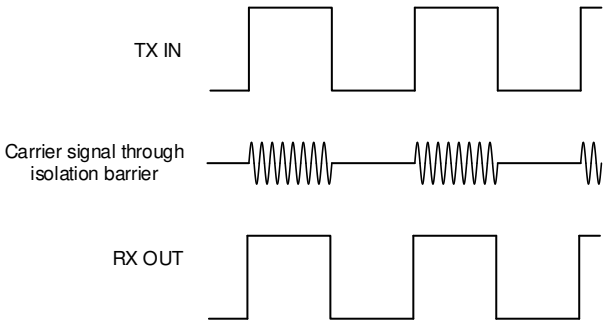

Figure 8-2. On-Off Keying (OOK) Based Modulation Scheme

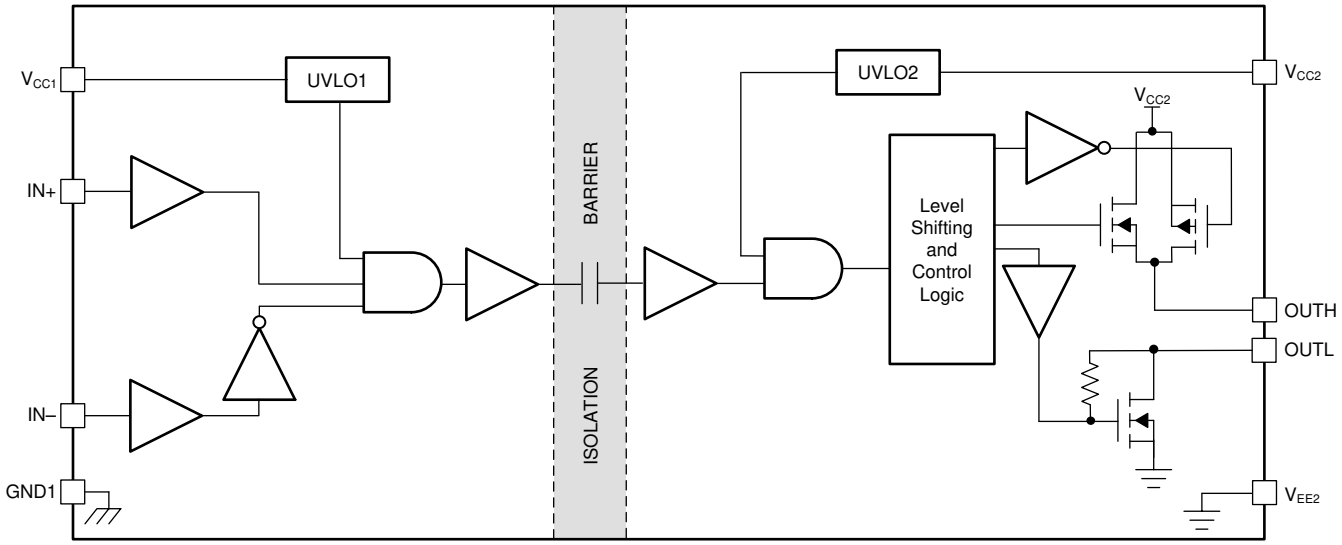

Figure 8-3. Functional Block Diagram — Split Output (UCC53x0S)

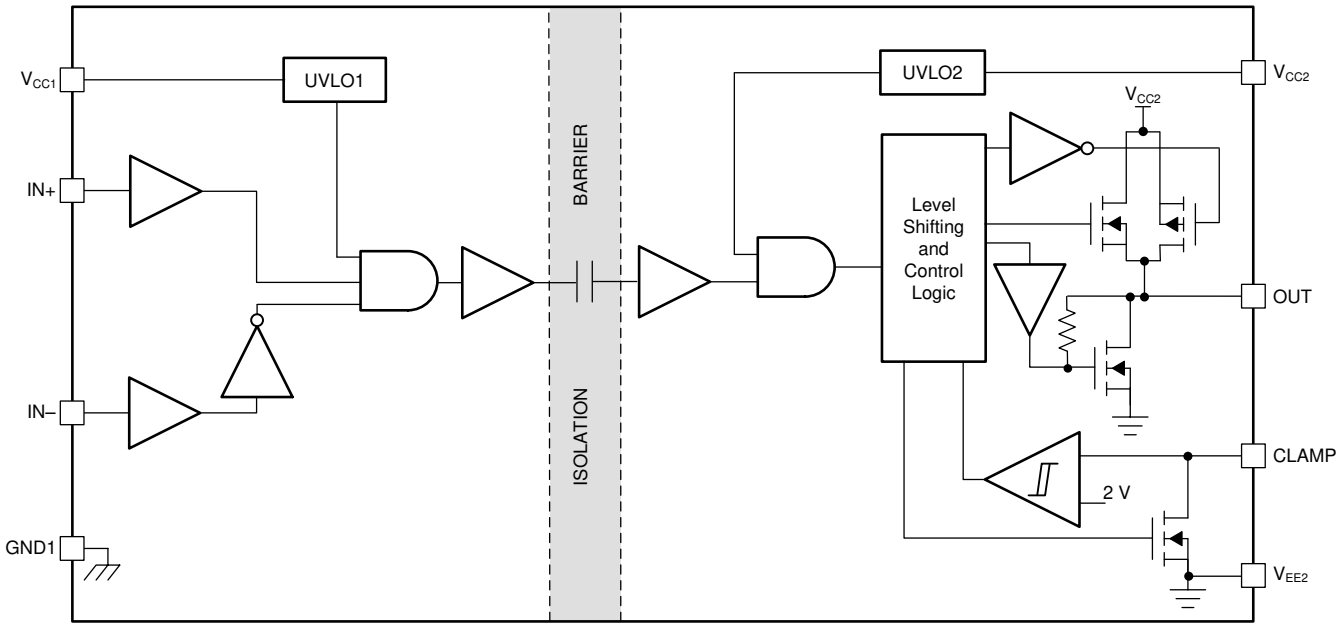

Figure 8-4. Functional Block Diagram — Miller Clamp (UCC53x0M)

Copyright © 2024 Texas Instruments Incorporated

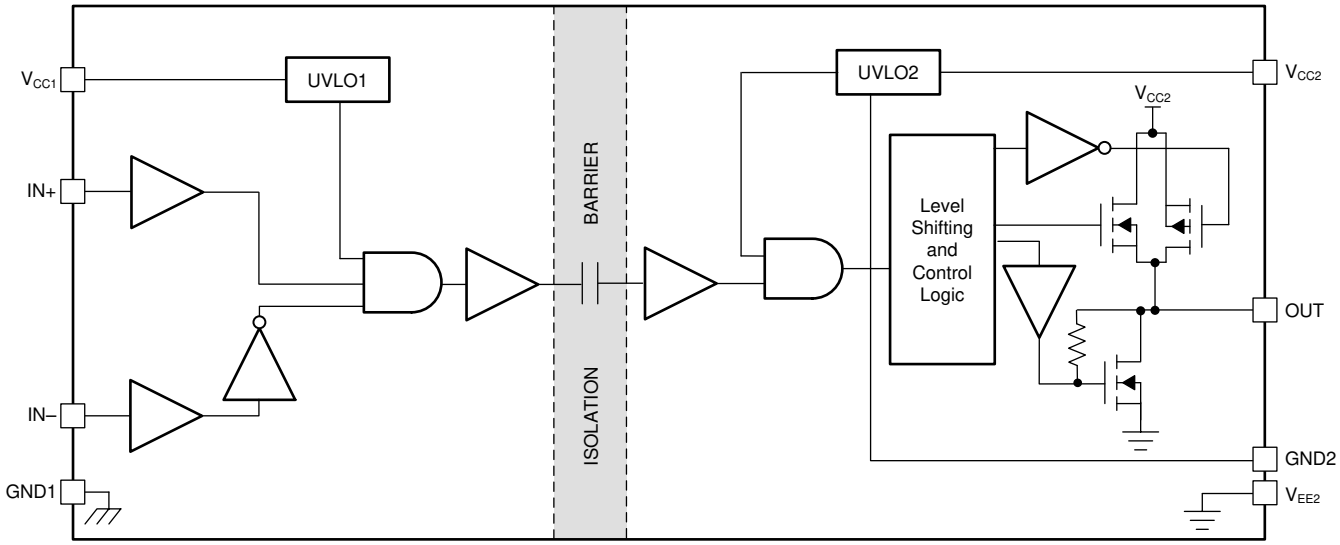

Figure 8-5. Functional Block Diagram — UVLO With Respect to GND2 (UCC53x0E)

8.3 Feature Description

8.3.1 Power Supply

The V_{CC1} input power supply supports a wide voltage range from 3 V to 15 V and the V_{CC2} output supply supports a voltage range from 9.5 V to 33 V. For operation with bipolar supplies, the power device is turned off with a negative voltage on the gate with respect to the emitter or source. This configuration prevents the power device from unintentionally turning on because of current induced from the Miller effect. The typical values of the V_{CC2} and V_{EE2} output supplies for bipolar operation are 15 V and –8 V with respect to GND2 for IGBTs and 20 V and –5 V for SiC MOSFETs.

For operation with unipolar supply, the V_{CC2} supply is connected to 15 V with respect to VEE2 for IGBTs, and 20 V for SiC MOSFETs. The V_{EE2} supply is connected to 0 V. In this use case, the UCC53x0 device with Miller clamping function (UCC53x0M) can be used . The Miller clamping function is implemented by adding a low impedance path between the gate of the power device and the V_{EE2} supply. Miller current sinks through the clamp pin, which clamps the gate voltage to be lower than the turn-on threshold value for the gate.

8.3.2 Input Stage

The input pins (IN+ and IN–) of the UCC53x0 family are based on CMOS-compatible input-threshold logic that is completely isolated from the V_{CC2} supply voltage. The input pins are easy to drive with logic-level control signals (such as those from 3.3-V microcontrollers), because the UCC53x0 family has a typical high threshold ($V_{IT+(IN)}$) of 0.55 × V_{CC1} and a typical low threshold of 0.45 × V_{CC1}. A wide hysteresis ($V_{hys(IN)}$) of 0.1 × V_{CC1} makes for good noise immunity and stable operation. If either of the inputs are left open, 128 kΩ of internal pull-down resistance forces the IN+ pin low and 128 kΩ of internal resistance pulls IN– high. However, TI still recommends grounding an input or tying to VCC1 if it is not being used for improved noise immunity.

Because the input side of the UCC53x0 family is isolated from the output driver, the input signal amplitude can be larger or smaller than V_{CC2} provided that it does not exceed the recommended limit. This feature allows greater flexibility when integrating the gate-driver with control signal sources and allows the user to choose the most efficient V_{CC2} for any gate. However, the amplitude of any signal applied to IN+ or IN– must never be at a voltage higher than V_{CC1}.

Copyright © 2024 Texas Instruments Incorporated

8.3.3 Output Stage

The output stages of the UCC53x0 family feature a pull-up structure that delivers the highest peak-source current when it is most needed which is during the Miller plateau region of the power-switch turn-on transition (when the power-switch drain or collector voltage experiences dV/dt). The output stage pull-up structure features a P-channel MOSFET and an additional pull-up N-channel MOSFET in parallel. The function of the N-channel MOSFET is to provide a brief boost in the peak-sourcing current, which enables fast turn-on. Fast turn-on is accomplished by briefly turning on the N-channel MOSFET during a narrow instant when the output is changing states from low to high. Table 8-1 lists the typical internal resistance values of the pull-up and pull-down structure.

Table 8-1. UCC53x0 On-Resistance

DEVICE OPTION	R_{NMOS}	R_{OH}	R_{OL}	R_{CLAMP}	UNIT
UCC5320SC and UCC5320EC	4.5	12	0.65	Not applicable	Ω
UCC5310MC	4.5	12	1.3	1.3	Ω
UCC5390SC and UCC5390EC	0.76	12	0.13	Not applicable	Ω
UCC5350MC	1.54	12	0.26	0.26	Ω
UCC5350SB	1.54	12	0.26	Not applicable	Ω

The R_{OH} parameter is a DC measurement and is representative of the on-resistance of the P-channel device only. This parameter is only for the P-channel device, because the pull-up N-channel device is held in the OFF state in DC condition and is turned on only for a brief instant when the output is changing states from low to high. Therefore, the effective resistance of the UCC53x0 pull-up stage during this brief turn-on phase is much lower than what is represented by the R_{OH} parameter, which yields a faster turn-on. The turn-on-phase output resistance is the parallel combination $R_{OH} \parallel R_{NMOS}$.

The pull-down structure in the UCC53x0 S and E versions is simply composed of an N-channel MOSFET. For the M version, an additional FET is connected in parallel with the pull-down structure when the CLAMP and OUT pins are connected to the gate of the IGBT or MOSFET. The output voltage swing between V_{CC2} and V_{EE2} provides rail-to-rail operation.

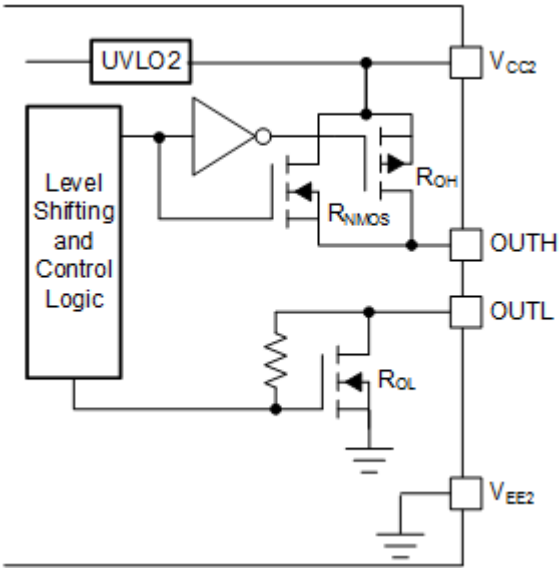

Figure 8-6. Output Stage—S Version

Copyright © 2024 Texas Instruments Incorporated

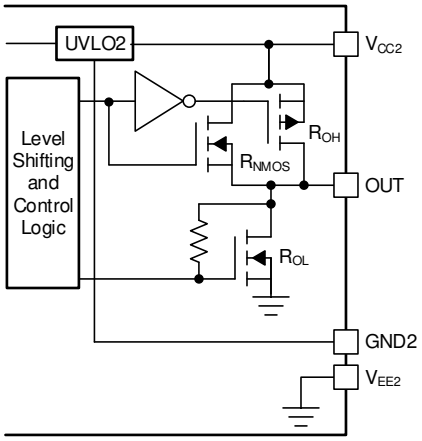

Figure 8-7. Output Stage—E Version

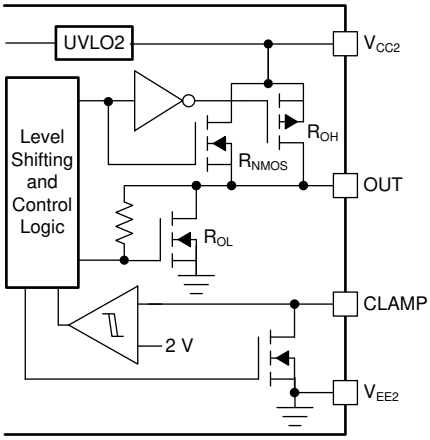

Figure 8-8. Output Stage—M Version

8.3.4 Protection Features

8.3.4.1 Undervoltage Lockout (UVLO)

UVLO functions are implemented for both the V_{CC1} and V_{CC2} supplies between the V_{CC1} and GND1, and V_{CC2} and V_{EE2} pins to prevent an underdriven condition on IGBTs and MOSFETs. When V_{CC} is lower than $V_{IT+\ (UVLO)}$ at device start-up or lower than $V_{IT-(UVLO)}$ after start-up, the voltage-supply UVLO feature holds the effected output low, regardless of the input pins (IN+ and IN–) as shown in Table 8-2. The V_{CC} UVLO protection has a hysteresis feature ($V_{hys(UVLO)}$). This hysteresis prevents chatter when the power supply produces ground noise; this allows the device to permit small drops in bias voltage, which occurs when the device starts switching and operating current consumption increases suddenly. Figure 8-9 shows the UVLO functions.

Table 8-2. UCC53x0 V_{CC1} UVLO Logic

CONDITION	INPUTS		OUTPUTS	
	IN+	IN–	OUTH	OUT, OUTL
V_{CC1} – GND1 < $V_{IT+(UVLO1)}$ during device start-up	H	L	Hi-Z	L
	L	H	Hi-Z	L
	H	H	Hi-Z	L
	L	L	Hi-Z	L

Table 8-2. UCC53x0 V_{CC1} UVLO Logic (continued)

CONDITION	INPUTS		OUTPUTS	
	IN+	IN–	OUTH	OUT, OUTL
V_{CC1} – GND1 < $V_{IT-(UVLO1)}$ after device start-up	H	L	Hi-Z	L
	L	H	Hi-Z	L
	H	H	Hi-Z	L
	L	L	Hi-Z	L

Table 8-3. UCC53x0 V_{CC2} UVLO Logic

CONDITION	INPUTS		OUTPUTS	
	IN+	IN–	OUTH	OUT, OUTL
V_{CC2} – V_{EE2} < $V_{IT+(UVLO2)}$ during device start-up	H	L	Hi-Z	L
	L	H	Hi-Z	L
	H	H	Hi-Z	L
	L	L	Hi-Z	L
V_{CC2} – V_{EE2} < $V_{IT-(UVLO2)}$ after device start-up	H	L	Hi-Z	L
	L	H	Hi-Z	L
	H	H	Hi-Z	L
	L	L	Hi-Z	L

When V_{CC1} or V_{CC2} drops below the UVLO1 or UVLO2 threshold, a delay, t_{UVLO1_rec} or t_{UVLO2_rec}, occurs on the output when the supply voltage rises above $V_{IT+(UVLO)}$ or $V_{IT+(UVLO2)}$ again. Figure 8-9 shows this delay.

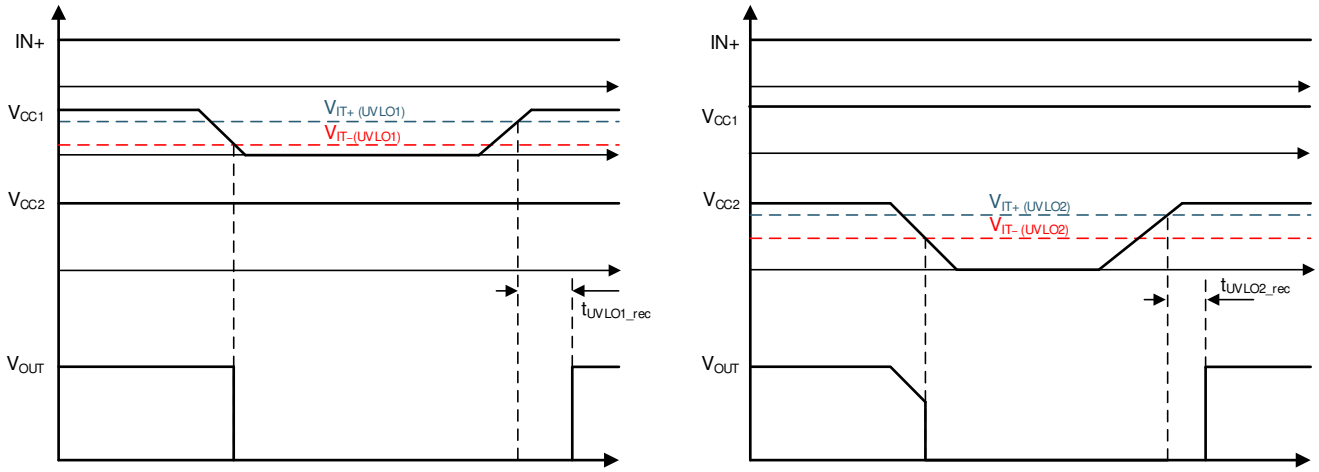

Figure 8-9. UVLO Functions

8.3.4.2 Active Pulldown

The active pull-down function is used to pull the IGBT or MOSFET gate to the low state when no power is connected to the V_{CC2} supply. This feature prevents false IGBT and MOSFET turn-on on the OUT and CLAMP pins by clamping the output to approximately 2 V.

When the output stages of the driver are in an unbiased or UVLO condition, the driver outputs are held low by an active clamp circuit that limits the voltage rise on the driver outputs. In this condition, the upper PMOS is resistively held off by a pull-up resistor while the lower NMOS gate is tied to the driver output through a 500-kΩ resistor. In this configuration, the output is effectively clamped to the threshold voltage of the lower NMOS device, which is approximately 1.5 V when no bias power is available.

Copyright © 2024 Texas Instruments Incorporated

8.3.4.3 Short-Circuit Clamping

The short-circuit clamping function is used to clamp voltages at the driver output and pull the active Miller clamp pins slightly higher than the V_{CC2} voltage during short-circuit conditions. The short-circuit clamping function helps protect the IGBT or MOSFET gate from overvoltage breakdown or degradation. The short-circuit clamping function is implemented by adding a diode connection between the dedicated pins and the V_{CC2} pin inside the driver. The internal diodes can conduct up to 500-mA current for a duration of 10 µs and a continuous current of 20 mA. Use external Schottky diodes to improve current conduction capability as needed.

8.3.4.4 Active Miller Clamp (UCC53x0M)

The active Miller-clamp function helps to prevent a false turn-on of the power switches caused by Miller current in applications where a unipolar power supply is used. The active Miller-clamp function is implemented by adding a low impedance path between the power-switch gate terminal and ground (V_{EE2}) to sink the Miller current. With the Miller-clamp function, the power-switch gate voltage is clamped to less than 2 V during the off state. Figure 9-2 shows a typical application circuit of UCC5310M and UCC5350M.

8.4 Device Functional Modes

Table 8-4 lists the functional modes for the UCC53x0 devices assuming V_{CC1} and V_{CC2} are in the recommended range.

Table 8-4. Function Table for UCC53x0S

IN+	IN–	OUTH	OUTL
Low	X	Hi-Z	Low
X	High	Hi-Z	Low
High	Low	High	High-Z

Table 8-5. Function Table for UCC53x0M and UCC53x0E

IN+	IN–	OUT
Low	X	Low
X	High	Low
High	Low	High

8.4.1 ESD Structure

Figure 8-10 shows the multiple diodes involved in the ESD protection components of the UCC53x0 devices. This provides pictorial representation of the absolute maximum rating for the device.

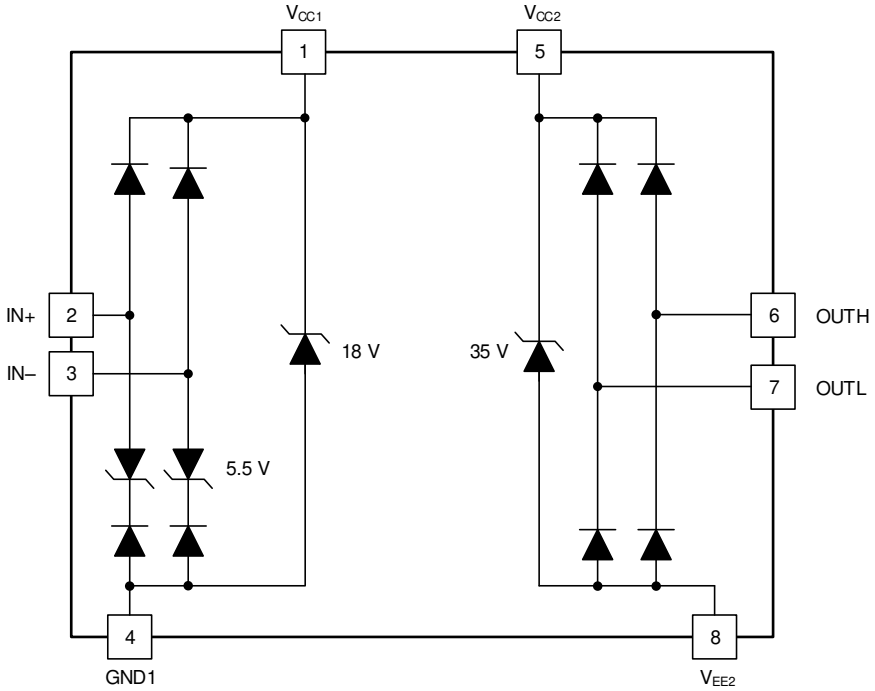

Figure 8-10. ESD Structure

Copyright © 2024 Texas Instruments Incorporated

9 Application and Implementation

Note

Information in the following applications sections is not part of the TI component specification, and TI does not warrant its accuracy or completeness. TI's customers are responsible for determining suitability of components for their purposes, as well as validating and testing their design implementation to confirm system functionality.

9.1 Application Information

The UCC53x0 is a family of simple, isolated gate drivers for power semiconductor devices, such as MOSFETs, IGBTs, or SiC MOSFETs. The family of devices is intended for use in applications such as motor control, solar inverters, switched-mode power supplies, and industrial inverters.

The UCC53x0 family of devices has three pinout configurations, featuring split outputs, Miller clamp, and UVLO with reference to GND2. The UCC5320SC, UCC5350SB, and UCC5390SC have a split output, OUTH and OUTL. The two pins can be used to separately decouple the power transistor turnon and turnoff commutations. The UCC5310MC and UCC5350MC feature active Miller clamping, which can be used to prevent false turn-on of the power transistors induced by the Miller current. The UCC5320EC and UCC5390EC offer true UVLO protection by monitoring the voltage between the V_{CC2} and GND2 pins to prevent the power transistors from operating in a saturation region. The UCC53x0 family of devices comes in an 8-pin D and 8-pin DWV package options and have a creepage, or clearance, of 4 mm and 8.5 mm respectively, which are suitable for applications where basic or reinforced isolation is required. Different drive strengths enable a simple driver platform to be used for applications demanding power transistors with different power ratings. Specifically, the UCC5390 device offers a 10-A minimum drive current which can help remove the external current buffer used to drive high power transistors.

9.2 Typical Application

The circuits in Figure 9-1, Figure 9-2, and Figure 9-3 show a typical application for driving IGBTs.

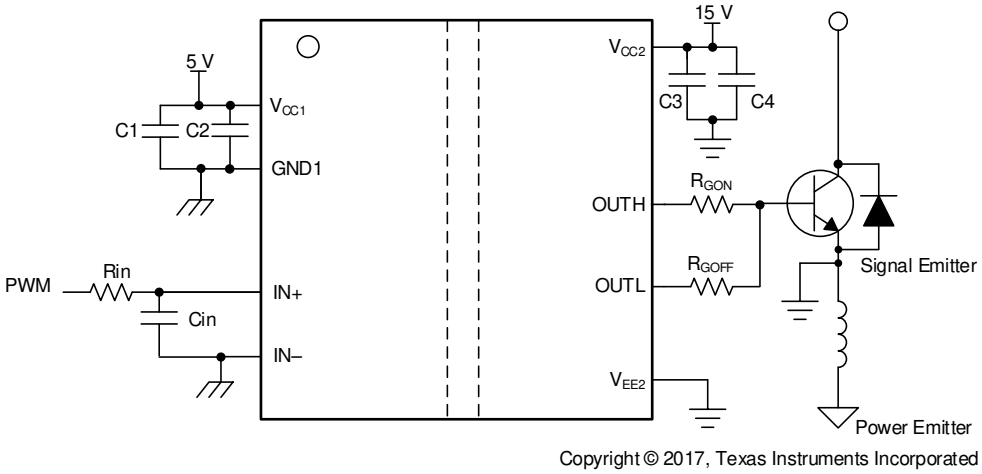

Figure 9-1. Typical Application Circuit for UCC53x0S to Drive IGBT

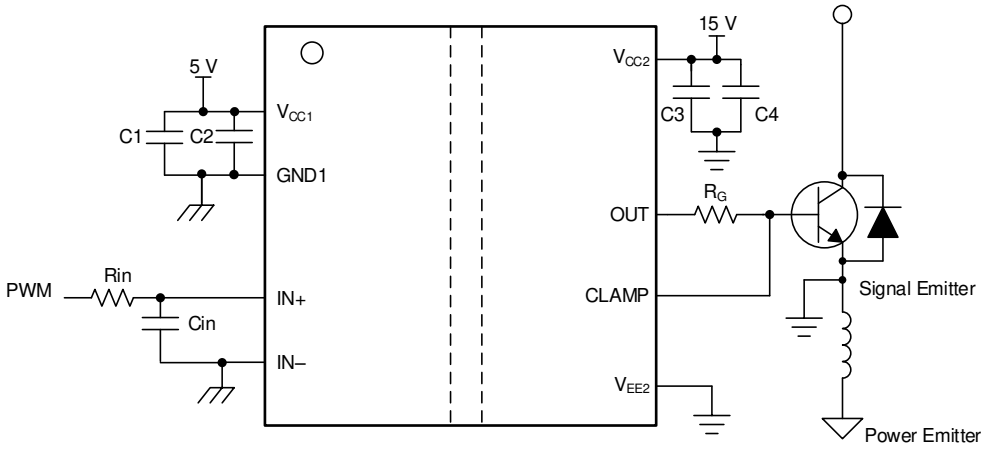

Copyright © 2017, Texas Instruments Incorporated

Figure 9-2. Typical Application Circuit for UCC5310M and UCC5350M to Drive IGBT

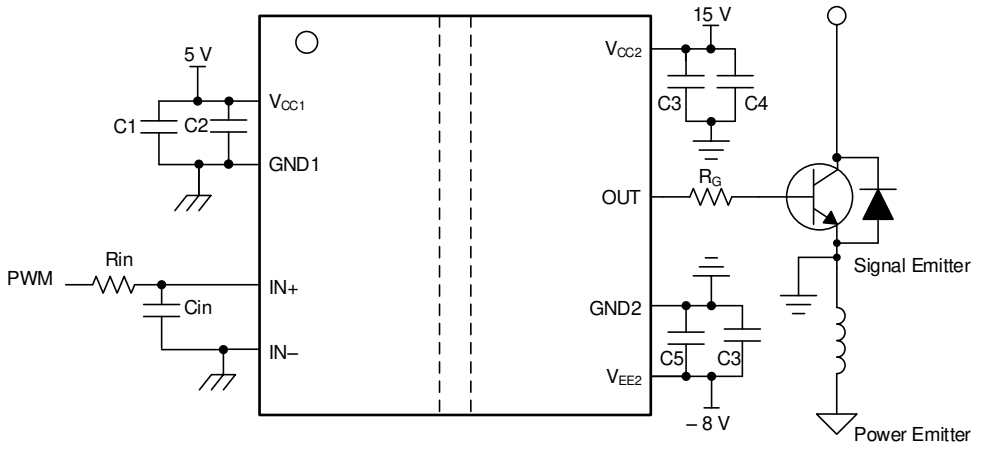

Copyright © 2018, Texas Instruments Incorporated

Figure 9-3. Typical Application Circuit for UCC5320E and UCC5390E to Drive IGBT

9.2.1 Design Requirements

Table 9-1 lists the recommended conditions to observe the input and output of the UCC5320S split-output gate driver with the IN– pin tied to the GND1 pin.

Table 9-1. UCC5320S Design Requirements

PARAMETER	VALUE	UNIT
V_{CC1}	3.3	V
V_{CC2}	15	V
IN+	3.3	V
IN–	GND1	-
Switching frequency	10	kHz
IGBT	IKW50N65H5	-

Copyright © 2024 Texas Instruments Incorporated

9.2.2 Detailed Design Procedure

9.2.2.1 Designing IN+ and IN– Input Filter

TI recommends that users avoid shaping the signals to the gate driver in an attempt to slow down (or delay) the signal at the output. However, a small input filter, R_{IN}-C_{IN}, can be used to filter out the ringing introduced by nonideal layout or long PCB traces.

Such a filter should use an R_{IN} resistor with a value from 0 Ω to 100 Ω and a C_{IN} capacitor with a value from 10 pF to 1000 pF. In the example, the selected value for R_{IN} is 51 Ω and C_{IN} is 33 pF, with a corner frequency of approximately 100 MHz.

When selecting these components, pay attention to the trade-off between good noise immunity and propagation delay.

9.2.2.2 Gate-Driver Output Resistor

The external gate-driver resistors, $R_{G(ON)}$ and $R_{G(OFF)}$ are used to:

1. Limit ringing caused by parasitic inductances and capacitances
2. Limit ringing caused by high voltage or high current switching dv/dt, di/dt, and body-diode reverse recovery
3. Fine-tune gate drive strength, specifically peak sink and source current to optimize the switching loss
4. Reduce electromagnetic interference (EMI)

The output stage has a pull-up structure consisting of a P-channel MOSFET and an N-channel MOSFET in parallel. The combined peak source current is 4.3 A for the UCC5320 family and 17 A for the UCC5390 family and 17 A for the UCC5390 family. Use Equation 1 to estimate the peak source current using the UCC5320S as an example.

$$I_{OH} = \min\left(4.3\ \text{A}, \frac{V_{CC2}}{R_{NMOS} \,||\, R_{OH} + R_{ON} + R_{GFET_Int}}\right) \tag{1}$$

where

- R_{ON} is the external turn-on resistance.
- R_{GFET_Int} is the power transistor internal gate resistance, found in the power transistor data sheet. We will assume 0Ω for our example.
- I_{OH} is the peak source current which is the minimum value between 4.3 A, the gate-driver peak source current, and the calculated value based on the gate-drive loop resistance.

In this example, the peak source current is approximately 1.8 A as calculated in Equation 2.

$$I_{OH} = \frac{V_{CC2}}{R_{NMOS} \,||\, R_{OH} + R_{ON} + R_{GFET_Int}} = \frac{15\ \text{V}}{4.5\ \Omega \,||\, 12\ \Omega + 5.1\ \Omega + 0\ \Omega} \approx 1.8\ \text{A} \tag{2}$$

Similarly, use Equation 3 to calculate the peak sink current.

$$I_{OL} = \min\left(4.4\ \text{A}, \frac{V_{CC2}}{R_{OL} + R_{OFF} + R_{GFET_Int}}\right) \tag{3}$$

where

- R_{OFF} is the external turn-off resistance.
- I_{OL} is the peak sink current which is the minimum value between 4.4 A, the gate-driver peak sink current, and the calculated value based on the gate-drive loop resistance.

In this example, the peak sink current is the minimum value between Equation 4 and 4.4 A.

$$I_{OL} = \frac{V_{CC2}}{R_{OL} + R_{OFF} + R_{GFET_Int}} = \frac{15\ V}{0.65\ \Omega + 10\ \Omega + 0\ \Omega} \approx 1.4\ A \quad (4)$$

Note

The estimated peak current is also influenced by PCB layout and load capacitance. Parasitic inductance in the gate-driver loop can slow down the peak gate-drive current and introduce overshoot and undershoot. Therefore, TI strongly recommends that the gate-driver loop should be minimized. Conversely, the peak source and sink current is dominated by loop parasitics when the load capacitance (C_{ISS}) of the power transistor is very small (typically less than 1 nF) because the rising and falling time is too small and close to the parasitic ringing period.

9.2.2.3 Estimate Gate-Driver Power Loss

The total loss, P_G, in the gate-driver subsystem includes the power losses (P_{GD}) of the UCC53x0 device and the power losses in the peripheral circuitry, such as the external gate-drive resistor.

The P_{GD} value is the key power loss which determines the thermal safety-related limits of the UCC53x0 device, and it can be estimated by calculating losses from several components.

The first component is the static power loss, P_{GDQ}, which includes quiescent power loss on the driver as well as driver self-power consumption when operating with a certain switching frequency. The P_{GDQ} parameter is measured on the bench with no load connected to the OUT or OUTH and OUTL pins at a given V_{CC1}, V_{CC2}, switching frequency, and ambient temperature. In this example, V_{CC1} is 3.3V and V_{CC2} is 15 V. The current on each power supply, with PWM switching from 0 V to 3.3 V at 10 kHz, is measured to be I_{CC1} = 1.67 mA and I_{CC2} = 1.11 mA . Therefore, use Equation 5 to calculate P_{GDQ}.

$$P_{GDQ} = V_{CC1} \times I_{VCC1} + V_{CC2} \times I_{CC2} \approx 22mW \quad (5)$$

The second component is the switching operation loss, P_{GDO}, with a given load capacitance which the driver charges and discharges the load during each switching cycle. Use Equation 6 to calculate the total dynamic loss from load switching, P_{GSW}.

$$P_{GSW} = V_{CC2} \times Q_G \times f_{SW} \quad (6)$$

where

- Q_G is the gate charge of the power transistor at V_{CC2}.

So, for this example application the total dynamic loss from load switching is approximately 18 mW as calculated in Equation 7.

$$P_{GSW} = 15\ V \times 120\ nC \times 10\ kHz = 18\ mW \quad (7)$$

Q_G represents the total gate charge of the power transistor switching 520 V at 50 A, and is subject to change with different testing conditions. The UCC5320S gate-driver loss on the output stage, P_{GDO}, is part of P_{GSW}. P_{GDO} is equal to P_{GSW} if the external gate-driver resistance and power-transistor internal resistance are 0 Ω, and all the gate driver-loss will be dissipated inside the UCC5320S. If an external turn-on and turn-off resistance exists, the total loss is distributed between the gate driver pull-up/down resistance, external gate resistance, and power-transistor internal resistance. Importantly, the pull-up/down resistance is a linear and fixed resistance if the source/sink current is not saturated to 4.3 A/4.4 A, however, it will be non-linear if the source/sink current is saturated. Therefore, P_{GDO} is different in these two scenarios.

Case 1 - Linear Pull-Up/Down Resistor:

Copyright © 2024 Texas Instruments Incorporated

$$P_{GDO} = \frac{P_{GSW}}{2}\left(\frac{R_{OH} \parallel R_{NMOS}}{R_{OH} \parallel R_{NMOS} + R_{ON} + R_{GFET_Int}} + \frac{R_{OL}}{R_{OL} + R_{OFF} + R_{GFET_Int}}\right) \tag{8}$$

In this design example, all the predicted source and sink currents are less than 4.3 A and 4.4 A, therefore, use Equation 9 to estimate the UCC53x0 gate-driver loss.

$$P_{GDO} = \frac{18\ \text{mW}}{2}\left(\frac{12\ \Omega \parallel 4.5\ \Omega}{12\ \Omega \parallel 4.5\ \Omega + 5.1\ \Omega + 0\ \Omega} + \frac{0.65\ \Omega}{0.65\ \Omega + 10\ \Omega + 0\ \Omega}\right) \approx 4.1\ \text{mW} \tag{9}$$

Case 2 - Nonlinear Pull-Up/Down Resistor:

$$P_{GDO} = f_{SW} \times \left[4.3\ \text{A} \times \int_0^{T_{R_Sys}} \left(V_{CC2} - V_{OUTH}(t)\right)dt + 4.4\ \text{A} \times \int_0^{T_{F_Sys}} V_{OUTL}(t)dt\right] \tag{10}$$

where

- $V_{OUTH/L(t)}$ is the gate-driver OUTH and OUTL pin voltage during the turnon and turnoff period. In cases where the output is saturated for some time, this value can be simplified as a constant-current source (4.3 A at turnon and 4.4 A at turnoff) charging or discharging a load capacitor. Then, the $V_{OUTH/L(t)}$ waveform will be linear and the T_{R_Sys} and T_{F_Sys} can be easily predicted.

For some scenarios, if only one of the pull-up or pull-down circuits is saturated and another one is not, the P_{GDO} is a combination of case 1 and case 2, and the equations can be easily identified for the pull-up and pull-down based on this discussion.

Use Equation 11 to calculate the total gate-driver loss dissipated in the UCC53x0 gate driver, P_{GD}.

$$P_{GD} = P_{GDQ} + P_{GDO} = 22\text{mW} + 4.1\ \text{mW} = 26.1\ \text{mW} \tag{11}$$

9.2.2.4 Estimating Junction Temperature

Use the equation below to estimate the junction temperature (T_J) of the UCC53x0 family.

$$T_J = T_C + \Psi_{JT} \times P_{GD} \tag{12}$$

where

- T_C is the UCC53x0 case-top temperature measured with a thermocouple or some other instrument.
- Ψ_{JT} is the junction-to-top characterization parameter from the Thermal Information table.

Using the junction-to-top characterization parameter (Ψ_{JT}) instead of the junction-to-case thermal resistance ($R_{\theta JC}$) can greatly improve the accuracy of the junction temperature estimation. The majority of the thermal energy of most ICs is released into the PCB through the package leads, whereas only a small percentage of the total energy is released through the top of the case (where thermocouple measurements are usually conducted). The $R_{\theta JC}$ resistance can only be used effectively when most of the thermal energy is released through the case, such as with metal packages or when a heat sink is applied to an IC package. In all other cases, use of $R_{\theta JC}$ will inaccurately estimate the true junction temperature. The Ψ_{JT} parameter is experimentally derived by assuming that the dominant energy leaving through the top of the IC will be similar in both the testing environment and the application environment. As long as the recommended layout guidelines are observed, junction temperature estimations can be made accurately to within a few degrees Celsius.

9.2.3 Selecting V_{CC1} and V_{CC2} Capacitors

Bypass capacitors for the V_{CC1} and V_{CC2} supplies are essential for achieving reliable performance. TI recommends choosing low-ESR and low-ESL, surface-mount, multi-layer ceramic capacitors (MLCC) with sufficient voltage ratings, temperature coefficients, and capacitance tolerances.

Note

DC bias on some MLCCs will impact the actual capacitance value. For example, a 25-V, 1-µF X7R capacitor is measured to be only 500 nF when a DC bias of 15-V_{DC} is applied.

9.2.3.1 Selecting a V_{CC1} Capacitor

A bypass capacitor connected to the V_{CC1} pin supports the transient current required for the primary logic and the total current consumption, which is only a few milliamperes. Therefore, a 50-V MLCC with over 100 nF is recommended for this application. If the bias power-supply output is located a relatively long distance from the V_{CC1} pin, a tantalum or electrolytic capacitor with a value greater than 1 µF should be placed in parallel with the MLCC.

9.2.3.2 Selecting a V_{CC2} Capacitor

A 50-V, 10-µF MLCC and a 50-V, 0.22-µF MLCC are selected for the C_{VCC2} capacitor. If the bias power supply output is located a relatively long distance from the V_{CC2} pin, a tantalum or electrolytic capacitor with a value greater than 10 µF should be used in parallel with C_{VCC2}.

9.2.3.3 Application Circuits with Output Stage Negative Bias

When parasitic inductances are introduced by nonideal PCB layout and long package leads (such as TO-220 and TO-247 type packages), ringing in the gate-source drive voltage of the power transistor could occur during high di/dt and dv/dt switching. If the ringing is over the threshold voltage, unintended turn-on and shoot-through could occur. Applying a negative bias on the gate drive is a popular way to keep such ringing below the threshold. A few examples of implementing negative gate-drive bias follow.

Figure 9-4 shows the first example with negative bias turn-off on the output using a Zener diode on the isolated power-supply output stage. The negative bias is set by the Zener diode voltage. If the isolated power supply is equal to 20 V, the turn-off voltage is –5.1 V and the turn-on voltage is 20 V – 5.1 V ≈ 15 V.

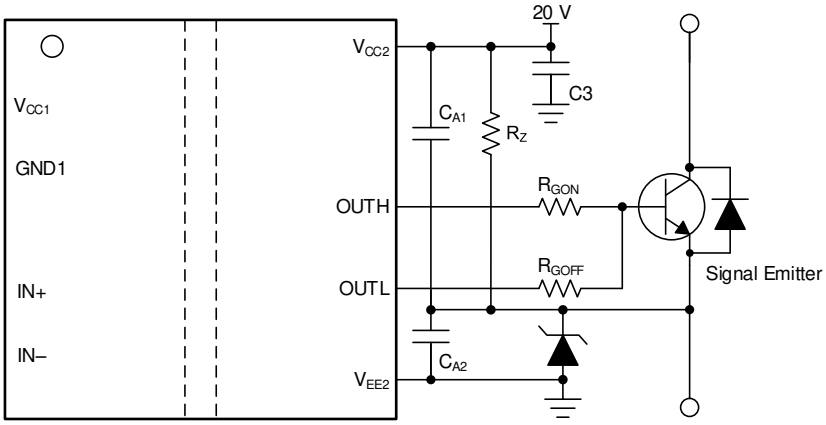

Copyright © 2017, Texas Instruments Incorporated

Figure 9-4. Negative Bias With Zener Diode on Iso-Bias Power-Supply Output

Figure 9-5 shows another example which uses two supplies (or single-input, double-output power supply). The power supply across V_{CC2} and GND2 determines the positive drive output voltage and the power supply across V_{EE2} and GND2 determines the negative turn-off voltage. This solution requires more power supplies than the first example, however, it provides more flexibility when setting the positive and negative rail voltages.

Copyright © 2024 Texas Instruments Incorporated

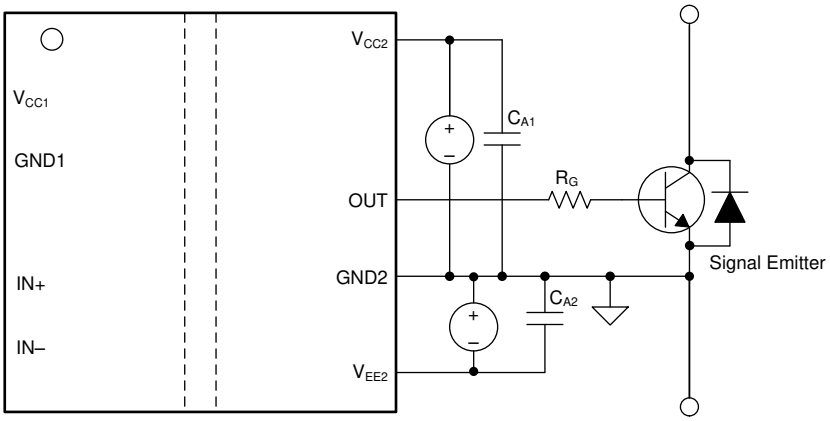

Copyright © 2017, Texas Instruments Incorporated

Figure 9-5. Negative Bias With Two Iso-Bias Power Supplies (UCC5320E and UCC5390E)

9.2.4 Application Curve

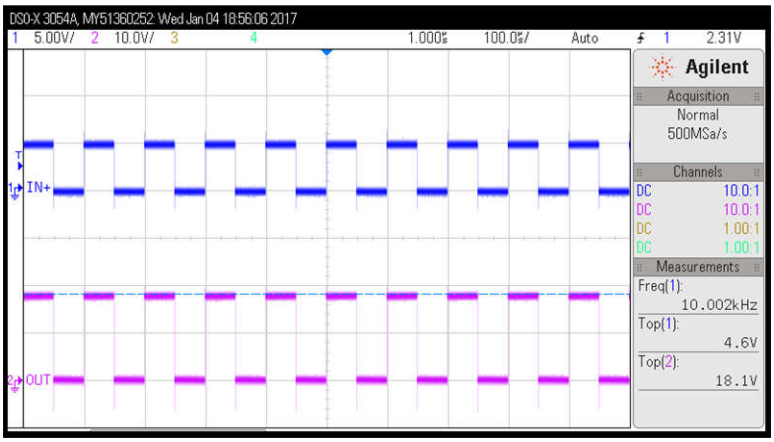

V_{CC2} = 20 V V_{EE2} = GND f_{SW} = 10 kHz

Figure 9-6. PWM Input and Gate Voltage Waveform

10 Power Supply Recommendations

The recommended input supply voltage (V_{CC1}) for the UCC53x0 device is from 3 V to 15 V. The lower limit of the range of output bias-supply voltage (V_{CC2}) is determined by the internal UVLO protection feature of the device. The V_{CC1} and V_{CC2} voltages should not fall below their respective UVLO thresholds for normal operation, or else the gate-driver outputs can become clamped low for more than 50 µs by the UVLO protection feature. For more information on UVLO, see Section 8.3.4.1. The higher limit of the V_{CC2} range depends on the maximum gate voltage of the power device that is driven by the UCC53x0 device, and should not exceed the recommended maximum V_{CC2} of 33 V. A local bypass capacitor should be placed between the V_{CC2} and V_{EE2} pins, with a value of 220-nF to 10-µF for device biasing. TI recommends placing an additional 100-nF capacitor in parallel with the device biasing capacitor for high frequency filtering. Both capacitors should be positioned as close to the device as possible. Low-ESR, ceramic surface-mount capacitors are recommended. Similarly, a bypass capacitor should also be placed between the V_{CC1} and GND1 pins. Given the small amount of current drawn by the logic circuitry within the input side of the UCC53x0 device, this bypass capacitor has a minimum recommended value of 100 nF.

If only a single, primary-side power supply is available in an application, isolated power can be generated for the secondary side with the help of a transformer driver such as Texas Instruments' SN6501 or SN6505A. For such

applications, detailed power supply design and transformer selection recommendations are available in *SN6501 Transformer Driver for Isolated Power Supplies* data sheet and *SN6505A Low-Noise 1-A Transformer Drivers for Isolated Power Supplies* data sheet.

11 Layout

11.1 Layout Guidelines

Designers must pay close attention to PCB layout to achieve optimum performance for the UCC53x0. Some key guidelines are:

- Component placement:
  - Low-ESR and low-ESL capacitors must be connected close to the device between the V_{CC1} and GND1 pins and between the V_{CC2} and V_{EE2} pins to bypass noise and to support high peak currents when turning on the external power transistor.
  - To avoid large negative transients on the V_{EE2} pins connected to the switch node, the parasitic inductances between the source of the top transistor and the source of the bottom transistor must be minimized.
- Grounding considerations:
  - Limiting the high peak currents that charge and discharge the transistor gates to a minimal physical area is essential. This limitation decreases the loop inductance and minimizes noise on the gate terminals of the transistors. The gate driver must be placed as close as possible to the transistors.
- High-voltage considerations:
  - To ensure isolation performance between the primary and secondary side, avoid placing any PCB traces or copper below the driver device. A PCB cutout or groove is recommended in order to prevent contamination that may compromise the isolation performance.
- Thermal considerations:
  - A large amount of power may be dissipated by the UCC53x0 if the driving voltage is high, the load is heavy, or the switching frequency is high (for more information, see Section 9.2.2.3). Proper PCB layout can help dissipate heat from the device to the PCB and minimize junction-to-board thermal impedance (θ_{JB}).
  - Increasing the PCB copper connecting to the V_{CC2} and V_{EE2} pins is recommended, with priority on maximizing the connection to V_{EE2}. However, the previously mentioned high-voltage PCB considerations must be maintained.
  - If the system has multiple layers, TI also recommends connecting the V_{CC2} and V_{EE2} pins to internal ground or power planes through multiple vias of adequate size. These vias should be located close to the IC pins to maximize thermal conductivity. However, keep in mind that no traces or coppers from different high voltage planes are overlapping.

Copyright © 2024 Texas Instruments Incorporated

11.2 Layout Example

Figure 11-1 shows a PCB layout example with the signals and key components labeled.

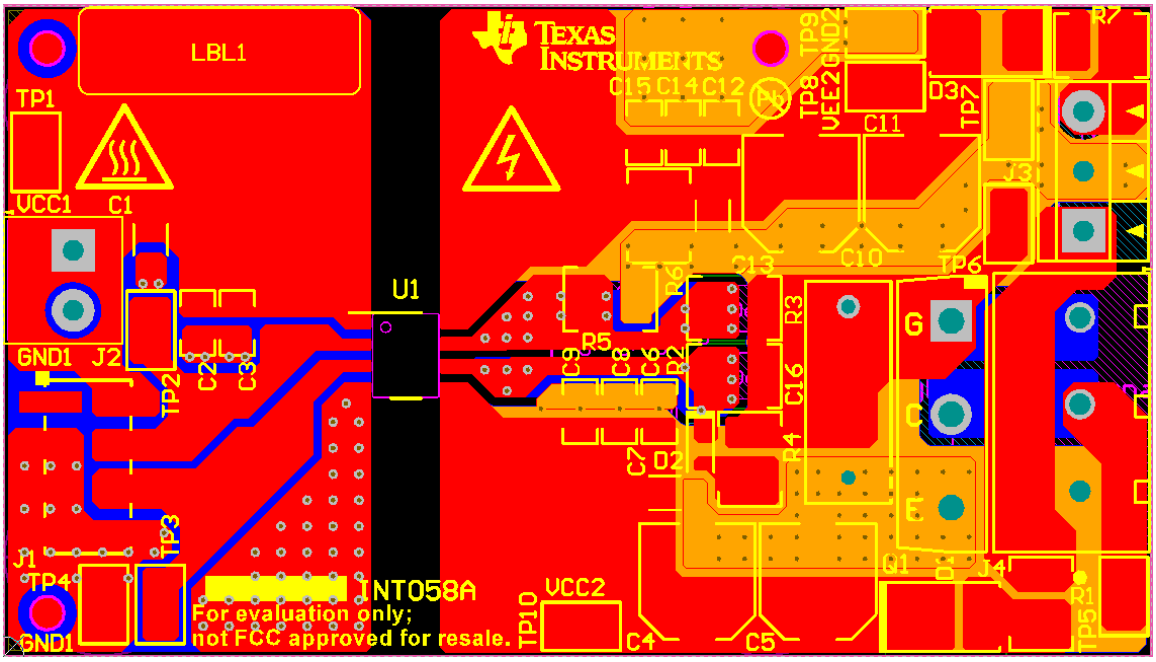

A. No PCB traces or copper are located between the primary and secondary side, which ensures isolation performance.

Figure 11-1. Layout Example

Figure 11-2 and Figure 11-3 show the top and bottom layer traces and copper.

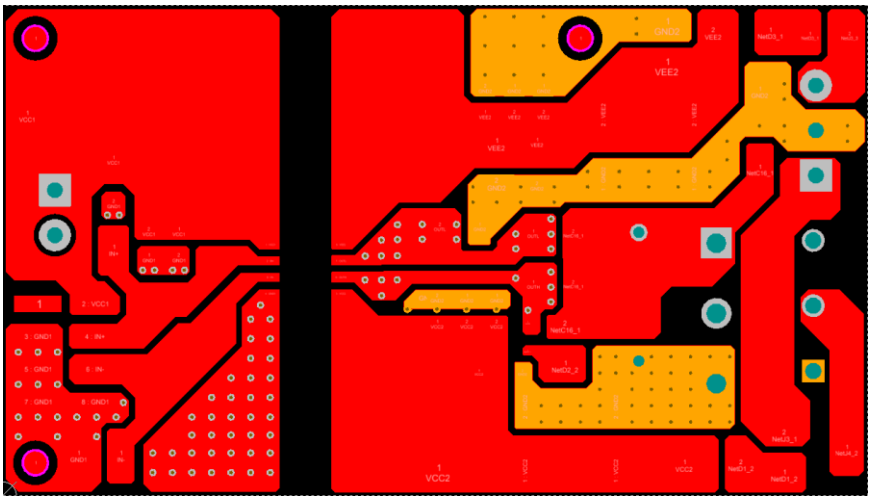

Figure 11-2. Top-Layer Traces and Copper

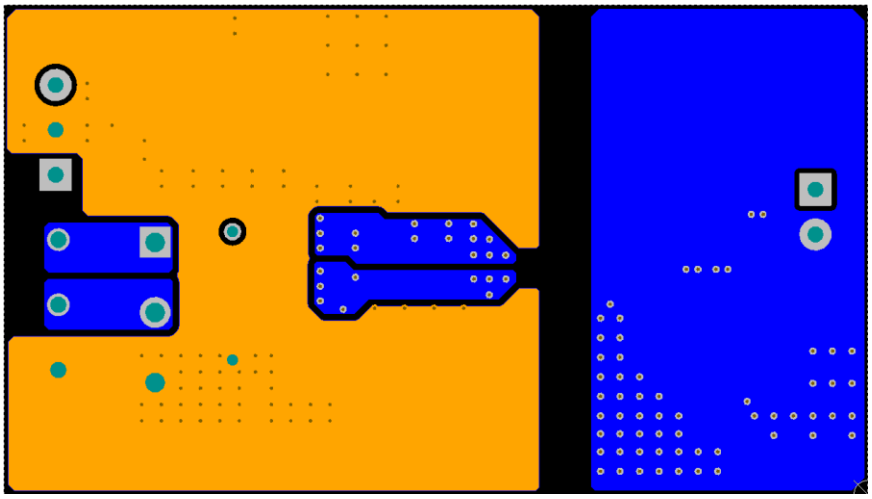

Figure 11-3. Bottom-Layer Traces and Copper (Flipped)

Figure 11-4 shows the 3D layout of the top view of the PCB.

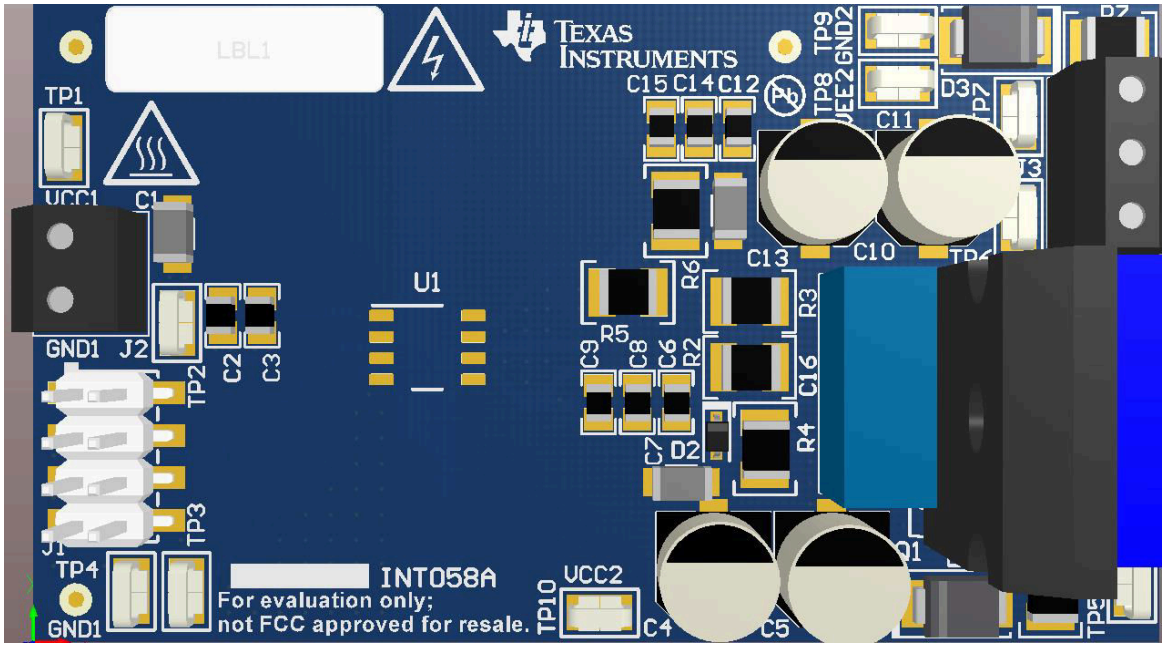

A. The location of the PCB cutout between primary side and secondary sides ensures isolation performance.

Figure 11-4. 3-D PCB View

11.3 PCB Material

Use standard FR-4 UL94V-0 printed circuit board. This PCB is preferred over cheaper alternatives because of lower dielectric losses at high frequencies, less moisture absorption, greater strength and stiffness, and the self-extinguishing flammability-characteristics.

Figure 11-5 shows the recommended layer stack.

Copyright © 2024 Texas Instruments Incorporated

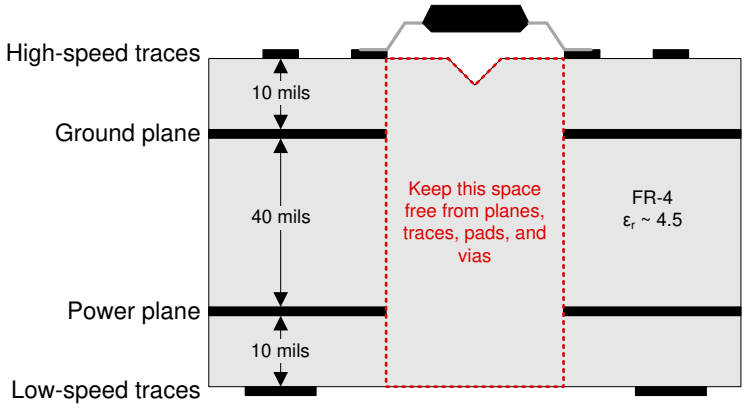

Figure 11-5. Recommended Layer Stack

12 Device and Documentation Support

12.1 Device Support

12.1.1 Third-Party Products Disclaimer

TI'S PUBLICATION OF INFORMATION REGARDING THIRD-PARTY PRODUCTS OR SERVICES DOES NOT CONSTITUTE AN ENDORSEMENT REGARDING THE SUITABILITY OF SUCH PRODUCTS OR SERVICES OR A WARRANTY, REPRESENTATION OR ENDORSEMENT OF SUCH PRODUCTS OR SERVICES, EITHER ALONE OR IN COMBINATION WITH ANY TI PRODUCT OR SERVICE.

12.2 Documentation Support

12.2.1 Related Documentation

For related documentation see the following:

- Texas Instruments, *Digital Isolator Design Guide*
- Texas Instruments, *Isolation Glossary*
- Texas Instruments, *SN6501 Transformer Driver for Isolated Power Supplies* data sheet
- Texas Instruments, *SN6505A Low-Noise 1-A Transformer Drivers for Isolated Power Supplies* data sheet
- Texas Instruments, *UCC5390ECDWV Isolated Gate Driver Evaluation Module* user's guide
- Texas Instruments, *UCC53x0xD Evaluation Module* user's guide

12.3 Certifications

UL Online Certifications Directory, *"FPPT2.E181974 Nonoptical Isolating Devices - Component"* Certificate Number: 20170718-E181974,

12.4 Receiving Notification of Documentation Updates

To receive notification of documentation updates, navigate to the device product folder on ti.com. Click on *Notifications* to register and receive a weekly digest of any product information that has changed. For change details, review the revision history included in any revised document.

12.5 Support Resources

TI E2E™ support forums are an engineer's go-to source for fast, verified answers and design help — straight from the experts. Search existing answers or ask your own question to get the quick design help you need.

Linked content is provided "AS IS" by the respective contributors. They do not constitute TI specifications and do not necessarily reflect TI's views; see TI's Terms of Use.

12.6 Trademarks

TI E2E™ is a trademark of Texas Instruments.
All trademarks are the property of their respective owners.

12.7 Electrostatic Discharge Caution

This integrated circuit can be damaged by ESD. Texas Instruments recommends that all integrated circuits be handled with appropriate precautions. Failure to observe proper handling and installation procedures can cause damage.

ESD damage can range from subtle performance degradation to complete device failure. Precision integrated circuits may be more susceptible to damage because very small parametric changes could cause the device not to meet its published specifications.

12.8 Glossary

TI Glossary	This glossary lists and explains terms, acronyms, and definitions.

13 Revision History

NOTE: Page numbers for previous revisions may differ from page numbers in the current version.

Copyright © 2024 Texas Instruments Incorporated

Changes from Revision I (March 2024) to Revision J (August 2024) **Page**

- Changed Minimum to Typical in heading and changed values from minimum to typical in Device Information table.... 1
- Changed Minimum to Typical in heading and changed values from minimum to typical in Device Comparison table.... 3

Changes from Revision H (February 2024) to Revision I (March 2024) **Page**

- Changed Certification Planned to Certification number: 40047657 in Safety-Related Certifications For DWV Package section.... 10

Changes from Revision G (December 2023) to Revision H (February 2024) **Page**

- Changed CTI and Material Group values in insulation specifications and added table note.... 8

Changes from Revision F (January 2019) to Revision G (December 2023) **Page**

- Added UCC5350MC DWV package.... 3

Changes from Revision E (October 2018) to Revision F (January 2019) **Page**

- Deleted (UCC5390EC) from 2nd bullet. There are now three released wide-body devices.... 1
- Added DIN EN 61010-1 to Safety-Related Certifications.... 1
- Added "(Planned)" throughout Safety-Related Certifications bullets.... 1
- Changed "variants for pinout configuration and drive strength" with switch type information in description.... 1
- Changed creepage and clearance from 9 mm to 8.5 mm in Insulation Specifications and throughout data sheet.... 9
- Added VDE and CQC certification for D package and UL file number for DWV package 10
- Changed test condition for V_{OH} 11
- Changed a minor detail to the UCC53x0M figures.... 28
- Changed typical application circuit for E Version to include capacitors on negative bias 33

Changes from Revision D (May 2018) to Revision E (October 2018) **Page**

- Changed UCC5310 DWV package from Preview to Final.... 3
- Changed UCC5320 DWV package from Preview to Final.... 3

Changes from Revision C (February 2018) to Revision D (May 2018) **Page**

- Changed marketing status of the UCC5390EC from Preview to Production. 1

Changes from Revision B (August 2017) to Revision C (February 2018) **Page**

- Added UCC5350SBD, UCC5320SCDWV, UCC5310MCDWV, and UCC5390ECDWV devices to the datasheet 1
- Changed Features, Applications, Description, and functional block diagram to include E and M version, and DWV package information.... 1

- Added UCC5350SB to the pin configuration and function....4
- Added minimum storage temperature....6
- Changed from VDE V 0884-10 to VDE V 0884-11 in insulation specifications and safety-related certification table....8
- Changed safety limiting values....10
- Deleted test conditions for Supply Currents....11
- Added Typical Curves and Test Conditions to include UCC5390 and UCC5350 information....15
- Deleted device I/O figure....31
- Changed ESD figure....31
- Added UL online certification directory to the certification section....44

Changes from Revision A (June 2017) to Revision B (August 2017)	Page
• Changed minimum ambient operating temperature from –55°C to –40°C	1

Changes from Revision * (June 2017) to Revision A (June 2017)	Page
• Deleted 17 A from title which is available for future 10-A device	1

14 Mechanical, Packaging, and Orderable Information

The following pages include mechanical, packaging, and orderable information. This information is the most current data available for the designated devices. This data is subject to change without notice and revision of this document. For browser-based versions of this data sheet, refer to the left-hand navigation.

Copyright © 2024 Texas Instruments Incorporated

PACKAGING INFORMATION

Orderable part number	Status (1)	Material type (2)	Package | Pins	Package qty | Carrier	RoHS (3)	Lead finish/ Ball material (4)	MSL rating/ Peak reflow (5)	Op temp (°C)	Part marking (6)
UCC5310MCD	Obsolete	Production	SOIC (D) | 8	-	-	Call TI	Call TI	-40 to 125	5310M
UCC5310MCDR	Active	Production	SOIC (D) | 8	2500 | LARGE T&R	Yes	NIPDAU	Level-2-260C-1 YEAR	-40 to 125	5310M
UCC5310MCDR.A	Active	Production	SOIC (D) | 8	2500 | LARGE T&R	Yes	NIPDAU	Level-2-260C-1 YEAR	-40 to 125	5310M
UCC5310MCDR.B	Active	Production	SOIC (D) | 8	2500 | LARGE T&R	Yes	NIPDAU	Level-2-260C-1 YEAR	-40 to 125	5310M
UCC5310MCDWV	Obsolete	Production	SOIC (DWV) | 8	-	-	Call TI	Call TI	-40 to 125	5310MC
UCC5310MCDWVR	Active	Production	SOIC (DWV) | 8	1000 | LARGE T&R	Yes	NIPDAU	Level-2-260C-1 YEAR	-40 to 125	5310MC
UCC5310MCDWVR.A	Active	Production	SOIC (DWV) | 8	1000 | LARGE T&R	Yes	NIPDAU	Level-2-260C-1 YEAR	-40 to 125	5310MC
UCC5310MCDWVR.B	Active	Production	SOIC (DWV) | 8	1000 | LARGE T&R	Yes	NIPDAU	Level-2-260C-1 YEAR	-40 to 125	5310MC
UCC5320ECD	Obsolete	Production	SOIC (D) | 8	-	-	Call TI	Call TI	-40 to 125	5320E
UCC5320ECDR	Active	Production	SOIC (D) | 8	2500 | LARGE T&R	Yes	NIPDAU	Level-2-260C-1 YEAR	-40 to 125	5320E
UCC5320ECDR.A	Active	Production	SOIC (D) | 8	2500 | LARGE T&R	Yes	NIPDAU	Level-2-260C-1 YEAR	-40 to 125	5320E
UCC5320ECDR.B	Active	Production	SOIC (D) | 8	2500 | LARGE T&R	Yes	NIPDAU	Level-2-260C-1 YEAR	-40 to 125	5320E
UCC5320SCD	Obsolete	Production	SOIC (D) | 8	-	-	Call TI	Call TI	-40 to 125	5320S
UCC5320SCDR	Active	Production	SOIC (D) | 8	2500 | LARGE T&R	Yes	NIPDAU	Level-2-260C-1 YEAR	-40 to 125	5320S
UCC5320SCDR.A	Active	Production	SOIC (D) | 8	2500 | LARGE T&R	Yes	NIPDAU	Level-2-260C-1 YEAR	-40 to 125	5320S
UCC5320SCDR.B	Active	Production	SOIC (D) | 8	2500 | LARGE T&R	Yes	NIPDAU	Level-2-260C-1 YEAR	-40 to 125	5320S
UCC5320SCDWV	Obsolete	Production	SOIC (DWV) | 8	-	-	Call TI	Call TI	-40 to 125	5320SC
UCC5320SCDWVR	Active	Production	SOIC (DWV) | 8	1000 | LARGE T&R	Yes	NIPDAU	Level-2-260C-1 YEAR	-40 to 125	5320SC
UCC5320SCDWVR.A	Active	Production	SOIC (DWV) | 8	1000 | LARGE T&R	Yes	NIPDAU	Level-2-260C-1 YEAR	-40 to 125	5320SC
UCC5320SCDWVR.B	Active	Production	SOIC (DWV) | 8	1000 | LARGE T&R	Yes	NIPDAU	Level-2-260C-1 YEAR	-40 to 125	5320SC
UCC5350MCD	Obsolete	Production	SOIC (D) | 8	-	-	Call TI	Call TI	-40 to 125	5350M
UCC5350MCDR	Active	Production	SOIC (D) | 8	2500 | LARGE T&R	Yes	NIPDAU	Level-2-260C-1 YEAR	-40 to 125	5350M
UCC5350MCDR.A	Active	Production	SOIC (D) | 8	2500 | LARGE T&R	Yes	NIPDAU	Level-2-260C-1 YEAR	-40 to 125	5350M
UCC5350MCDR.B	Active	Production	SOIC (D) | 8	2500 | LARGE T&R	Yes	NIPDAU	Level-2-260C-1 YEAR	-40 to 125	5350M
UCC5350MCDWV	Obsolete	Production	SOIC (DWV) | 8	-	-	Call TI	Call TI	-40 to 125	5350MC
UCC5350MCDWVR	Active	Production	SOIC (DWV) | 8	1000 | LARGE T&R	Yes	NIPDAU	Level-2-260C-1 YEAR	-40 to 125	5350MC
UCC5350MCDWVR.A	Active	Production	SOIC (DWV) | 8	1000 | LARGE T&R	Yes	NIPDAU	Level-2-260C-1 YEAR	-40 to 125	5350MC
UCC5350MCDWVR.B	Active	Production	SOIC (DWV) | 8	1000 | LARGE T&R	Yes	NIPDAU	Level-2-260C-1 YEAR	-40 to 125	5350MC
UCC5350SBD	Obsolete	Production	SOIC (D) | 8	-	-	Call TI	Call TI	-40 to 125	5350SB

Orderable part number	Status (1)	Material type (2)	Package | Pins	Package qty | Carrier	RoHS (3)	Lead finish/ Ball material (4)	MSL rating/ Peak reflow (5)	Op temp (°C)	Part marking (6)
UCC5350SBDR	Active	Production	SOIC (D) | 8	2500 | LARGE T&R	Yes	NIPDAU	Level-2-260C-1 YEAR	-40 to 125	5350SB
UCC5350SBDR.A	Active	Production	SOIC (D) | 8	2500 | LARGE T&R	Yes	NIPDAU	Level-2-260C-1 YEAR	-40 to 125	5350SB
UCC5350SBDR.B	Active	Production	SOIC (D) | 8	2500 | LARGE T&R	Yes	NIPDAU	Level-2-260C-1 YEAR	-40 to 125	5350SB
UCC5390ECD	Obsolete	Production	SOIC (D) | 8	-	-	Call TI	Call TI	-40 to 125	53X0E
UCC5390ECDR	Active	Production	SOIC (D) | 8	2500 | LARGE T&R	Yes	NIPDAU	Level-2-260C-1 YEAR	-40 to 125	53X0E
UCC5390ECDR.A	Active	Production	SOIC (D) | 8	2500 | LARGE T&R	Yes	NIPDAU	Level-2-260C-1 YEAR	-40 to 125	53X0E
UCC5390ECDR.B	Active	Production	SOIC (D) | 8	2500 | LARGE T&R	Yes	NIPDAU	Level-2-260C-1 YEAR	-40 to 125	53X0E
UCC5390ECDWV	Obsolete	Production	SOIC (DWV) | 8	-	-	Call TI	Call TI	-40 to 125	5390EC
UCC5390ECDWVR	Active	Production	SOIC (DWV) | 8	1000 | LARGE T&R	Yes	NIPDAU	Level-2-260C-1 YEAR	-40 to 125	5390EC
UCC5390ECDWVR.A	Active	Production	SOIC (DWV) | 8	1000 | LARGE T&R	Yes	NIPDAU	Level-2-260C-1 YEAR	-40 to 125	5390EC
UCC5390ECDWVR.B	Active	Production	SOIC (DWV) | 8	1000 | LARGE T&R	Yes	NIPDAU	Level-2-260C-1 YEAR	-40 to 125	5390EC
UCC5390SCD	Obsolete	Production	SOIC (D) | 8	-	-	Call TI	Call TI	-40 to 125	53X0S
UCC5390SCDR	Active	Production	SOIC (D) | 8	2500 | LARGE T&R	Yes	NIPDAU	Level-2-260C-1 YEAR	-40 to 125	53X0S
UCC5390SCDR.A	Active	Production	SOIC (D) | 8	2500 | LARGE T&R	Yes	NIPDAU	Level-2-260C-1 YEAR	-40 to 125	53X0S
UCC5390SCDR.B	Active	Production	SOIC (D) | 8	2500 | LARGE T&R	Yes	NIPDAU	Level-2-260C-1 YEAR	-40 to 125	53X0S
UCC5390SCDRG4.A	Active	Production	SOIC (D) | 8	2500 | LARGE T&R	Yes	NIPDAU	Level-2-260C-1 YEAR	-40 to 125	53X0S
UCC5390SCDRG4.B	Active	Production	SOIC (D) | 8	2500 | LARGE T&R	Yes	NIPDAU	Level-2-260C-1 YEAR	-40 to 125	53X0S

(1) **Status:** For more details on status, see our product life cycle.

(2) **Material type:** When designated, preproduction parts are prototypes/experimental devices, and are not yet approved or released for full production. Testing and final process, including without limitation quality assurance, reliability performance testing, and/or process qualification, may not yet be complete, and this item is subject to further changes or possible discontinuation. If available for ordering, purchases will be subject to an additional waiver at checkout, and are intended for early internal evaluation purposes only. These items are sold without warranties of any kind.

(3) **RoHS values:** Yes, No, RoHS Exempt. See the TI RoHS Statement for additional information and value definition.

(4) **Lead finish/Ball material:** Parts may have multiple material finish options. Finish options are separated by a vertical ruled line. Lead finish/Ball material values may wrap to two lines if the finish value exceeds the maximum column width.

(5) **MSL rating/Peak reflow:** The moisture sensitivity level ratings and peak solder (reflow) temperatures. In the event that a part has multiple moisture sensitivity ratings, only the lowest level per JEDEC standards is shown. Refer to the shipping label for the actual reflow temperature that will be used to mount the part to the printed circuit board.

(6) **Part marking:** There may be an additional marking, which relates to the logo, the lot trace code information, or the environmental category of the part.

Multiple part markings will be inside parentheses. Only one part marking contained in parentheses and separated by a "~" will appear on a part. If a line is indented then it is a continuation of the previous line and the two combined represent the entire part marking for that device.

Important Information and Disclaimer: The information provided on this page represents TI's knowledge and belief as of the date that it is provided. TI bases its knowledge and belief on information provided by third parties, and makes no representation or warranty as to the accuracy of such information. Efforts are underway to better integrate information from third parties. TI has taken and continues to take reasonable steps to provide representative and accurate information but may not have conducted destructive testing or chemical analysis on incoming materials and chemicals. TI and TI suppliers consider certain information to be proprietary, and thus CAS numbers and other limited information may not be available for release.

In no event shall TI's liability arising out of such information exceed the total purchase price of the TI part(s) at issue in this document sold by TI to Customer on an annual basis.

OTHER QUALIFIED VERSIONS OF UCC5350, UCC5390 :

- Automotive : UCC5350-Q1, UCC5390-Q1

NOTE: Qualified Version Definitions:

- Automotive - Q100 devices qualified for high-reliability automotive applications targeting zero defects

TAPE AND REEL INFORMATION

REEL DIMENSIONS

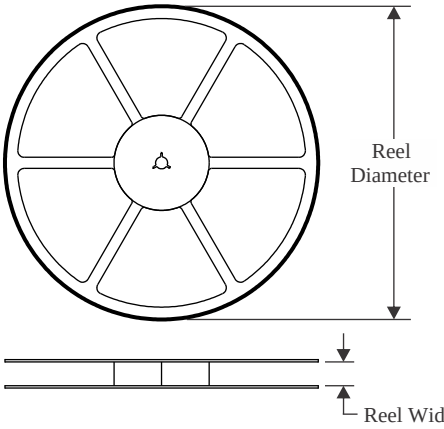

TAPE DIMENSIONS

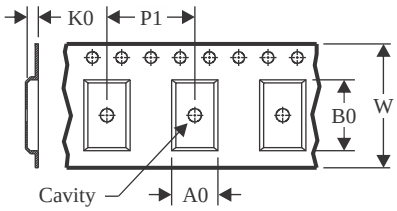

A0	Dimension designed to accommodate the component width
B0	Dimension designed to accommodate the component length
K0	Dimension designed to accommodate the component thickness
W	Overall width of the carrier tape
P1	Pitch between successive cavity centers

QUADRANT ASSIGNMENTS FOR PIN 1 ORIENTATION IN TAPE

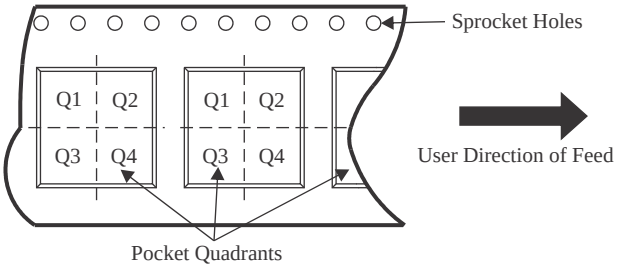

*All dimensions are nominal

Device	Package Type	Package Drawing	Pins	SPQ	Reel Diameter (mm)	Reel Width W1 (mm)	A0 (mm)	B0 (mm)	K0 (mm)	P1 (mm)	W (mm)	Pin1 Quadrant
UCC5310MCDR	SOIC	D	8	2500	330.0	12.4	6.4	5.2	2.1	8.0	12.0	Q1
UCC5310MCDR	SOIC	D	8	2500	330.0	12.4	6.4	5.2	2.1	8.0	12.0	Q1
UCC5310MCDWVR	SOIC	DWV	8	1000	330.0	16.4	12.05	6.15	3.3	16.0	16.0	Q1
UCC5320ECDR	SOIC	D	8	2500	330.0	12.4	6.4	5.2	2.1	8.0	12.0	Q1
UCC5320SCDR	SOIC	D	8	2500	330.0	12.4	6.4	5.2	2.1	8.0	12.0	Q1
UCC5320SCDWVR	SOIC	DWV	8	1000	330.0	16.4	12.05	6.15	3.3	16.0	16.0	Q1
UCC5350MCDR	SOIC	D	8	2500	330.0	12.4	6.4	5.2	2.1	8.0	12.0	Q1
UCC5350MCDWVR	SOIC	DWV	8	1000	330.0	16.4	12.05	6.15	3.3	16.0	16.0	Q1
UCC5390ECDR	SOIC	D	8	2500	330.0	12.4	6.4	5.2	2.1	8.0	12.0	Q1
UCC5390ECDWVR	SOIC	DWV	8	1000	330.0	16.4	12.05	6.15	3.3	16.0	16.0	Q1
UCC5390SCDR	SOIC	D	8	2500	330.0	12.4	6.4	5.2	2.1	8.0	12.0	Q1

TAPE AND REEL BOX DIMENSIONS

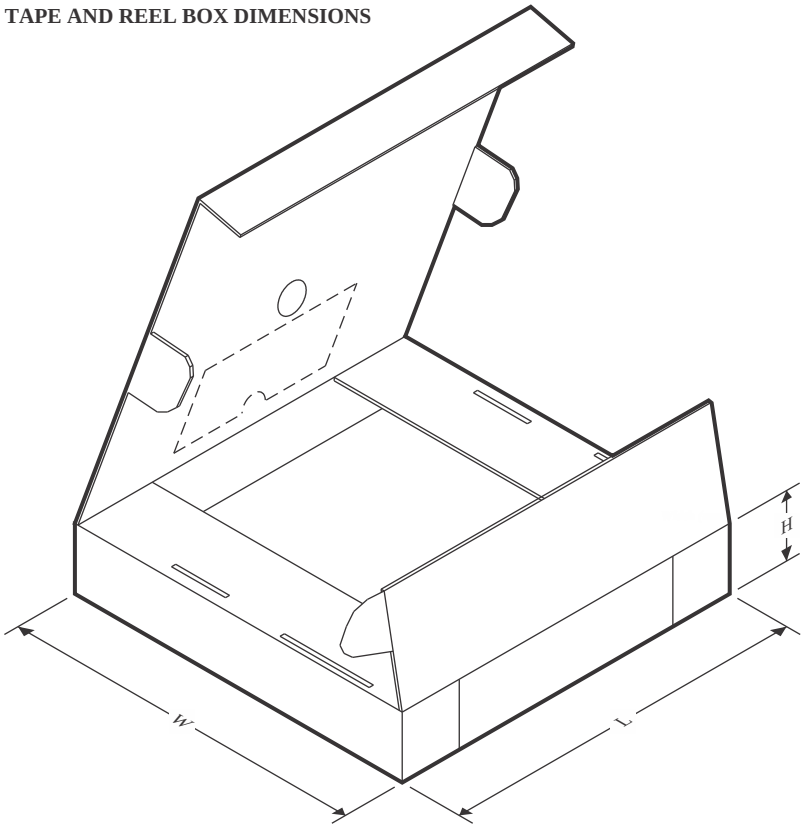

*All dimensions are nominal

Device	Package Type	Package Drawing	Pins	SPQ	Length (mm)	Width (mm)	Height (mm)
UCC5310MCDR	SOIC	D	8	2500	353.0	353.0	32.0
UCC5310MCDR	SOIC	D	8	2500	350.0	350.0	43.0
UCC5310MCDWVR	SOIC	DWV	8	1000	350.0	350.0	43.0
UCC5320ECDR	SOIC	D	8	2500	350.0	350.0	43.0
UCC5320SCDR	SOIC	D	8	2500	350.0	350.0	43.0
UCC5320SCDWVR	SOIC	DWV	8	1000	350.0	350.0	43.0
UCC5350MCDR	SOIC	D	8	2500	356.0	356.0	35.0
UCC5350MCDWVR	SOIC	DWV	8	1000	350.0	350.0	43.0
UCC5390ECDR	SOIC	D	8	2500	350.0	350.0	43.0
UCC5390ECDWVR	SOIC	DWV	8	1000	350.0	350.0	43.0
UCC5390SCDR	SOIC	D	8	2500	350.0	350.0	43.0

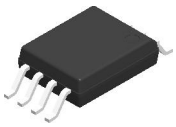

DWV0008A

SOIC - 2.8 mm max height

SOIC

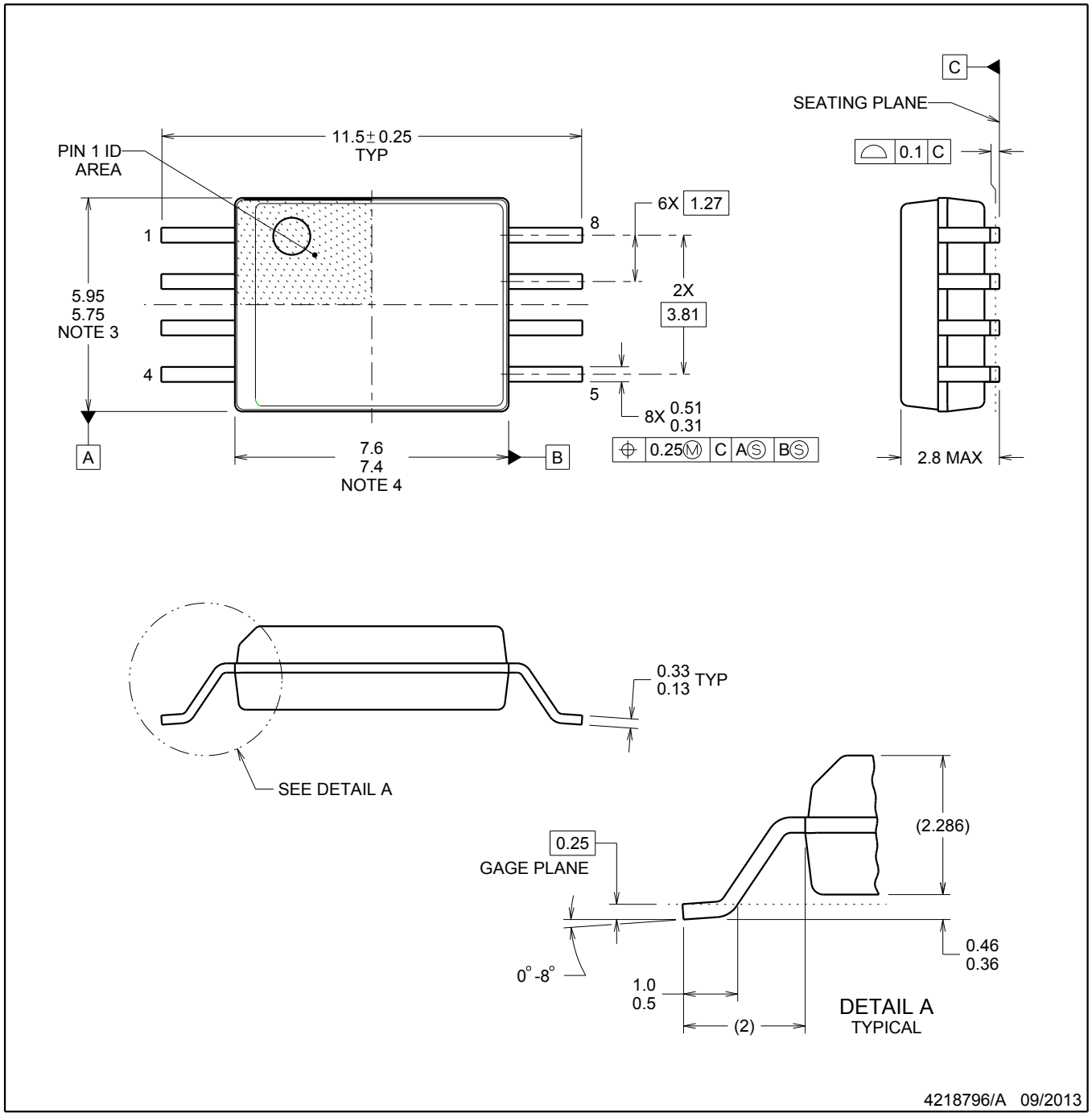

NOTES:

1. All linear dimensions are in millimeters. Dimensions in parenthesis are for reference only. Dimensioning and tolerancing per ASME Y14.5M.
2. This drawing is subject to change without notice.
3. This dimension does not include mold flash, protrusions, or gate burrs. Mold flash, protrusions, or gate burrs shall not exceed 0.15 mm, per side.
4. This dimension does not include interlead flash. Interlead flash shall not exceed 0.25 mm, per side.

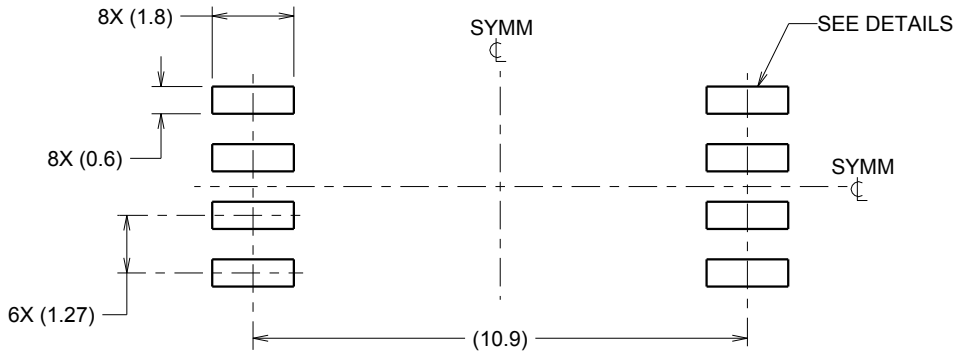

LAND PATTERN EXAMPLE
9.1 mm NOMINAL CLEARANCE/CREEPAGE
SCALE:6X

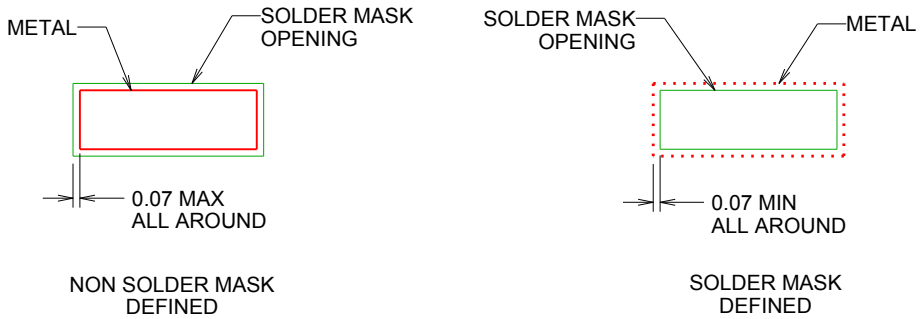

SOLDER MASK DETAILS

4218796/A 09/2013

NOTES: (continued)

5. Publication IPC-7351 may have alternate designs.
6. Solder mask tolerances between and around signal pads can vary based on board fabrication site.

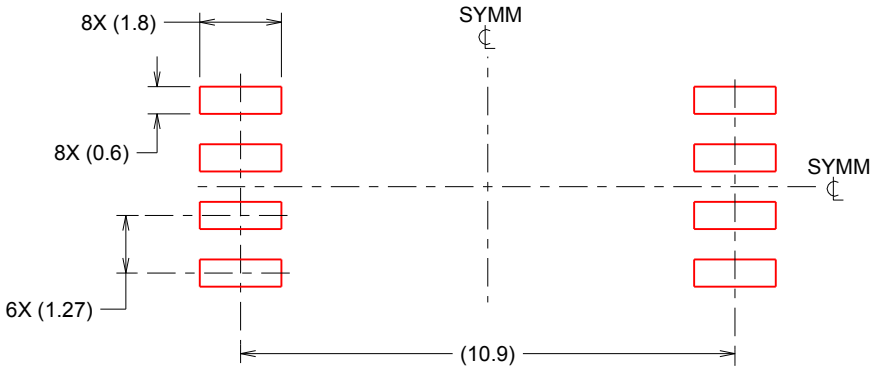

SOLDER PASTE EXAMPLE
BASED ON 0.125 mm THICK STENCIL
SCALE:6X

4218796/A 09/2013

NOTES: (continued)

7. Laser cutting apertures with trapezoidal walls and rounded corners may offer better paste release. IPC-7525 may have alternate design recommendations.
8. Board assembly site may have different recommendations for stencil design.

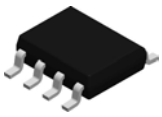

PACKAGE OUTLINE

D0008A

SOIC - 1.75 mm max height

SMALL OUTLINE INTEGRATED CIRCUIT

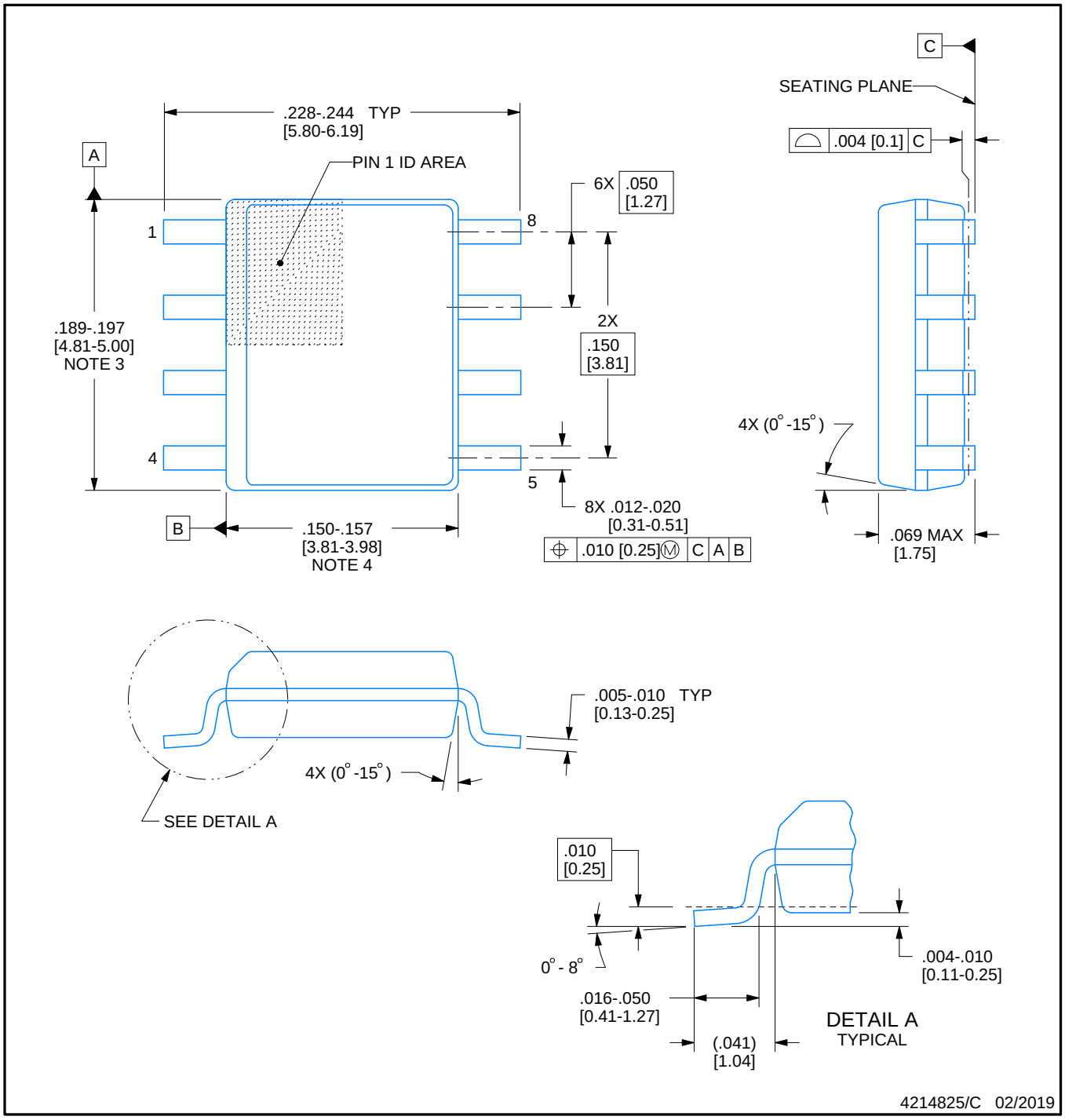

NOTES:

1. Linear dimensions are in inches [millimeters]. Dimensions in parenthesis are for reference only. Controlling dimensions are in inches. Dimensioning and tolerancing per ASME Y14.5M.
2. This drawing is subject to change without notice.
3. This dimension does not include mold flash, protrusions, or gate burrs. Mold flash, protrusions, or gate burrs shall not exceed .006 [0.15] per side.
4. This dimension does not include interlead flash.
5. Reference JEDEC registration MS-012, variation AA.

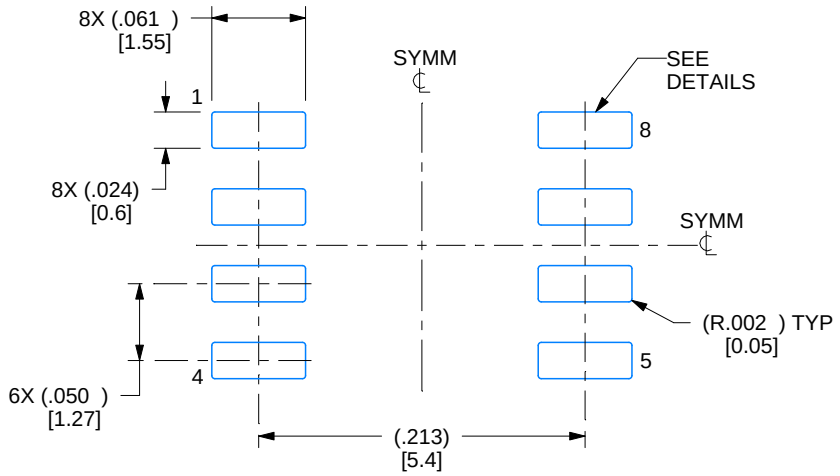

LAND PATTERN EXAMPLE
EXPOSED METAL SHOWN
SCALE:8X

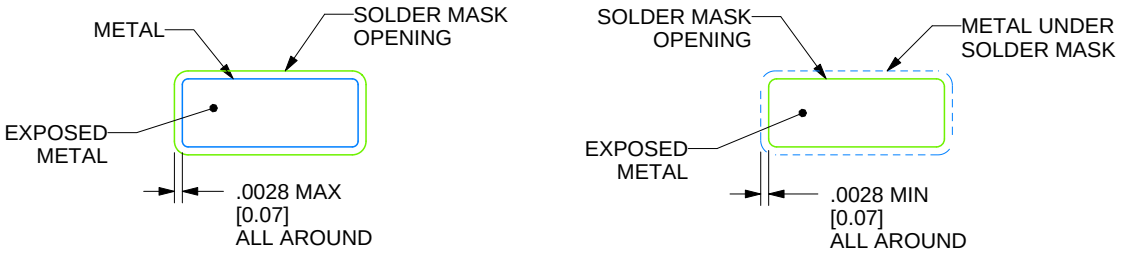

SOLDER MASK DETAILS

4214825/C 02/2019

NOTES: (continued)

6. Publication IPC-7351 may have alternate designs.
7. Solder mask tolerances between and around signal pads can vary based on board fabrication site.

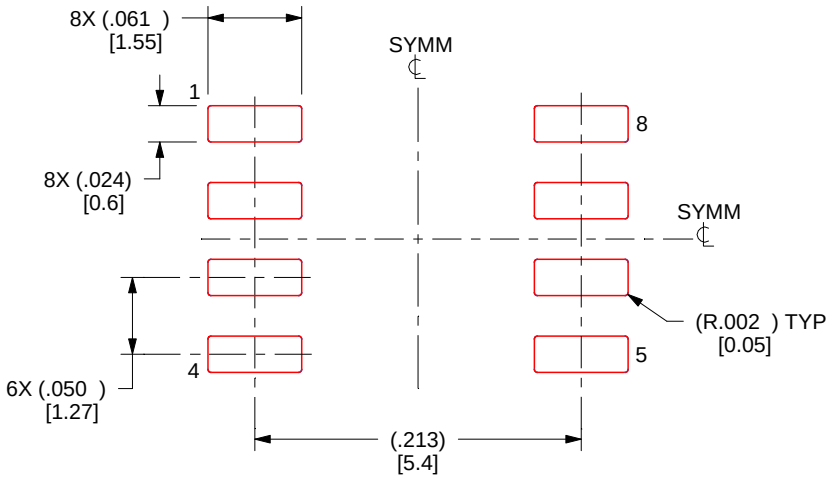

SOLDER PASTE EXAMPLE
BASED ON .005 INCH [0.125 MM] THICK STENCIL
SCALE:8X

4214825/C 02/2019

NOTES: (continued)

8. Laser cutting apertures with trapezoidal walls and rounded corners may offer better paste release. IPC-7525 may have alternate design recommendations.
9. Board assembly site may have different recommendations for stencil design.

IMPORTANT NOTICE AND DISCLAIMER

TI PROVIDES TECHNICAL AND RELIABILITY DATA (INCLUDING DATA SHEETS), DESIGN RESOURCES (INCLUDING REFERENCE DESIGNS), APPLICATION OR OTHER DESIGN ADVICE, WEB TOOLS, SAFETY INFORMATION, AND OTHER RESOURCES “AS IS” AND WITH ALL FAULTS, AND DISCLAIMS ALL WARRANTIES, EXPRESS AND IMPLIED, INCLUDING WITHOUT LIMITATION ANY IMPLIED WARRANTIES OF MERCHANTABILITY, FITNESS FOR A PARTICULAR PURPOSE OR NON-INFRINGEMENT OF THIRD PARTY INTELLECTUAL PROPERTY RIGHTS.

These resources are intended for skilled developers designing with TI products. You are solely responsible for (1) selecting the appropriate TI products for your application, (2) designing, validating and testing your application, and (3) ensuring your application meets applicable standards, and any other safety, security, regulatory or other requirements.

These resources are subject to change without notice. TI grants you permission to use these resources only for development of an application that uses the TI products described in the resource. Other reproduction and display of these resources is prohibited. No license is granted to any other TI intellectual property right or to any third party intellectual property right. TI disclaims responsibility for, and you will fully indemnify TI and its representatives against, any claims, damages, costs, losses, and liabilities arising out of your use of these resources.

TI’s products are provided subject to TI’s Terms of Sale or other applicable terms available either on ti.com or provided in conjunction with such TI products. TI’s provision of these resources does not expand or otherwise alter TI’s applicable warranties or warranty disclaimers for TI products.

TI objects to and rejects any additional or different terms you may have proposed.

Mailing Address: Texas Instruments, Post Office Box 655303, Dallas, Texas 75265
Copyright © 2025, Texas Instruments Incorporated