- **State-of-the-Art *EPIC*-II*B*™ BiCMOS Design Significantly Reduces Power Dissipation**
- **Latch-Up Performance Exceeds 500 mA Per JEDEC Standard JESD-17**
- **Typical V_{OLP} (Output Ground Bounce) < 1 V at V_{CC} = 5 V, T_A = 25°C**
- **High-Drive Outputs (–32-mA I_{OH}, 64-mA I_{OL})**
- **ESD Protection Exceeds 2000 V Per MIL-STD-883, Method 3015; Exceeds 200 V Using Machine Model (C = 200 pF, R = 0)**
- **Package Options Include Plastic Small-Outline (DW), Shrink Small-Outline (DB), and Thin Shrink Small-Outline (PW) Packages, Ceramic Chip Carriers (FK), Plastic (N) and Ceramic (J) DIPs, and Ceramic Flat (W) Package**

SN54ABT377 . . . J OR W PACKAGE
SN74ABT377A . . . DB, DW, N, OR PW PACKAGE
(TOP VIEW)

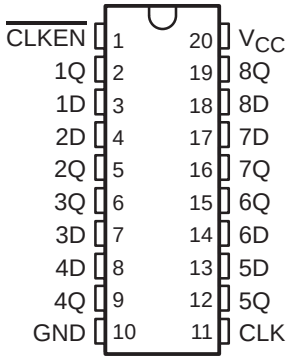

SN54ABT377 . . . FK PACKAGE
(TOP VIEW)

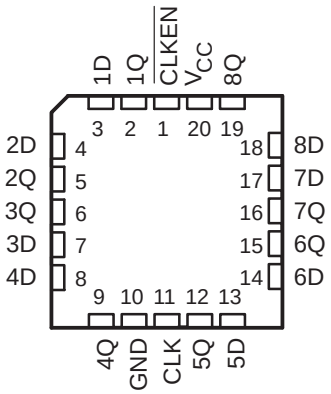

description

These 8-bit positive-edge-triggered D-type flip-flops with a clock (CLK) input are particularly suitable for implementing buffer and storage registers, shift registers, and pattern generators.

Data (D) input information that meets the setup time requirements is transferred to the Q outputs on the positive-going edge of the clock pulse if the common clock-enable ($\overline{CLKEN}$) input is low. Clock triggering occurs at a particular voltage level and is not directly related to the transition time of the positive-going pulse. When the buffered clock (CLK) input is at either the high or low level, the D-input signal has no effect at the output. The circuits are designed to prevent false clocking by transitions at $\overline{CLKEN}$.

The SN54ABT377 is characterized for operation over the full military temperature range of –55°C to 125°C. The SN74ABT377A is characterized for operation from –40°C to 85°C.

FUNCTION TABLE
(each flip-flop)

INPUTS			OUTPUT
$\overline{CLKEN}$	CLK	D	Q
H	X	X	Q_0
L	↑	H	H
L	↑	L	L
X	H or L	X	Q_0

Please be aware that an important notice concerning availability, standard warranty, and use in critical applications of Texas Instruments semiconductor products and disclaimers thereto appears at the end of this data sheet.

EPIC-IIB is a trademark of Texas Instruments Incorporated.

PRODUCTION DATA information is current as of publication date. Products conform to specifications per the terms of Texas Instruments standard warranty. Production processing does not necessarily include testing of all parameters.

Copyright © 1997, Texas Instruments Incorporated

logic symbol†

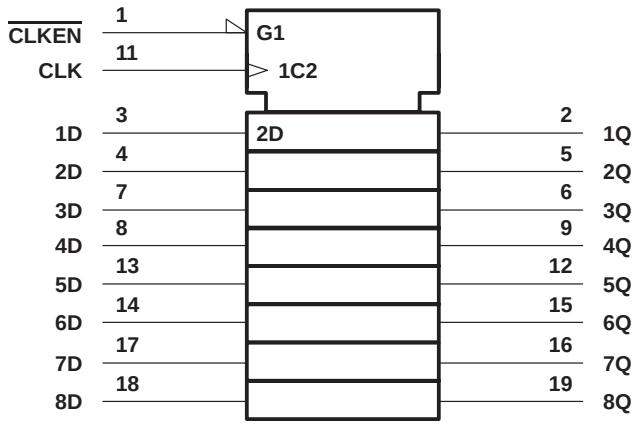

† This symbol is in accordance with ANSI/IEEE Std 91-1984 and IEC Publication 617-12.

logic diagram (positive logic)

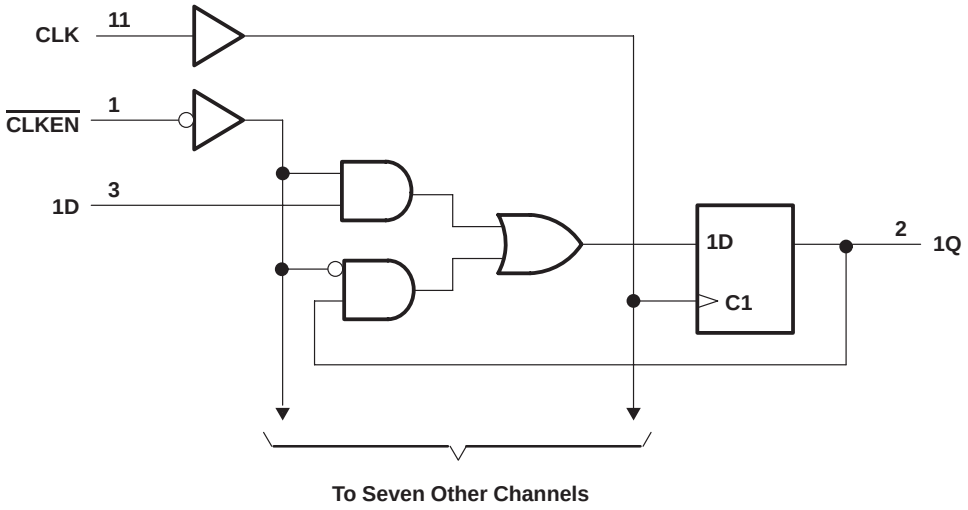

absolute maximum ratings over operating free-air temperature range (unless otherwise noted)†

Supply voltage range, V_{CC} . . . . . –0.5 V to 7 V
Input voltage range, V_I (see Note 1) . . . . . –0.5 V to 7 V
Voltage range applied to any output in the high or power-off state, V_O . . . . . –0.5 V to 5.5 V
Current into any output in the low state, I_O: SN54ABT377 . . . . . 96 mA
SN74ABT377A . . . . . 128 mA
Input clamp current, I_{IK} (V_I < 0) . . . . . –18 mA
Output clamp current, I_{OK} (V_O < 0) . . . . . –50 mA
Package thermal impedance, θ_{JA} (see Note 2): DB package . . . . . 115°C/W
DW package . . . . . 97°C/W
N package . . . . . 67°C/W
PW package . . . . . 128°C/W
Storage temperature range, T_{stg} . . . . . –65°C to 150°C

† Stresses beyond those listed under “absolute maximum ratings” may cause permanent damage to the device. These are stress ratings only, and functional operation of the device at these or any other conditions beyond those indicated under “recommended operating conditions” is not implied. Exposure to absolute-maximum-rated conditions for extended periods may affect device reliability.

NOTES: 1. The input and output negative-voltage ratings may be exceeded if the input and output clamp-current ratings are observed.
2. The package thermal impedance is calculated in accordance with EIA/JEDEC Std JESD51, except for through-hole packages, which use a trace length of zero.

recommended operating conditions (see Note 3)

			SN54ABT377		SN74ABT377A		UNIT
			MIN	MAX	MIN	MAX	
V_{CC}	Supply voltage		4.5	5.5	4.5	5.5	V
V_{IH}	High-level input voltage		2		2		V
V_{IL}	Low-level input voltage			0.8		0.8	V
V_I	Input voltage		0	V_{CC}	0	V_{CC}	V
I_{OH}	High-level output current			–24		–32	mA
I_{OL}	Low-level output current			48		64	mA
$\Delta t/\Delta v$	Input transition rise or fall rate	Outputs enabled		5		5	ns/V
T_A	Operating free-air temperature		–55	125	–40	85	°C

NOTE 3: Unused inputs must be held high or low to prevent them from floating.

electrical characteristics over recommended operating free-air temperature range (unless otherwise noted)

PARAMETER	TEST CONDITIONS			T_A = 25°C			SN54ABT377		SN74ABT377A		UNIT
				MIN	TYP†	MAX	MIN	MAX	MIN	MAX	
V_{IK}	V_{CC} = 4.5 V,	I_I = –18 mA				–1.2		–1.2		–1.2	V
V_{OH}	V_{CC} = 4.5 V,	I_{OH} = –3 mA		2.5			2.5		2.5		V
	V_{CC} = 5 V,	I_{OH} = –3 mA		3			3		3		
	V_{CC} = 4.5 V	I_{OH} = –24 mA		2			2				
		I_{OH} = –32 mA		2*					2		
V_{OL}	V_{CC} = 4.5 V	I_{OL} = 48 mA				0.55		0.55			V
		I_{OL} = 64 mA				0.55*				0.55	
V_{hys}					100						mV
I_I	V_{CC} = 5.5 V,	V_I = V_{CC} or GND				±1		±1		±1	µA
I_{off}	V_{CC} = 0,	V_I or V_O ≤ 4.5 V				±100				±100	µA
I_{CEX}	V_{CC} = 5.5 V,	V_O = 5.5 V	Outputs high			50		50		50	µA
I_O‡	V_{CC} = 5.5 V,	V_O = 2.5 V		–50	–100	–180	–50	–180	–50	–180	mA
I_{CC}	V_{CC} = 5.5 V, I_O = 0, V_I = V_{CC} or GND		Outputs high		1	250		250		250	µA
			Outputs low		24	30		30		30	mA
ΔI_{CC}§	V_{CC} = 5.5 V, One input at 3.4 V, Other inputs at V_{CC} or GND					1.5		1.5		1.5	mA
C_i	V_I = 2.5 V or 0.5 V				3.5						pF

* On products compliant to MIL-PRF-38535, this parameter does not apply.
† All typical values are at V_{CC} = 5 V.
‡ Not more than one output should be tested at a time, and the duration of the test should not exceed one second.
§ This is the increase in supply current for each input that is at the specified TTL voltage level rather than V_{CC} or GND.

timing requirements over recommended ranges of supply voltage and operating free-air temperature (unless otherwise noted) (see Figure 1)

			SN54ABT377				UNIT
			V_{CC} = 5 V, T_A = 25°C		MIN	MAX	
			MIN	MAX			
f_{clock}	Clock frequency		0	150	0	150	MHz
t_w	Pulse duration	CLK high or low	3.3		3.3		ns
t_{su}	Setup time before CLK↑	Data high or low	2		2.5		ns
		$\overline{\text{CLKEN}}$ high or low	3		3		
t_h	Hold time after CLK↑	Data high or low	1.8¶		1.8¶		ns
		$\overline{\text{CLKEN}}$ high or low	1.8¶		1.8¶		

¶ This data sheet limit may vary among suppliers.

timing requirements over recommended ranges of supply voltage and operating free-air temperature (unless otherwise noted) (see Figure 1)

			SN74ABT377A				UNIT
			V_{CC} = 5 V, T_A = 25°C		MIN	MAX	
			MIN	MAX			
f_{clock}	Clock frequency		0	150	0	150	MHz
t_w	Pulse duration	CLK high or low	3.3		3.3		ns
t_{su}	Setup time before CLK↑	Data high or low	2		2.5		ns
		$\overline{\text{CLKEN}}$ high or low	3		3		
t_h	Hold time after CLK↑	Data high or low	1.8†		1.8†		ns
		$\overline{\text{CLKEN}}$ high or low	1.2†		1.2†		

† This data sheet limit may vary among suppliers.

switching characteristics over recommended ranges of supply voltage and operating free-air temperature, C_L = 50 pF (unless otherwise noted) (see Figure 1)

PARAMETER	FROM (INPUT)	TO (OUTPUT)	SN54ABT377					UNIT
			V_{CC} = 5 V, T_A = 25°C			MIN	MAX	
			MIN	TYP	MAX			
f_{max}			150			150		MHz
t_{PLH}	CLK	Q	2.2	4.5	6	2.2	7	ns
t_{PHL}			3.1	5.3	6.8	2	7.6	

switching characteristics over recommended ranges of supply voltage and operating free-air temperature, C_L = 50 pF (unless otherwise noted) (see Figure 1)

PARAMETER	FROM (INPUT)	TO (OUTPUT)	SN74ABT377A					UNIT
			V_{CC} = 5 V, T_A = 25°C			MIN	MAX	
			MIN	TYP	MAX			
f_{max}			150			150		MHz
t_{PLH}	CLK	Q	2.2	4.5	6	2.2	6.5	ns
t_{PHL}			2.6†	5.3	6.8	2.6†	7.3	

† This data sheet limit may vary among suppliers.

PARAMETER MEASUREMENT INFORMATION

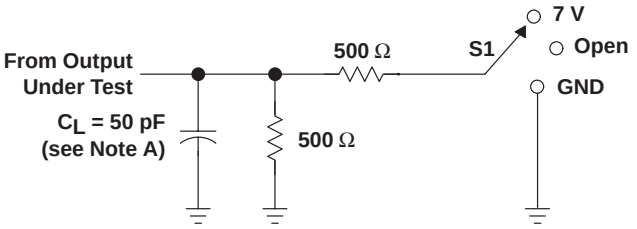

LOAD CIRCUIT

TEST	S1
t_{PLH}/t_{PHL}	Open
t_{PLZ}/t_{PZL}	7 V
t_{PHZ}/t_{PZH}	Open

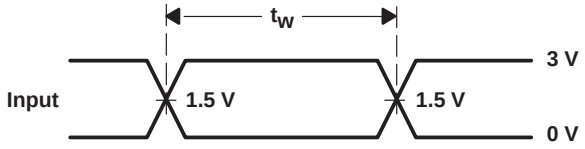

VOLTAGE WAVEFORMS
PULSE DURATION

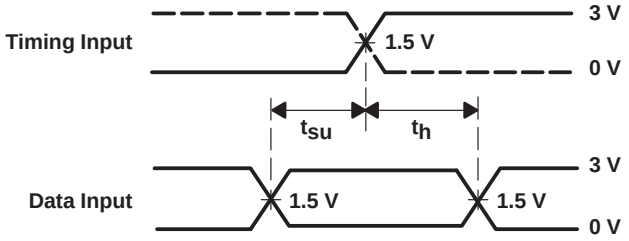

VOLTAGE WAVEFORMS
SETUP AND HOLD TIMES

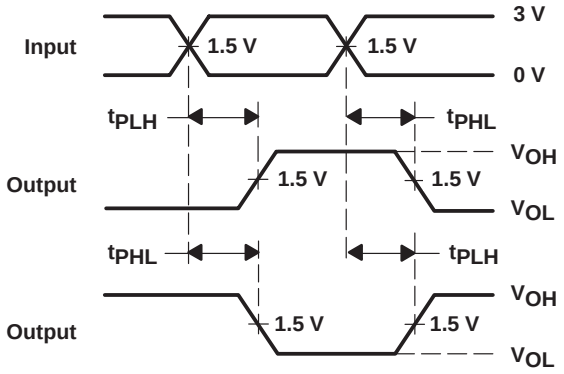

VOLTAGE WAVEFORMS
PROPAGATION DELAY TIMES
INVERTING AND NONINVERTING OUTPUTS

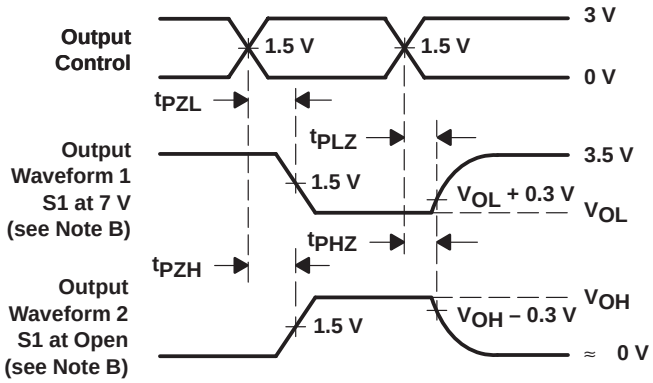

VOLTAGE WAVEFORMS
ENABLE AND DISABLE TIMES
LOW- AND HIGH-LEVEL ENABLING

NOTES: A. C_L includes probe and jig capacitance.
B. Waveform 1 is for an output with internal conditions such that the output is low except when disabled by the output control. Waveform 2 is for an output with internal conditions such that the output is high except when disabled by the output control.
C. All input pulses are supplied by generators having the following characteristics: PRR ≤ 10 MHz, Z_O = 50 Ω, t_r ≤ 2.5 ns, t_f ≤ 2.5 ns.
D. The outputs are measured one at a time with one transition per measurement.

Figure 1. Load Circuit and Voltage Waveforms

PACKAGING INFORMATION

Orderable part number	Status (1)	Material type (2)	Package | Pins	Package qty | Carrier	RoHS (3)	Lead finish/ Ball material (4)	MSL rating/ Peak reflow (5)	Op temp (°C)	Part marking (6)
5962-9314801Q2A	Active	Production	LCCC (FK) | 20	55 | TUBE	No	SNPB	N/A for Pkg Type	-55 to 125	5962-9314801Q2A SNJ54ABT 377FK
5962-9314801QRA	Active	Production	CDIP (J) | 20	20 | TUBE	No	SNPB	N/A for Pkg Type	-55 to 125	5962-9314801QRA SNJ54ABT377J
SN74ABT377ADBR	Active	Production	SSOP (DB) | 20	2000 | LARGE T&R	Yes	NIPDAU	Level-1-260C-UNLIM	-40 to 85	AB377A
SN74ABT377ADBR.B	Active	Production	SSOP (DB) | 20	2000 | LARGE T&R	Yes	NIPDAU	Level-1-260C-UNLIM	-40 to 85	AB377A
SN74ABT377ADW	Active	Production	SOIC (DW) | 20	25 | TUBE	Yes	NIPDAU	Level-1-260C-UNLIM	-40 to 85	ABT377A
SN74ABT377ADW.B	Active	Production	SOIC (DW) | 20	25 | TUBE	Yes	NIPDAU	Level-1-260C-UNLIM	-40 to 85	ABT377A
SN74ABT377ADWE4	Active	Production	SOIC (DW) | 20	25 | TUBE	Yes	NIPDAU	Level-1-260C-UNLIM	-40 to 85	ABT377A
SN74ABT377ADWR	Active	Production	SOIC (DW) | 20	2000 | LARGE T&R	Yes	NIPDAU	Level-1-260C-UNLIM	-40 to 85	ABT377A
SN74ABT377ADWR.B	Active	Production	SOIC (DW) | 20	2000 | LARGE T&R	Yes	NIPDAU	Level-1-260C-UNLIM	-40 to 85	ABT377A
SN74ABT377AN	Active	Production	PDIP (N) | 20	20 | TUBE	Yes	NIPDAU	N/A for Pkg Type	-40 to 85	SN74ABT377AN
SN74ABT377AN.B	Active	Production	PDIP (N) | 20	20 | TUBE	Yes	NIPDAU	N/A for Pkg Type	-40 to 85	SN74ABT377AN
SN74ABT377ANSR	Active	Production	SOP (NS) | 20	2000 | LARGE T&R	Yes	NIPDAU	Level-1-260C-UNLIM	-40 to 85	ABT377A
SN74ABT377ANSR.B	Active	Production	SOP (NS) | 20	2000 | LARGE T&R	Yes	NIPDAU	Level-1-260C-UNLIM	-40 to 85	ABT377A
SN74ABT377APW	Active	Production	TSSOP (PW) | 20	70 | TUBE	Yes	NIPDAU	Level-1-260C-UNLIM	-40 to 85	AB377A
SN74ABT377APW.B	Active	Production	TSSOP (PW) | 20	70 | TUBE	Yes	NIPDAU	Level-1-260C-UNLIM	-40 to 85	AB377A
SN74ABT377APWR	Active	Production	TSSOP (PW) | 20	2000 | LARGE T&R	Yes	NIPDAU	Level-1-260C-UNLIM	-40 to 85	AB377A
SN74ABT377APWR.B	Active	Production	TSSOP (PW) | 20	2000 | LARGE T&R	Yes	NIPDAU	Level-1-260C-UNLIM	-40 to 85	AB377A
SNJ54ABT377FK	Active	Production	LCCC (FK) | 20	55 | TUBE	No	SNPB	N/A for Pkg Type	-55 to 125	5962-9314801Q2A SNJ54ABT 377FK
SNJ54ABT377J	Active	Production	CDIP (J) | 20	20 | TUBE	No	SNPB	N/A for Pkg Type	-55 to 125	5962-9314801QRA SNJ54ABT377J

(1) **Status:** For more details on status, see our product life cycle.

(2) **Material type:** When designated, preproduction parts are prototypes/experimental devices, and are not yet approved or released for full production. Testing and final process, including without limitation quality assurance, reliability performance testing, and/or process qualification, may not yet be complete, and this item is subject to further changes or possible discontinuation. If available for ordering, purchases will be subject to an additional waiver at checkout, and are intended for early internal evaluation purposes only. These items are sold without warranties of any kind.

(3) **RoHS values:** Yes, No, RoHS Exempt. See the TI RoHS Statement for additional information and value definition.

(4) **Lead finish/Ball material:** Parts may have multiple material finish options. Finish options are separated by a vertical ruled line. Lead finish/Ball material values may wrap to two lines if the finish value exceeds the maximum column width.

(5) **MSL rating/Peak reflow:** The moisture sensitivity level ratings and peak solder (reflow) temperatures. In the event that a part has multiple moisture sensitivity ratings, only the lowest level per JEDEC standards is shown. Refer to the shipping label for the actual reflow temperature that will be used to mount the part to the printed circuit board.

(6) **Part marking:** There may be an additional marking, which relates to the logo, the lot trace code information, or the environmental category of the part.

Multiple part markings will be inside parentheses. Only one part marking contained in parentheses and separated by a "~" will appear on a part. If a line is indented then it is a continuation of the previous line and the two combined represent the entire part marking for that device.

Important Information and Disclaimer: The information provided on this page represents TI's knowledge and belief as of the date that it is provided. TI bases its knowledge and belief on information provided by third parties, and makes no representation or warranty as to the accuracy of such information. Efforts are underway to better integrate information from third parties. TI has taken and continues to take reasonable steps to provide representative and accurate information but may not have conducted destructive testing or chemical analysis on incoming materials and chemicals. TI and TI suppliers consider certain information to be proprietary, and thus CAS numbers and other limited information may not be available for release.

In no event shall TI's liability arising out of such information exceed the total purchase price of the TI part(s) at issue in this document sold by TI to Customer on an annual basis.

TAPE AND REEL INFORMATION

REEL DIMENSIONS

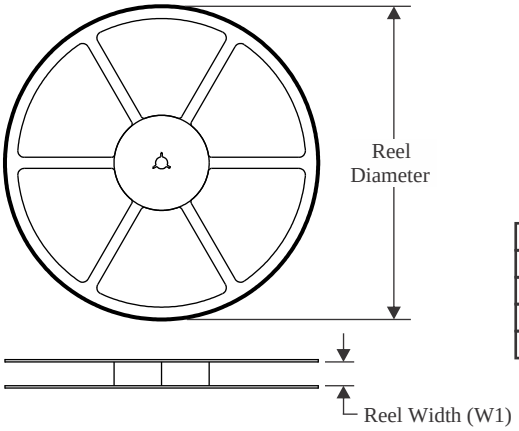

TAPE DIMENSIONS

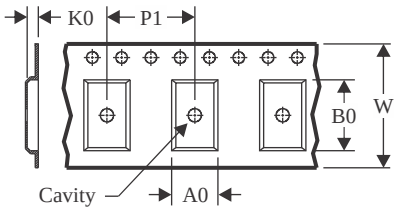

A0	Dimension designed to accommodate the component width
B0	Dimension designed to accommodate the component length
K0	Dimension designed to accommodate the component thickness
W	Overall width of the carrier tape
P1	Pitch between successive cavity centers

QUADRANT ASSIGNMENTS FOR PIN 1 ORIENTATION IN TAPE

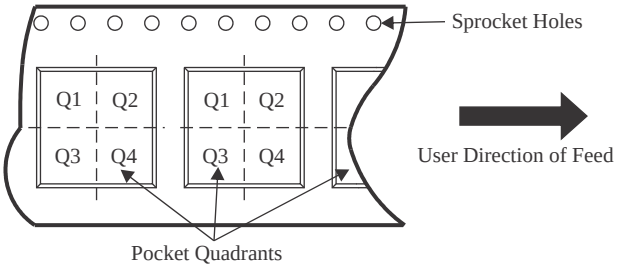

*All dimensions are nominal

Device	Package Type	Package Drawing	Pins	SPQ	Reel Diameter (mm)	Reel Width W1 (mm)	A0 (mm)	B0 (mm)	K0 (mm)	P1 (mm)	W (mm)	Pin1 Quadrant
SN74ABT377ADBR	SSOP	DB	20	2000	330.0	16.4	8.2	7.5	2.5	12.0	16.0	Q1
SN74ABT377ADWR	SOIC	DW	20	2000	330.0	24.4	10.8	13.3	2.7	12.0	24.0	Q1
SN74ABT377ANSR	SOP	NS	20	2000	330.0	24.4	8.4	13.0	2.5	12.0	24.0	Q1
SN74ABT377APWR	TSSOP	PW	20	2000	330.0	16.4	6.95	7.0	1.4	8.0	16.0	Q1

TAPE AND REEL BOX DIMENSIONS

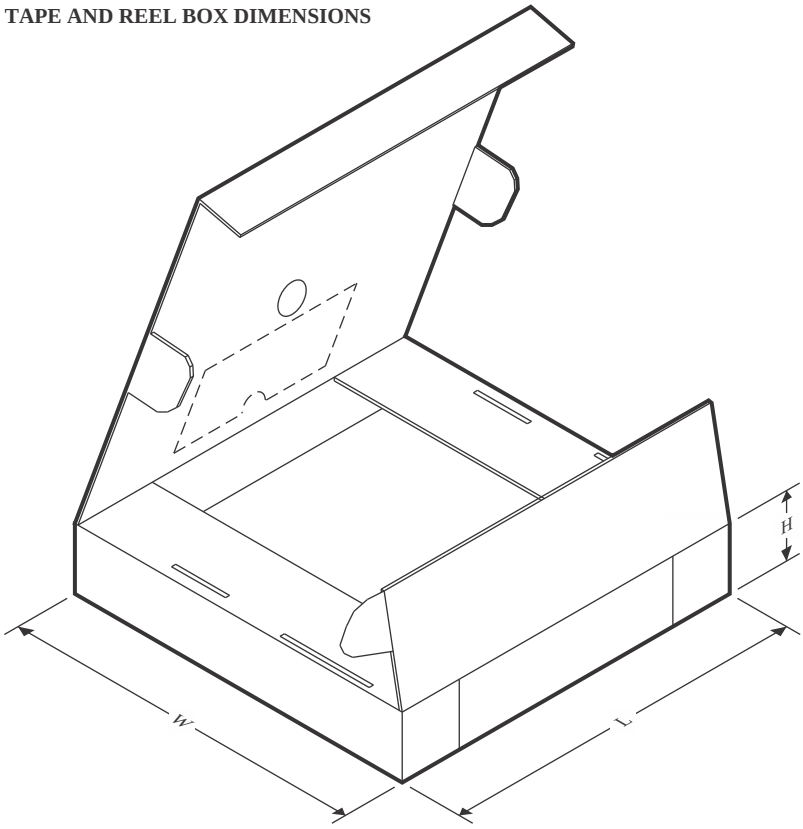

*All dimensions are nominal

Device	Package Type	Package Drawing	Pins	SPQ	Length (mm)	Width (mm)	Height (mm)
SN74ABT377ADBR	SSOP	DB	20	2000	356.0	356.0	35.0
SN74ABT377ADWR	SOIC	DW	20	2000	367.0	367.0	45.0
SN74ABT377ANSR	SOP	NS	20	2000	367.0	367.0	45.0
SN74ABT377APWR	TSSOP	PW	20	2000	356.0	356.0	35.0

TUBE

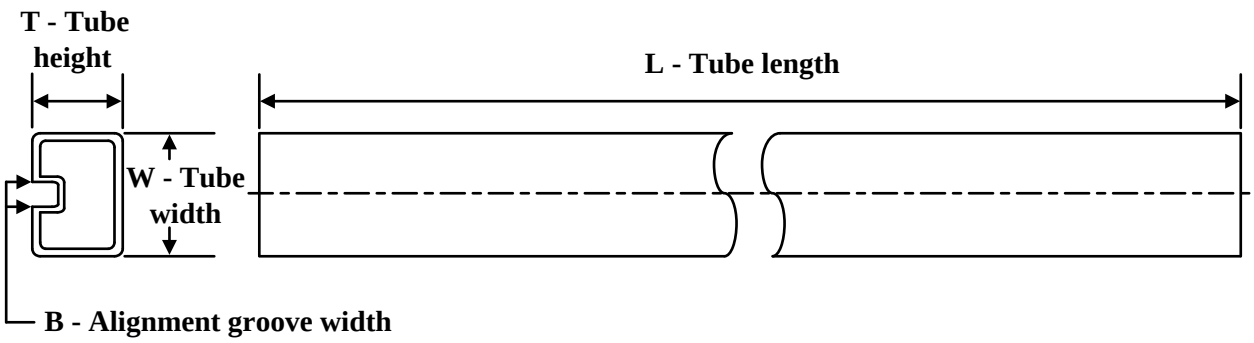

*All dimensions are nominal

Device	Package Name	Package Type	Pins	SPQ	L (mm)	W (mm)	T (µm)	B (mm)
5962-9314801Q2A	FK	LCCC	20	55	506.98	12.06	2030	NA
SN74ABT377ADW	DW	SOIC	20	25	507	12.83	5080	6.6
SN74ABT377ADW.B	DW	SOIC	20	25	507	12.83	5080	6.6
SN74ABT377ADWE4	DW	SOIC	20	25	507	12.83	5080	6.6
SN74ABT377AN	N	PDIP	20	20	506	13.97	11230	4.32
SN74ABT377AN.B	N	PDIP	20	20	506	13.97	11230	4.32
SN74ABT377APW	PW	TSSOP	20	70	530	10.2	3600	3.5
SN74ABT377APW.B	PW	TSSOP	20	70	530	10.2	3600	3.5
SNJ54ABT377FK	FK	LCCC	20	55	506.98	12.06	2030	NA

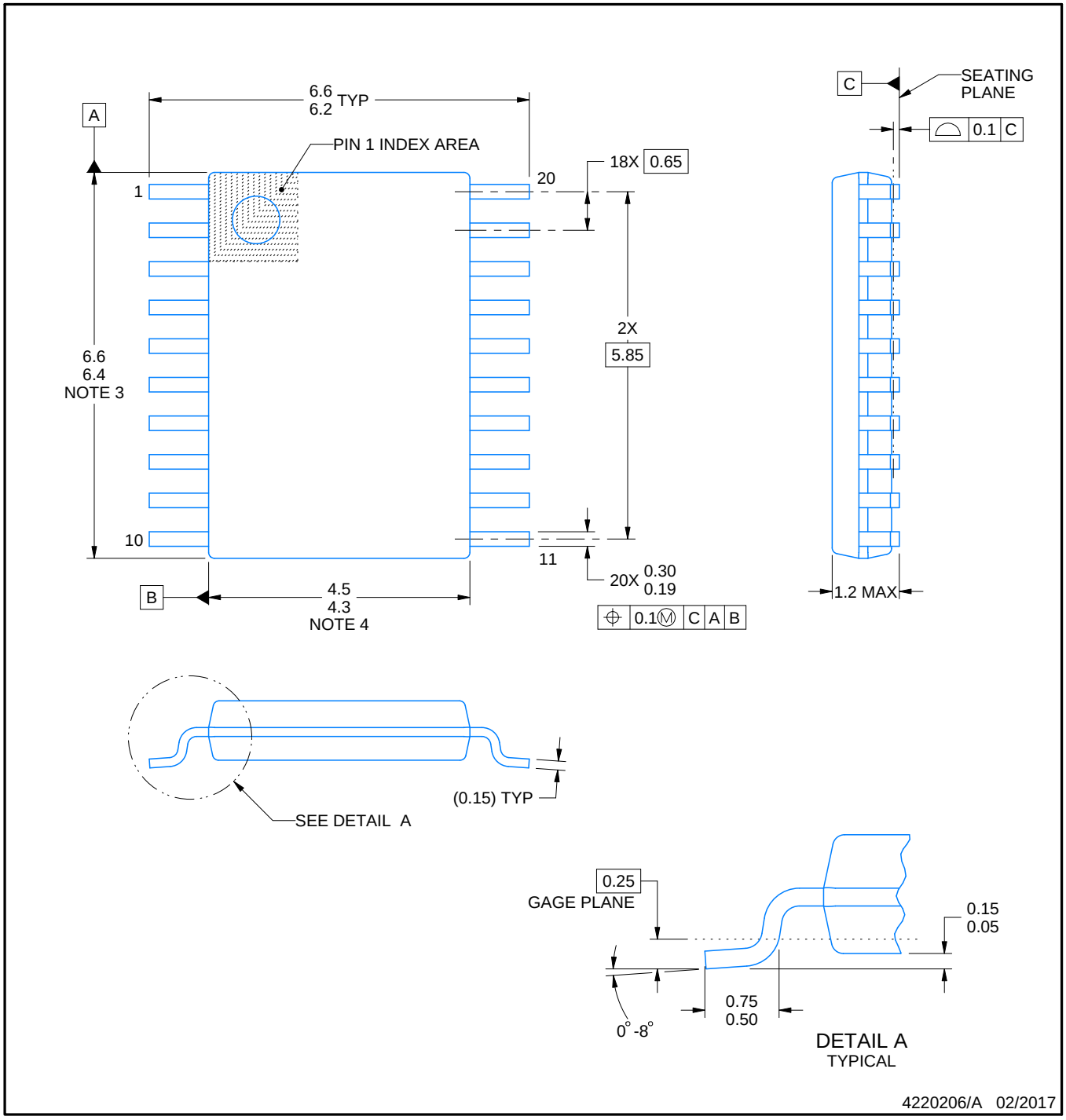

NOTES:

1. All linear dimensions are in millimeters. Any dimensions in parenthesis are for reference only. Dimensioning and tolerancing per ASME Y14.5M.
2. This drawing is subject to change without notice.
3. This dimension does not include mold flash, protrusions, or gate burrs. Mold flash, protrusions, or gate burrs shall not exceed 0.15 mm per side.
4. This dimension does not include interlead flash. Interlead flash shall not exceed 0.25 mm per side.
5. Reference JEDEC registration MO-153.

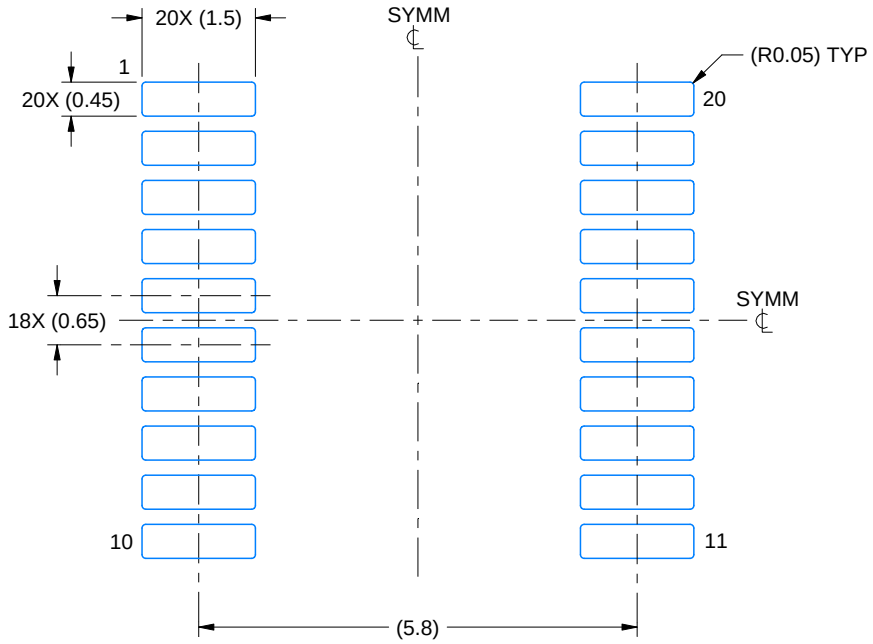

LAND PATTERN EXAMPLE
EXPOSED METAL SHOWN
SCALE: 10X

NON-SOLDER MASK DEFINED (PREFERRED)

SOLDER MASK DEFINED

SOLDER MASK DETAILS

4220206/A 02/2017

NOTES: (continued)

6. Publication IPC-7351 may have alternate designs.
7. Solder mask tolerances between and around signal pads can vary based on board fabrication site.

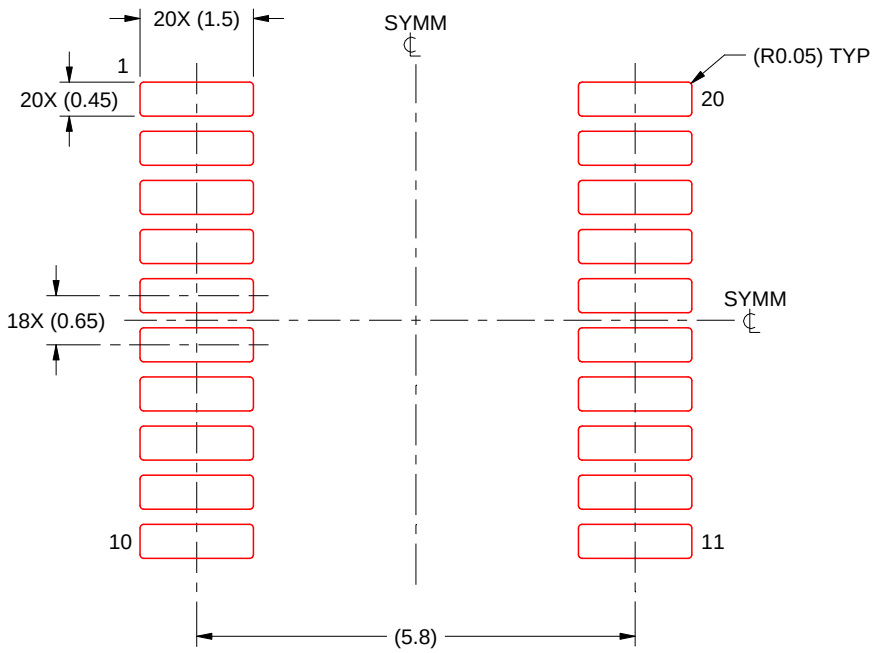

SOLDER PASTE EXAMPLE
BASED ON 0.125 mm THICK STENCIL
SCALE: 10X

4220206/A 02/2017

NOTES: (continued)

8. Laser cutting apertures with trapezoidal walls and rounded corners may offer better paste release. IPC-7525 may have alternate design recommendations.
9. Board assembly site may have different recommendations for stencil design.

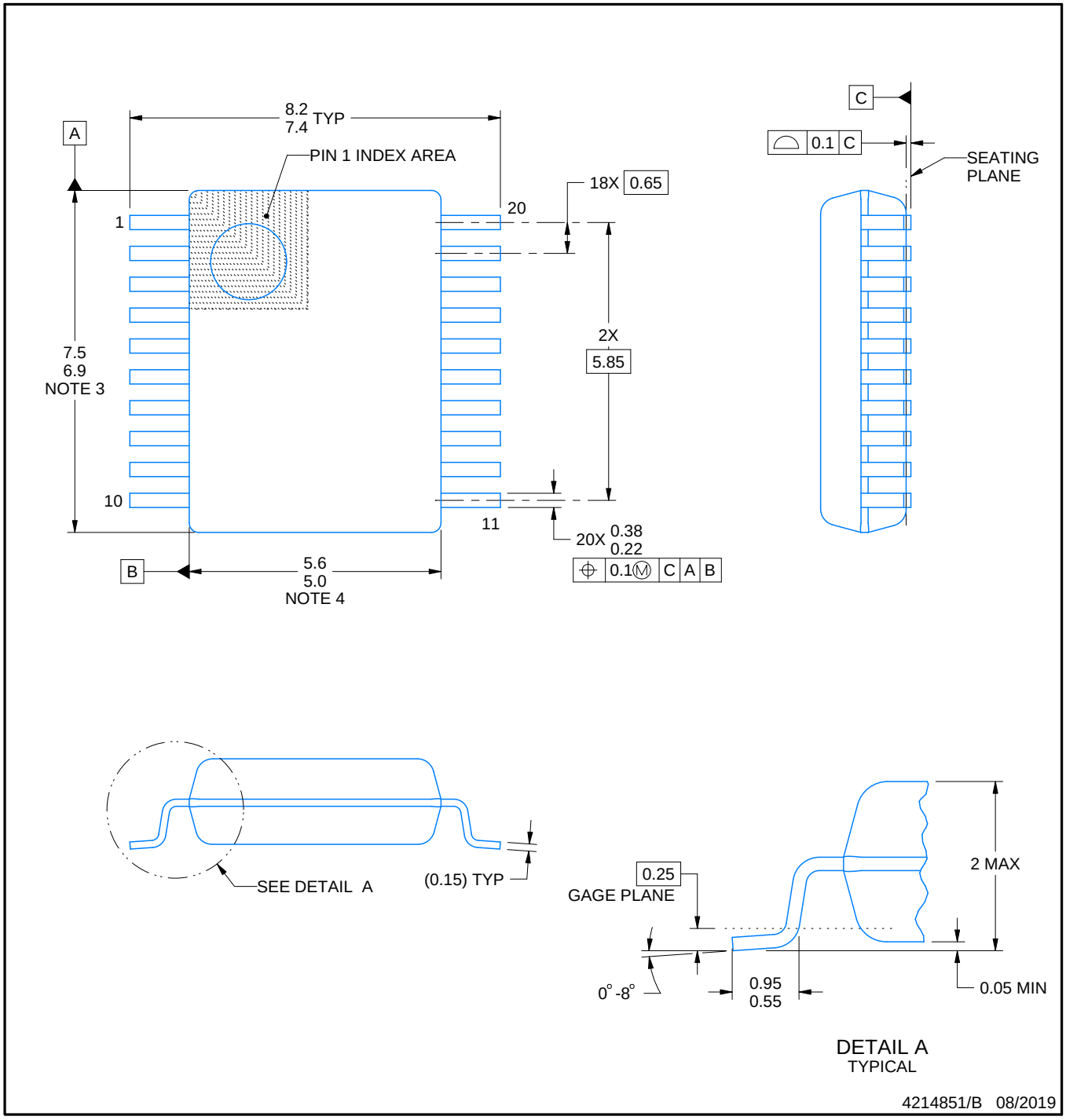

NOTES:

1. All linear dimensions are in millimeters. Any dimensions in parenthesis are for reference only. Dimensioning and tolerancing per ASME Y14.5M.
2. This drawing is subject to change without notice.
3. This dimension does not include mold flash, protrusions, or gate burrs. Mold flash, protrusions, or gate burrs shall not exceed 0.15 mm per side.
4. This dimension does not include interlead flash. Interlead flash shall not exceed 0.25 mm per side.
5. Reference JEDEC registration MO-150.

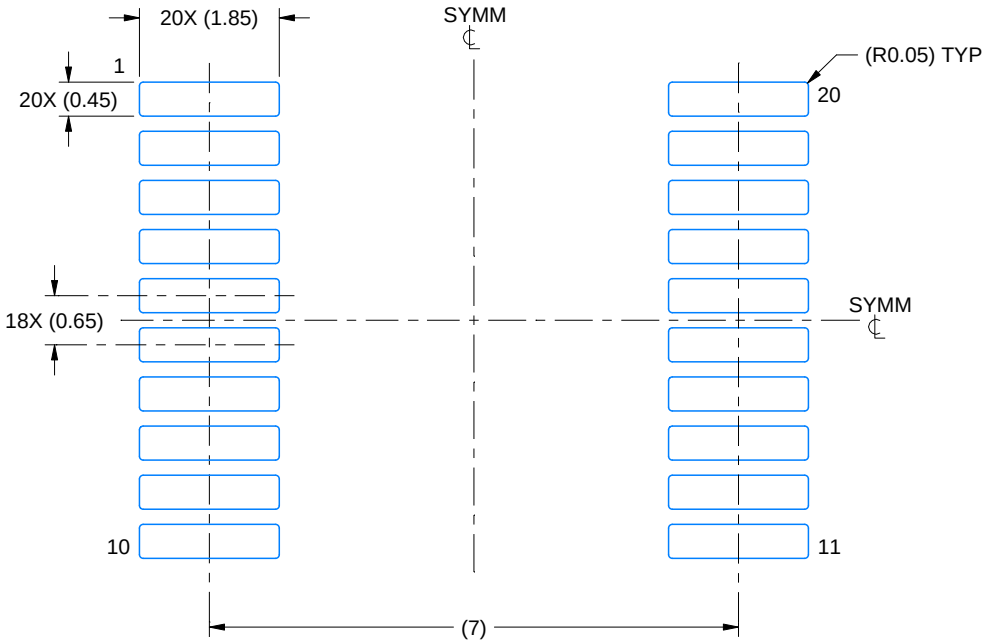

LAND PATTERN EXAMPLE
EXPOSED METAL SHOWN
SCALE: 10X

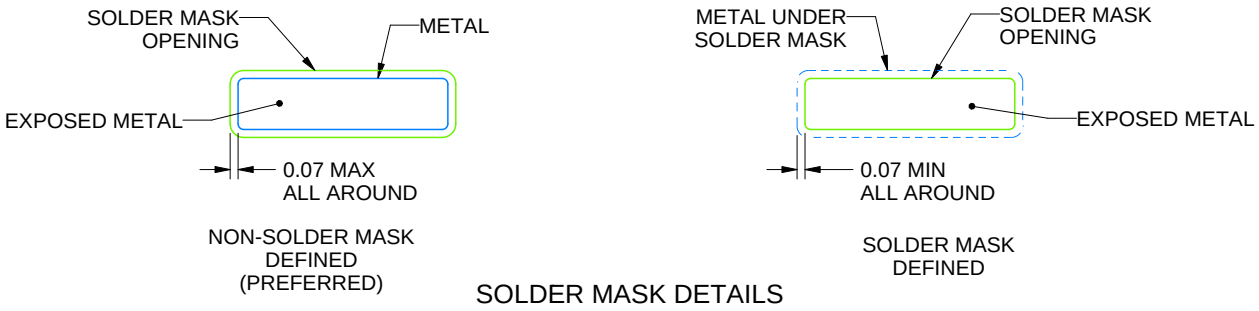

SOLDER MASK DETAILS

4214851/B 08/2019

NOTES: (continued)

6. Publication IPC-7351 may have alternate designs.
7. Solder mask tolerances between and around signal pads can vary based on board fabrication site.

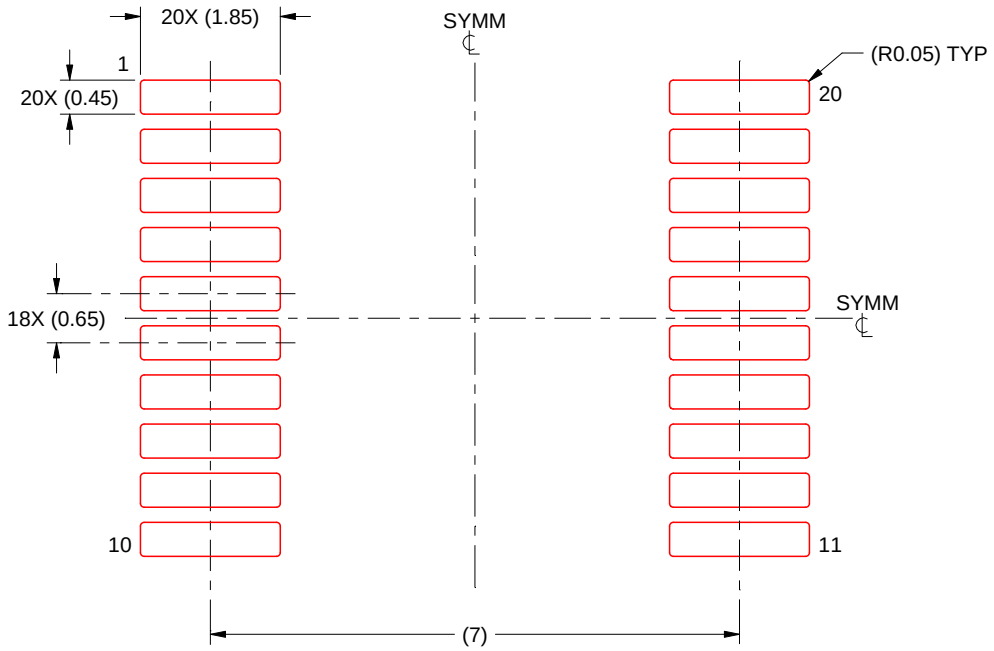

SOLDER PASTE EXAMPLE
BASED ON 0.125 mm THICK STENCIL
SCALE: 10X

4214851/B 08/2019

NOTES: (continued)

8. Laser cutting apertures with trapezoidal walls and rounded corners may offer better paste release. IPC-7525 may have alternate design recommendations.
9. Board assembly site may have different recommendations for stencil design.

MECHANICAL DATA

NS (R-PDSO-G)** **PLASTIC SMALL-OUTLINE PACKAGE**

14-PINS SHOWN

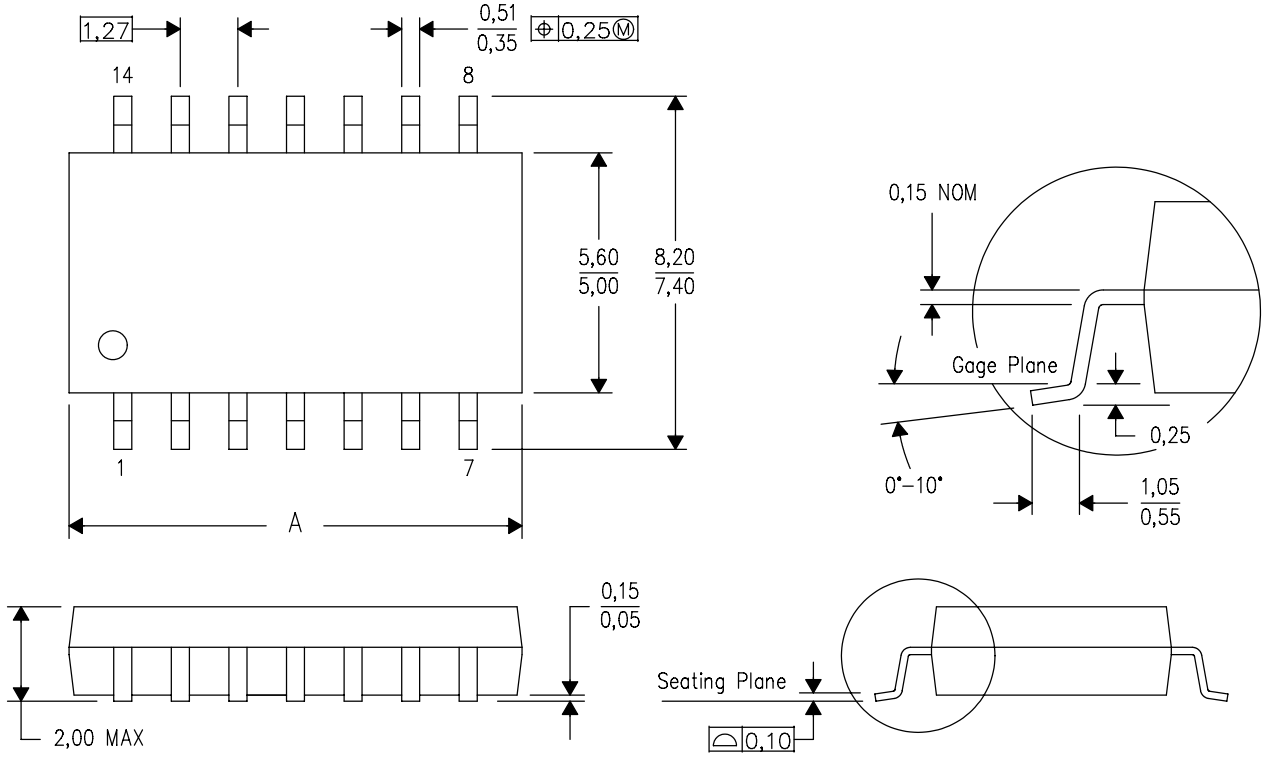

DIM \ PINS **	14	16	20	24
A MAX	10,50	10,50	12,90	15,30
A MIN	9,90	9,90	12,30	14,70

4040062/C 03/03

NOTES:
A. All linear dimensions are in millimeters.
B. This drawing is subject to change without notice.
C. Body dimensions do not include mold flash or protrusion, not to exceed 0,15.

J (R–GDIP–T**) CERAMIC DUAL IN–LINE PACKAGE

14 LEADS SHOWN

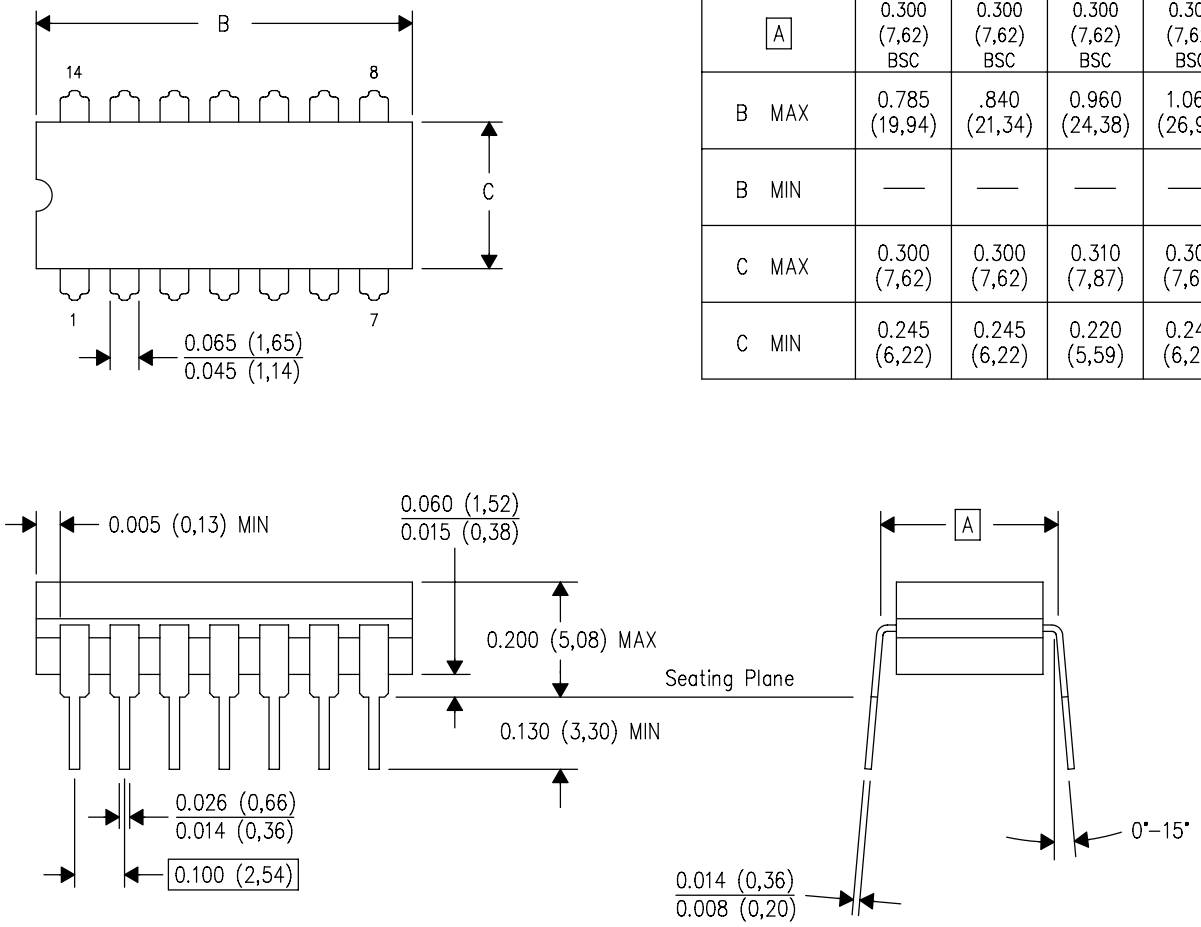

DIM \ PINS **	14	16	18	20
A	0.300 (7,62) BSC	0.300 (7,62) BSC	0.300 (7,62) BSC	0.300 (7,62) BSC
B MAX	0.785 (19,94)	.840 (21,34)	0.960 (24,38)	1.060 (26,92)
B MIN	—	—	—	—
C MAX	0.300 (7,62)	0.300 (7,62)	0.310 (7,87)	0.300 (7,62)
C MIN	0.245 (6,22)	0.245 (6,22)	0.220 (5,59)	0.245 (6,22)

4040083/F 03/03

NOTES:
- A. All linear dimensions are in inches (millimeters).
- B. This drawing is subject to change without notice.
- C. This package is hermetically sealed with a ceramic lid using glass frit.
- D. Index point is provided on cap for terminal identification only on press ceramic glass frit seal only.
- E. Falls within MIL STD 1835 GDIP1–T14, GDIP1–T16, GDIP1–T18 and GDIP1–T20.

GENERIC PACKAGE VIEW

FK 20

LCCC - 2.03 mm max height

8.89 x 8.89, 1.27 mm pitch

LEADLESS CERAMIC CHIP CARRIER

This image is a representation of the package family, actual package may vary.
Refer to the product data sheet for package details.

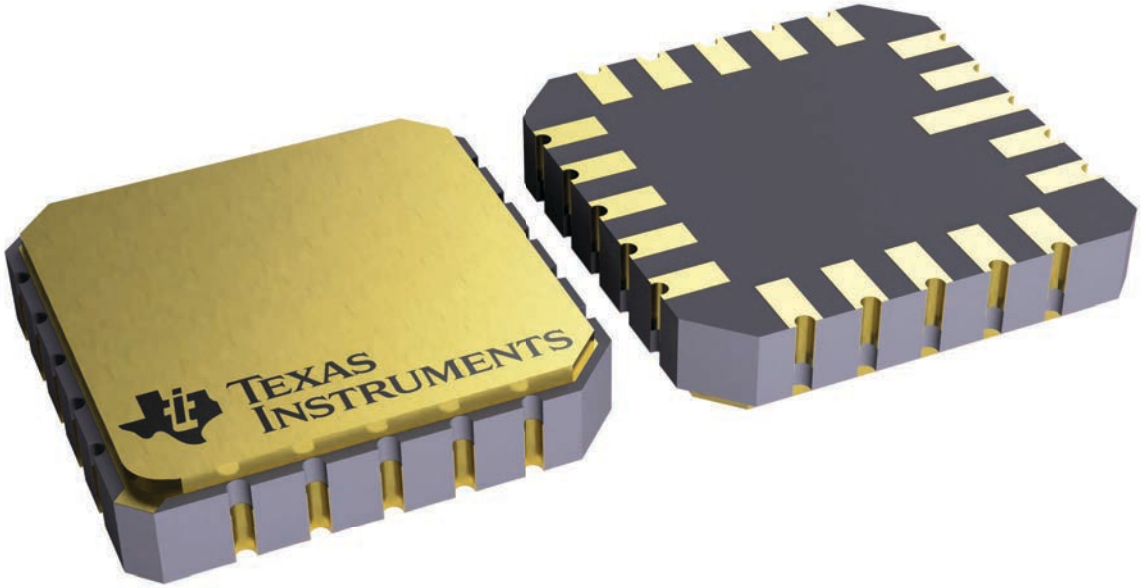

4229370VA\

N (R–PDIP–T**) PLASTIC DUAL–IN–LINE PACKAGE

16 PINS SHOWN

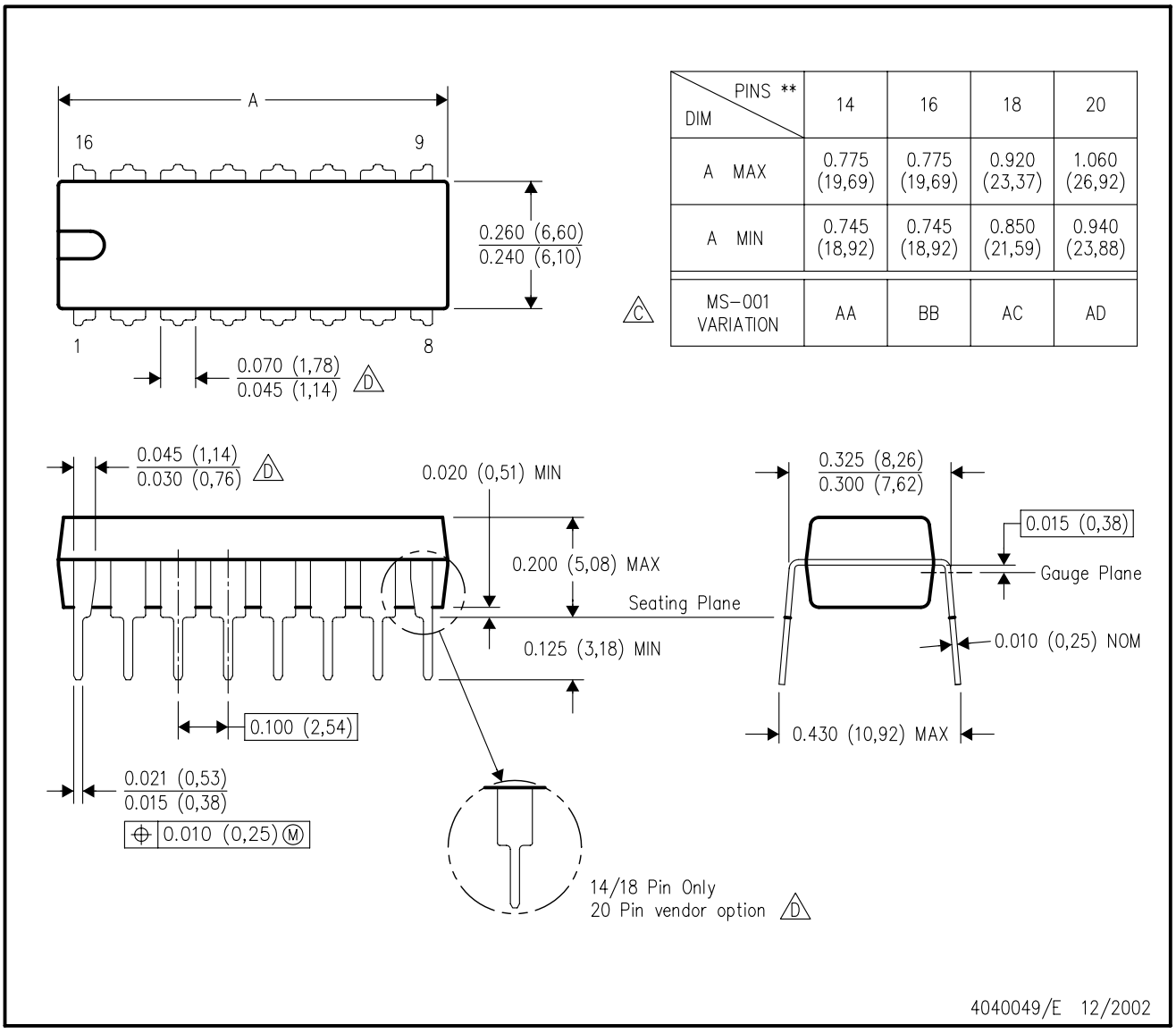

DIM \ PINS **	14	16	18	20
A MAX	0.775 (19,69)	0.775 (19,69)	0.920 (23,37)	1.060 (26,92)
A MIN	0.745 (18,92)	0.745 (18,92)	0.850 (21,59)	0.940 (23,88)
MS–001 VARIATION (C)	AA	BB	AC	AD

NOTES:
A. All linear dimensions are in inches (millimeters).
B. This drawing is subject to change without notice.
C. Falls within JEDEC MS–001, except 18 and 20 pin minimum body length (Dim A).
D. The 20 pin end lead shoulder width is a vendor option, either half or full width.

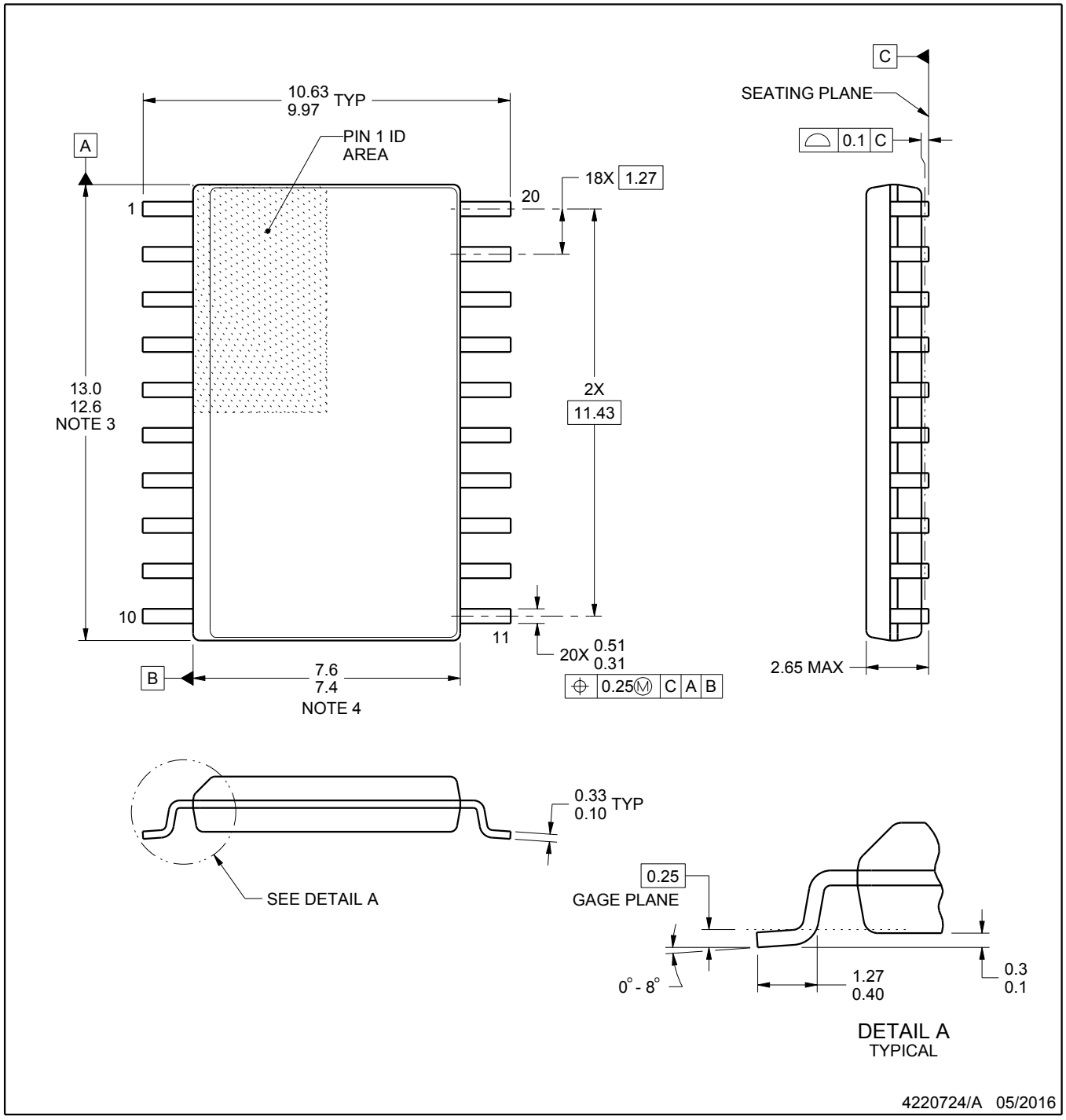

NOTES:

1. All linear dimensions are in millimeters. Dimensions in parenthesis are for reference only. Dimensioning and tolerancing per ASME Y14.5M.
2. This drawing is subject to change without notice.
3. This dimension does not include mold flash, protrusions, or gate burrs. Mold flash, protrusions, or gate burrs shall not exceed 0.15 mm per side.
4. This dimension does not include interlead flash. Interlead flash shall not exceed 0.43 mm per side.
5. Reference JEDEC registration MS-013.

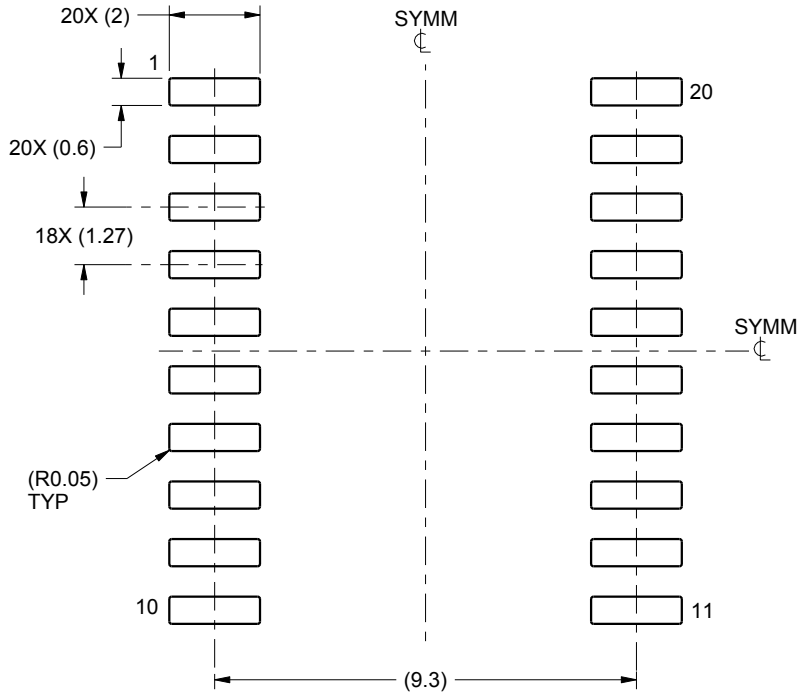

LAND PATTERN EXAMPLE
SCALE:6X

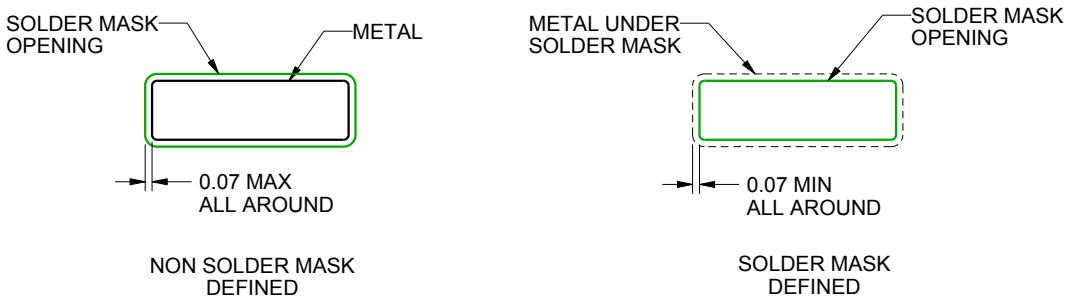

SOLDER MASK DETAILS

4220724/A 05/2016

NOTES: (continued)

6. Publication IPC-7351 may have alternate designs.
7. Solder mask tolerances between and around signal pads can vary based on board fabrication site.

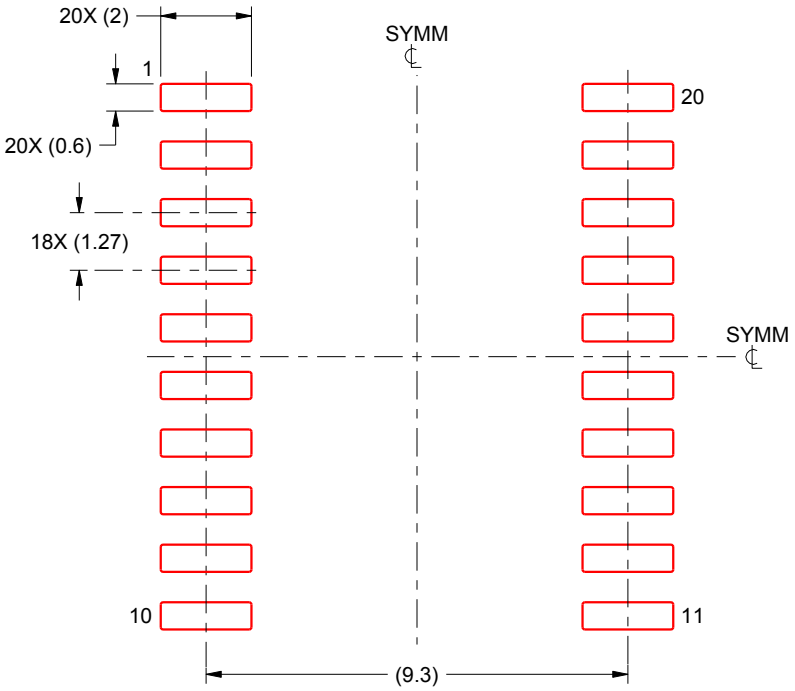

SOLDER PASTE EXAMPLE
BASED ON 0.125 mm THICK STENCIL
SCALE:6X

4220724/A 05/2016

NOTES: (continued)

8. Laser cutting apertures with trapezoidal walls and rounded corners may offer better paste release. IPC-7525 may have alternate design recommendations.
9. Board assembly site may have different recommendations for stencil design.

IMPORTANT NOTICE AND DISCLAIMER

TI PROVIDES TECHNICAL AND RELIABILITY DATA (INCLUDING DATA SHEETS), DESIGN RESOURCES (INCLUDING REFERENCE DESIGNS), APPLICATION OR OTHER DESIGN ADVICE, WEB TOOLS, SAFETY INFORMATION, AND OTHER RESOURCES “AS IS” AND WITH ALL FAULTS, AND DISCLAIMS ALL WARRANTIES, EXPRESS AND IMPLIED, INCLUDING WITHOUT LIMITATION ANY IMPLIED WARRANTIES OF MERCHANTABILITY, FITNESS FOR A PARTICULAR PURPOSE OR NON-INFRINGEMENT OF THIRD PARTY INTELLECTUAL PROPERTY RIGHTS.

These resources are intended for skilled developers designing with TI products. You are solely responsible for (1) selecting the appropriate TI products for your application, (2) designing, validating and testing your application, and (3) ensuring your application meets applicable standards, and any other safety, security, regulatory or other requirements.

These resources are subject to change without notice. TI grants you permission to use these resources only for development of an application that uses the TI products described in the resource. Other reproduction and display of these resources is prohibited. No license is granted to any other TI intellectual property right or to any third party intellectual property right. TI disclaims responsibility for, and you will fully indemnify TI and its representatives against, any claims, damages, costs, losses, and liabilities arising out of your use of these resources.

TI’s products are provided subject to TI’s Terms of Sale or other applicable terms available either on ti.com or provided in conjunction with such TI products. TI’s provision of these resources does not expand or otherwise alter TI’s applicable warranties or warranty disclaimers for TI products.

TI objects to and rejects any additional or different terms you may have proposed.

Mailing Address: Texas Instruments, Post Office Box 655303, Dallas, Texas 75265
Copyright © 2025, Texas Instruments Incorporated