TLC696x1 16-Channel, Local Dimming Backlight LED Driver

1 Features

- Operating voltage V_{CC} range: 3V to 5.5V
- 16 constant current sinks with high precision:
  - Maximum output current / voltage:
    - 30mA / 20V: TLC69601
    - 60mA / 20V: TLC69611
    - 30mA / 50V: TLC69651
    - 60mA / 50V: TLC69661
  - Device-to-device error: ±2% (typ.)
  - Channel-to-channel error: ±2% (typ.)
- Flexible dimming control:
  - Global 8-bit Maximum Current (MC) setting
  - Brightness resolution: up to 15-bit
  - PWM / Hybrid control mode
- High speed daisy chain interface:
  - I/O voltage compatible with: 1.8V / 3.3V
  - Data transfer rate: up to 20MHz
- High system efficiency:
  - Adaptive headroom voltage control (AHVC)
  - Ultra-low device power consumption:
    - Standby mode: I_{CC} ≤ 200μA
    - Normal mode: I_{CC} ≤ 3.5mA
- EMI enhancement:
  - Programmable interface driving capability
  - Integrated 4 phase-shifting schemes
- Display quality improvement:
  - Minimum brightness update latency
  - Programmable black insertion
  - Variable refresh rate (VRR) without flickering
- Diagnostics:
  - LED open / short detection for each zone
  - Device thermal shutdown detection
  - Report interface option:
    - UART and interrupt pin (INT)
    - Two-wire output: CLK_O and SOUT

2 Applications

- LCD local dimming backlight:
  - TV
  - Monitor
  - Notebook
  - Tablet

3 Description

TLC696x1 is a 16-channel, constant current sink driver. Each device integrates 16 constant current sinks with SRAM for brightness storage. The device connects to each other by two-wire serial interface in diasy chain topology and supports up to 1024 devices for 16,000 local dimming zones.

To optimize system effiency, the device equips with adaptive headroom voltage control scheme to directly control DC/DC. Only the FB pin from last device in serial chain should be connected to DC/DC to acheive simplified system layout. The device also integrates minimum brightness update latency, black insertion and VRR features to improve display quality.

TLC696x1 has three error flags: LED open detection (LOD), LED short detection (LSD) and thermal shutdown detection (TSD) for diagnostic. The device implements two options for readback including UART/INT and SOUT/CLK_O which is programmable by register.

Device Information

PART NUMBER	PACKAGE(1)	BODY SIZE (NOM)
TLC696x1	DSBGA (24)	1.58mm × 2.43mm
	WQFN (24)	4mm × 4mm

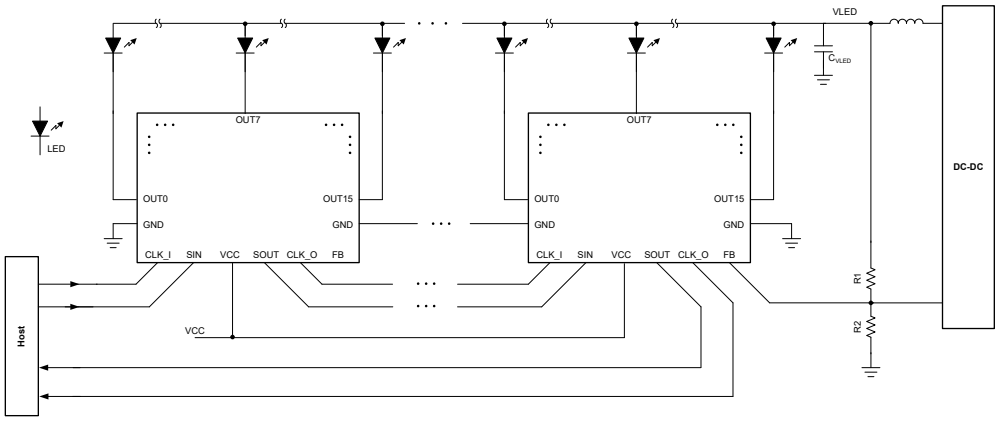

Simplified Schematic

An IMPORTANT NOTICE at the end of this data sheet addresses availability, warranty, changes, use in safety-critical applications, intellectual property matters and other important disclaimers. PRODUCTION DATA.

Table of Contents

1 Features.....1
2 Applications.....1
3 Description.....1
4 Device and Documentation Support.....3
4.1 Receiving Notification of Documentation Updates.....3
4.2 Support Resources.....3
4.3 Trademarks.....3
4.4 Electrostatic Discharge Caution.....3
4.5 Glossary.....3
5 Revision History.....3
6 Mechanical, Packaging, and Orderable Information.....4

Copyright © 2024 Texas Instruments Incorporated

4 Device and Documentation Support

TI offers an extensive line of development tools. Tools and software to evaluate the performance of the device, generate code, and develop solutions are listed below.

4.1 Receiving Notification of Documentation Updates

To receive notification of documentation updates, navigate to the device product folder on ti.com. Click on *Notifications* to register and receive a weekly digest of any product information that has changed. For change details, review the revision history included in any revised document.

4.2 Support Resources

TI E2E™ support forums are an engineer's go-to source for fast, verified answers and design help — straight from the experts. Search existing answers or ask your own question to get the quick design help you need.

Linked content is provided "AS IS" by the respective contributors. They do not constitute TI specifications and do not necessarily reflect TI's views; see TI's Terms of Use.

4.3 Trademarks

TI E2E™ is a trademark of Texas Instruments.
All trademarks are the property of their respective owners.

4.4 Electrostatic Discharge Caution

This integrated circuit can be damaged by ESD. Texas Instruments recommends that all integrated circuits be handled with appropriate precautions. Failure to observe proper handling and installation procedures can cause damage.

ESD damage can range from subtle performance degradation to complete device failure. Precision integrated circuits may be more susceptible to damage because very small parametric changes could cause the device not to meet its published specifications.

4.5 Glossary

TI Glossary This glossary lists and explains terms, acronyms, and definitions.

5 Revision History

NOTE: Page numbers for previous revisions may differ from page numbers in the current version.

DATE	REVISION	NOTES
April 2023	*	Initial Release

6 Mechanical, Packaging, and Orderable Information

The following pages include mechanical, packaging, and orderable information. This information is the most current data available for the designated devices. This data is subject to change without notice and revision of this document. For browser-based versions of this data sheet, refer to the left-hand navigation.

Copyright © 2024 Texas Instruments Incorporated

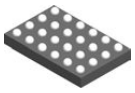

PACKAGE OUTLINE

YBH0024-C01

DSBGA - 0.4 mm max height

DIE SIZE BALL GRID ARRAY

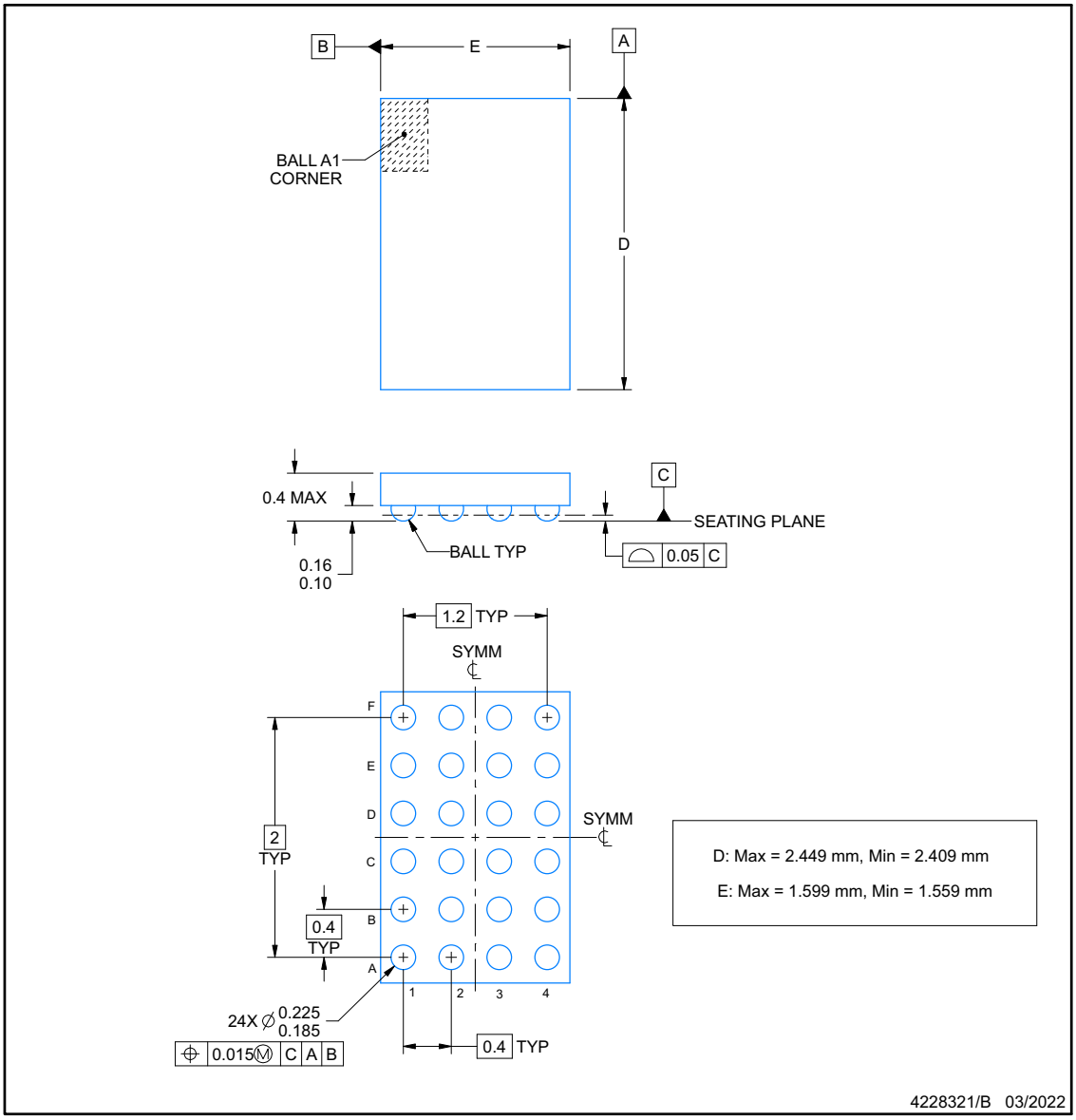

NOTES:

1. All linear dimensions are in millimeters. Any dimensions in parenthesis are for reference only. Dimensioning and tolerancing per ASME Y14.5M.
2. This drawing is subject to change without notice.

Copyright © 2024 Texas Instruments Incorporated

EXAMPLE BOARD LAYOUT

YBH0024-C01

DSBGA - 0.4 mm max height

DIE SIZE BALL GRID ARRAY

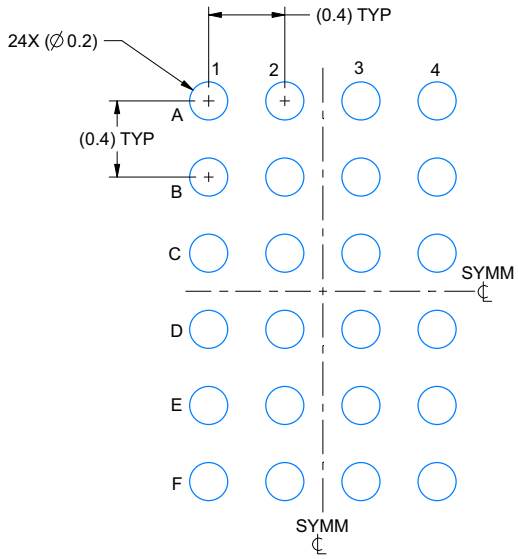

LAND PATTERN EXAMPLE
EXPOSED METAL SHOWN
SCALE: 30X

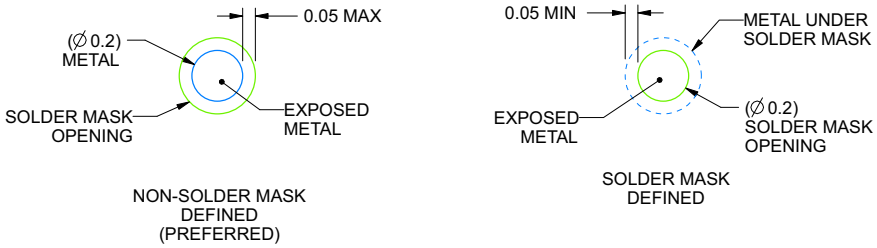

SOLDER MASK DETAILS
NOT TO SCALE

4228321/B 03/2022

NOTES: (continued)

3. Final dimensions may vary due to manufacturing tolerance considerations and also routing constraints.
   See Texas Instruments Literature No. SNVA009 (www.ti.com/lit/snva009).

Copyright © 2024 Texas Instruments Incorporated

EXAMPLE STENCIL DESIGN

YBH0024-C01

DSBGA - 0.4 mm max height

DIE SIZE BALL GRID ARRAY

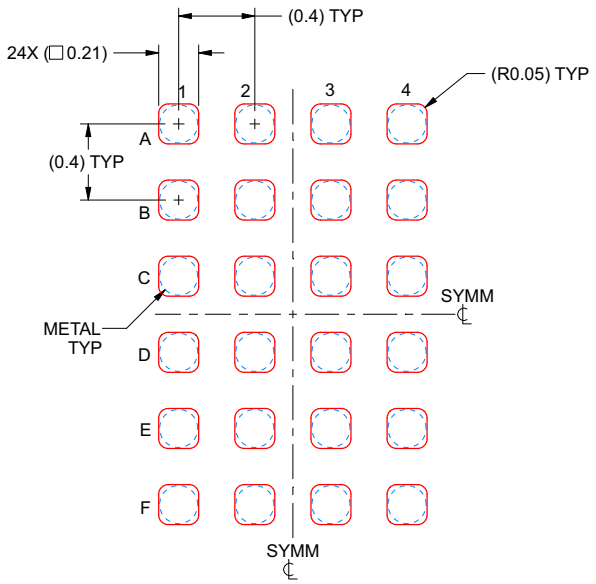

SOLDER PASTE EXAMPLE
BASED ON 0.075 mm THICK STENCIL
SCALE: 30X

4228321/B 03/2022

NOTES: (continued)

4. Laser cutting apertures with trapezoidal walls and rounded corners may offer better paste release.

Copyright © 2024 Texas Instruments Incorporated

PACKAGE OUTLINE

RTW0024B

WQFN - 0.8 mm max height

PLASTIC QUAD FLATPACK-NO LEAD

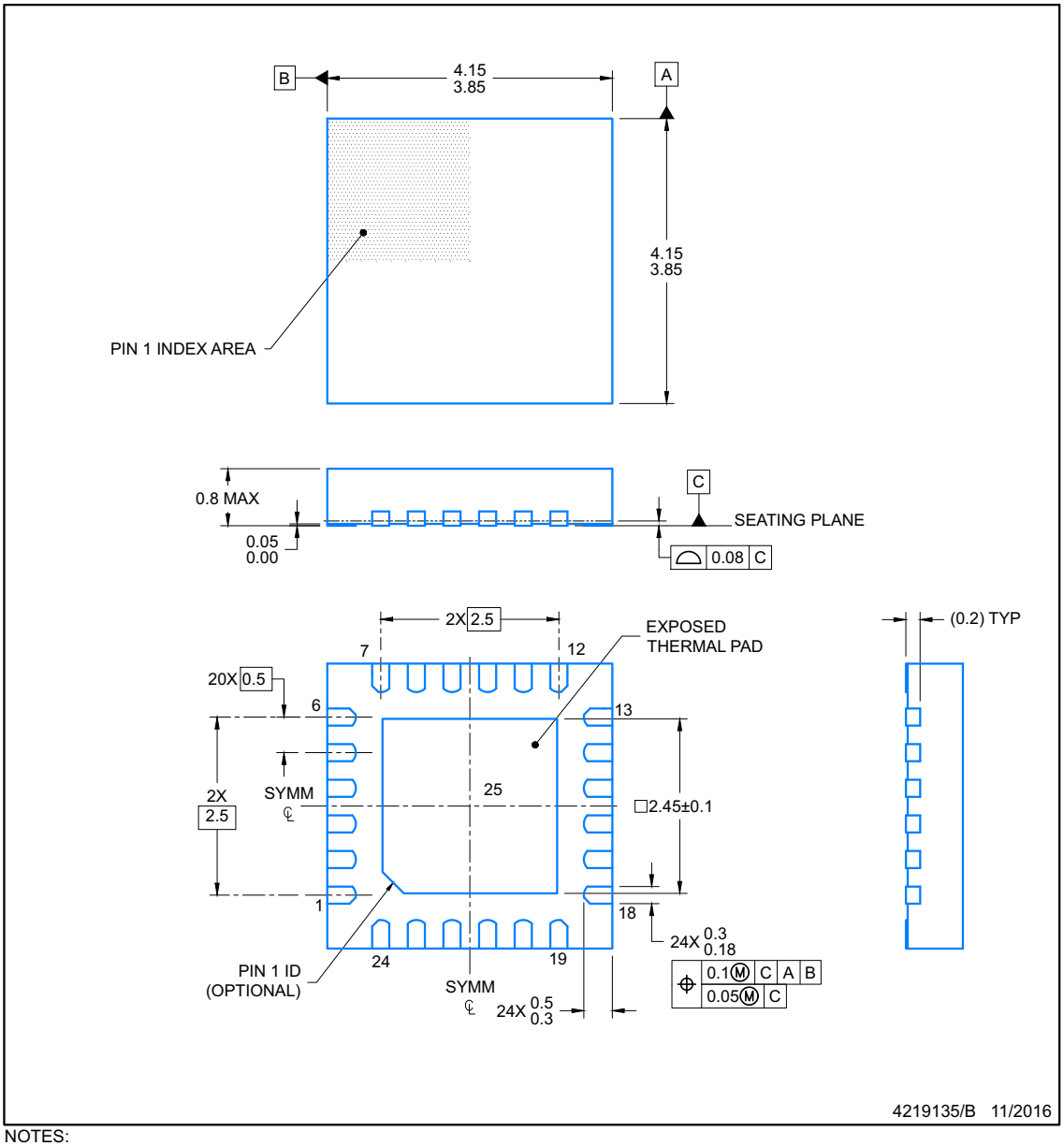

NOTES:

1. All linear dimensions are in millimeters. Any dimensions in parenthesis are for reference only. Dimensioning and tolerancing per ASME Y14.5M.
2. This drawing is subject to change without notice.

Copyright © 2024 Texas Instruments Incorporated

EXAMPLE BOARD LAYOUT

RTW0024B **WQFN - 0.8 mm max height**

PLASTIC QUAD FLATPACK-NO LEAD

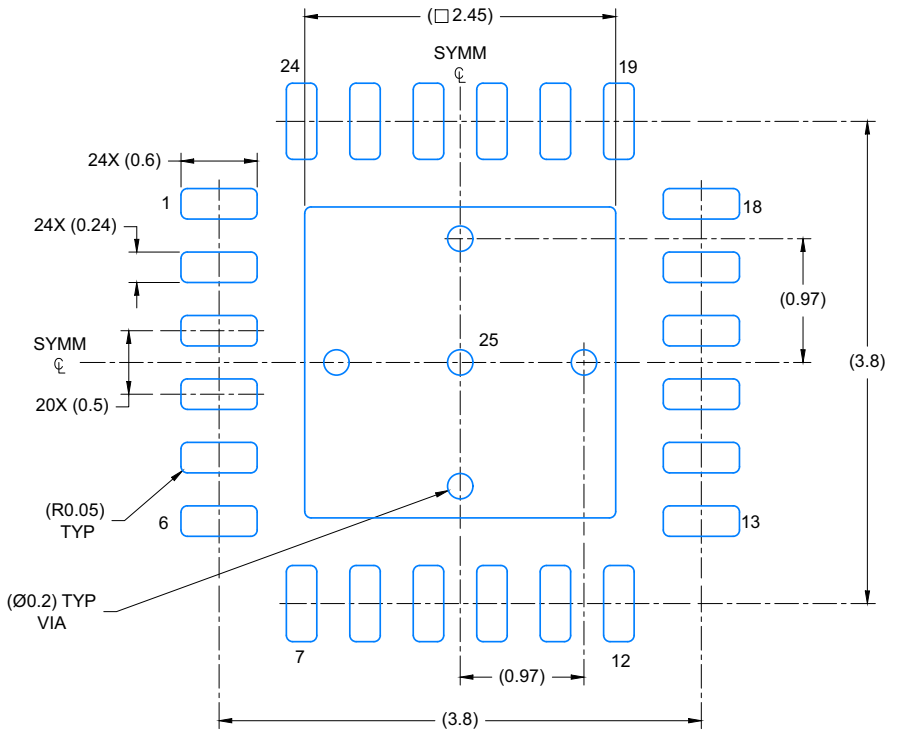

LAND PATTERN EXAMPLE
SCALE: 20X

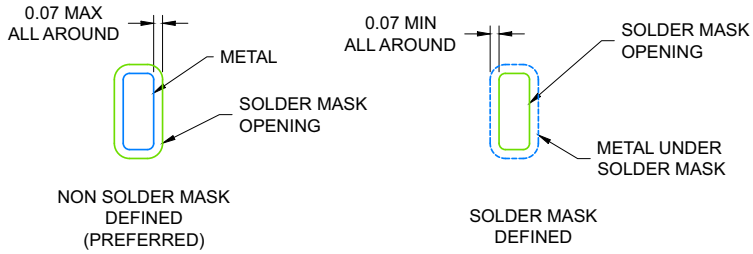

SOLDER MASK DETAILS

4219135/B 11/2016

NOTES: (continued)

3. For more information, see Texas Instruments literature number SLUA271 (www.ti.com/lit/slua271).

Copyright © 2024 Texas Instruments Incorporated

EXAMPLE STENCIL DESIGN

RTW0024B **WQFN - 0.8 mm max height**

PLASTIC QUAD FLATPACK-NO LEAD

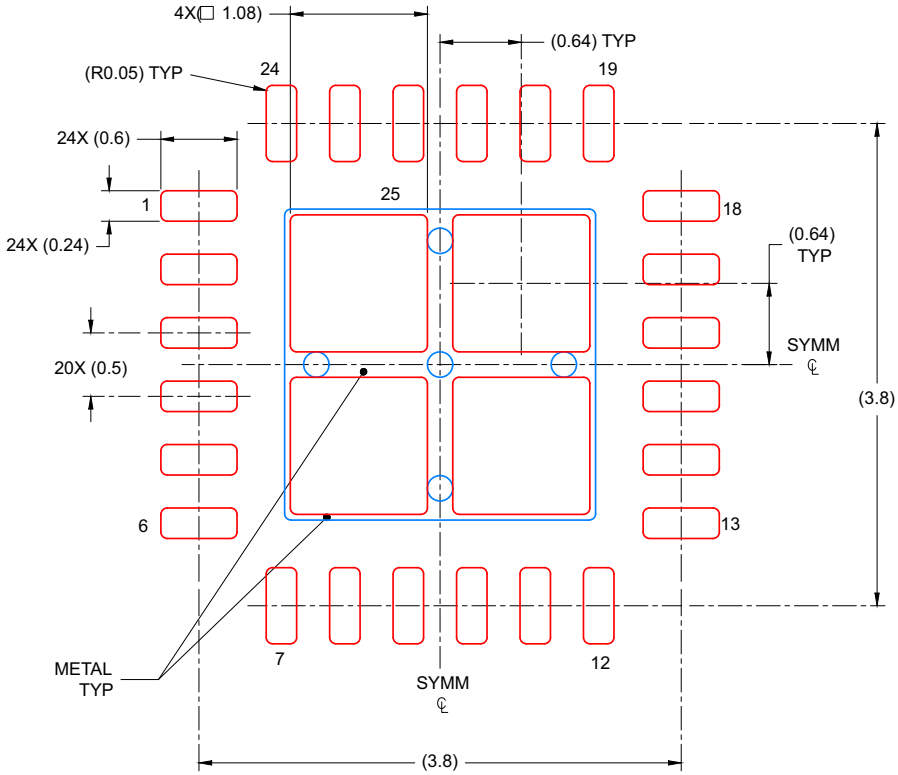

SOLDER PASTE EXAMPLE
BASED ON 0.125 mm THICK STENCIL

EXPOSED PAD 25:
78% PRINTED COVERAGE BY AREA UNDER PACKAGE
SCALE: 20X

4219135/B 11/2016

NOTES: (continued)

4. Laser cutting apertures with trapezoidal walls and rounded corners may offer better paste release. IPC-7525 may have alternate design recommendations.

Copyright © 2024 Texas Instruments Incorporated

PACKAGING INFORMATION

Orderable part number	Status (1)	Material type (2)	Package | Pins	Package qty | Carrier	RoHS (3)	Lead finish/ Ball material (4)	MSL rating/ Peak reflow (5)	Op temp (°C)	Part marking (6)
TLC69601RTWR	Active	Production	WQFN (RTW) | 24	3000 | LARGE T&R	Yes	NIPDAU	Level-1-260C-UNLIM	-40 to 85	69601
TLC69601RTWR.A	Active	Production	WQFN (RTW) | 24	3000 | LARGE T&R	Yes	NIPDAU	Level-1-260C-UNLIM	-40 to 85	69601
TLC69601YBHR	Active	Production	DSBGA (YBH) | 24	3000 | LARGE T&R	Yes	SNAGCU	Level-1-260C-UNLIM	-40 to 85	TLC69601
TLC69601YBHR.A	Active	Production	DSBGA (YBH) | 24	3000 | LARGE T&R	Yes	SNAGCU	Level-1-260C-UNLIM	-40 to 85	TLC69601
TLC69611RTWR	Active	Production	WQFN (RTW) | 24	3000 | LARGE T&R	Yes	NIPDAU	Level-1-260C-UNLIM	-40 to 85	69611
TLC69611RTWR.A	Active	Production	WQFN (RTW) | 24	3000 | LARGE T&R	Yes	NIPDAU	Level-1-260C-UNLIM	-40 to 85	69611
TLC69611YBHR	Active	Production	DSBGA (YBH) | 24	3000 | LARGE T&R	Yes	SNAGCU	Level-1-260C-UNLIM	-40 to 85	TLC69611
TLC69611YBHR.A	Active	Production	DSBGA (YBH) | 24	3000 | LARGE T&R	Yes	SNAGCU	Level-1-260C-UNLIM	-40 to 85	TLC69611
TLC69651RTWR	Active	Production	WQFN (RTW) | 24	3000 | LARGE T&R	Yes	NIPDAU	Level-1-260C-UNLIM	-40 to 85	69651
TLC69651RTWR.A	Active	Production	WQFN (RTW) | 24	3000 | LARGE T&R	Yes	NIPDAU	Level-1-260C-UNLIM	-40 to 85	69651
TLC69651YBHR	Active	Production	DSBGA (YBH) | 24	3000 | LARGE T&R	Yes	SNAGCU	Level-1-260C-UNLIM	-40 to 85	TLC69651
TLC69651YBHR.A	Active	Production	DSBGA (YBH) | 24	3000 | LARGE T&R	Yes	SNAGCU	Level-1-260C-UNLIM	-40 to 85	TLC69651
TLC69661RTWR	Active	Production	WQFN (RTW) | 24	3000 | LARGE T&R	Yes	NIPDAU	Level-1-260C-UNLIM	-40 to 85	69661
TLC69661RTWR.A	Active	Production	WQFN (RTW) | 24	3000 | LARGE T&R	Yes	NIPDAU	Level-1-260C-UNLIM	-40 to 85	69661
TLC69661YBHR	Active	Production	DSBGA (YBH) | 24	3000 | LARGE T&R	Yes	SNAGCU	Level-1-260C-UNLIM	-40 to 85	TLC69661
TLC69661YBHR.A	Active	Production	DSBGA (YBH) | 24	3000 | LARGE T&R	Yes	SNAGCU	Level-1-260C-UNLIM	-40 to 85	TLC69661

(1) **Status:** For more details on status, see our product life cycle.

(2) **Material type:** When designated, preproduction parts are prototypes/experimental devices, and are not yet approved or released for full production. Testing and final process, including without limitation quality assurance, reliability performance testing, and/or process qualification, may not yet be complete, and this item is subject to further changes or possible discontinuation. If available for ordering, purchases will be subject to an additional waiver at checkout, and are intended for early internal evaluation purposes only. These items are sold without warranties of any kind.

(3) **RoHS values:** Yes, No, RoHS Exempt. See the TI RoHS Statement for additional information and value definition.

(4) **Lead finish/Ball material:** Parts may have multiple material finish options. Finish options are separated by a vertical ruled line. Lead finish/Ball material values may wrap to two lines if the finish value exceeds the maximum column width.

(5) **MSL rating/Peak reflow:** The moisture sensitivity level ratings and peak solder (reflow) temperatures. In the event that a part has multiple moisture sensitivity ratings, only the lowest level per JEDEC standards is shown. Refer to the shipping label for the actual reflow temperature that will be used to mount the part to the printed circuit board.

(6) **Part marking:** There may be an additional marking, which relates to the logo, the lot trace code information, or the environmental category of the part.

Multiple part markings will be inside parentheses. Only one part marking contained in parentheses and separated by a "~" will appear on a part. If a line is indented then it is a continuation of the previous line and the two combined represent the entire part marking for that device.

Important Information and Disclaimer: The information provided on this page represents TI's knowledge and belief as of the date that it is provided. TI bases its knowledge and belief on information provided by third parties, and makes no representation or warranty as to the accuracy of such information. Efforts are underway to better integrate information from third parties. TI has taken and continues to take reasonable steps to provide representative and accurate information but may not have conducted destructive testing or chemical analysis on incoming materials and chemicals. TI and TI suppliers consider certain information to be proprietary, and thus CAS numbers and other limited information may not be available for release.

In no event shall TI's liability arising out of such information exceed the total purchase price of the TI part(s) at issue in this document sold by TI to Customer on an annual basis.

OTHER QUALIFIED VERSIONS OF TLC69601, TLC69611, TLC69651, TLC69661 :

- Automotive : TLC69601-Q1, TLC69611-Q1, TLC69651-Q1, TLC69661-Q1

NOTE: Qualified Version Definitions:

- Automotive - Q100 devices qualified for high-reliability automotive applications targeting zero defects

GENERIC PACKAGE VIEW

RTW 24

WQFN - 0.8 mm max height

4 x 4, 0.5 mm pitch

PLASTIC QUAD FLATPACK - NO LEAD

This image is a representation of the package family, actual package may vary.
Refer to the product data sheet for package details.

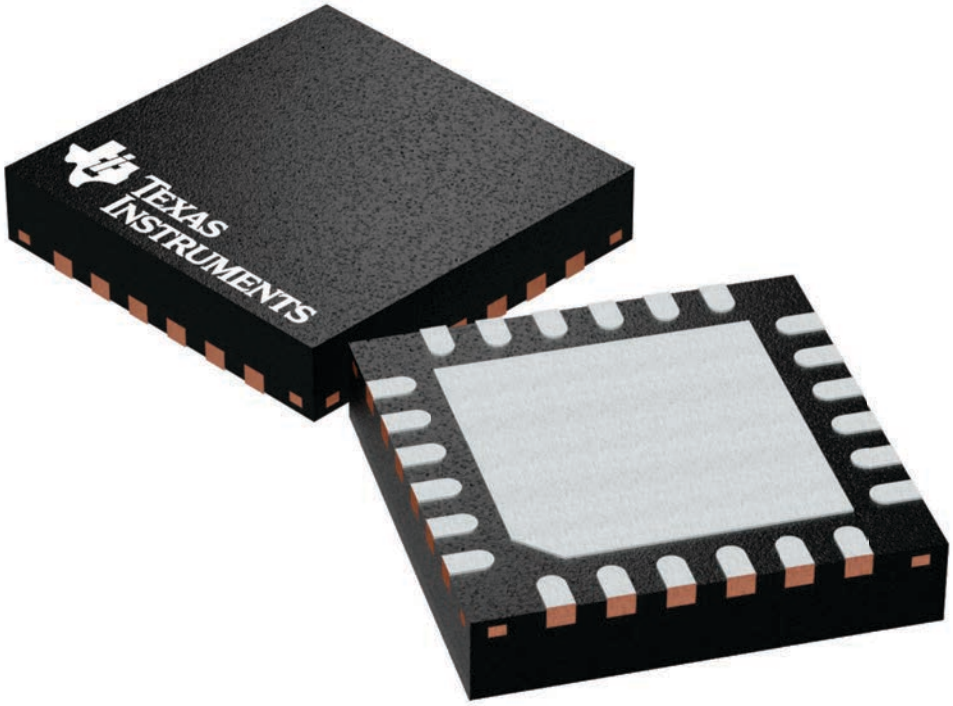

4224801/A

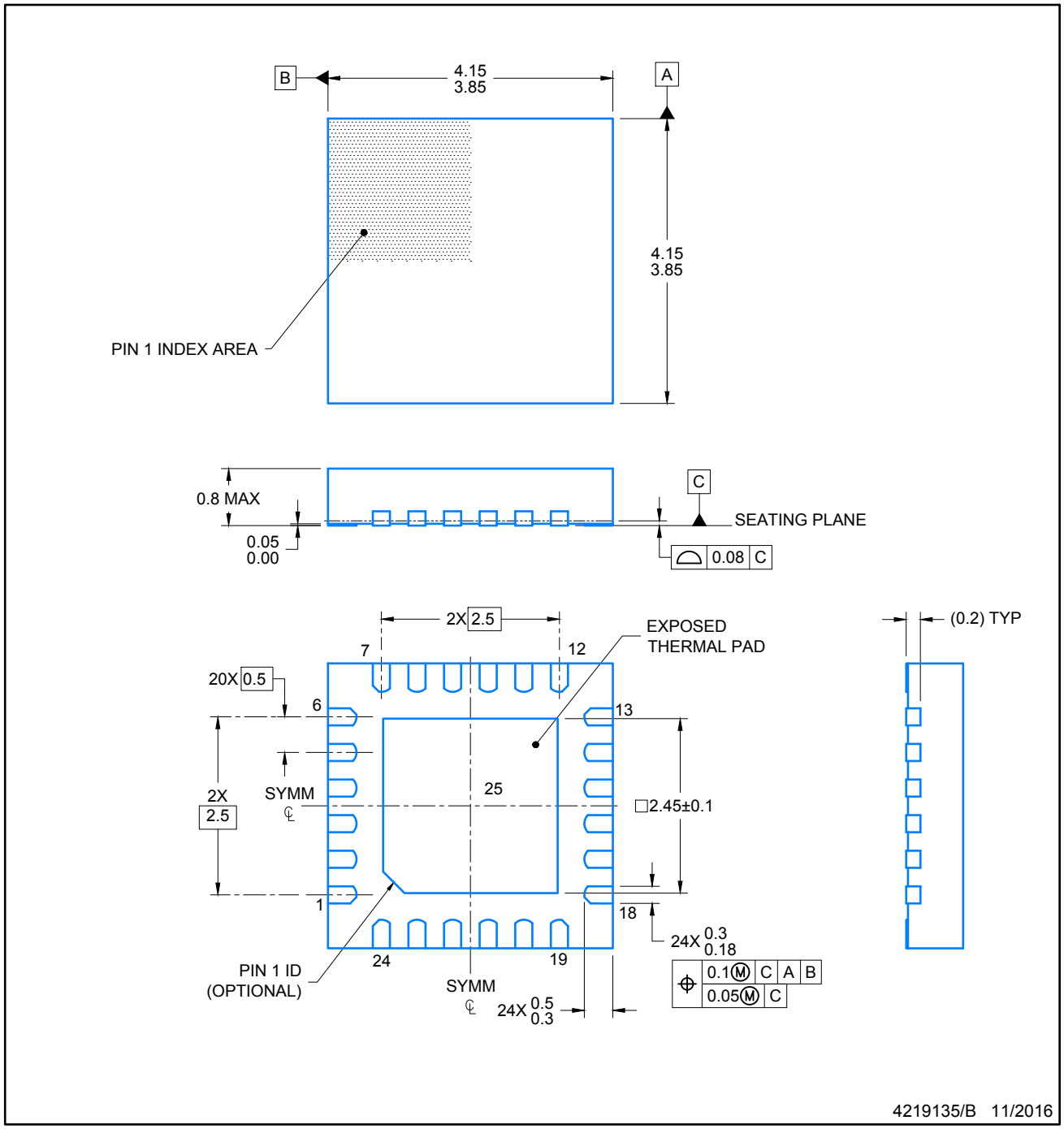

NOTES:

1. All linear dimensions are in millimeters. Any dimensions in parenthesis are for reference only. Dimensioning and tolerancing per ASME Y14.5M.
2. This drawing is subject to change without notice.

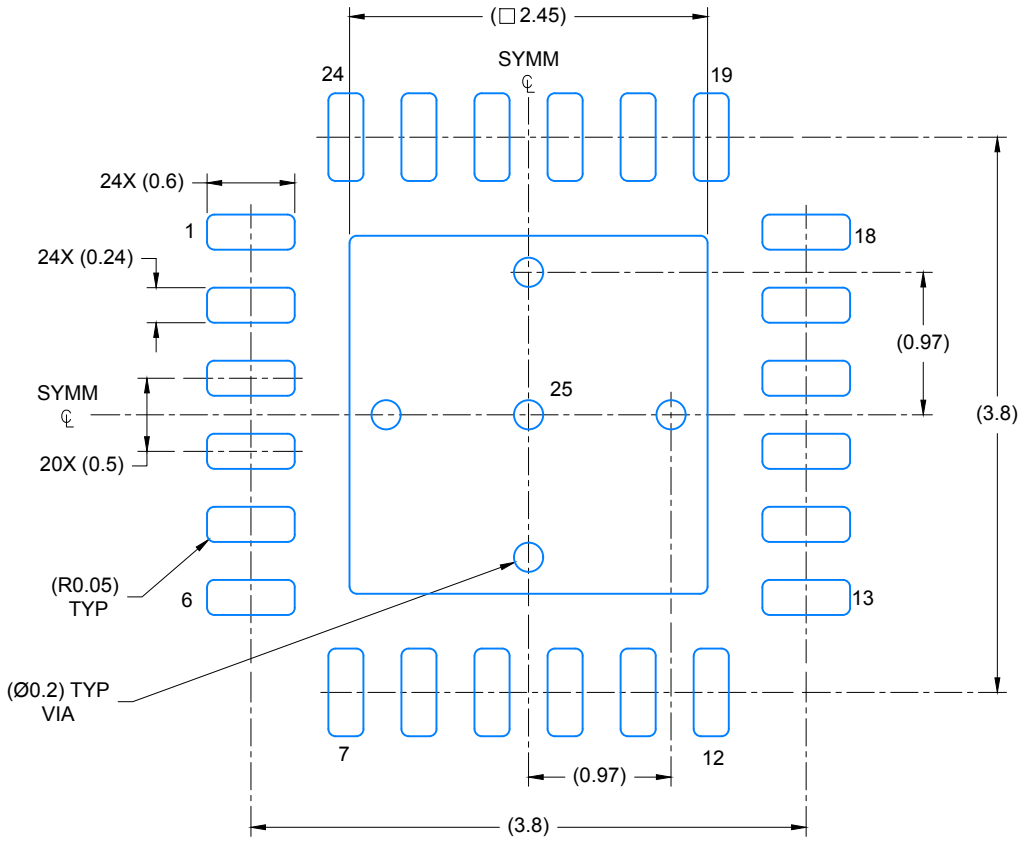

LAND PATTERN EXAMPLE

SCALE: 20X

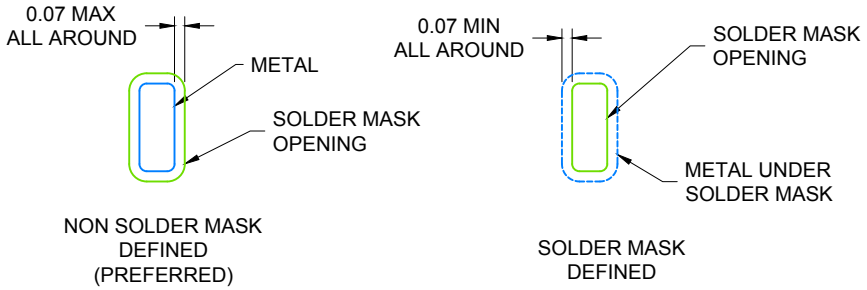

SOLDER MASK DETAILS

4219135/B 11/2016

NOTES: (continued)

3. For more information, see Texas Instruments literature number SLUA271 (www.ti.com/lit/slua271).

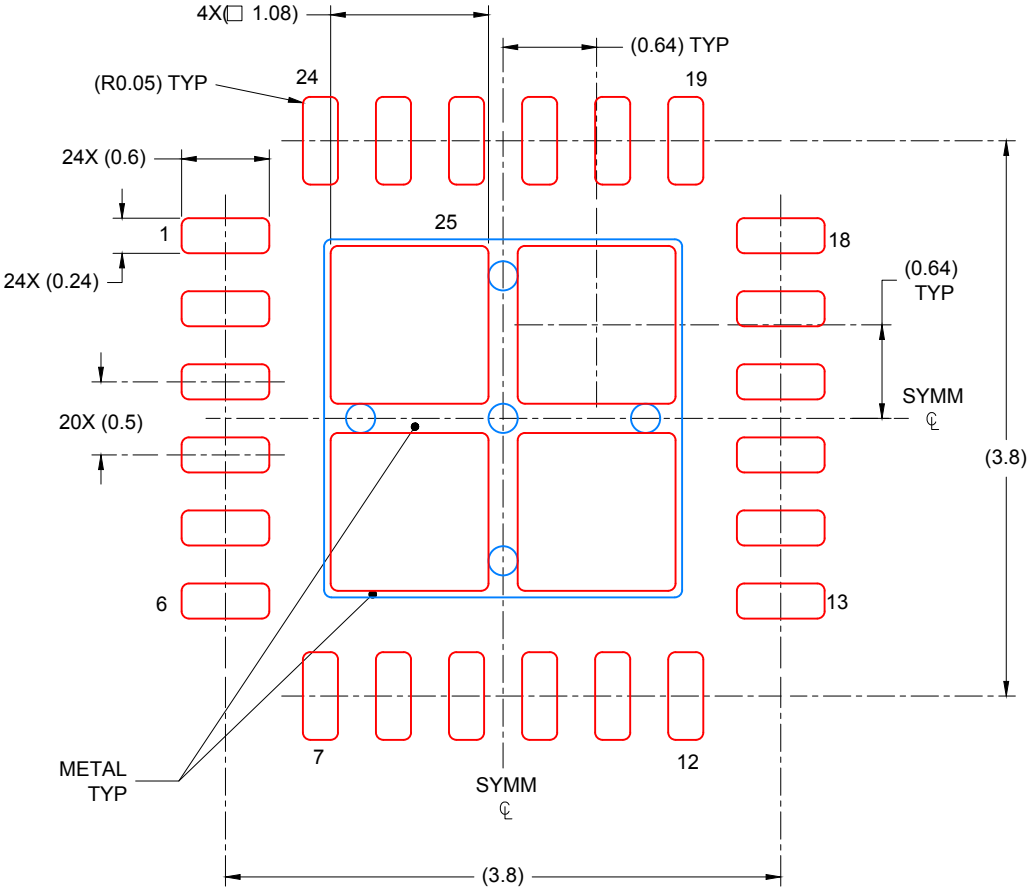

SOLDER PASTE EXAMPLE
BASED ON 0.125 mm THICK STENCIL

EXPOSED PAD 25:
78% PRINTED COVERAGE BY AREA UNDER PACKAGE
SCALE: 20X

4219135/B 11/2016

NOTES: (continued)

4. Laser cutting apertures with trapezoidal walls and rounded corners may offer better paste release. IPC-7525 may have alternate design recommendations.

IMPORTANT NOTICE AND DISCLAIMER

TI PROVIDES TECHNICAL AND RELIABILITY DATA (INCLUDING DATA SHEETS), DESIGN RESOURCES (INCLUDING REFERENCE DESIGNS), APPLICATION OR OTHER DESIGN ADVICE, WEB TOOLS, SAFETY INFORMATION, AND OTHER RESOURCES “AS IS” AND WITH ALL FAULTS, AND DISCLAIMS ALL WARRANTIES, EXPRESS AND IMPLIED, INCLUDING WITHOUT LIMITATION ANY IMPLIED WARRANTIES OF MERCHANTABILITY, FITNESS FOR A PARTICULAR PURPOSE OR NON-INFRINGEMENT OF THIRD PARTY INTELLECTUAL PROPERTY RIGHTS.

These resources are intended for skilled developers designing with TI products. You are solely responsible for (1) selecting the appropriate TI products for your application, (2) designing, validating and testing your application, and (3) ensuring your application meets applicable standards, and any other safety, security, regulatory or other requirements.

These resources are subject to change without notice. TI grants you permission to use these resources only for development of an application that uses the TI products described in the resource. Other reproduction and display of these resources is prohibited. No license is granted to any other TI intellectual property right or to any third party intellectual property right. TI disclaims responsibility for, and you will fully indemnify TI and its representatives against, any claims, damages, costs, losses, and liabilities arising out of your use of these resources.

TI’s products are provided subject to TI’s Terms of Sale or other applicable terms available either on ti.com or provided in conjunction with such TI products. TI’s provision of these resources does not expand or otherwise alter TI’s applicable warranties or warranty disclaimers for TI products.

TI objects to and rejects any additional or different terms you may have proposed.

Mailing Address: Texas Instruments, Post Office Box 655303, Dallas, Texas 75265
Copyright © 2025, Texas Instruments Incorporated