# 3-V TO 5.5-V MULTICHANNEL RS-232 LINE DRIVER/RECEIVER WITH ±15-kV ESD PROTECTION

## FEATURES

- **RS-232 Bus-Pin ESD Protection Exceeds ±15 kV Using Human-Body Model (HBM)**
- **Meets or Exceeds the Requirements of TIA/EIA-232-F and ITU v.28 Standards**
- **Operates With 3-V to 5.5-V $V_{CC}$ Supply**
- **Operates Up To 250 kbit/s**
- **Two Drivers and Two Receivers**
- **Low Supply Current . . . 300 µA Typical**
- **External Capacitors . . . 4 × 0.1 µF**
- **Accepts 5-V Logic Input With 3.3-V Supply**
- **Alternative High-Speed Pin-Compatible Device (1 Mbit/s)**
  - **SNx5C3232**

## SUPPORTS DEFENSE, AEROSPACE, AND MEDICAL APPLICATIONS

- **Controlled Baseline**
- **One Assembly/Test Site**
- **One Fabrication Site**
- **Available in Military (–55°C/125°C) Temperature Range**(1)
- **Extended Product Life Cycle**
- **Extended Product-Change Notification**
- **Product Traceability**

(1) Additional temperature ranges are available - contact factory

## APPLICATIONS

- **Battery-Powered Systems, PDAs, Notebooks, Laptops, Palmtop PCs, and Hand-Held Equipment**

**DB OR PW PACKAGE (TOP VIEW)**

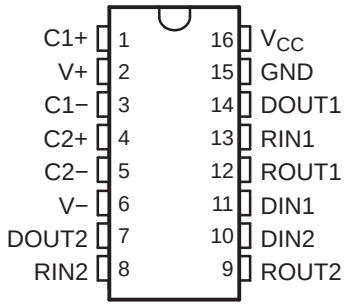


**ORDERING INFORMATION**(1)

| $T_A$ | PACKAGE(2) | | ORDERABLE PART NUMBER | TOP-SIDE MARKING |
|---|---|---|---|---|
| –55°C to 125°C | SSOP (DB) | Reel of 2000 | MAX3232MDBREP | MB3232M |
| | TSSOP(PW) | Reel of 2000 | MAX3232MPWREP | |

(1) For the most current package and ordering information, see the Package Option Addendum at the end of this document, or see the TI website at www.ti.com.
(2) Package drawings, thermal data, and symbolization are available at www.ti.com/packaging.

## DESCRIPTION

The MAX3232 device consists of two line drivers, two line receivers, and a dual charge-pump circuit with ±15-kV ESD protection pin to pin (serial-port connection pins, including GND). The device meets the requirements of TIA/EIA-232-F and provides the electrical interface between an asynchronous communication controller and the serial-port connector. The charge pump and four small external capacitors allow operation from a single 3-V to 5.5-V supply. The devices operate at data signaling rates up to 250 kbit/s and a maximum of 30-V/µs driver output slew rate.

Please be aware that an important notice concerning availability, standard warranty, and use in critical applications of Texas Instruments semiconductor products and disclaimers thereto appears at the end of this data sheet.

PRODUCTION DATA information is current as of publication date. Products conform to specifications per the terms of the Texas Instruments standard warranty. Production processing does not necessarily include testing of all parameters.

Copyright © 2006–2009, Texas Instruments Incorporated

## FUNCTION TABLE

| EACH DRIVER | | EACH RECEIVER | |
|---|---|---|---|
| INPUT DIN | OUTPUT DOUT | INPUT RIN | OUTPUT ROUT |
| L | H | L | H |
| H | L | H | L |
| | | Open | H |
| H = high level, L = low level, Open = input disconnected or connected driver off | | | |

## LOGIC DIAGRAM (POSITIVE LOGIC)

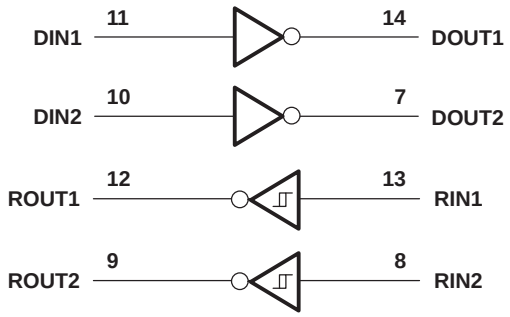


## ABSOLUTE MAXIMUM RATINGS

over operating free-air temperature range (unless otherwise noted)

| | | | VALUE | UNIT |
|---|---|---|---|---|
| $V_{CC}$ | Supply voltage range(1) | | –0.3 to 6 | V |
| V+ | Positive output supply voltage range(1) | | –0.3 to 7 | V |
| V– | Negative output supply voltage range(1) | | 0.3 to –7 | V |
| V+ – V– | Supply voltage difference(1) | | 13 | V |
| $V_I$ | Input voltage range | Drivers | –0.3 to 6 | V |
| | | Receivers | –25 to 25 | V |
| $V_O$ | Output voltage range | Drivers | –13.2 to 13.2 | V |
| | | Receivers | –0.3 to $V_{CC}$ + 0.3 | V |
| $\theta_{JA}$ | Package thermal impedance(2) | DB package | 82 | °C/W |
| | | PW package | 108 | °C/W |
| $T_J$ | Operating virtual junction temperature | | 150 | °C |
| $T_{stg}$ | Storage temperature range | | –65 to 150 | °C |

(1) All voltages are with respect to network GND.
(2) Maximum power dissipation is a function of $T_J$(max), $\theta_{JA}$, and $T_A$. The maximum allowable power dissipation at any allowable ambient temperature is $P_D = (T_J(max) – T_A)/\theta_{JA}$. Operating at the absolute maximum $T_J$ of 150°C can affect reliability.

## RECOMMENDED OPERATING CONDITIONS (see (1)and Figure 4)

| | | | | MIN | NOM | MAX | UNIT |
|---|---|---|---|---|---|---|---|
| | Supply voltage | | $V_{CC}$ = 3.3 V | 3 | 3.3 | 3.6 | V |
| | | | $V_{CC}$ = 5 V | 4.5 | 5 | 5.5 | |
| $V_{IH}$ | Driver high-level input voltage | DIN | $V_{CC}$ = 3.3 V | 2 | | | V |
| | | | $V_{CC}$ = 5 V | 2.4 | | | |
| $V_{IL}$ | Driver low-level input voltage | DIN | | | | 0.8 | V |

(1) Test conditions are C1–C4 = 0.1 µF at $V_{CC}$ = 3.3 V ±0.3 V; C1 = 0.047 µF, C2–C4 = 0.33 µF at $V_{CC}$ = 5 V ±0.5 V.


Copyright © 2006–2009, Texas Instruments Incorporated

## RECOMMENDED OPERATING CONDITIONS (see and Figure 4) (continued)

| | | | | MIN | NOM | MAX | UNIT |
|---|---|---|---|---|---|---|---|
| $V_I$ | Driver input voltage | DIN | | 0 | | 5.5 | V |
| | Receiver input voltage | | | –25 | | 25 | |
| $T_A$ | Operating free-air temperature | MAX3232M | | -55 | | 125 | °C |

## ELECTRICAL CHARACTERISTICS

over recommended ranges of supply voltage and operating free-air temperature (unless otherwise noted) (see [1]and Figure 4)

| PARAMETER | | TEST CONDITIONS | MIN | TYP[2] | MAX | UNIT |
|---|---|---|---|---|---|---|
| $I_{CC}$ | Supply current | No load, $V_{CC}$ = 3.3 V or 5 V | | 0.3 | 2 | mA |

(1) Test conditions are C1–C4 = 0.1 µF at $V_{CC}$ = 3.3 V ±0.3 V; C1 = 0.047 µF, C2–C4 = 0.33 µF at $V_{CC}$ = 5 V ±0.5 V.
(2) All typical values are at $V_{CC}$ = 3.3 V or $V_{CC}$ = 5 V, and $T_A$ = 25°C.

Copyright © 2006–2009, Texas Instruments Incorporated

## DRIVER SECTION

## ELECTRICAL CHARACTERISTICS

over recommended ranges of supply voltage and operating free-air temperature (unless otherwise noted) (see [1] and Figure 4)

| PARAMETER | | TEST CONDITIONS | | MIN | TYP[2] | MAX | UNIT |
|---|---|---|---|---|---|---|---|
| $V_{OH}$ | High-level output voltage | DOUT at $R_L$ = 3 kΩ to GND, | DIN = GND | 5 | 5.4 | | V |
| $V_{OL}$ | Low-level output voltage | DOUT at $R_L$ = 3 kΩ to GND, | DIN = $V_{CC}$ | –5 | –5.4 | | V |
| $I_{IH}$ | High-level input current | $V_I = V_{CC}$ | | | ±0.01 | ±1 | µA |
| $I_{IL}$ | Low-level input current | $V_I$ at GND | | | ±0.01 | ±1 | µA |
| $I_{OS}$[3] | Short-circuit output current | $V_{CC}$ = 3.6 V, | $V_O$ = 0 V | | ±35 | ±60 | mA |
| | | $V_{CC}$ = 5.5 V, | $V_O$ = 0 V | | | | |
| $r_o$ | Output resistance | $V_{CC}$, V+, and V– = 0 V, | $V_O$ = ±2 V | 300 | 10M | | Ω |

(1) Test conditions are C1–C4 = 0.1 µF at $V_{CC}$ = 3.3 V ±0.3 V; C1 = 0.047 µF, C2–C4 = 0.33 µF at $V_{CC}$ = 5 V ±0.5 V.
(2) All typical values are at $V_{CC}$ = 3.3 V or $V_{CC}$ = 5 V, and $T_A$ = 25°C.
(3) Short-circuit durations should be controlled to prevent exceeding the device absolute power dissipation ratings, and not more than one output should be shorted at a time.

## SWITCHING CHARACTERISTICS

over recommended ranges of supply voltage and operating free-air temperature (unless otherwise noted) (see [1] and Figure 4)

| PARAMETER | | TEST CONDITIONS | | MIN | TYP[2] | MAX | UNIT |
|---|---|---|---|---|---|---|---|
| | Maximum data rate | $C_L$ = 1000 pF, One DOUT switching, | $R_L$ = 3 kΩ, See Figure 1 | 150 | 250 | | kbit/s |
| $t_{sk(p)}$ | Pulse skew[1] | CL = 150 pF to 2500 pF | $R_L$ = 3 kΩ to 7 kΩ, See Figure 2 | | 300 | | ns |
| SR(tr) | Slew rate, transition region (see Figure 1) | RL = 3 kΩ to 7 kΩ, $V_{CC}$ = 3.3 V | $C_L$ = 150 pF to 1000 pF | 6 | | 30 | V/µs |
| | | | $C_L$ = 150 pF to 2500 pF | 4 | | 30 | |

(1) Short-circuit durations should be controlled to prevent exceeding the device absolute power dissipation ratings, and not more than one output should be shorted at a time.
(2) All typical values are at $V_{CC}$ = 3.3 V or $V_{CC}$ = 5 V, and $T_A$ = 25°C.


Copyright © 2006–2009, Texas Instruments Incorporated

## RECEIVER SECTION

## ELECTRICAL CHARACTERISTICS

over recommended ranges of supply voltage and operating free-air temperature (unless otherwise noted (see [1]and Figure 4)

| PARAMETER | | TEST CONDITIONS | MIN | TYP[2] | MAX | UNIT |
|---|---|---|---|---|---|---|
| $V_{OH}$ | High-level output voltage | $I_{OH}$ = -1 mA | $V_{CC}$–0.6 | $V_{CC}$–0.1 | | V |
| $V_{OL}$ | Low-level output voltage | $I_{OL}$ = 1.6 mA | | | 0.4 | V |
| $V_{IT+}$ | Positive-going input threshold voltage | $V_{CC}$ = 3.3 V | | 1.5 | 2.4 | V |
| | | $V_{CC}$ = 5 V | | 1.8 | 2.4 | |
| $V_{IT-}$ | Negative-going input threshold voltage | $V_{CC}$ = 3.3 V | 0.6 | 1.2 | | V |
| | | $V_{CC}$ = 5 V | 0.8 | 1.5 | | |
| $V_{hys}$ | Input hysteresis ($V_{IT+}$ – $V_{IT-}$) | | | 0.3 | | V |
| $r_i$ | Input resistance | $V_I$ = ±3 V to ±25 V | 3 | 5 | 8 | kΩ |

(1) Test conditions are C1–C4 = 0.1 µF at $V_{CC}$ = 3.3 V ±0.3 V; C1 = 0.047 µF, C2–C4 = 0.33 µF at $V_{CC}$ = 5 V ±0.5 V.
(2) All typical values are at $V_{CC}$ = 3.3 V or $V_{CC}$ = 5 V and $T_A$ = 25°C.

## SWITCHING CHARACTERISTICS

over recommended ranges of supply voltage and operating free-air temperature (unless otherwise noted (see [1]and Figure 3)

| PARAMETER | | TEST CONDITIONS | MIN | TYP[2] | MAX | UNIT |
|---|---|---|---|---|---|---|
| $t_{PLH}$ | Propagation delay time, low- to high-level output | $C_L$ = 150 pF | | 300 | | ns |
| $t_{PHL}$ | Propagation delay time, high- to low-level output | | | 300 | | ns |
| $t_{sk(p)}$ | Pulse skew[3] | | | 300 | | ns |

(1) Test conditions are C1–C4 = 0.1 µF at $V_{CC}$ = 3.3 V ±0.3 V; C1 = 0.047 µF, C2–C4 = 0.33 µF at $V_{CC}$ = 5 V ±0.5 V.
(2) All typical values are at $V_{CC}$ = 3.3 V or $V_{CC}$ = 5 V and $T_A$ = 25°C.
(3) Pulse skew is defined as $|t_{PLH} – t_{PHL}|$ of each channel of the same device.

## PARMETER MEASUREMENT INFORMATION

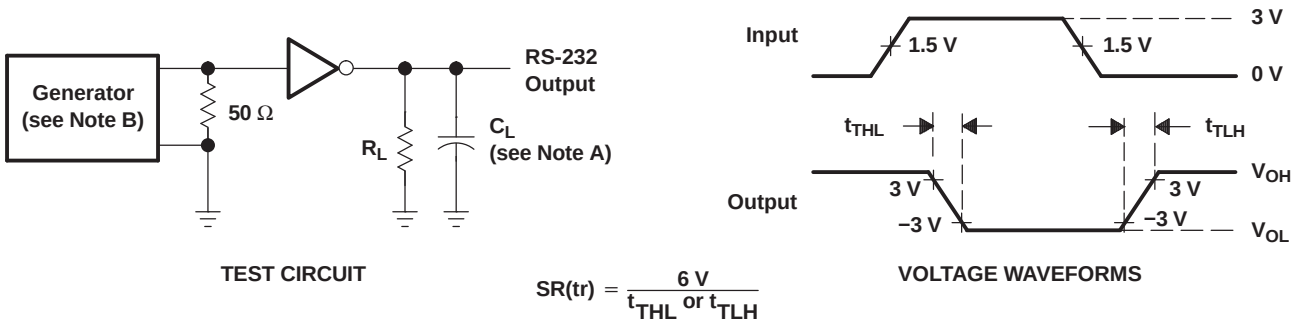


$$SR(tr) = \frac{6\ V}{t_{THL}\ or\ t_{TLH}}$$

**Figure 1. Driver Slew Rate**

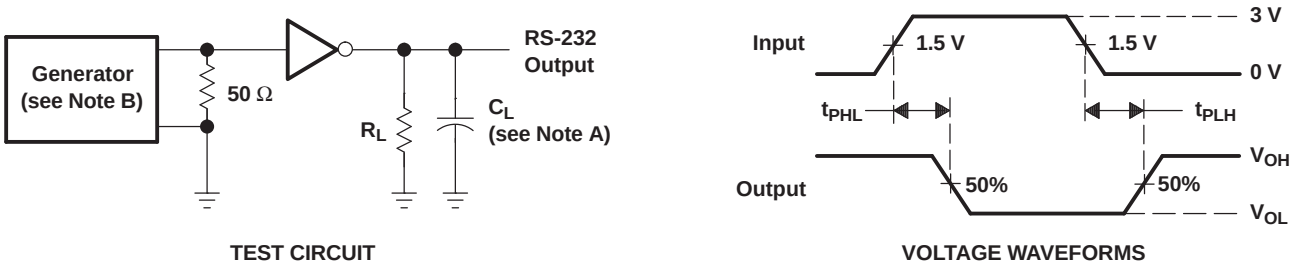


A. $C_L$ includes probe and jig capacitance.
B. The pulse generator has the following characteristics: $Z_O$ = 50 Ω, 50% duty cycle, tr ≤ 10 ns, tf ≤ 10 ns.

**Figure 2. Driver Pulse Skew**

## PARMETER MEASUREMENT INFORMATION (continued)

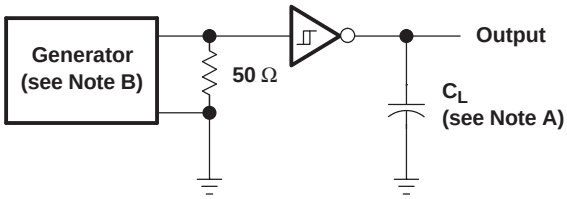


TEST CIRCUIT

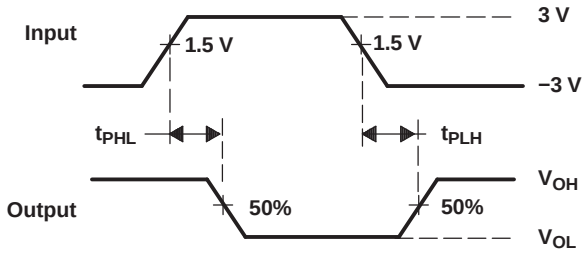


VOLTAGE WAVEFORMS

A. $C_L$ includes probe and jig capacitance.

B. The pulse generator has the following characteristics: $Z_O$ = 50 Ω, 50% duty cycle, tr ≤ 10 ns, tf ≤ 10 ns.

**Figure 3. Receiver Propagation Delay Times**


Copyright © 2006–2009, Texas Instruments Incorporated

## APPLICATION INFORMATION

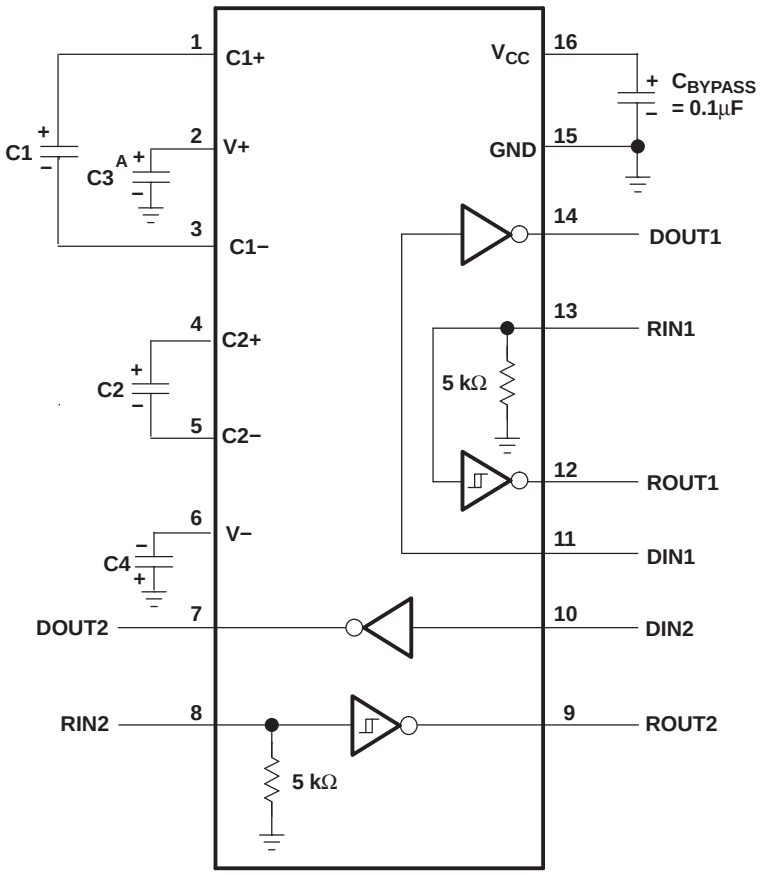


**$V_{CC}$ vs CAPACITOR VALUES**

| $V_{CC}$ | C1 | C2, C3, C4 |
|---|---|---|
| 3.3 V ± 0.3 V | 0.1 µF | 0.1 µF |
| 5 V ± 0.5 V | 0.047 µF | 0.33 µF |
| 3 V to 5.5 V | 0.1 µF | 0.47 µF |

A. C3 can be connected to $V_{CC}$ or GND.

B. Resistor values shown are nominal.

C. Nonpolarized ceramic capacitros are acceptable. If polarized tantalum or electrolytic capacitors are used, they should be connected as shown.

**Figure 4. Typical Operating Circuit and Capacitor Values**

Copyright © 2006–2009, Texas Instruments Incorporated

## PACKAGING INFORMATION

| Orderable part number | Status (1) | Material type (2) | Package \| Pins | Package qty \| Carrier | RoHS (3) | Lead finish/ Ball material (4) | MSL rating/ Peak reflow (5) | Op temp (°C) | Part marking (6) |
|---|---|---|---|---|---|---|---|---|---|
| MAX3232MDBREP | Active | Production | SSOP (DB) \| 16 | 2000 \| LARGE T&R | Yes | NIPDAU | Level-1-260C-UNLIM | -55 to 125 | MB3232M |
| MAX3232MDBREP.A | Active | Production | SSOP (DB) \| 16 | 2000 \| LARGE T&R | Yes | NIPDAU | Level-1-260C-UNLIM | -55 to 125 | MB3232M |
| MAX3232MPWREP | Active | Production | TSSOP (PW) \| 16 | 2000 \| LARGE T&R | Yes | NIPDAU | Level-1-260C-UNLIM | -55 to 125 | MB3232M |
| MAX3232MPWREP.A | Active | Production | TSSOP (PW) \| 16 | 2000 \| LARGE T&R | Yes | NIPDAU | Level-1-260C-UNLIM | -55 to 125 | MB3232M |
| V62/06623-01XE | Active | Production | SSOP (DB) \| 16 | 2000 \| LARGE T&R | Yes | NIPDAU | Level-1-260C-UNLIM | -55 to 125 | MB3232M |
| V62/06623-01YE | Active | Production | TSSOP (PW) \| 16 | 2000 \| LARGE T&R | Yes | NIPDAU | Level-1-260C-UNLIM | -55 to 125 | MB3232M |

(1) **Status:** For more details on status, see our product life cycle.

(2) **Material type:** When designated, preproduction parts are prototypes/experimental devices, and are not yet approved or released for full production. Testing and final process, including without limitation quality assurance, reliability performance testing, and/or process qualification, may not yet be complete, and this item is subject to further changes or possible discontinuation. If available for ordering, purchases will be subject to an additional waiver at checkout, and are intended for early internal evaluation purposes only. These items are sold without warranties of any kind.

(3) **RoHS values:** Yes, No, RoHS Exempt. See the TI RoHS Statement for additional information and value definition.

(4) **Lead finish/Ball material:** Parts may have multiple material finish options. Finish options are separated by a vertical ruled line. Lead finish/Ball material values may wrap to two lines if the finish value exceeds the maximum column width.

(5) **MSL rating/Peak reflow:** The moisture sensitivity level ratings and peak solder (reflow) temperatures. In the event that a part has multiple moisture sensitivity ratings, only the lowest level per JEDEC standards is shown. Refer to the shipping label for the actual reflow temperature that will be used to mount the part to the printed circuit board.

(6) **Part marking:** There may be an additional marking, which relates to the logo, the lot trace code information, or the environmental category of the part.

Multiple part markings will be inside parentheses. Only one part marking contained in parentheses and separated by a "~" will appear on a part. If a line is indented then it is a continuation of the previous line and the two combined represent the entire part marking for that device.

**Important Information and Disclaimer:**The information provided on this page represents TI's knowledge and belief as of the date that it is provided. TI bases its knowledge and belief on information provided by third parties, and makes no representation or warranty as to the accuracy of such information. Efforts are underway to better integrate information from third parties. TI has taken and continues to take reasonable steps to provide representative and accurate information but may not have conducted destructive testing or chemical analysis on incoming materials and chemicals. TI and TI suppliers consider certain information to be proprietary, and thus CAS numbers and other limited information may not be available for release.

In no event shall TI's liability arising out of such information exceed the total purchase price of the TI part(s) at issue in this document sold by TI to Customer on an annual basis.

**OTHER QUALIFIED VERSIONS OF MAX3232-EP :**

- Catalog : MAX3232

NOTE: Qualified Version Definitions:

- Catalog - TI's standard catalog product

## TAPE AND REEL INFORMATION

**REEL DIMENSIONS**

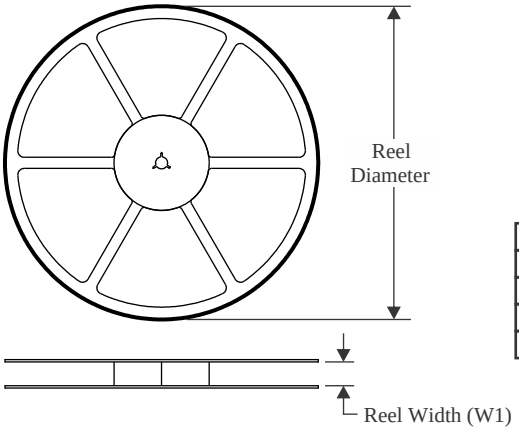


**TAPE DIMENSIONS**

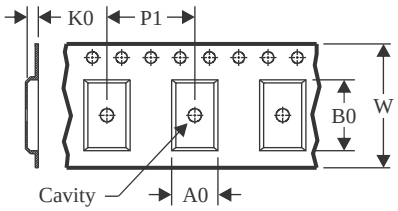


| | |
|---|---|
| A0 | Dimension designed to accommodate the component width |
| B0 | Dimension designed to accommodate the component length |
| K0 | Dimension designed to accommodate the component thickness |
| W | Overall width of the carrier tape |
| P1 | Pitch between successive cavity centers |

**QUADRANT ASSIGNMENTS FOR PIN 1 ORIENTATION IN TAPE**

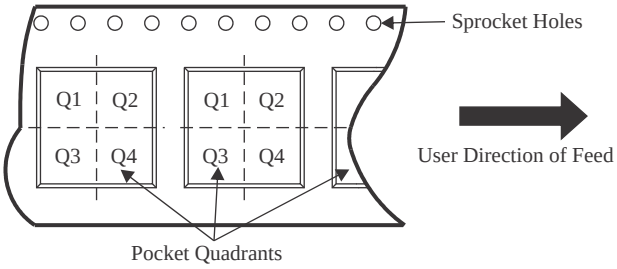


*All dimensions are nominal

| Device | Package Type | Package Drawing | Pins | SPQ | Reel Diameter (mm) | Reel Width W1 (mm) | A0 (mm) | B0 (mm) | K0 (mm) | P1 (mm) | W (mm) | Pin1 Quadrant |
|---|---|---|---|---|---|---|---|---|---|---|---|---|
| MAX3232MDBREP | SSOP | DB | 16 | 2000 | 330.0 | 16.4 | 8.35 | 6.6 | 2.4 | 12.0 | 16.0 | Q1 |
| MAX3232MPWREP | TSSOP | PW | 16 | 2000 | 330.0 | 12.4 | 6.9 | 5.6 | 1.6 | 8.0 | 12.0 | Q1 |

TAPE AND REEL BOX DIMENSIONS

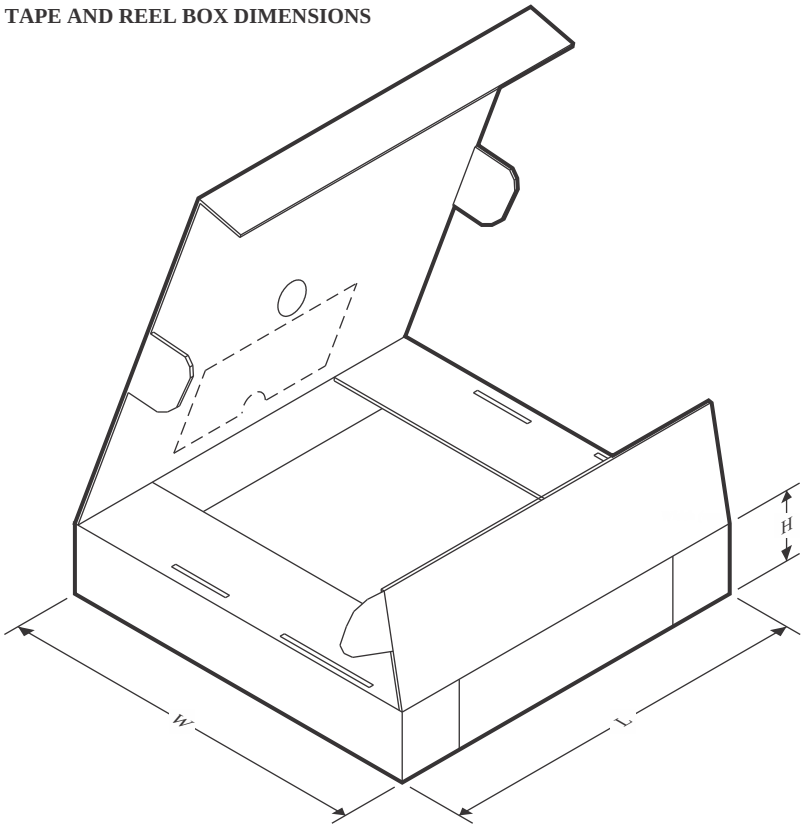


*All dimensions are nominal

| Device | Package Type | Package Drawing | Pins | SPQ | Length (mm) | Width (mm) | Height (mm) |
|---|---|---|---|---|---|---|---|
| MAX3232MDBREP | SSOP | DB | 16 | 2000 | 367.0 | 367.0 | 38.0 |
| MAX3232MPWREP | TSSOP | PW | 16 | 2000 | 356.0 | 356.0 | 35.0 |

# PW0016A

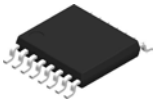

# PACKAGE OUTLINE

## TSSOP - 1.2 mm max height

SMALL OUTLINE PACKAGE

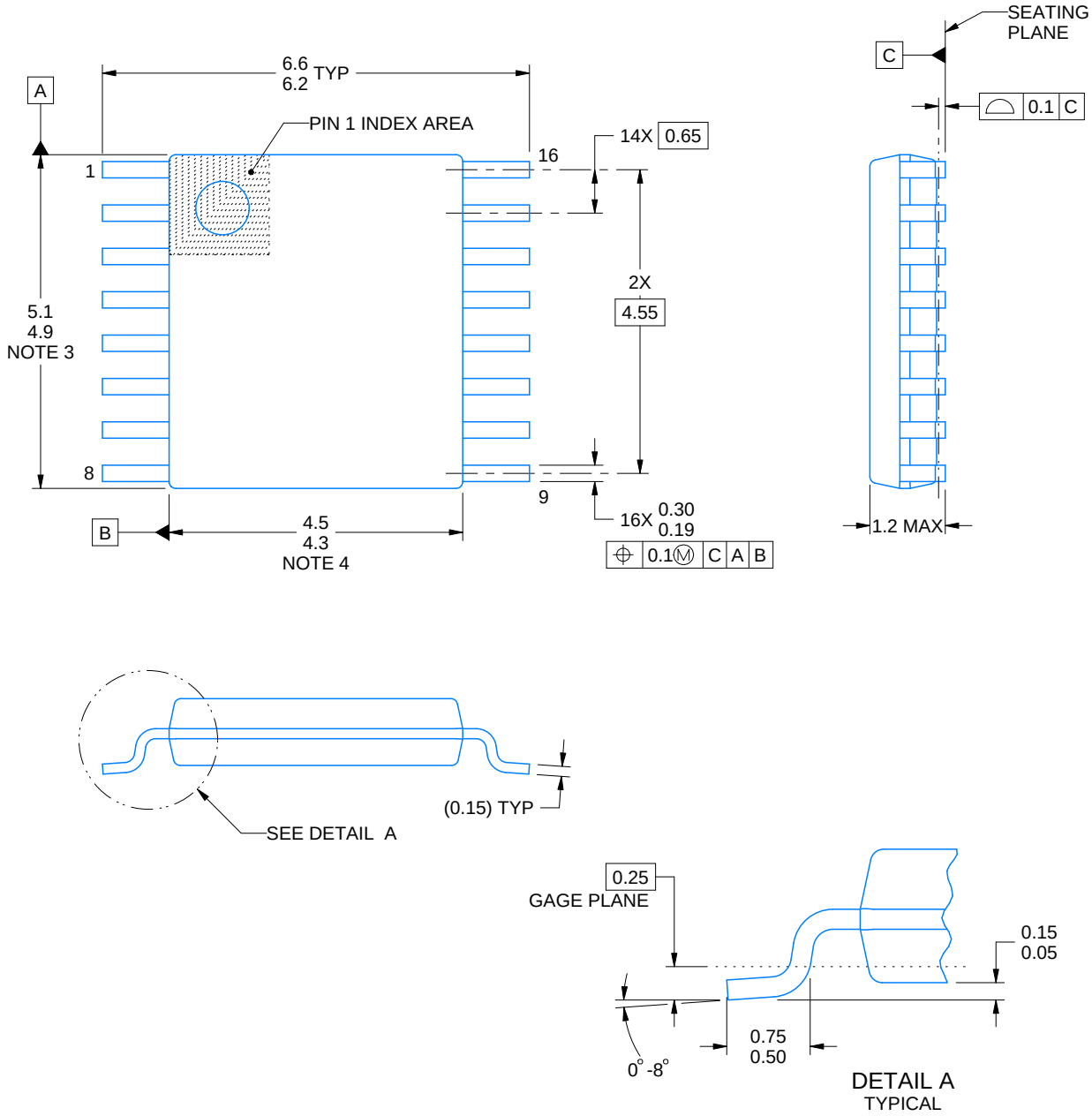


NOTES:

1. All linear dimensions are in millimeters. Any dimensions in parenthesis are for reference only. Dimensioning and tolerancing per ASME Y14.5M.
2. This drawing is subject to change without notice.
3. This dimension does not include mold flash, protrusions, or gate burrs. Mold flash, protrusions, or gate burrs shall not exceed 0.15 mm per side.
4. This dimension does not include interlead flash. Interlead flash shall not exceed 0.25 mm per side.
5. Reference JEDEC registration MO-153.

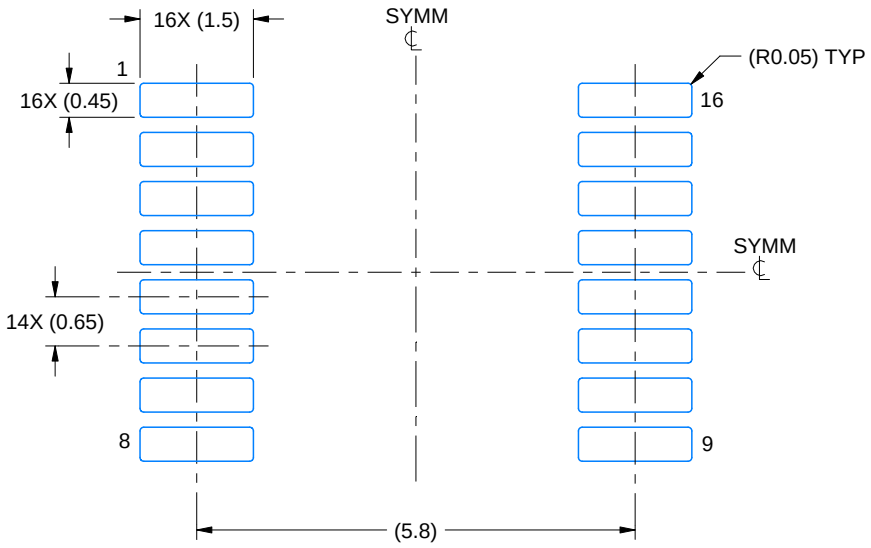


LAND PATTERN EXAMPLE
EXPOSED METAL SHOWN
SCALE: 10X

NON-SOLDER MASK DEFINED (PREFERRED)

SOLDER MASK DEFINED

SOLDER MASK DETAILS

4220204/A 02/2017

NOTES: (continued)

6. Publication IPC-7351 may have alternate designs.
7. Solder mask tolerances between and around signal pads can vary based on board fabrication site.

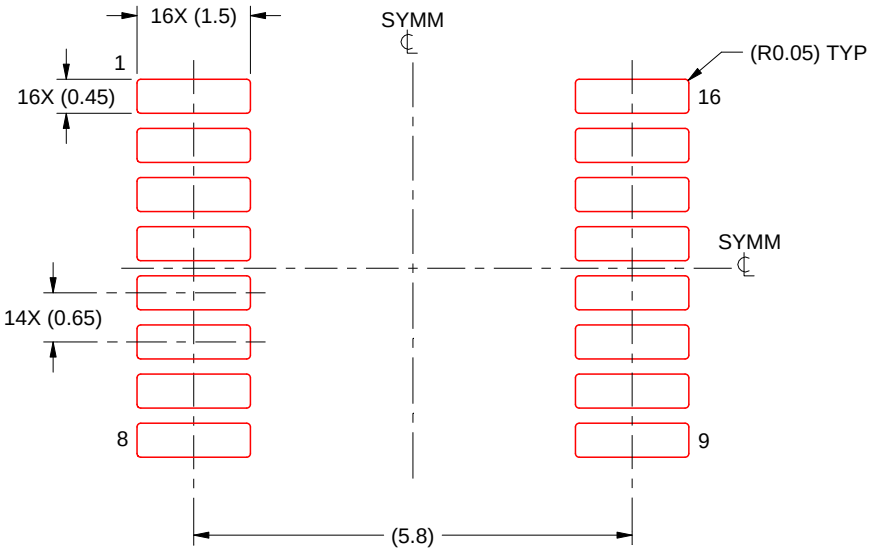


SOLDER PASTE EXAMPLE
BASED ON 0.125 mm THICK STENCIL
SCALE: 10X

4220204/A 02/2017

NOTES: (continued)

8. Laser cutting apertures with trapezoidal walls and rounded corners may offer better paste release. IPC-7525 may have alternate design recommendations.
9. Board assembly site may have different recommendations for stencil design.

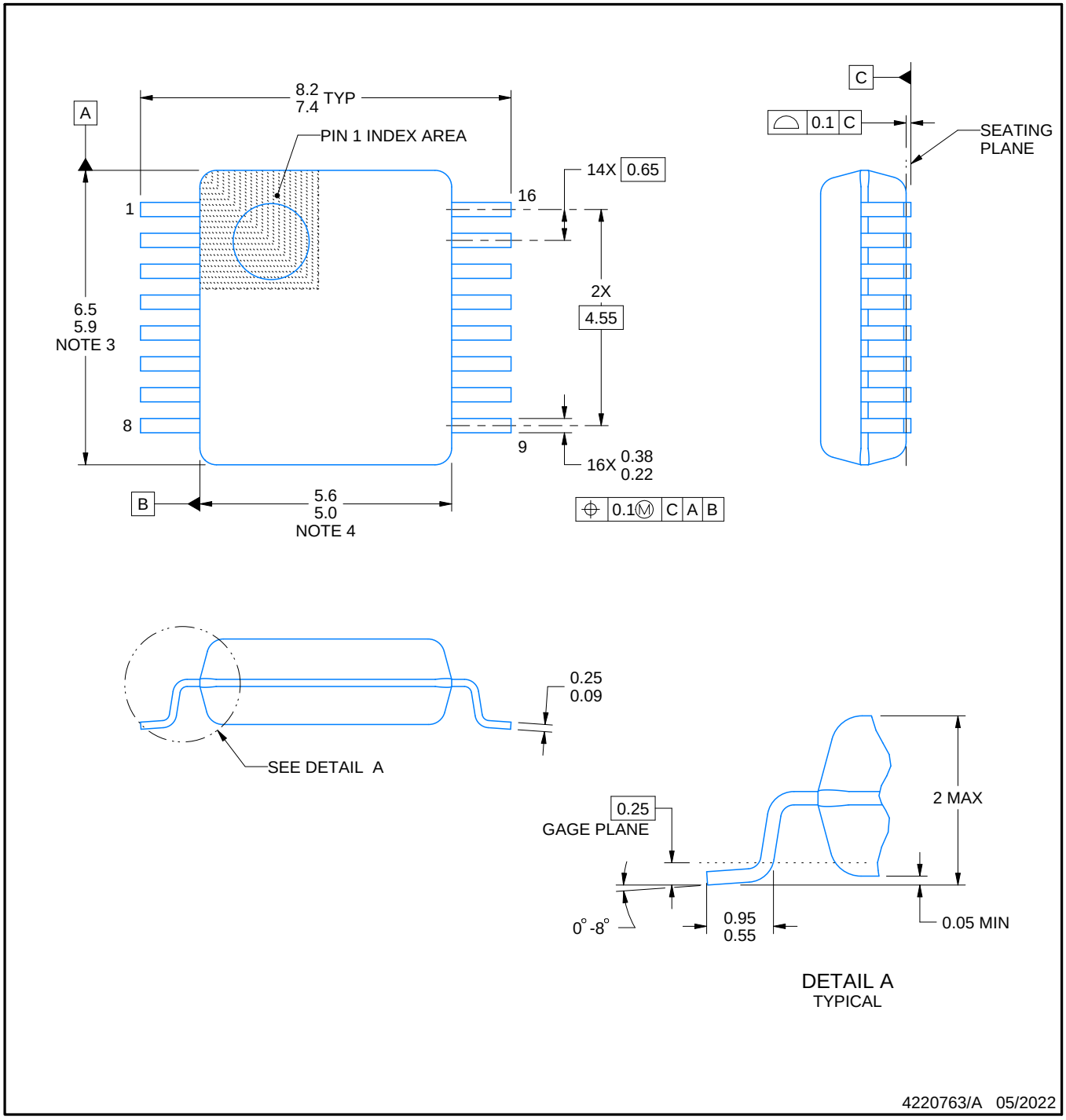


NOTES:

1. All linear dimensions are in millimeters. Any dimensions in parenthesis are for reference only. Dimensioning and tolerancing per ASME Y14.5M.
2. This drawing is subject to change without notice.
3. This dimension does not include mold flash, protrusions, or gate burrs. Mold flash, protrusions, or gate burrs shall not exceed 0.15 mm per side.
4. Reference JEDEC registration MO-150.

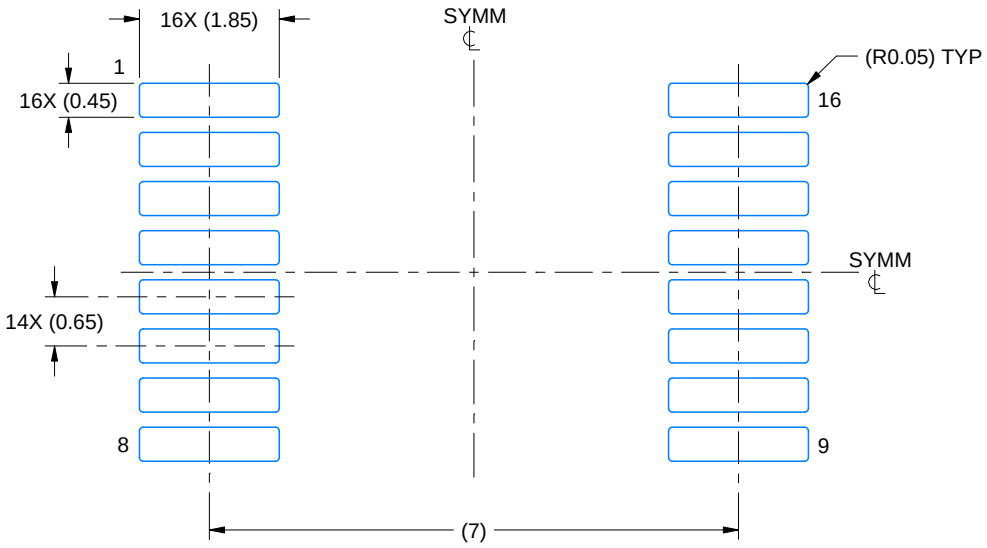


LAND PATTERN EXAMPLE
EXPOSED METAL SHOWN
SCALE: 10X

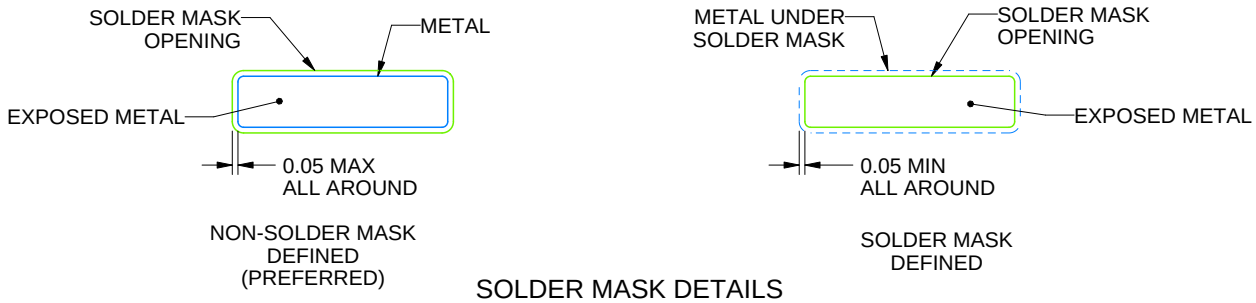


SOLDER MASK DETAILS

4220763/A 05/2022

NOTES: (continued)

5. Publication IPC-7351 may have alternate designs.
6. Solder mask tolerances between and around signal pads can vary based on board fabrication site.

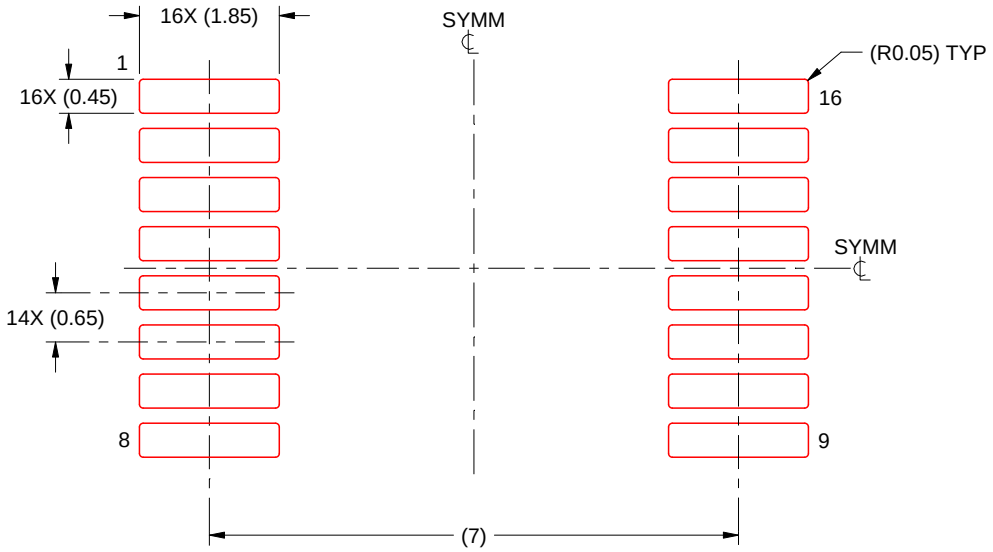


SOLDER PASTE EXAMPLE
BASED ON 0.125 mm THICK STENCIL
SCALE: 10X

4220763/A 05/2022

NOTES: (continued)

7. Laser cutting apertures with trapezoidal walls and rounded corners may offer better paste release. IPC-7525 may have alternate design recommendations.
8. Board assembly site may have different recommendations for stencil design.

# IMPORTANT NOTICE AND DISCLAIMER

TI PROVIDES TECHNICAL AND RELIABILITY DATA (INCLUDING DATA SHEETS), DESIGN RESOURCES (INCLUDING REFERENCE DESIGNS), APPLICATION OR OTHER DESIGN ADVICE, WEB TOOLS, SAFETY INFORMATION, AND OTHER RESOURCES “AS IS” AND WITH ALL FAULTS, AND DISCLAIMS ALL WARRANTIES, EXPRESS AND IMPLIED, INCLUDING WITHOUT LIMITATION ANY IMPLIED WARRANTIES OF MERCHANTABILITY, FITNESS FOR A PARTICULAR PURPOSE OR NON-INFRINGEMENT OF THIRD PARTY INTELLECTUAL PROPERTY RIGHTS.

These resources are intended for skilled developers designing with TI products. You are solely responsible for (1) selecting the appropriate TI products for your application, (2) designing, validating and testing your application, and (3) ensuring your application meets applicable standards, and any other safety, security, regulatory or other requirements.

These resources are subject to change without notice. TI grants you permission to use these resources only for development of an application that uses the TI products described in the resource. Other reproduction and display of these resources is prohibited. No license is granted to any other TI intellectual property right or to any third party intellectual property right. TI disclaims responsibility for, and you will fully indemnify TI and its representatives against, any claims, damages, costs, losses, and liabilities arising out of your use of these resources.

TI’s products are provided subject to TI’s Terms of Sale or other applicable terms available either on ti.com or provided in conjunction with such TI products. TI’s provision of these resources does not expand or otherwise alter TI’s applicable warranties or warranty disclaimers for TI products.

TI objects to and rejects any additional or different terms you may have proposed.

Mailing Address: Texas Instruments, Post Office Box 655303, Dallas, Texas 75265
Copyright © 2025, Texas Instruments Incorporated