## FEATURES

- **Operates From 1.65 V to 3.6 V**
- **Inputs Accept Voltages to 5.5 V**
- **Max $t_{pd}$ of 7 ns at 3.3 V**
- **Typical $V_{OLP}$ (Output Ground Bounce) <0.8 V at $V_{CC}$ = 3.3 V, $T_A$ = 25°C**
- **Typical $V_{OHV}$ (Output $V_{OH}$ Undershoot) >2 V at $V_{CC}$ = 3.3 V, $T_A$ = 25°C**
- **Supports Mixed-Mode Signal Operation on All Ports (5-V Input/Output Voltage With 3.3-V $V_{CC}$)**
- **$I_{off}$ Supports Partial-Power-Down Mode Operation**
- **Latch-Up Performance Exceeds 250 mA Per JESD 17**

**DB, DW, OR PW PACKAGE**
**(TOP VIEW)**

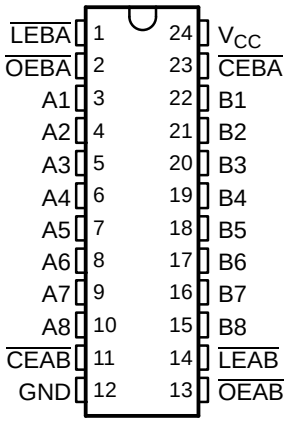


## DESCRIPTION/ORDERING INFORMATION

This octal registered transceiver is designed for 1.65-V to 3.6-V $V_{CC}$ operation.

The SN74LVC543A contains two sets of D-type latches for temporary storage of data flowing in either direction. Separate latch-enable ($\overline{LEAB}$ or $\overline{LEBA}$) and output-enable ($\overline{OEAB}$ or $\overline{OEBA}$) inputs are provided for each register to permit independent control in either direction of data flow.

The A-to-B enable ($\overline{CEAB}$) input must be low to enter data from A or to output data from B. If $\overline{CEAB}$ is low and $\overline{LEAB}$ is low, the A-to-B latches are transparent; a subsequent low-to-high transition of $\overline{LEAB}$ places the A latches in the storage mode. With $\overline{CEAB}$ and $\overline{OEAB}$ both low, the 3-state B outputs are active and reflect the data present at the output of the A latches. Data flow for B to A is similar to that of A to B, but uses $\overline{CEBA}$, $\overline{LEBA}$, and $\overline{OEBA}$.

This device is fully specified for partial-power-down applications using $I_{off}$. The $I_{off}$ circuitry disables the outputs, preventing damaging current backflow through the device when it is powered down.

To ensure the high-impedance state during power up or power down, $\overline{OE}$ should be tied to $V_{CC}$ through a pullup resistor; the minimum value of the resistor is determined by the current-sinking capability of the driver.

Inputs can be driven from either 3.3-V or 5-V devices. This feature allows the use of these devices as translators in a mixed 3.3-V/5-V system environment.

### ORDERING INFORMATION

| $T_A$ | PACKAGE(1) | | ORDERABLE PART NUMBER | TOP-SIDE MARKING |
|---|---|---|---|---|
| –40°C to 85°C | SOIC – DW | Tube of 25 | SN74LVC543ADW | LVC543A |
| | | Reel of 2000 | SN74LVC543ADWR | |
| | SSOP – DB | Reel of 2000 | SN74LVC543ADBR | LC543A |
| | TSSOP – PW | Tube of 60 | SN74LVC543APW | LC543A |
| | | Reel of 2000 | SN74LVC543APWR | |
| | | Reel of 250 | SN74LVC543APWT | |

(1) Package drawings, standard packing quantities, thermal data, symbolization, and PCB design guidelines are available at www.ti.com/sc/package.

Please be aware that an important notice concerning availability, standard warranty, and use in critical applications of Texas Instruments semiconductor products and disclaimers thereto appears at the end of this data sheet.

PRODUCTION DATA information is current as of publication date. Products conform to specifications per the terms of the Texas Instruments standard warranty. Production processing does not necessarily include testing of all parameters.

Copyright © 1993–2005, Texas Instruments Incorporated

## FUNCTION TABLE[1]

| INPUTS | | | | OUTPUT B |
|---|---|---|---|---|
| $\overline{CEAB}$ | $\overline{LEAB}$ | $\overline{OEAB}$ | A | |
| H | X | X | X | Z |
| X | X | H | X | Z |
| L | H | L | X | $B_0$[2] |
| L | L | L | L | L |
| L | L | L | H | H |

(1) A-to-B data flow is shown; B-to-A flow control is the same, except that it uses $\overline{CEBA}$, $\overline{LEBA}$, and $\overline{OEBA}$.
(2) Output level before the indicated steady-state input conditions were established

## LOGIC DIAGRAM (POSITIVE LOGIC)

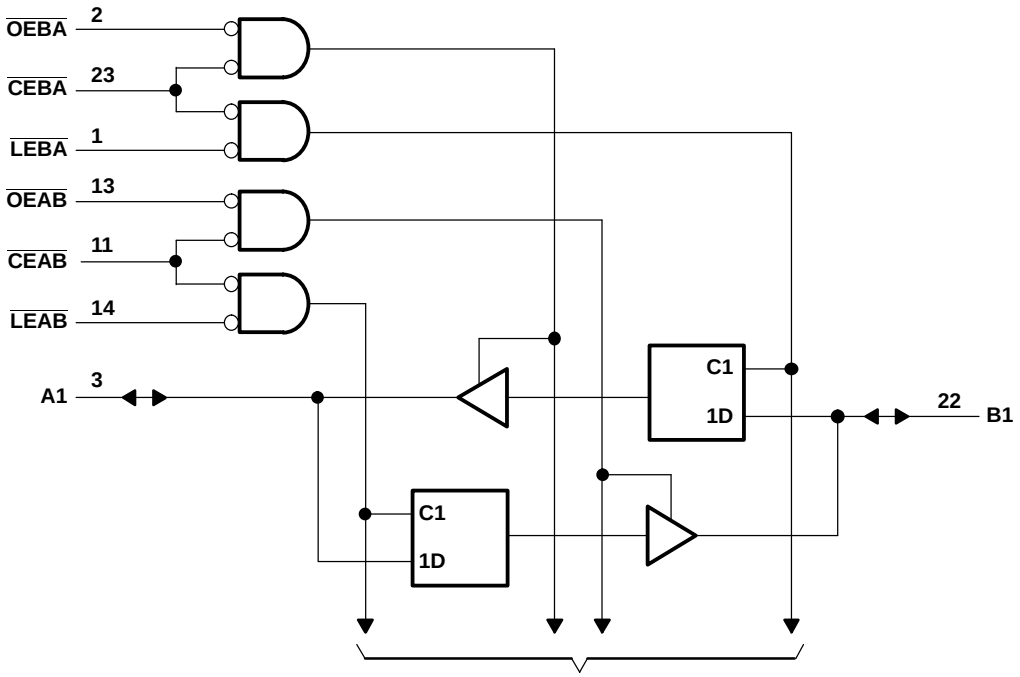

## Absolute Maximum Ratings[1]

over operating free-air temperature range (unless otherwise noted)

| | | | MIN | MAX | UNIT |
|---|---|---|---|---|---|
| $V_{CC}$ | Supply voltage range | | –0.5 | 6.5 | V |
| $V_I$ | Input voltage range[2] | | –0.5 | 6.5 | V |
| $V_O$ | Voltage range applied to any output in the high-impedance or power-off state[2] | | –0.5 | 6.5 | V |
| $V_O$ | Voltage range applied to any output in the high or low state[2][3] | | –0.5 | $V_{CC}$ + 0.5 | V |
| $I_{IK}$ | Input clamp current | $V_I < 0$ | | –50 | mA |
| $I_{OK}$ | Output clamp current | $V_O < 0$ | | –50 | mA |
| $I_O$ | Continuous output current | | | ±50 | mA |
| | Continuous current through $V_{CC}$ or GND | | | ±100 | mA |
| $\theta_{JA}$ | Package thermal impedance[4] | DB package | | 63 | °C/W |
| | | DW package | | 46 | |
| | | PW package | | 88 | |
| $T_{stg}$ | Storage temperature range | | –65 | 150 | °C |

(1) Stresses beyond those listed under "absolute maximum ratings" may cause permanent damage to the device. These are stress ratings only, and functional operation of the device at these or any other conditions beyond those indicated under "recommended operating conditions" is not implied. Exposure to absolute-maximum-rated conditions for extended periods may affect device reliability.
(2) The input negative-voltage and output voltage ratings may be exceeded if the input and output current ratings are observed.
(3) The value of $V_{CC}$ is provided in the recommended operating conditions table.
(4) The package thermal impedance is calculated in accordance with JESD 51-7.

## Recommended Operating Conditions[1]

| | | | MIN | MAX | UNIT |
|---|---|---|---|---|---|
| $V_{CC}$ | Supply voltage | Operating | 1.65 | 3.6 | V |
| | | Data retention only | 1.5 | | |
| $V_{IH}$ | High-level input voltage | $V_{CC}$ = 1.65 V to 1.95 V | 0.65 × $V_{CC}$ | | V |
| | | $V_{CC}$ = 2.3 V to 2.7 V | 1.7 | | |
| | | $V_{CC}$ = 2.7 V to 3.6 V | 2 | | |
| $V_{IL}$ | Low-level input voltage | $V_{CC}$ = 1.65 V to 1.95 V | | 0.35 × $V_{CC}$ | V |
| | | $V_{CC}$ = 2.3 V to 2.7 V | | 0.7 | |
| | | $V_{CC}$ = 2.7 V to 3.6 V | | 0.8 | |
| $V_I$ | Input voltage | | 0 | 5.5 | V |
| $V_O$ | Output voltage | High or low state | 0 | $V_{CC}$ | V |
| | | 3-state | 0 | 5.5 | |
| $I_{OH}$ | High-level output current | $V_{CC}$ = 1.65 V | | –4 | mA |
| | | $V_{CC}$ = 2.3 V | | –8 | |
| | | $V_{CC}$ = 2.7 V | | –12 | |
| | | $V_{CC}$ = 3 V | | –24 | |
| $I_{OL}$ | Low-level output current | $V_{CC}$ = 1.65 V | | 4 | mA |
| | | $V_{CC}$ = 2.3 V | | 8 | |
| | | $V_{CC}$ = 2.7 V | | 12 | |
| | | $V_{CC}$ = 3 V | | 24 | |
| $\Delta t/\Delta v$ | Input transition rise or fall rate | | | 10 | ns/V |
| $T_A$ | Operating free-air temperature | | –40 | 85 | °C |

(1) All unused inputs of the device must be held at $V_{CC}$ or GND to ensure proper device operation. Refer to the TI application report, *Implications of Slow or Floating CMOS Inputs*, literature number SCBA004.

## Electrical Characteristics

over recommended operating free-air temperature range (unless otherwise noted)

| PARAMETER | | TEST CONDITIONS | | $V_{CC}$ | MIN | TYP(1) | MAX | UNIT |
|---|---|---|---|---|---|---|---|---|
| $V_{OH}$ | | $I_{OH}$ = –100 µA | | 1.65 V to 3.6 V | $V_{CC}$ – 0.2 | | | V |
| | | $I_{OH}$ = –4 mA | | 1.65 V | 1.2 | | | |
| | | $I_{OH}$ = –8 mA | | 2.3 V | 1.7 | | | |
| | | $I_{OH}$ = –12 mA | | 2.7 V | 2.2 | | | |
| | | | | 3 V | 2.4 | | | |
| | | $I_{OH}$ = –24 mA | | 3 V | 2.2 | | | |
| $V_{OL}$ | | $I_{OL}$ = 100 µA | | 1.65 V to 3.6 V | | | 0.2 | V |
| | | $I_{OL}$ = 4 mA | | 1.65 V | | | 0.45 | |
| | | $I_{OL}$ = 8 mA | | 2.3 V | | | 0.7 | |
| | | $I_{OL}$ = 12 mA | | 2.7 V | | | 0.4 | |
| | | $I_{OL}$ = 24 mA | | 3 V | | | 0.55 | |
| $I_I$ | Control inputs | $V_I$ = 0 to 5.5 V | | 3.6 V | | | ±5 | µA |
| $I_{off}$ | | $V_I$ or $V_O$ = 5.5 V | | 0 | | | ±10 | µA |
| $I_{OZ}$(2) | | $V_O$ = 0 to 5.5 V | | 3.6 V | | | ±10 | µA |
| $I_{CC}$ | | $V_I$ = $V_{CC}$ or GND | $I_O$ = 0 | 3.6 V | | | 10 | µA |
| | | 3.6 V ≤ $V_I$ ≤ 5.5 V(3) | | | | | 10 | |
| $\Delta I_{CC}$ | | One input at $V_{CC}$ – 0.6 V, Other inputs at $V_{CC}$ or GND | | 2.7 V to 3.6 V | | | 500 | µA |
| $C_i$ | Control inputs | $V_I$ = $V_{CC}$ or GND | | 3.3 V | | 4.5 | | pF |
| $C_{io}$ | A or B ports | $V_O$ = $V_{CC}$ or GND | | 3.3 V | | 7.5 | | pF |

(1) All typical values are at $V_{CC}$ = 3.3 V, $T_A$ = 25°C.
(2) For I/O ports, the parameter $I_{OZ}$ includes the input leakage current.
(3) This applies in the disabled state only.

## Timing Requirements

over recommended operating free-air temperature range (unless otherwise noted) (see Figure 1)

| | | $V_{CC}$ = 1.8 V ± 0.15 V | | $V_{CC}$ = 2.5 V ± 0.2 V | | $V_{CC}$ = 2.7 V | | $V_{CC}$ = 3.3 V ± 0.3 V | | UNIT |
|---|---|---|---|---|---|---|---|---|---|---|
| | | MIN | MAX | MIN | MAX | MIN | MAX | MIN | MAX | |
| $t_w$ | Pulse duration | (1) | | (1) | | 3.3 | | 3.3 | | ns |
| $t_{su}$ | Setup time, data before $\overline{LE}$↑ or $\overline{CE}$↑ | (1) | | (1) | | 1.6 | | 1.6 | | ns |
| $t_h$ | Hold time, data after $\overline{LE}$↑ or $\overline{CE}$↑ | (1) | | (1) | | 2.1 | | 2.1 | | ns |

(1) This information was not available at the time of publication.

## Switching Characteristics

over recommended operating free-air temperature range (unless otherwise noted) (see Figure 1)

| PARAMETER | FROM (INPUT) | TO (OUTPUT) | $V_{CC}$ = 1.8 V ± 0.15 V | | $V_{CC}$ = 2.5 V ± 0.2 V | | $V_{CC}$ = 2.7 V | | $V_{CC}$ = 3.3 V ± 0.3 V | | UNIT |
|---|---|---|---|---|---|---|---|---|---|---|---|
| | | | MIN | MAX | MIN | MAX | MIN | MAX | MIN | MAX | |
| $t_{pd}$ | A or B | B or A | (1) | (1) | (1) | (1) | | 8 | 1 | 7 | ns |
| | $\overline{LE}$ | | (1) | (1) | (1) | (1) | | 9.5 | 1.2 | 8.5 | |
| $t_{en}$ | $\overline{OE}$ | A or B | (1) | (1) | (1) | (1) | | 9.2 | 1.3 | 7.7 | ns |
| | $\overline{CE}$ | | (1) | (1) | (1) | (1) | | 9.3 | 1.3 | 8 | |
| $t_{dis}$ | $\overline{OE}$ | A or B | (1) | (1) | (1) | (1) | | 7.5 | 1 | 7 | ns |
| | $\overline{CE}$ | | (1) | (1) | (1) | (1) | | 7.5 | 1 | 7 | |

(1) This information was not available at the time of publication.

## Operating Characteristics

$T_A$ = 25°C

| PARAMETER | | | TEST CONDITIONS | $V_{CC}$ = 1.8 V | $V_{CC}$ = 2.5 V | $V_{CC}$ = 3.3 V | UNIT |
|---|---|---|---|---|---|---|---|
| | | | | TYP | TYP | TYP | |
| $C_{pd}$ | Power dissipation capacitance per transceiver | Outputs enabled | f = 10 MHz | (1) | (1) | 49 | pF |
| | | Outputs disabled | | (1) | (1) | 6 | |

(1) This information was not available at the time of publication.

## PARAMETER MEASUREMENT INFORMATION

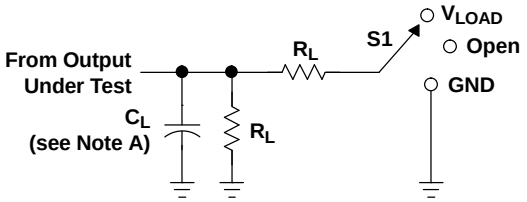


LOAD CIRCUIT

| TEST | S1 |
|---|---|
| $t_{PLH}/t_{PHL}$ | Open |
| $t_{PLZ}/t_{PZL}$ | $V_{LOAD}$ |
| $t_{PHZ}/t_{PZH}$ | GND |

| $V_{CC}$ | INPUTS | | $V_M$ | $V_{LOAD}$ | $C_L$ | $R_L$ | $V_\Delta$ |
|---|---|---|---|---|---|---|---|
| | $V_I$ | $t_r/t_f$ | | | | | |
| 1.8 V ± 0.15 V | $V_{CC}$ | ≤2 ns | $V_{CC}/2$ | $2 \times V_{CC}$ | 30 pF | 1 kΩ | 0.15 V |
| 2.5 V ± 0.2 V | $V_{CC}$ | ≤2 ns | $V_{CC}/2$ | $2 \times V_{CC}$ | 30 pF | 500 Ω | 0.15 V |
| 2.7 V | 2.7 V | ≤2.5 ns | 1.5 V | 6 V | 50 pF | 500 Ω | 0.3 V |
| 3.3 V ± 0.3 V | 2.7 V | ≤2.5 ns | 1.5 V | 6 V | 50 pF | 500 Ω | 0.3 V |

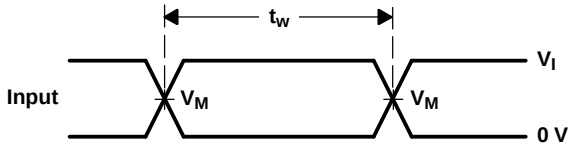


VOLTAGE WAVEFORMS
PULSE DURATION

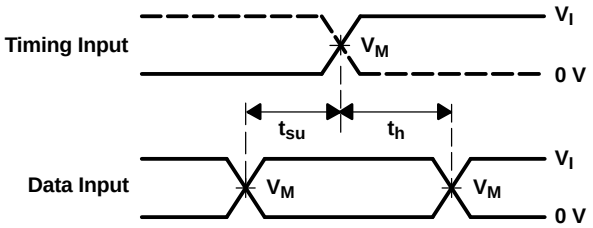


VOLTAGE WAVEFORMS
SETUP AND HOLD TIMES

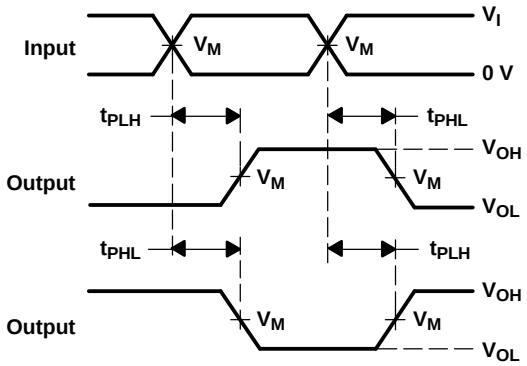


VOLTAGE WAVEFORMS
PROPAGATION DELAY TIMES
INVERTING AND NONINVERTING OUTPUTS

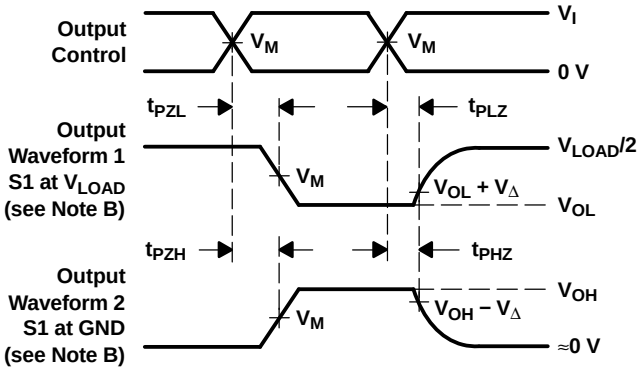


VOLTAGE WAVEFORMS
ENABLE AND DISABLE TIMES
LOW- AND HIGH-LEVEL ENABLING

NOTES:
A. $C_L$ includes probe and jig capacitance.
B. Waveform 1 is for an output with internal conditions such that the output is low, except when disabled by the output control. Waveform 2 is for an output with internal conditions such that the output is high, except when disabled by the output control.
C. All input pulses are supplied by generators having the following characteristics: PRR ≤ 10 MHz, $Z_O$ = 50 Ω.
D. The outputs are measured one at a time, with one transition per measurement.
E. $t_{PLZ}$ and $t_{PHZ}$ are the same as $t_{dis}$.
F. $t_{PZL}$ and $t_{PZH}$ are the same as $t_{en}$.
G. $t_{PLH}$ and $t_{PHL}$ are the same as $t_{pd}$.
H. All parameters and waveforms are not applicable to all devices.

**Figure 1. Load Circuit and Voltage Waveforms**

## PACKAGING INFORMATION

| Orderable part number | Status (1) | Material type (2) | Package \| Pins | Package qty \| Carrier | RoHS (3) | Lead finish/ Ball material (4) | MSL rating/ Peak reflow (5) | Op temp (°C) | Part marking (6) |
|---|---|---|---|---|---|---|---|---|---|
| SN74LVC543ADBR | Active | Production | SSOP (DB) \| 24 | 2000 \| LARGE T&R | Yes | NIPDAU | Level-1-260C-UNLIM | -40 to 85 | LC543A |
| SN74LVC543ADBR.B | Active | Production | SSOP (DB) \| 24 | 2000 \| LARGE T&R | Yes | NIPDAU | Level-1-260C-UNLIM | -40 to 85 | LC543A |
| SN74LVC543ADW | Active | Production | SOIC (DW) \| 24 | 25 \| TUBE | Yes | NIPDAU | Level-1-260C-UNLIM | -40 to 85 | LVC543A |
| SN74LVC543ADW.B | Active | Production | SOIC (DW) \| 24 | 25 \| TUBE | Yes | NIPDAU | Level-1-260C-UNLIM | -40 to 85 | LVC543A |
| SN74LVC543ADWR | Active | Production | SOIC (DW) \| 24 | 2000 \| LARGE T&R | Yes | NIPDAU | Level-1-260C-UNLIM | -40 to 85 | LVC543A |
| SN74LVC543ADWR.B | Active | Production | SOIC (DW) \| 24 | 2000 \| LARGE T&R | Yes | NIPDAU | Level-1-260C-UNLIM | -40 to 85 | LVC543A |
| SN74LVC543APW | Active | Production | TSSOP (PW) \| 24 | 60 \| TUBE | Yes | NIPDAU | Level-1-260C-UNLIM | -40 to 85 | LC543A |
| SN74LVC543APW.B | Active | Production | TSSOP (PW) \| 24 | 60 \| TUBE | Yes | NIPDAU | Level-1-260C-UNLIM | -40 to 85 | LC543A |
| SN74LVC543APWR | Active | Production | TSSOP (PW) \| 24 | 2000 \| LARGE T&R | Yes | NIPDAU | Level-1-260C-UNLIM | -40 to 85 | LC543A |
| SN74LVC543APWR.B | Active | Production | TSSOP (PW) \| 24 | 2000 \| LARGE T&R | Yes | NIPDAU | Level-1-260C-UNLIM | -40 to 85 | LC543A |
| SN74LVC543APWT | Active | Production | TSSOP (PW) \| 24 | 250 \| SMALL T&R | Yes | NIPDAU | Level-1-260C-UNLIM | -40 to 85 | LC543A |
| SN74LVC543APWT.B | Active | Production | TSSOP (PW) \| 24 | 250 \| SMALL T&R | Yes | NIPDAU | Level-1-260C-UNLIM | -40 to 85 | LC543A |

(1) **Status:** For more details on status, see our product life cycle.

(2) **Material type:** When designated, preproduction parts are prototypes/experimental devices, and are not yet approved or released for full production. Testing and final process, including without limitation quality assurance, reliability performance testing, and/or process qualification, may not yet be complete, and this item is subject to further changes or possible discontinuation. If available for ordering, purchases will be subject to an additional waiver at checkout, and are intended for early internal evaluation purposes only. These items are sold without warranties of any kind.

(3) **RoHS values:** Yes, No, RoHS Exempt. See the TI RoHS Statement for additional information and value definition.

(4) **Lead finish/Ball material:** Parts may have multiple material finish options. Finish options are separated by a vertical ruled line. Lead finish/Ball material values may wrap to two lines if the finish value exceeds the maximum column width.

(5) **MSL rating/Peak reflow:** The moisture sensitivity level ratings and peak solder (reflow) temperatures. In the event that a part has multiple moisture sensitivity ratings, only the lowest level per JEDEC standards is shown. Refer to the shipping label for the actual reflow temperature that will be used to mount the part to the printed circuit board.

(6) **Part marking:** There may be an additional marking, which relates to the logo, the lot trace code information, or the environmental category of the part.

Multiple part markings will be inside parentheses. Only one part marking contained in parentheses and separated by a "~" will appear on a part. If a line is indented then it is a continuation of the previous line and the two combined represent the entire part marking for that device.

**Important Information and Disclaimer:**The information provided on this page represents TI's knowledge and belief as of the date that it is provided. TI bases its knowledge and belief on information provided by third parties, and makes no representation or warranty as to the accuracy of such information. Efforts are underway to better integrate information from third parties. TI has taken and continues to take reasonable steps to provide representative and accurate information but may not have conducted destructive testing or chemical analysis on incoming materials and chemicals. TI and TI suppliers consider certain information to be proprietary, and thus CAS numbers and other limited information may not be available for release.

In no event shall TI's liability arising out of such information exceed the total purchase price of the TI part(s) at issue in this document sold by TI to Customer on an annual basis.

## TAPE AND REEL INFORMATION

**REEL DIMENSIONS**

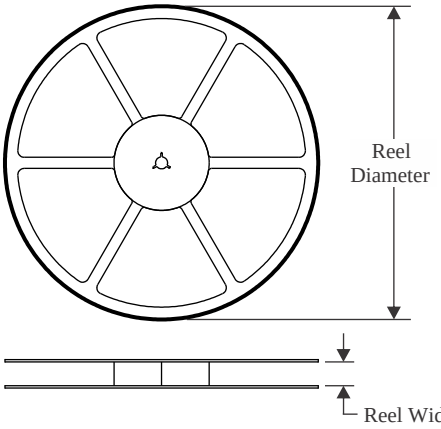


**TAPE DIMENSIONS**

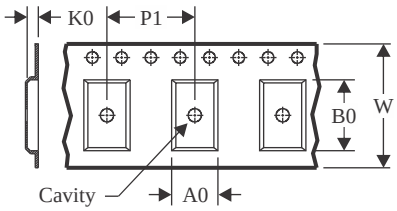


| | |
|---|---|
| A0 | Dimension designed to accommodate the component width |
| B0 | Dimension designed to accommodate the component length |
| K0 | Dimension designed to accommodate the component thickness |
| W | Overall width of the carrier tape |
| P1 | Pitch between successive cavity centers |

**QUADRANT ASSIGNMENTS FOR PIN 1 ORIENTATION IN TAPE**

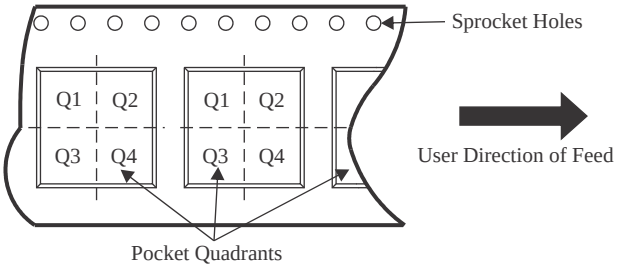


*All dimensions are nominal

| Device | Package Type | Package Drawing | Pins | SPQ | Reel Diameter (mm) | Reel Width W1 (mm) | A0 (mm) | B0 (mm) | K0 (mm) | P1 (mm) | W (mm) | Pin1 Quadrant |
|---|---|---|---|---|---|---|---|---|---|---|---|---|
| SN74LVC543ADBR | SSOP | DB | 24 | 2000 | 330.0 | 16.4 | 8.2 | 8.8 | 2.5 | 12.0 | 16.0 | Q1 |
| SN74LVC543ADWR | SOIC | DW | 24 | 2000 | 330.0 | 24.4 | 10.75 | 15.7 | 2.7 | 12.0 | 24.0 | Q1 |
| SN74LVC543APWR | TSSOP | PW | 24 | 2000 | 330.0 | 16.4 | 6.95 | 8.3 | 1.6 | 8.0 | 16.0 | Q1 |
| SN74LVC543APWT | TSSOP | PW | 24 | 250 | 330.0 | 16.4 | 6.95 | 8.3 | 1.6 | 8.0 | 16.0 | Q1 |

TAPE AND REEL BOX DIMENSIONS

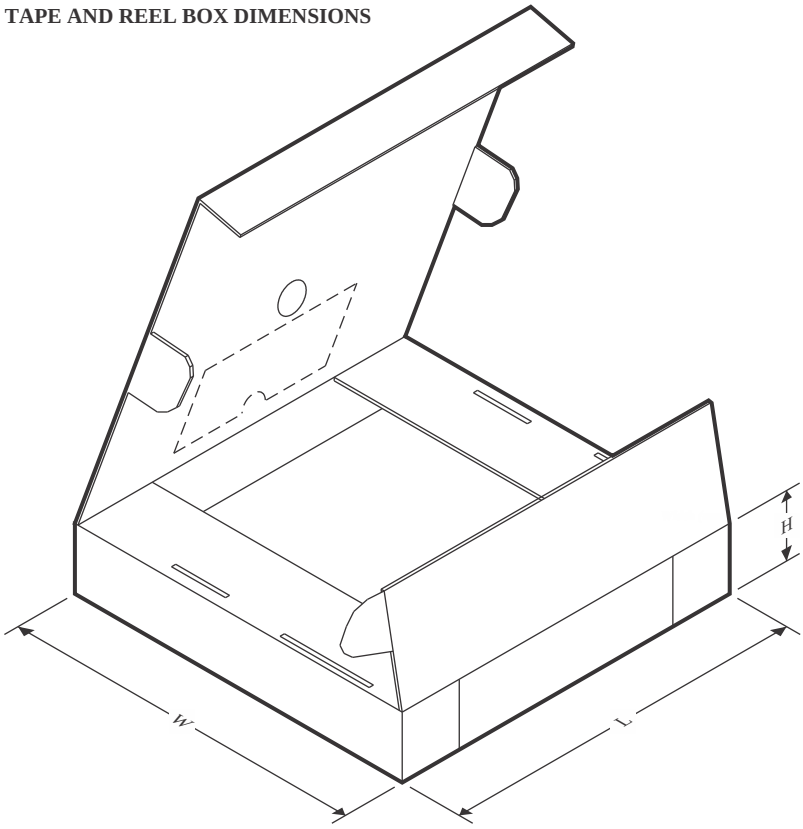


*All dimensions are nominal

| Device | Package Type | Package Drawing | Pins | SPQ | Length (mm) | Width (mm) | Height (mm) |
|---|---|---|---|---|---|---|---|
| SN74LVC543ADBR | SSOP | DB | 24 | 2000 | 356.0 | 356.0 | 35.0 |
| SN74LVC543ADWR | SOIC | DW | 24 | 2000 | 350.0 | 350.0 | 43.0 |
| SN74LVC543APWR | TSSOP | PW | 24 | 2000 | 356.0 | 356.0 | 35.0 |
| SN74LVC543APWT | TSSOP | PW | 24 | 250 | 356.0 | 356.0 | 35.0 |

## TUBE

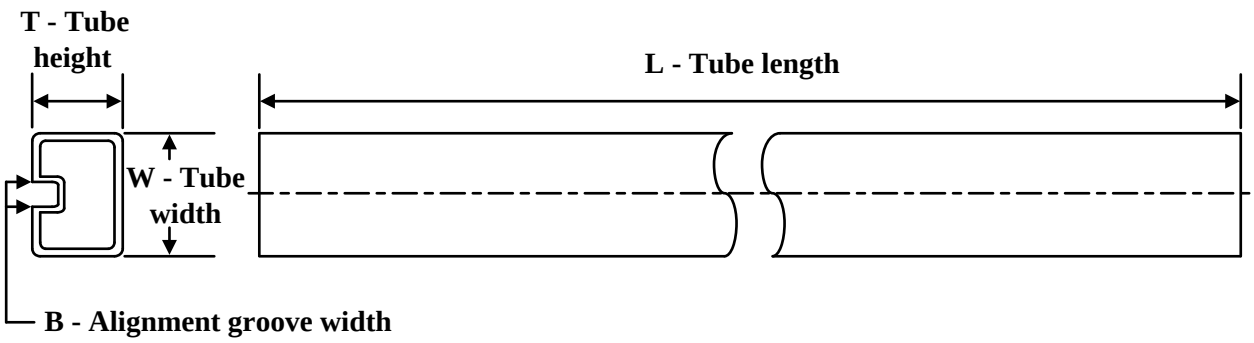


*All dimensions are nominal

| Device | Package Name | Package Type | Pins | SPQ | L (mm) | W (mm) | T (µm) | B (mm) |
|---|---|---|---|---|---|---|---|---|
| SN74LVC543ADW | DW | SOIC | 24 | 25 | 506.98 | 12.7 | 4826 | 6.6 |
| SN74LVC543ADW.B | DW | SOIC | 24 | 25 | 506.98 | 12.7 | 4826 | 6.6 |
| SN74LVC543APW | PW | TSSOP | 24 | 60 | 530 | 10.2 | 3600 | 3.5 |
| SN74LVC543APW.B | PW | TSSOP | 24 | 60 | 530 | 10.2 | 3600 | 3.5 |

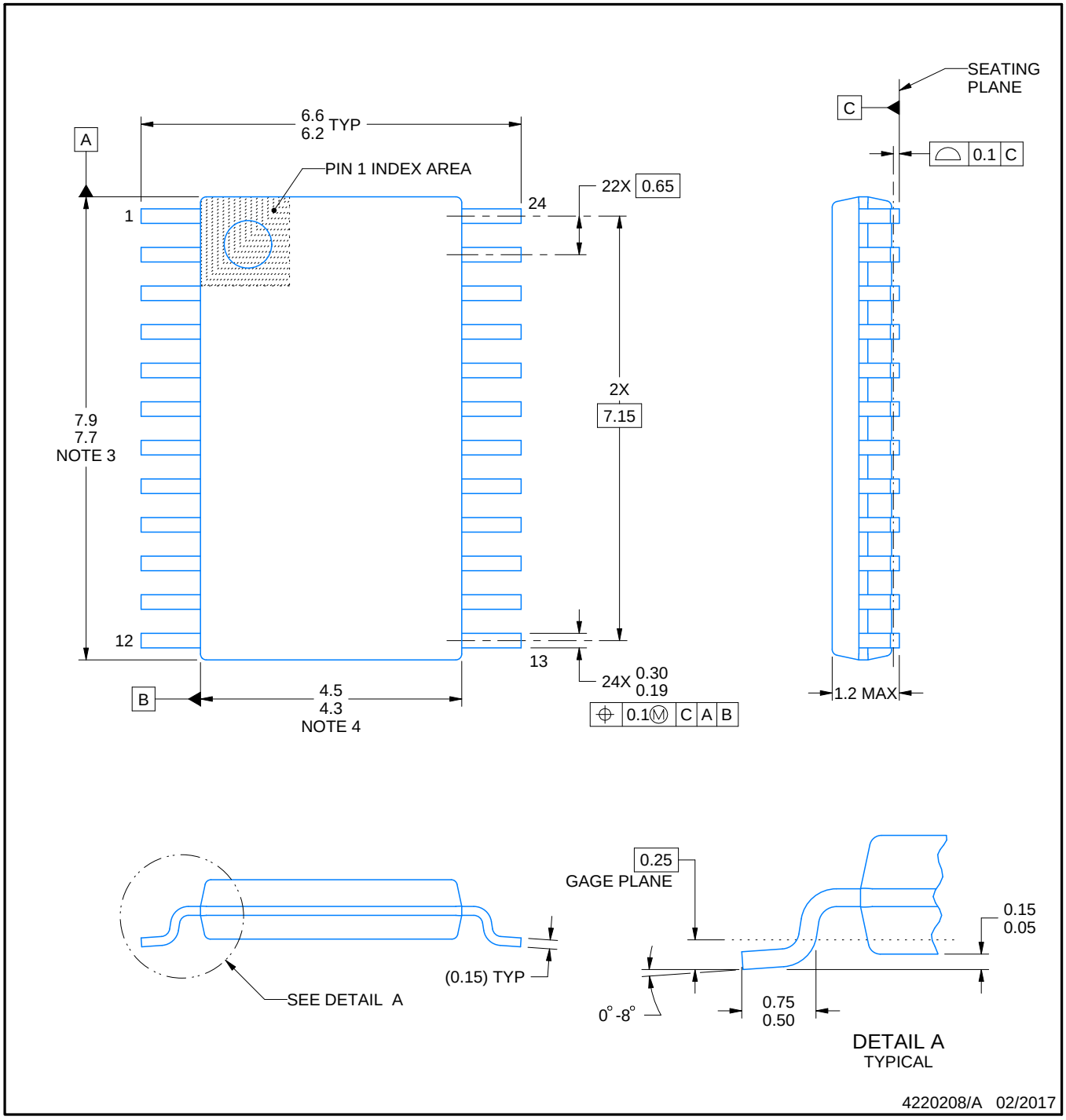


NOTES:

1. All linear dimensions are in millimeters. Any dimensions in parenthesis are for reference only. Dimensioning and tolerancing per ASME Y14.5M.
2. This drawing is subject to change without notice.
3. This dimension does not include mold flash, protrusions, or gate burrs. Mold flash, protrusions, or gate burrs shall not exceed 0.15 mm per side.
4. This dimension does not include interlead flash. Interlead flash shall not exceed 0.25 mm per side.
5. Reference JEDEC registration MO-153.

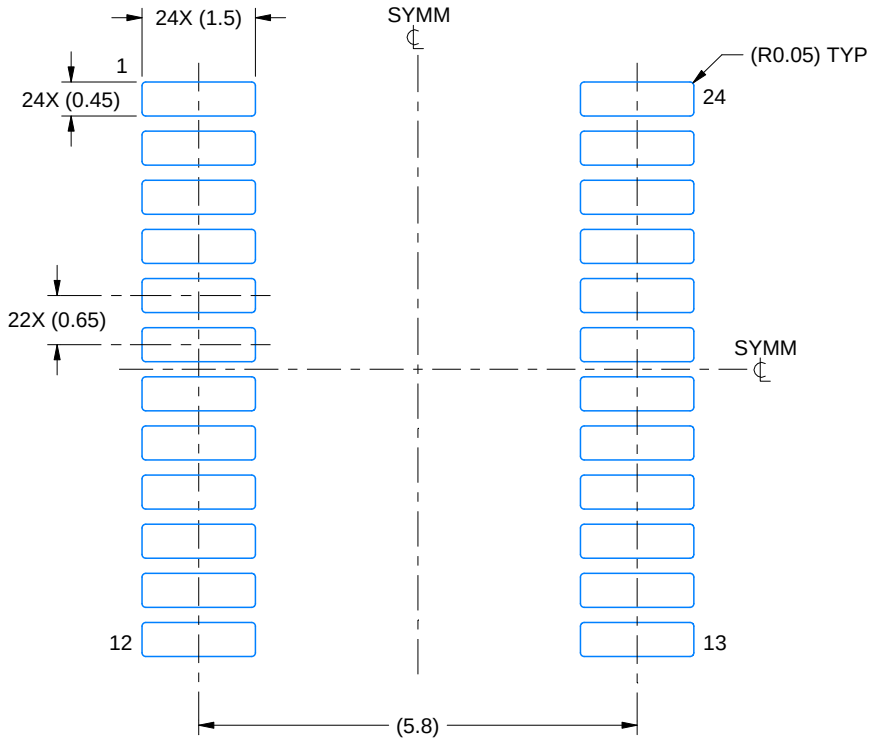


LAND PATTERN EXAMPLE
EXPOSED METAL SHOWN
SCALE: 10X

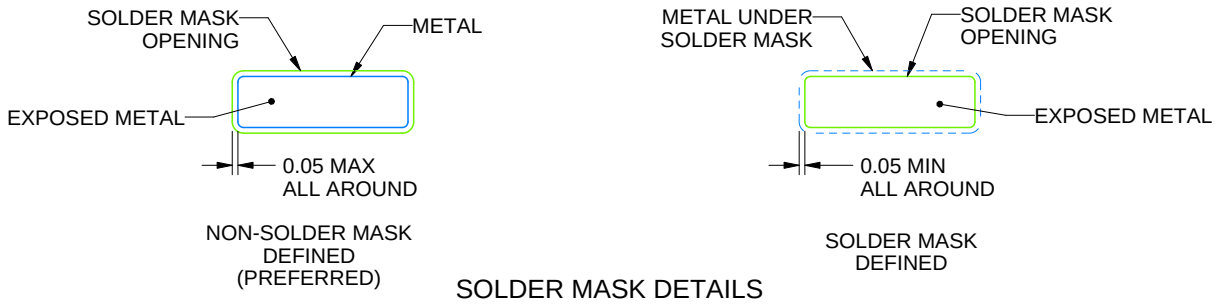


SOLDER MASK DETAILS

4220208/A 02/2017

NOTES: (continued)

6. Publication IPC-7351 may have alternate designs.
7. Solder mask tolerances between and around signal pads can vary based on board fabrication site.

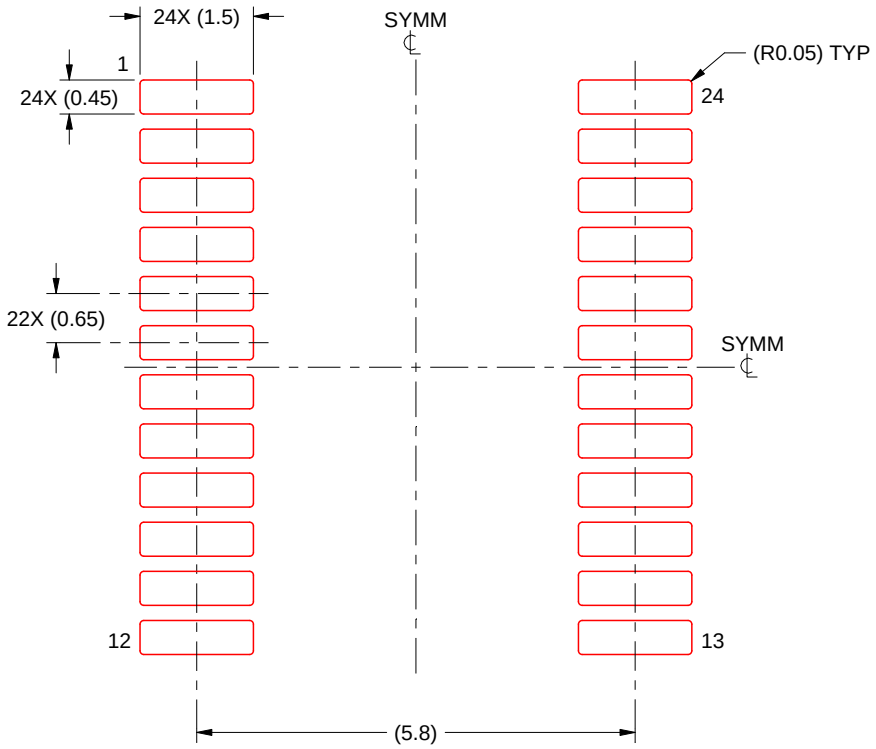


SOLDER PASTE EXAMPLE
BASED ON 0.125 mm THICK STENCIL
SCALE: 10X

4220208/A 02/2017

NOTES: (continued)

8. Laser cutting apertures with trapezoidal walls and rounded corners may offer better paste release. IPC-7525 may have alternate design recommendations.
9. Board assembly site may have different recommendations for stencil design.

DW (R–PDSO–G24) PLASTIC SMALL OUTLINE

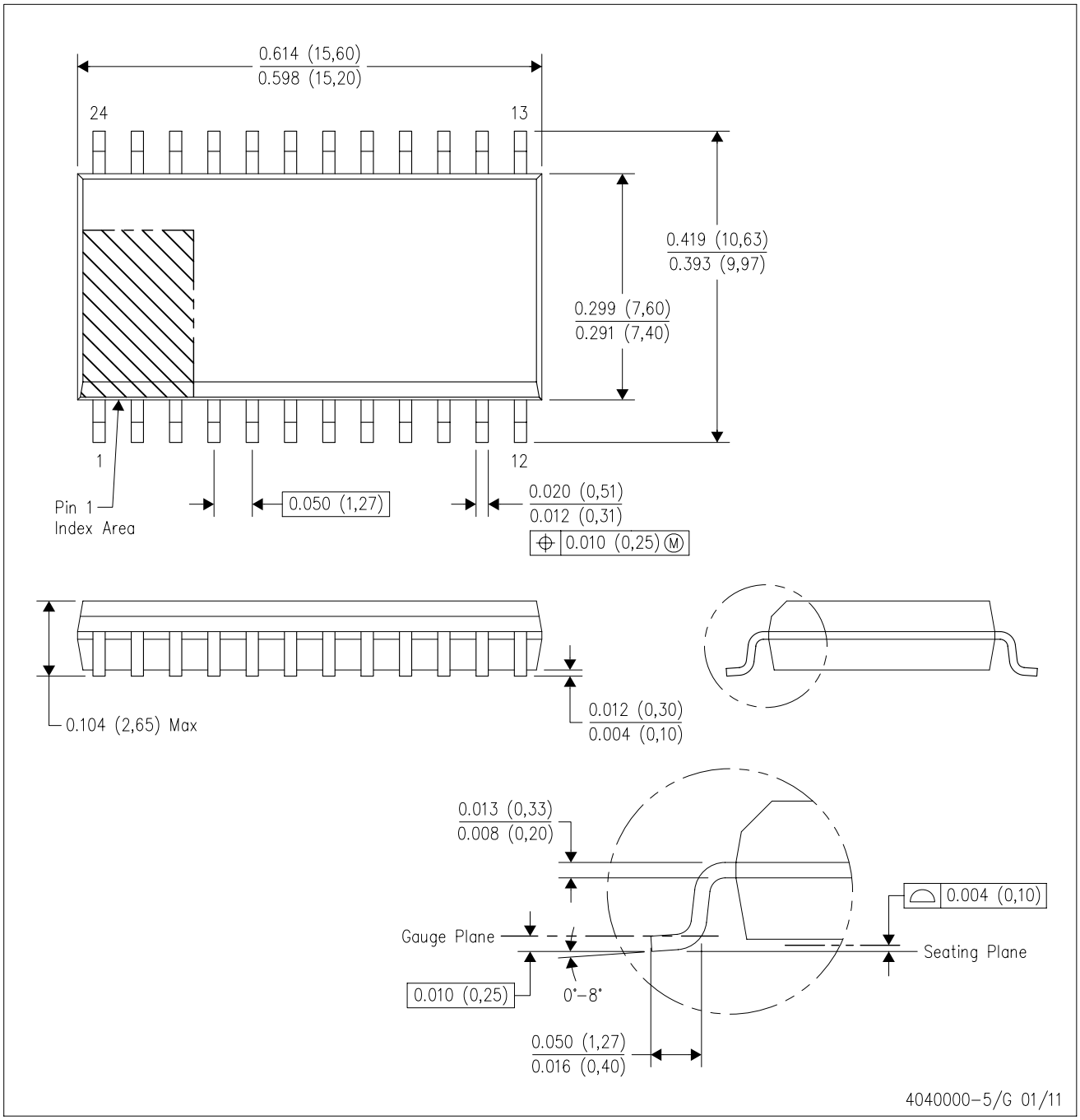


NOTES:
A. All linear dimensions are in inches (millimeters). Dimensioning and tolerancing per ASME Y14.5M–1994.
B. This drawing is subject to change without notice.
C. Body dimensions do not include mold flash or protrusion not to exceed 0.006 (0,15).
D. Falls within JEDEC MS–013 variation AD.

DW (R–PDSO–G24) PLASTIC SMALL OUTLINE

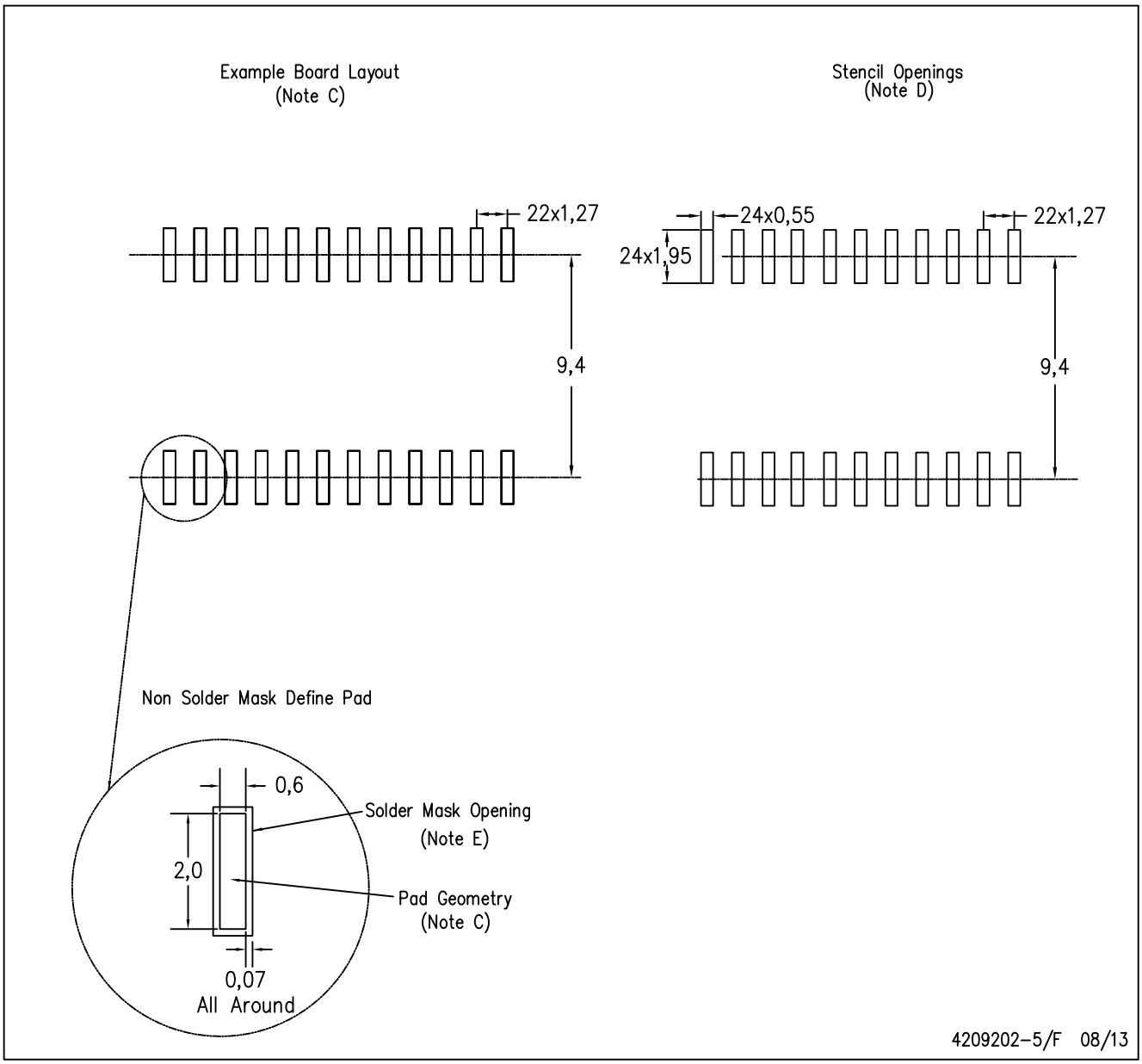


NOTES:
A. All linear dimensions are in millimeters.
B. This drawing is subject to change without notice.
C. Refer to IPC7351 for alternate board design.
D. Laser cutting apertures with trapezoidal walls and also rounding corners will offer better paste release. Customers should contact their board assembly site for stencil design recommendations. Refer to IPC–7525
E. Customers should contact their board fabrication site for solder mask tolerances between and around signal pads.

**DB (R-PDSO-G**)** **PLASTIC SMALL-OUTLINE**

**28 PINS SHOWN**

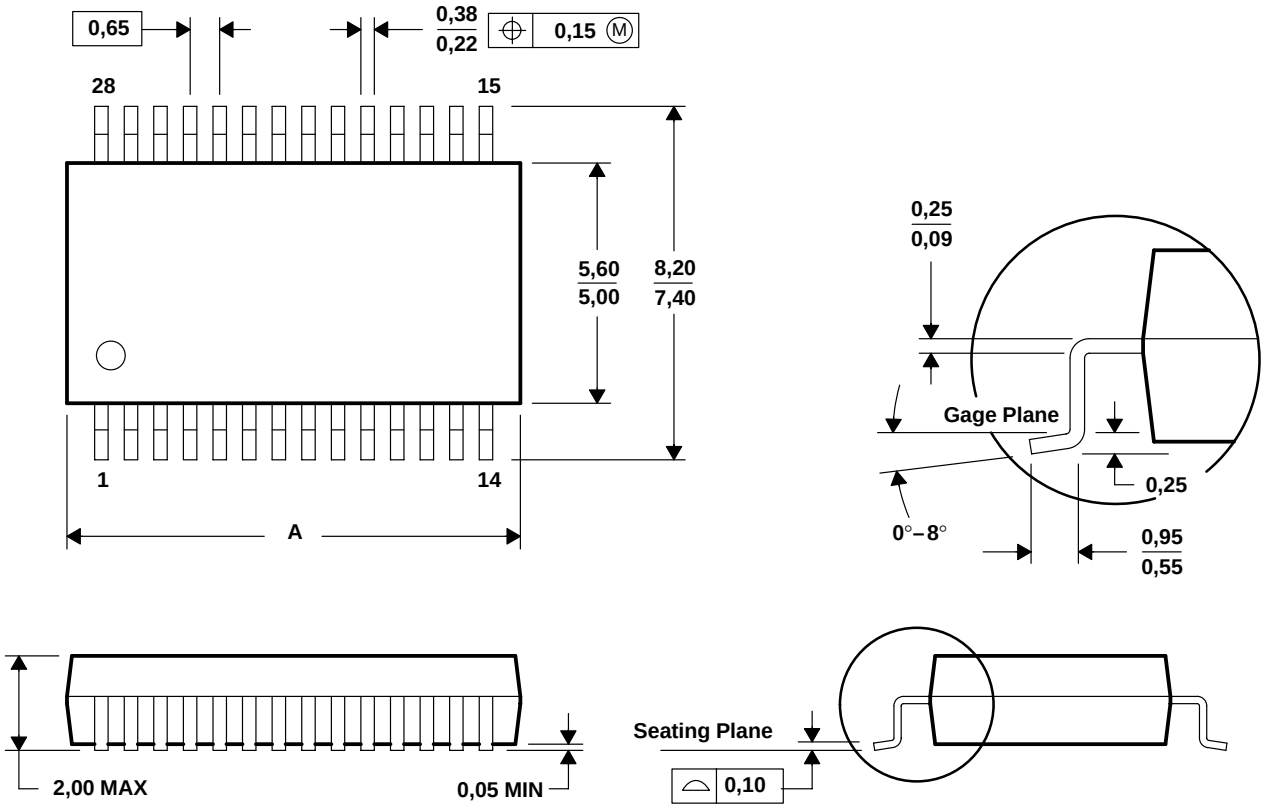


| DIM \ PINS ** | 14 | 16 | 20 | 24 | 28 | 30 | 38 |
|---|---|---|---|---|---|---|---|
| A MAX | 6,50 | 6,50 | 7,50 | 8,50 | 10,50 | 10,50 | 12,90 |
| A MIN | 5,90 | 5,90 | 6,90 | 7,90 | 9,90 | 9,90 | 12,30 |

**4040065 /E 12/01**

NOTES: A. All linear dimensions are in millimeters.
B. This drawing is subject to change without notice.
C. Body dimensions do not include mold flash or protrusion not to exceed 0,15.
D. Falls within JEDEC MO-150

# IMPORTANT NOTICE AND DISCLAIMER

TI PROVIDES TECHNICAL AND RELIABILITY DATA (INCLUDING DATA SHEETS), DESIGN RESOURCES (INCLUDING REFERENCE DESIGNS), APPLICATION OR OTHER DESIGN ADVICE, WEB TOOLS, SAFETY INFORMATION, AND OTHER RESOURCES “AS IS” AND WITH ALL FAULTS, AND DISCLAIMS ALL WARRANTIES, EXPRESS AND IMPLIED, INCLUDING WITHOUT LIMITATION ANY IMPLIED WARRANTIES OF MERCHANTABILITY, FITNESS FOR A PARTICULAR PURPOSE OR NON-INFRINGEMENT OF THIRD PARTY INTELLECTUAL PROPERTY RIGHTS.

These resources are intended for skilled developers designing with TI products. You are solely responsible for (1) selecting the appropriate TI products for your application, (2) designing, validating and testing your application, and (3) ensuring your application meets applicable standards, and any other safety, security, regulatory or other requirements.

These resources are subject to change without notice. TI grants you permission to use these resources only for development of an application that uses the TI products described in the resource. Other reproduction and display of these resources is prohibited. No license is granted to any other TI intellectual property right or to any third party intellectual property right. TI disclaims responsibility for, and you will fully indemnify TI and its representatives against, any claims, damages, costs, losses, and liabilities arising out of your use of these resources.

TI’s products are provided subject to TI’s Terms of Sale or other applicable terms available either on ti.com or provided in conjunction with such TI products. TI’s provision of these resources does not expand or otherwise alter TI’s applicable warranties or warranty disclaimers for TI products.

TI objects to and rejects any additional or different terms you may have proposed.

Mailing Address: Texas Instruments, Post Office Box 655303, Dallas, Texas 75265
Copyright © 2025, Texas Instruments Incorporated