LMV84x-Q1 CMOS Input, RRIO, Low Power, Wide Supply Range, 4.5-MHz Operational Amplifiers

1 Features

- AEC-Q100 Automotive Qualification Test Guidance With the Following:
  - Device Temperature Grade 1: –40°C to +125°C Ambient Operating Temperature
  - Device HBM ESD Classification Level 2
  - Device CDM ESD Classification Level C3
- Unless Otherwise Noted, Typical Values at T_A = 25 °C, V^+ = 5 V.
- Small 5-Pin SC70 Package (2.00 mm × 1.25 mm × 0.95 mm)
- Wide Supply Voltage Range: 2.7 V to 12 V
- Specified Performance at 3.3 V, 5 V and ±5 V
- Low Supply Current: 1 mA Per Channel
- Unity Gain Bandwidth: 4.5 MHz
- Open-Loop Gain: 133 dB
- Input Offset Voltage: 500 µV Maximum
- Input Bias Current: 0.3 pA
- CMRR at 112 dB and PSSR at 108 dB
- Input Voltage Noise: 20 nV/$\sqrt{\text{Hz}}$
- Temperature Range: −40°C to 125°C
- Rail-to-Rail Input and Output (RRIO)

2 Applications

- High Impedance Sensor Interface
- Battery-Powered Instrumentation
- High Gain and Instrumentation Amplifiers
- DAC Buffers and Active Filters

3 Description

The LMV84x-Q1 devices are low-voltage and low-power operational amplifiers that operate with supply voltages ranging from 2.7 V to 12 V and have rail-to-rail input and output capability. Their low offset voltage, low supply current, and CMOS inputs make them ideal for high impedance sensor interface and battery-powered applications.

The single LMV841-Q1 is offered in the space-saving 5-pin SC70 package, the dual LMV842-Q1 in the 8-pin VSSOP and 8-pin SOIC packages, and the quad LMV844-Q1 in the 14-pin TSSOP and 14-pin SOIC packages. These small packages are ideal solutions for area-constrained PCBs and portable electronics.

The LMV841-Q1, LMV842-Q1, and LMV844-Q1 incorporate enhanced manufacturing and support processes for the automotive market, including defect detection methodologies. Reliability qualification is compliant with the requirements and temperature grades defined in the AEC-Q100 standard.

Device Information(1)

PART NUMBER	PACKAGE	BODY SIZE (NOM)
LMV841-Q1	SC70 (5)	2.00 mm × 1.25 mm
LMV842-Q1	VSSOP (8)	3.00 mm × 3.00 mm
	SOIC (8)	4.90 mm × 3.91 mm
LMV844-Q1	SOIC (14)	8.65 mm × 3.91 mm
	TSSOP (14)	5.00 mm × 4.40 mm

(1) For all available packages, see the orderable addendum at the end of the data sheet.

Typical Applications

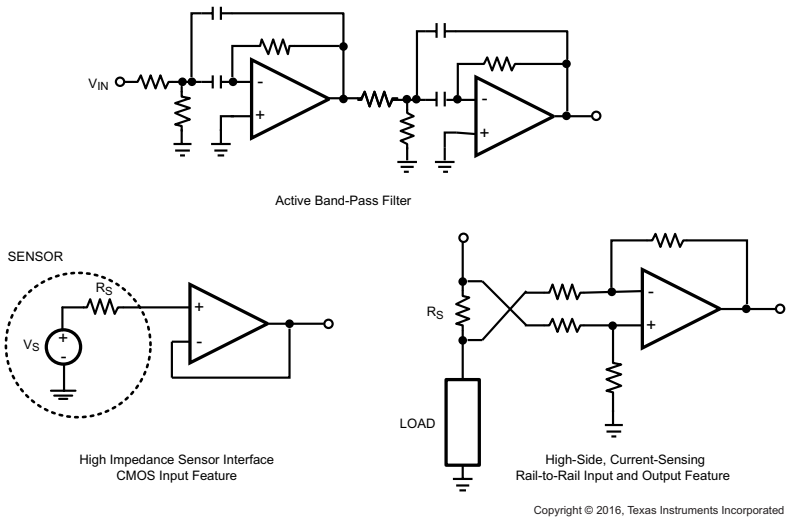

Copyright © 2016, Texas Instruments Incorporated

An IMPORTANT NOTICE at the end of this data sheet addresses availability, warranty, changes, use in safety-critical applications, intellectual property matters and other important disclaimers. PRODUCTION DATA.

Table of Contents

1 Features ... 1
2 Applications ... 1
3 Description ... 1
4 Revision History ... 2
5 Pin Configuration and Functions ... 3
6 Specifications ... 4
6.1 Absolute Maximum Ratings ... 4
6.2 ESD Ratings ... 4
6.3 Recommended Operating Conditions ... 4
6.4 Thermal Information ... 4
6.5 Electrical Characteristics – 3.3 V ... 5
6.6 Electrical Characteristics – 5 V ... 6
6.7 Electrical Characteristics – ±5-V ... 7
6.8 Typical Characteristics ... 10
7 Detailed Description ... 16
7.1 Overview ... 16
7.2 Functional Block Diagram ... 16
7.3 Feature Description ... 16
7.4 Device Functional Modes ... 17
7.5 Interfacing to High Impedance Sensor ... 20
8 Application and Implementation ... 22
8.1 Application Information ... 22
8.2 Typical Applications ... 22
9 Power Supply Recommendations ... 26
10 Layout ... 26
10.1 Layout Guidelines ... 26
10.2 Layout Example ... 26
11 Device and Documentation Support ... 27
11.1 Related Links ... 27
11.2 Receiving Notification of Documentation Updates 27
11.3 Community Resources ... 27
11.4 Trademarks ... 27
11.5 Electrostatic Discharge Caution ... 27
11.6 Glossary ... 27
12 Mechanical, Packaging, and Orderable Information ... 27

4 Revision History

NOTE: Page numbers for previous revisions may differ from page numbers in the current version.

DATE	REVISION	NOTES
October 2017	*	Split automotive from commercial data sheet; updated thermal information; Changed Phase Margin vs CL and Overshoot vs CL graphics in *Typical Characteristics*

Copyright © 2017, Texas Instruments Incorporated

5 Pin Configuration and Functions

DCK Package
5-Pin SC70
Top View

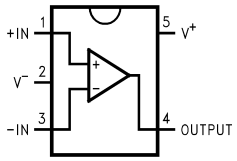

D or DGK Package
8-Pin SOIC and VSSOP
Top View

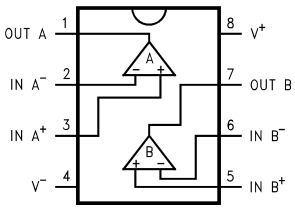

D or PW Package
14-Pin SOIC and TSSOP
Top View

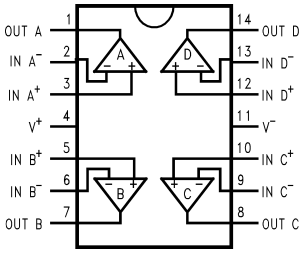

Pin Functions

PIN		DESCRIPTION
NAME	I/O.	
+IN	I	Noninverting Input
–IN	I	Inverting Input
OUT	O	Output
V+	P	Positive Supply
V–	P	Negative Supply

6 Specifications

6.1 Absolute Maximum Ratings

See [1][2]

		MIN	MAX	UNIT
V_{IN} differential		–300	300	mV
Supply voltage ($V^+ – V^–$)			13.2	V
Voltage at input and output pins		V^+ + 0.3	$V^–$ – 0.3	V
Input current			10	mA
Junction temperature [3]			150	°C
Soldering information	Infrared or convection (20 s)		235	°C
	Wave soldering lead temperature (10 s)		260	°C
Storage temperature, T_{stg}		−65	150	°C

(1) Stresses beyond those listed under *Absolute Maximum Ratings* may cause permanent damage to the device. These are stress ratings only and functional operation of the device at these conditions is not implied. Exposure to absolute-maximum-rated conditions for extended periods may affect device reliability.
(2) If Military/Aerospace specified devices are required, contact the Texas Instruments Sales Office / Distributors for availability and specifications.
(3) The maximum power dissipation is a function of $T_{J(MAX)}$, $R_{\theta JA}$, and T_A. The maximum allowable power dissipation at any ambient temperature is $P_D = (T_{J(MAX)} - T_A) / R_{\theta JA}$. All numbers apply for packages soldered directly onto a PCB.

6.2 ESD Ratings

			VALUE	UNIT
$V_{(ESD)}$	Electrostatic discharge	Human-body model (HBM), per AEC Q100-002[1]	±2000	V
		Charged-device model (CDM), per AEC Q100-011	±250	

(1) AEC Q100-002 indicates that HBM stressing shall be in accordance with the ANSI/ESDA/JEDEC JS-001 specification.

6.3 Recommended Operating Conditions

	MIN	MAX	UNIT
Temperature[1]	−40	125	°C
Supply voltage ($V^+ – V^–$)	2.7	12	V

(1) The maximum power dissipation is a function of $T_{J(MAX)}$, $R_{\theta JA}$, and T_A. The maximum allowable power dissipation at any ambient temperature is $P_D = (T_{J(MAX)} – T_A) / R_{\theta JA}$. All numbers apply for packages soldered directly onto a PCB.

6.4 Thermal Information

THERMAL METRIC[1]		LMV84x-Q1					UNIT
		DCK (SC70)	DGK (VSSOP)	D (SOIC)		PW (TSSOP)	
		5 PINS	8 PINS	8 PINS	14 PIN	14 PINS	
$R_{\theta JA}$	Junction-to-ambient thermal resistance[2]	269.9	179.2	121.4	85.4	113.3	°C/W
$R_{\theta JC(top)}$	Junction-to-case (top) thermal resistance	93.8	69.2	65.7	43.5	38.9	°C/W
$R_{\theta JB}$	Junction-to-board thermal resistance	48.8	99.7	62.0	39.8	56.3	°C/W
ψ_{JT}	Junction-to-top characterization parameter	2.0	10.0	16.5	9.2	3.1	°C/W
ψ_{JB}	Junction-to-board characterization parameter	47.9	98.3	61.4	39.6	55.6	°C/W
$R_{\theta JC(bot)}$	Junction-to-case (bottom) thermal resistance	N/A	N/A	N/A	N/A	N/A	°C/W

(1) For more information about traditional and new thermal metrics, see the *Semiconductor and IC Package Thermal Metrics* application report.
(2) The maximum power dissipation is a function of $T_{J(MAX)}$, $R_{\theta JA}$, and T_A. The maximum allowable power dissipation at any ambient temperature is $P_D = (T_{J(MAX)} - T_A) / R_{\theta JA}$. All numbers apply for packages soldered directly onto a PCB.

Copyright © 2017, Texas Instruments Incorporated

6.5 Electrical Characteristics – 3.3 V

Unless otherwise specified, all limits are ensured for T_A = 25°C, V^+ = 3.3 V, V^- = 0 V, V_{CM} = V^+ / 2, and R_L > 10 MΩ to V^+ / 2.[1]

PARAMETER		TEST CONDITIONS		MIN[2]	TYP[3]	MAX[2]	UNIT
V_{OS}	Input offset voltage			–500	±50	500	µV
		at the temperature extremes		–800		800	
TCV_{OS}	Input offset voltage drift [4]				0.5		µV/°C
		at the temperature extremes		–5		5	
I_B	Input bias current [4] [5]				0.3	10	pA
		at the temperature extremes				300	
I_{OS}	Input offset current				40		fA
CMRR	Common-mode rejection ratio LMV841-Q1	0 V ≤ V_{CM} ≤ 3.3 V		84	112		dB
			at the temperature extremes	80			
	Common-mode rejection ratio LMV842-Q1 and LMV844-Q1	0 V ≤ V_{CM} ≤ 3.3 V		77	106		dB
			at the temperature extremes	75			
PSRR	Power supply rejection ratio	2.7 V ≤ V^+ ≤ 12 V, V_O = V^+ / 2		86	108		dB
			at the temperature extremes	82			
CMVR	Input common-mode voltage range	CMRR ≥ 50 dB, at the temperature extremes		–0.1		3.4	V
A_{VOL}	Large signal voltage gain	R_L = 2 kΩ V_O = 0.3 V to 3 V		100	123		dB
			at the temperature extremes	96			
		R_L = 10 kΩ V_O = 0.2 V to 3.1 V		100	131		dB
			at the temperature extremes	96			
V_O	Output swing high, (measured from V^+)	R_L = 2 kΩ to V^+/2			52	80	mV
			at the temperature extremes			120	
		R_L = 10 kΩ to V^+/2			28	50	mV
			at the temperature extremes			70	
	Output swing low, (measured from V^-)	R_L = 2 kΩ to V^+/2			65	100	mV
			at the temperature extremes			120	
		R_L = 10 kΩ to V^+/2			33	65	mV
			at the temperature extremes			75	

(1) Electrical table values apply only for factory testing conditions at the temperature indicated. Factory testing conditions result in very limited self-heating of the device.
(2) Limits are 100% production tested at 25°C. Limits over the operating temperature range are ensured through correlations using statistical quality control (SQC) method.
(3) Typical values represent the most likely parametric norm as determined at the time of characterization. Actual typical values may vary over time and will also depend on the application and configuration. The typical values are not tested and are not ensured on shipped production material.
(4) This parameter is ensured by design and/or characterization and is not tested in production.
(5) Positive current corresponds to current flowing into the device.

Copyright © 2017, Texas Instruments Incorporated

Electrical Characteristics – 3.3 V (continued)

Unless otherwise specified, all limits are ensured for T_A = 25°C, V^+ = 3.3 V, V^- = 0 V, V_{CM} = V^+ / 2, and R_L > 10 MΩ to V^+ / 2.(1)

PARAMETER		TEST CONDITIONS		MIN(2)	TYP(3)	MAX(2)	UNIT
I_O	Output short-circuit current(6)(7)	Sourcing V_O = V^+/2 V_{IN} = 100 mV		20	32		mA
			at the temperature extremes	15			
		Sinking V_O = V^+/2 V_{IN} = −100 mV		20	27		mA
			at the temperature extremes	15			
I_S	Supply current	Per channel			0.93	1.5	mA
			at the temperature extremes			2	
SR	Slew rate (8)	A_V = 1, V_O = 2.3 V_{PP} 10% to 90%			2.5		V/µs
GBW	Gain bandwidth product				4.5		MHz
Φ_m	Phase margin				67		Deg
e_n	Input-referred voltage noise	f = 1 kHz			20		nV/√Hz
R_{OUT}	Open-loop output impedance	f = 3 MHz			70		Ω
THD+N	Total harmonic distortion + noise	f = 1 kHz , A_V = 1 R_L = 10 kΩ			0.005%		
C_{IN}	Input capacitance				7		pF

(6) The maximum power dissipation is a function of $T_{J(MAX)}$, $R_{\theta JA}$, and T_A. The maximum allowable power dissipation at any ambient temperature is $P_D = (T_{J(MAX)} – T_A) / R_{\theta JA}$. All numbers apply for packages soldered directly onto a PCB.
(7) Short circuit test is a momentary test.
(8) Number specified is the slower of positive and negative slew rates.

6.6 Electrical Characteristics – 5 V

Unless otherwise specified, all limits are ensured for T_A = 25°C, V^+ = 5 V, V^- = 0 V, V_{CM} = V^+ / 2, and R_L > 10 MΩ to V^+ / 2.(1)

PARAMETER		TEST CONDITIONS		MIN(2)	TYP(3)	MAX(2)	UNIT
V_{OS}	Input offset voltage			–500	±50	500	µV
		at the temperature extremes		–800		800	
TCV_{OS}	Input offset voltage drift(4)				0.35		µV/°C
		at the temperature extremes		–5		5	
I_B	Input bias current(4)(5)				0.3	10	pA
		at the temperature extremes				300	
I_{OS}	Input offset current				40		fA
CMRR	Common-mode rejection ratio LMV841-Q1	0 V ≤ V_{CM} ≤ 5 V		86	112		dB
			at the temperature extremes	80			
	Common-mode rejection ratio LMV842-Q1 and LMV844-Q1	0 V ≤ V_{CM} ≤ 5 V		81	106		dB
			at the temperature extremes	79			
PSRR	Power supply rejection ratio	2.7 V ≤ V^+ ≤ 12 V, V_O = V^+/2		86	108		dB
			at the temperature extremes	82			

(1) Electrical table values apply only for factory testing conditions at the temperature indicated. Factory testing conditions result in very limited self-heating of the device.
(2) Limits are 100% production tested at 25°C. Limits over the operating temperature range are ensured through correlations using statistical quality control (SQC) method.
(3) Typical values represent the most likely parametric norm as determined at the time of characterization. Actual typical values may vary over time and will also depend on the application and configuration. The typical values are not tested and are not ensured on shipped production material.
(4) This parameter is ensured by design and/or characterization and is not tested in production.
(5) Positive current corresponds to current flowing into the device.

Copyright © 2017, Texas Instruments Incorporated

Electrical Characteristics – 5 V (continued)

Unless otherwise specified, all limits are ensured for T_A = 25°C, V^+ = 5 V, V^- = 0 V, V_{CM} = V^+ / 2, and R_L > 10 MΩ to V^+ / 2.(1)

PARAMETER		TEST CONDITIONS		MIN(2)	TYP(3)	MAX(2)	UNIT
CMVR	Input common-mode voltage range	CMRR ≥ 50 dB, at the temperature extremes		–0.2		5.2	V
A_{VOL}	Large signal voltage gain	R_L = 2 kΩ V_O = 0.3V to 4.7 V		100	125		dB
			at the temperature extremes	96			
		R_L = 10 kΩ V_O = 0.2V to 4.8V		100	133		dB
			at the temperature extremes	96			
V_O	Output swing high, (measured from V^+)	R_L = 2 kΩ to V^+/2			68	100	mV
			at the temperature extremes			120	
		R_L = 10 kΩ to V^+/2			32	50	mV
			at the temperature extremes			70	
	Output swing low, (measured from V^-)	R_L = 2 kΩ to V^+/2			78	120	mV
			at the temperature extremes			140	
		R_L = 10 kΩ to V^+/2			38	70	mV
			at the temperature extremes			80	
I_O	Output short-circuit current(6) (7)	Sourcing V_O = V^+/2 V_{IN} = 100 mV		20	33		mA
			at the temperature extremes	15			
		Sinking V_O = V^+/2 V_{IN} = −100 mV		20	28		mA
			at the temperature extremes	15			
I_S	Supply current	Per channel			0.96	1.5	mA
			at the temperature extremes			2	
SR	Slew rate (8)	A_V = 1, V_O = 4 V_{PP} 10% to 90%			2.5		V/µs
GBW	Gain bandwidth product				4.5		MHz
Φ_m	Phase margin				67		Deg
e_n	Input-referred voltage noise	f = 1 kHz			20		nV/√Hz
R_{OUT}	Open-loop output impedance	f = 3 MHz			70		Ω
THD+N	Total harmonic distortion + noise	f = 1 kHz , A_V = 1 R_L = 10 kΩ			0.003%		
C_{IN}	Input capacitance				6		pF

(6) The maximum power dissipation is a function of $T_{J(MAX)}$, $R_{\theta JA}$, and T_A. The maximum allowable power dissipation at any ambient temperature is $P_D = (T_{J(MAX)} - T_A) / R_{\theta JA}$. All numbers apply for packages soldered directly onto a PCB.
(7) Short circuit test is a momentary test.
(8) Number specified is the slower of positive and negative slew rates.

6.7 Electrical Characteristics – ±5-V

Unless otherwise specified, all limits are ensured for T_A = 25°C, V^+ = 5 V, V^- = –5 V, V_{CM} = 0 V, and R_L > 10 MΩ to V_{CM}.(1)

(1) Electrical table values apply only for factory testing conditions at the temperature indicated. Factory testing conditions result in very limited self-heating of the device.

Electrical Characteristics – ±5-V (continued)

Unless otherwise specified, all limits are ensured for T_A = 25°C, V^+ = 5 V, V^- = –5 V, V_{CM} = 0 V, and R_L > 10 MΩ to V_{CM}.(1)

PARAMETER		TEST CONDITIONS		MIN(2)	TYP(3)	MAX(2)	UNIT
V_{OS}	Input offset voltage			–500	±50	500	µV
		at the temperature extremes		–800		800	
TCV_{OS}	Input offset voltage drift (4)				0.25		µV/°C
		at the temperature extremes		–5		5	
I_B	Input bias current (4) (5)				0.3	10	pA
		at the temperature extremes				300	
I_{OS}	Input offset current				40		fA
CMRR	Common-mode rejection ratio LMV841-Q1	–5 V ≤ V_{CM} ≤ 5 V		86	112		dB
			at the temperature extremes	80			
	Common-mode rejection ratio LMV842-Q1 and LMV844-Q1	–5 V ≤ V_{CM} ≤ 5 V		86	106		dB
			at the temperature extremes	80			
PSRR	Power supply rejection ratio	2.7 V ≤ V^+ ≤ 12 V, V_O = 0 V		86	108		dB
			at the temperature extremes	82			
CMVR	Input common-mode voltage range	CMRR ≥ 50 dB		–5.2		5.2	V
A_{VOL}	Large signal voltage gain	R_L = 2 kΩ V_O = −4.7 V to 4.7 V		100	126		dB
			at the temperature extremes	96			
		R_L = 10 kΩ V_O = −4.8 V to 4.8 V		100	136		dB
			at the temperature extremes	96			
V_O	Output swing high, (measured from V^+)	R_L = 2 kΩ to 0 V			95	130	mV
			at the temperature extremes			155	
		R_L = 10 kΩ to 0 V			44	75	mV
			at the temperature extremes			95	
	Output swing low, (measured from V^-)	R_L = 2 kΩ to 0 V			105	160	mV
			at the temperature extremes			200	
		R_L = 10 kΩ to 0 V			52	80	mV
			at the temperature extremes			100	
I_O	Output short-circuit current (6) (7)	Sourcing V_O = 0 V V_{IN} = 100 mV		20	37		mA
			at the temperature extremes	15			
		Sinking V_O = 0 V V_{IN} = −100 mV		20	29		mA
			at the temperature extremes	15			

(2) Limits are 100% production tested at 25°C. Limits over the operating temperature range are ensured through correlations using statistical quality control (SQC) method.
(3) Typical values represent the most likely parametric norm as determined at the time of characterization. Actual typical values may vary over time and will also depend on the application and configuration. The typical values are not tested and are not ensured on shipped production material.
(4) This parameter is ensured by design and/or characterization and is not tested in production.
(5) Positive current corresponds to current flowing into the device.
(6) The maximum power dissipation is a function of $T_{J(MAX)}$, $R_{\theta JA}$, and T_A. The maximum allowable power dissipation at any ambient temperature is $P_D = (T_{J(MAX)} - T_A) / R_{\theta JA}$. All numbers apply for packages soldered directly onto a PCB.
(7) Short circuit test is a momentary test.

Copyright © 2017, Texas Instruments Incorporated

Electrical Characteristics – ±5-V (continued)

Unless otherwise specified, all limits are ensured for T_A = 25°C, V^+ = 5 V, V^- = –5 V, V_{CM} = 0 V, and R_L > 10 MΩ to V_{CM}.(1)

PARAMETER		TEST CONDITIONS		MIN(2)	TYP(3)	MAX(2)	UNIT
I_S	Supply current	Per channel			1.03	1.7	mA
			at the temperature extremes			2	
SR	Slew rate (8)	A_V = 1, V_O = 9 V_{PP} 10% to 90%			2.5		V/µs
GBW	Gain bandwidth product				4.5		MHz
Φ_m	Phase margin				67		Deg
e_n	Input-referred voltage noise	f = 1 kHz			20		nV/√Hz
R_{OUT}	Open-loop output impedance	f = 3 MHz			70		Ω
THD+N	Total harmonic distortion + noise	f = 1 kHz , A_V = 1 R_L = 10kΩ			0.006%		
C_{IN}	Input capacitance				3		pF

(8) Number specified is the slower of positive and negative slew rates.

6.8 Typical Characteristics

At T_A = 25°C, R_L = 10 kΩ, V_S = 5 V. Unless otherwise specified.

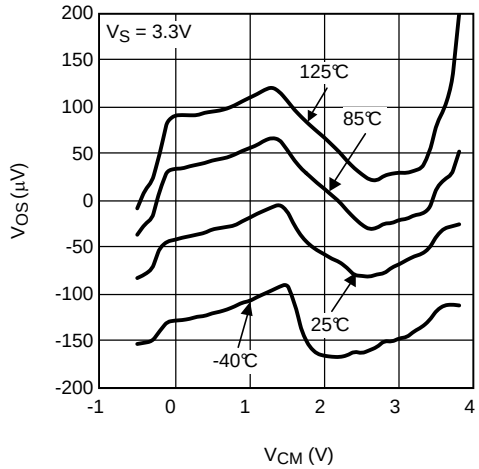

Figure 1. V_{OS} vs V_{CM} Over Temperature at 3.3 V

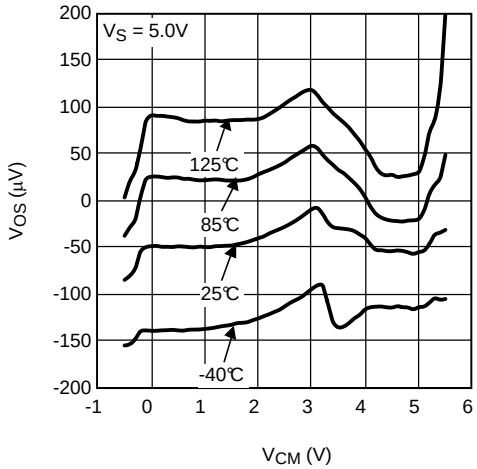

Figure 2. V_{OS} vs V_{CM} Over Temperature at 5 V

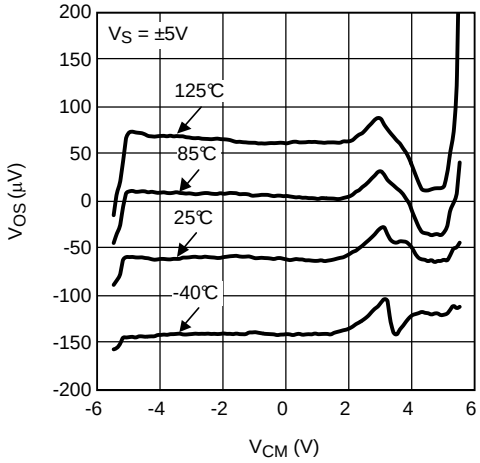

Figure 3. V_{OS} vs V_{CM} Over Temperature at ±5 V

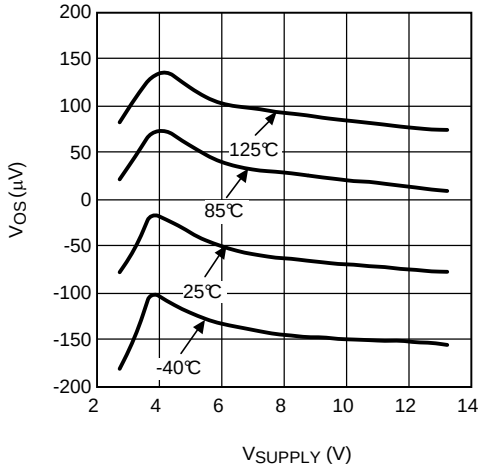

Figure 4. V_{OS} vs Supply Voltage

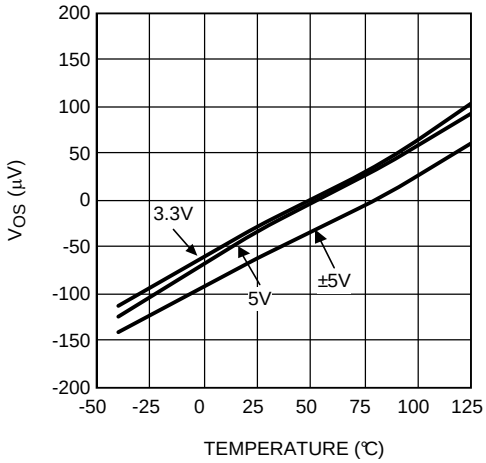

Figure 5. V_{OS} vs Temperature

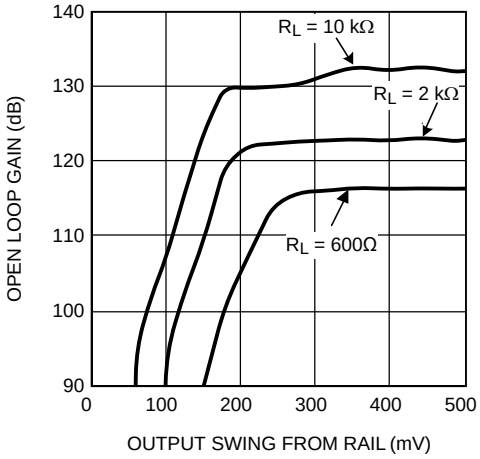

Figure 6. DC Gain vs V_{OUT}

Copyright © 2017, Texas Instruments Incorporated

Typical Characteristics (continued)

At T_A = 25°C, R_L = 10 kΩ, V_S = 5 V. Unless otherwise specified.

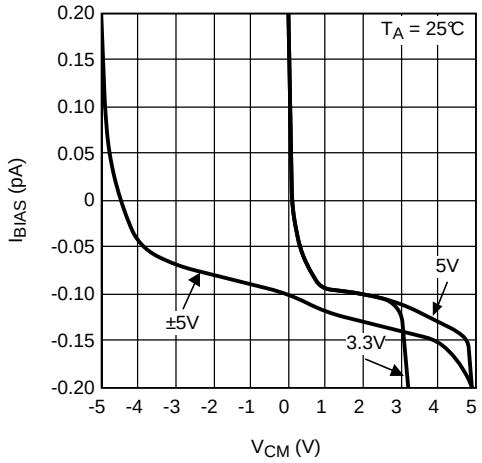

Figure 7. Input Bias Current vs V_{CM}

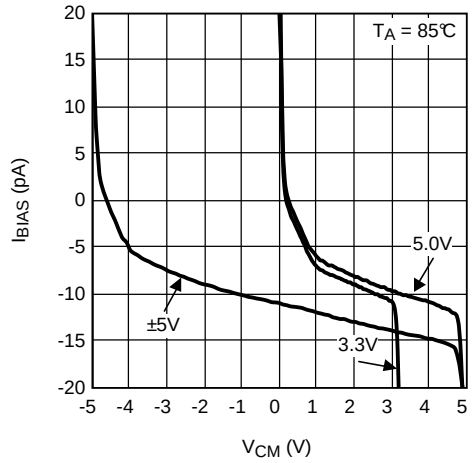

Figure 8. Input Bias Current vs V_{CM}

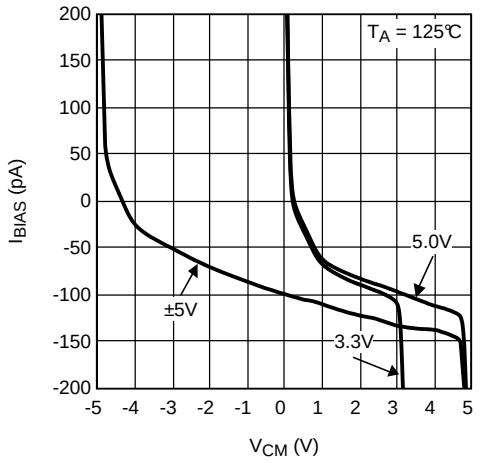

Figure 9. Input Bias Current vs V_{CM}

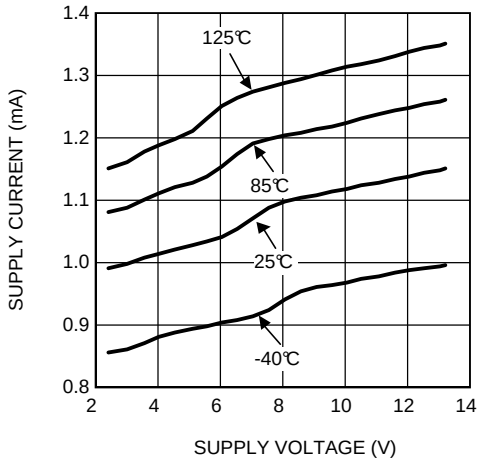

Figure 10. Supply Current Per Channel vs Supply Voltage

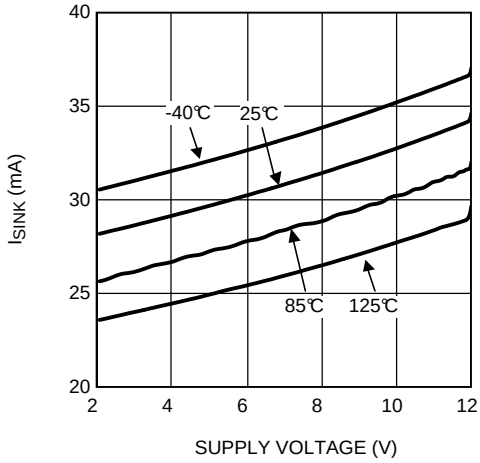

Figure 11. Sinking Current vs Supply Voltage

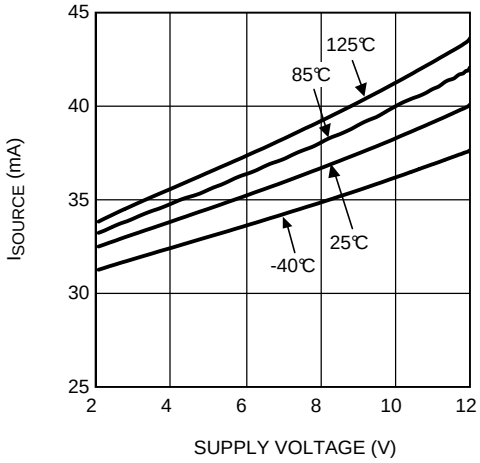

Figure 12. Sourcing Current vs Supply Voltage

Typical Characteristics (continued)

At T_A = 25°C, R_L = 10 kΩ, V_S = 5 V. Unless otherwise specified.

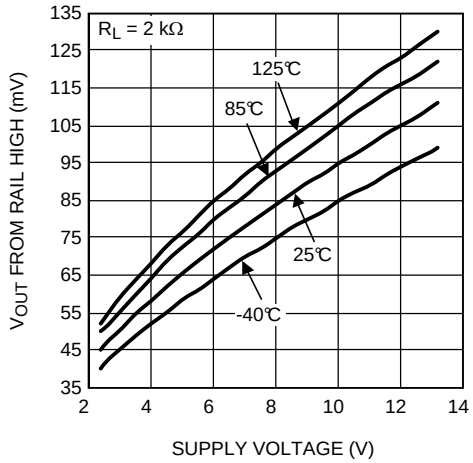

Figure 13. Output Swing High vs Supply Voltage R_L = 2 kΩ

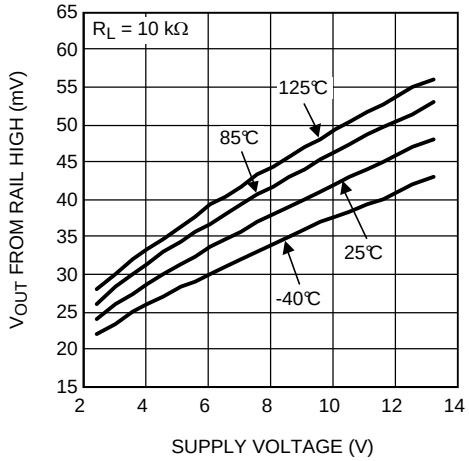

Figure 14. Output Swing High vs Supply Voltage R_L = 10 kΩ

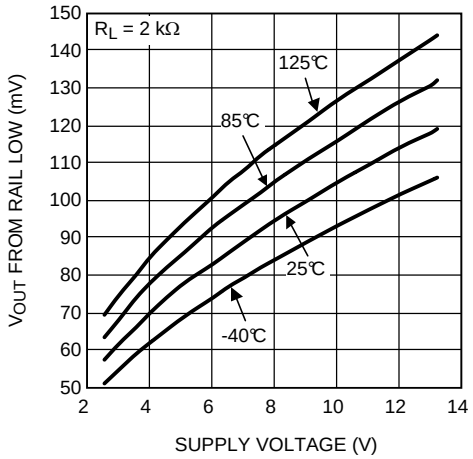

Figure 15. Output Swing Low vs Supply Voltage R_L = 2 kΩ

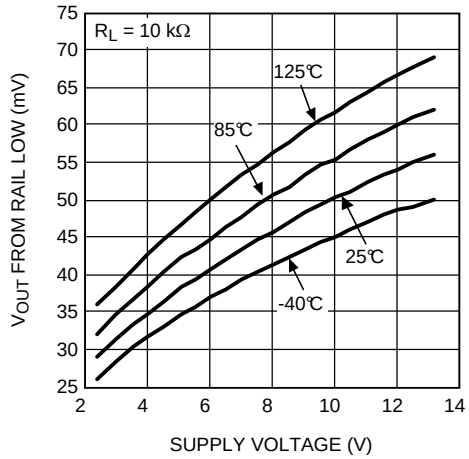

Figure 16. Output Swing Low vs Supply Voltage R_L = 10 kΩ

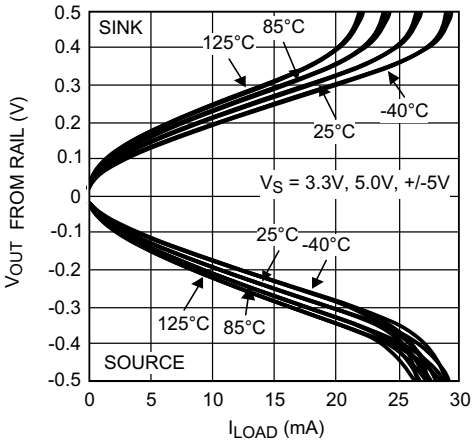

Figure 17. Output Voltage Swing vs Load Current

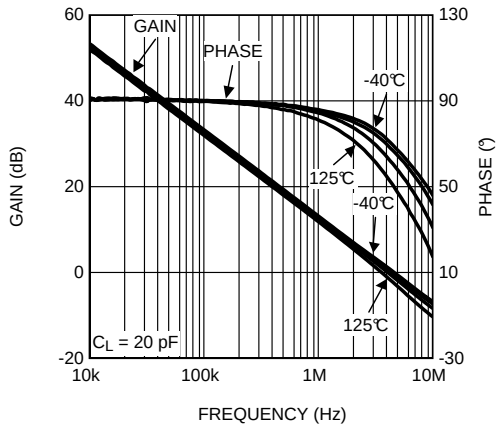

Figure 18. Open-Loop Frequency Response Over Temperature

Copyright © 2017, Texas Instruments Incorporated

Typical Characteristics (continued)

At T_A = 25°C, R_L = 10 kΩ, V_S = 5 V. Unless otherwise specified.

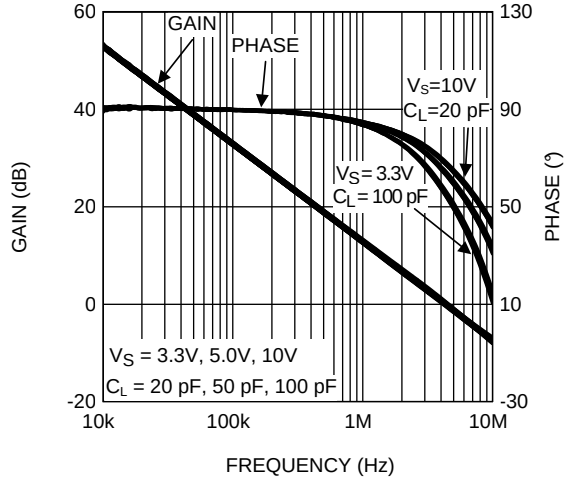

Figure 19. Open-Loop Frequency Response Over Load Conditions

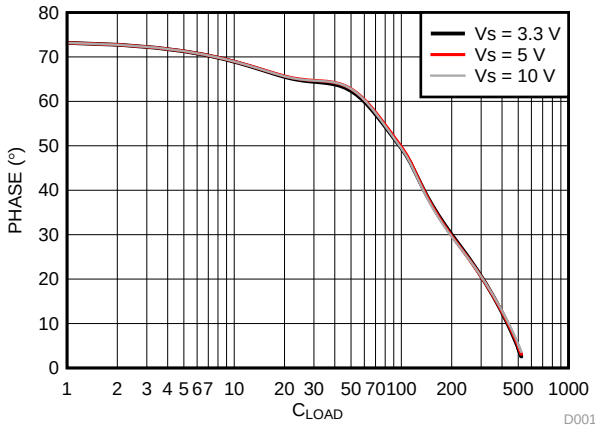

Figure 20. Phase Margin vs C_L

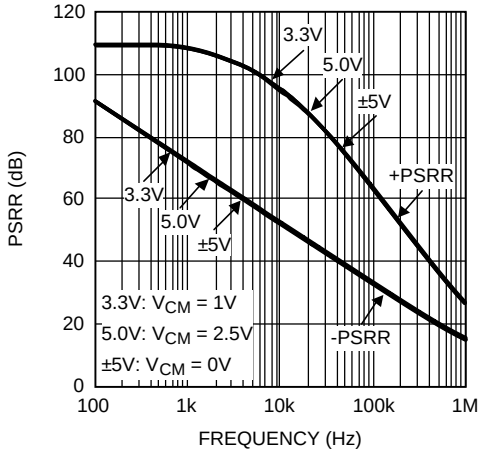

Figure 21. PSRR vs Frequency

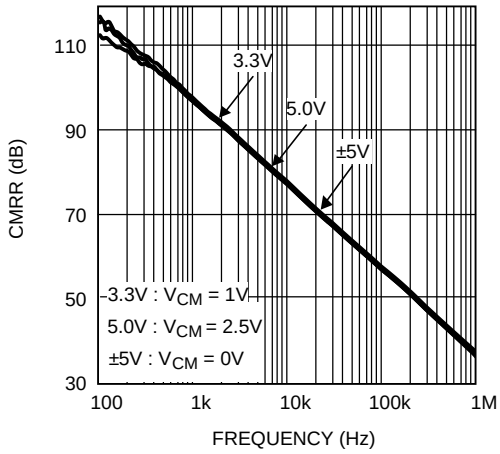

Figure 22. CMRR vs Frequency

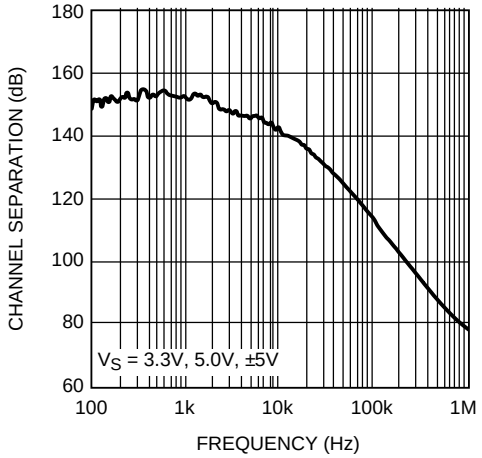

Figure 23. Channel Separation vs Frequency

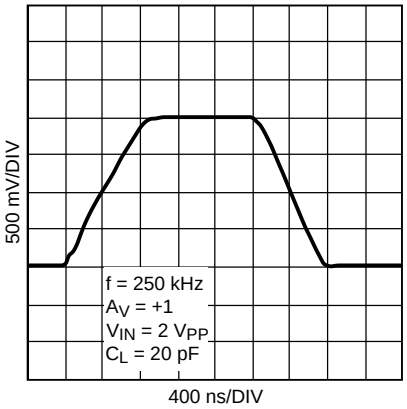

Figure 24. Large Signal Step Response With Gain = 1

Typical Characteristics (continued)

At T_A = 25°C, R_L = 10 kΩ, V_S = 5 V. Unless otherwise specified.

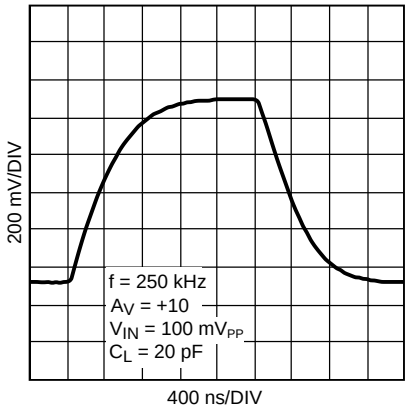

Figure 25. Large Signal Step Response With Gain = 10

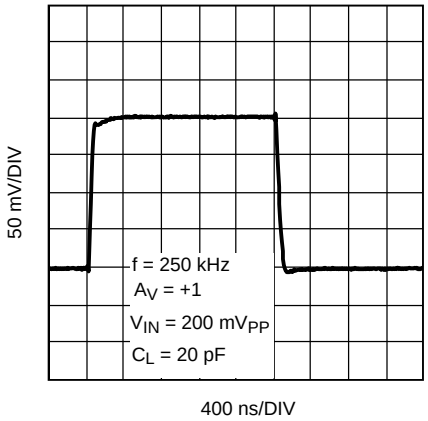

Figure 26. Small Signal Step Response With Gain = 1

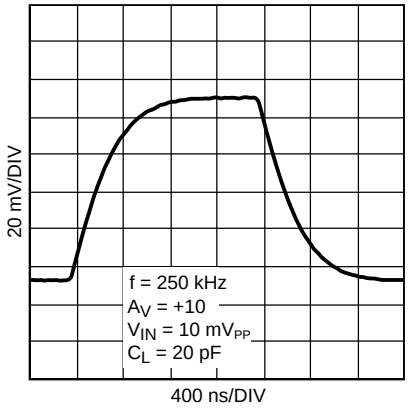

Figure 27. Small Signal Step Response With Gain = 10

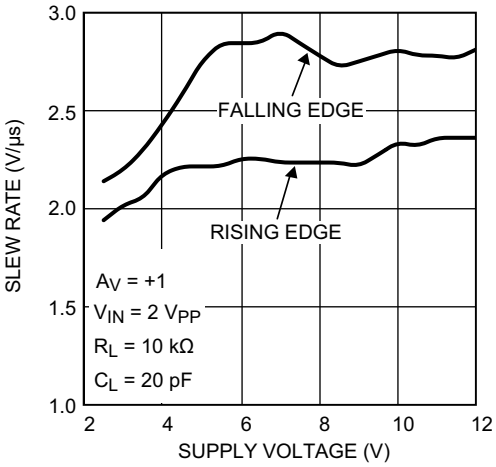

Figure 28. Slew Rate vs Supply Voltage

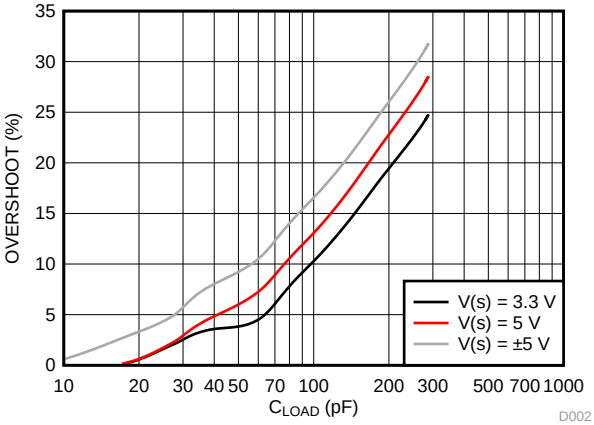

Figure 29. Overshoot vs C_L

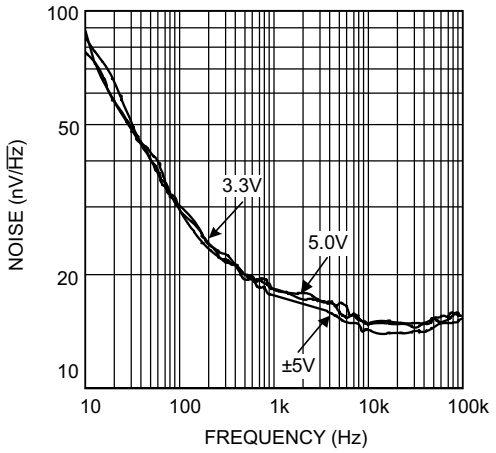

Figure 30. Input Voltage Noise vs Frequency

Copyright © 2017, Texas Instruments Incorporated

Typical Characteristics (continued)

At T_A = 25°C, R_L = 10 kΩ, V_S = 5 V. Unless otherwise specified.

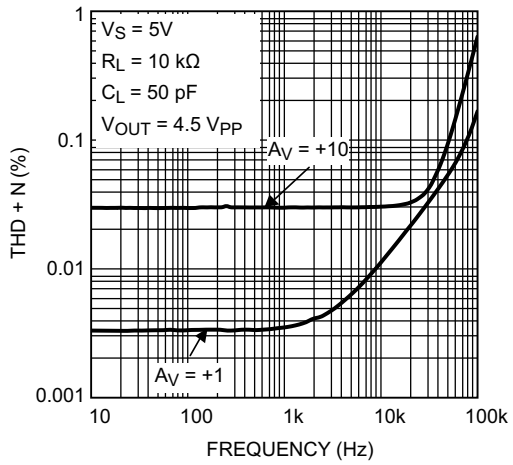

Figure 31. THD+N vs Frequency

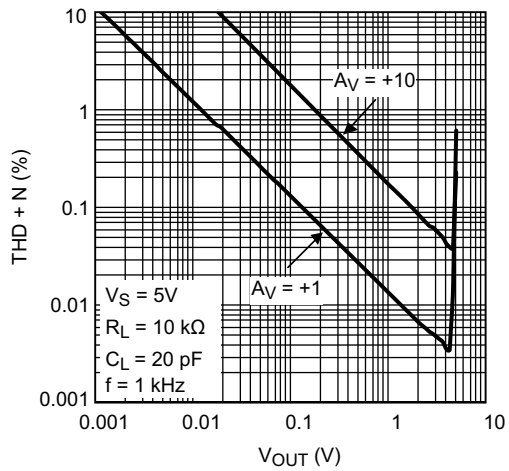

Figure 32. THD+N vs V_{OUT}

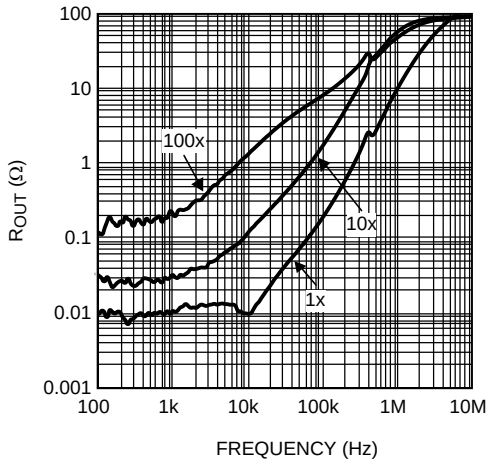

Figure 33. Closed-Loop Output Impedance vs Frequency

7 Detailed Description

7.1 Overview

The LMV84x-Q1 devices are operational amplifiers with near-precision specifications: low noise, low temperature drift, low offset, and rail-to-rail input and output. Possible application areas include instrumentation, medical, test equipment, audio, and automotive applications.

Its low supply current of 1 mA per amplifier, temperature range of −40°C to +125°C, 12-V supply with CMOS input, and the small SC70 package for the LMV841-Q1 make the LMV84x-Q1 a unique op amp family and a perfect choice for portable electronics.

7.2 Functional Block Diagram

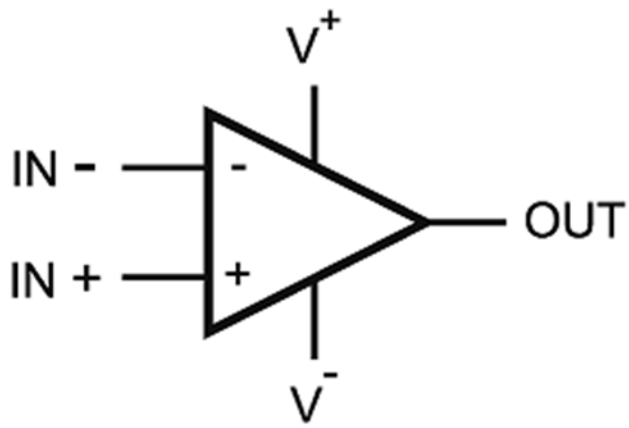

Copyright © 2016, Texas Instruments Incorporated

7.3 Feature Description

7.3.1 Input Protection

The LMV84x-Q1 devices have a set of anti-parallel diodes D_1 and D_2 between the input pins, as shown in Figure 34. These diodes are present to protect the input stage of the amplifier. At the same time, they limit the amount of differential input voltage that is allowed on the input pins.

A differential signal larger than one diode voltage drop can damage the diodes. The differential signal between the inputs needs to be limited to ±300 mV or the input current needs to be limited to ±10 mA.

NOTE

When the op amp is slewing, a differential input voltage exists that forward-biases the protection diodes. This may result in current being drawn from the signal source. While this current is already limited by the internal resistors R_1 and R_2 (both 130 Ω), a resistor of 1 kΩ can be placed in the feedback path, or a 500-Ω resistor can be placed in series with the input signal for further limitation.

Copyright © 2017, Texas Instruments Incorporated

Feature Description (continued)

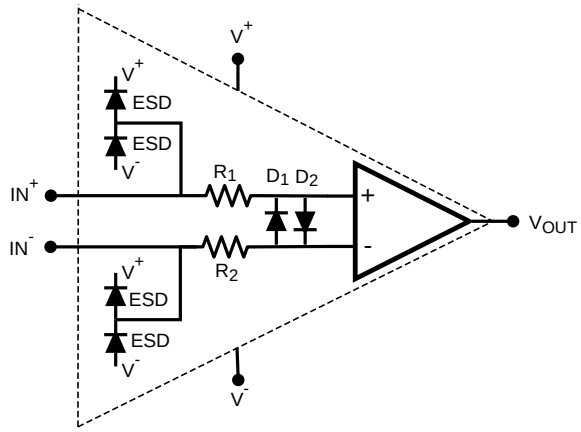

Figure 34. Protection Diodes Between the Input Pins

7.3.2 Input Stage

The input stage of this amplifier consists of both a PMOS and an NMOS input pair to achieve a rail-to-rail input range. For input voltages close to the negative rail, only the PMOS pair is active. Close to the positive rail, only the NMOS pair is active. In a transition region that extends from approximately 2 V below V^+ to 1 V below V^+, both pairs are active, and one pair gradually takes over from the other. In this transition region, the input-referred offset voltage changes from the offset voltage associated with the PMOS pair to that of the NMOS pair. The input pairs are trimmed independently to ensure an input offset voltage of less then 0.5 mV at room temperature over the complete rail-to-rail input range. This also significantly improves the CMRR of the amplifier in the transition region.

NOTE

The CMRR and PSRR limits in the tables are large-signal numbers that express the maximum variation of the input offset of the amplifier over the full common-mode voltage and supply voltage range, respectively. When the common-mode input voltage of the amplifier is within the transition region, the small signal CMRR and PSRR may be slightly lower than the large signal limits.

7.4 Device Functional Modes

7.4.1 Driving Capacitive Load

The LMV84x-Q1 can be connected as noninverting unity gain amplifiers. This configuration is the most sensitive to capacitive loading. The combination of a capacitive load placed on the output of an amplifier along with the output impedance of the amplifier creates a phase lag, which reduces the phase margin of the amplifier. If the phase margin is significantly reduced, the response is under-damped, which causes peaking in the transfer. When there is too much peaking, the op amp might start oscillating.

The LMV84x-Q1 can directly drive capacitive loads up to 100 pF without any stability issues. To drive heavier capacitive loads, an isolation resistor (R_{ISO}) must be used, as shown in Figure 35. By using this isolation resistor, the capacitive load is isolated from the output of the amplifier, and hence, the pole caused by C_L is no longer in the feedback loop. The larger the value of R_{ISO}, the more stable the output voltage is. If values of R_{ISO} are sufficiently large, the feedback loop is stable, independent of the value of C_L. However, larger values of R_{ISO} result in reduced output swing and reduced output current drive.

Device Functional Modes (continued)

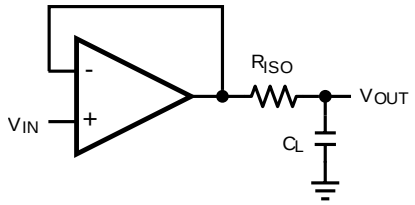

Figure 35. Isolating Capacitive Load

7.4.2 Noise Performance

The LMV84x-Q1 devices have good noise specifications and are frequently used in low-noise applications. Therefore it is important to determine the noise of the total circuit. Besides the input-referred noise of the op amp, the feedback resistors may have an important contribution to the total noise.

For applications with a voltage input configuration, in general it is beneficial general, beneficial to keep the resistor values low. In these configurations high resistor values mean high noise levels. However, using low resistor values will increase the power consumption of the application. This is not always acceptable for portable applications, so there is a trade-off between noise level and power consumption.

Besides the noise contribution of the signal source, three types of noise need to be taken into account for calculating the noise performance of an op amp circuit:

- Input-referred voltage noise of the op amp
- Input-referred current noise of the op amp
- Noise sources of the resistors in the feedback network, configuring the op amp

To calculate the noise voltage at the output of the op amp, the first step is to determine a total equivalent noise source. This requires the transformation of all noise sources to the same reference node. A convenient choice for this node is the input of the op amp circuit. The next step is to add all the noise sources. The final step is to multiply the total equivalent input voltage noise with the gain of the op amp configuration.

If the input-referred voltage noise of the op amp is already placed at the input, the user can use the input-referred voltage noise without further transferring. The input-referred current noise needs to be converted to an input-referred voltage noise. The current noise is negligibly small, as long as the equivalent resistance is not unrealistically large, so the user can leave the current noise out for these examples. That leaves the user with the noise sources of the resistors, being the thermal noise voltage. The influence of the resistors on the total noise can be seen in the following examples, one with high resistor values and one with low resistor values. Both examples describe an op amp configuration with a gain of 101 which gives the circuit a bandwidth of 44.5 kHz. The op amp noise is the same for both cases, that is, an input-referred noise voltage of 20 nV/$\sqrt{Hz}$ and a negligibly small input-referred noise current.

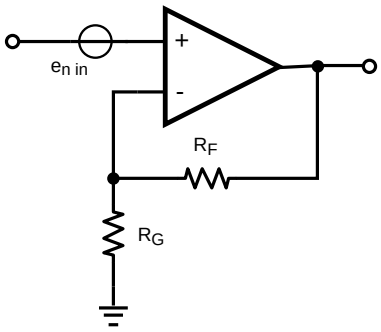

Figure 36. Noise Circuit

Copyright © 2017, Texas Instruments Incorporated

Device Functional Modes (continued)

To calculate the noise of the resistors in the feedback network, the equivalent input-referred noise resistance is needed. For the example in Figure 36, this equivalent resistance R_{eq} can be calculated using Equation 1:

$$R_{eq} = \frac{R_F \times R_G}{R_F + R_G} \tag{1}$$

The voltage noise of the equivalent resistance can be calculated using Equation 2:

$$e_{nr} = \sqrt{4kTR_{eq}}$$

where

- e_{nr} = thermal noise voltage of the equivalent resistor
- R_{eq} ($V/\sqrt{Hz}$)
- k = Boltzmann constant (1.38 x 10^{-23} J/K)
- T = absolute temperature (K)
- R_{eq} = resistance (Ω) (2)

The total equivalent input voltage noise is given by Equation 3:

$$e_{n\ in} = \sqrt{e_{nv}^{\ 2} + e_{nr}^{\ 2}}$$

where

- $e_{n\ in}$ = total input equivalent voltage noise of the circuit
- e_{nv} = input voltage noise of the op amp (3)

The final step is multiplying the total input voltage noise by the noise gain using Equation 4, which is in this case the gain of the op amp configuration:

$$e_{n\ out} = e_{n\ in} \times A_{noise} \tag{4}$$

The equivalent resistance for the first example with a resistor R_F of 10 MΩ and a resistor R_G of 100 kΩ at 25°C (298 K) equals Equation 5:

$$R_{eq} = \frac{R_F \times R_G}{R_F + R_G} = \frac{10\ M\Omega \times 100\ k\Omega}{10\ M\Omega + 100\ k\Omega} = 99\ k\Omega \tag{5}$$

Now the noise of the resistors can be calculated using Equation 6, yielding:

$$\begin{aligned} e_{nr} &= \sqrt{4kTR_{eq}} \\ &= \sqrt{4 \times 1.38 \times 10^{-23} J/K \times 298K \times 99\ k\Omega} \\ &= 40\ nV/\sqrt{Hz} \end{aligned} \tag{6}$$

The total noise at the input of the op amp is calculated in Equation 7:

$$\begin{aligned} e_{n\ in} &= \sqrt{e_{nv}^{\ 2} + e_{nr}^{\ 2}} \\ &= \sqrt{(20\ nV/\sqrt{Hz})^2 + (40\ nV/\sqrt{Hz})^2} = 45\ nV/\sqrt{Hz} \end{aligned} \tag{7}$$

For the first example, this input noise, multiplied with the noise gain, in Equation 8 gives a total output noise of:

$$\begin{aligned} e_{n\ out} &= e_{n\ in} \times A_{noise} \\ &= 45\ nV/\sqrt{Hz} \times 101 = 4.5\ \mu V/\sqrt{Hz} \end{aligned} \tag{8}$$

In the second example, with a resistor R_F of 10 kΩ and a resistor R_G of 100 Ω at 25°C (298 K), the equivalent resistance equals Equation 9:

$$R_{eq} = \frac{R_F \times R_G}{R_F + R_G} = \frac{10\ k\Omega \times 100\ \Omega}{10\ k\Omega + 100\ \Omega} = 99\ \Omega \tag{9}$$

The resistor noise for the second example is calculated in Equation 10:

Device Functional Modes (continued)

$$e_{nr} = \sqrt{4kTR_{eq}}$$
$$= \sqrt{4 \times 1.38 \times 10^{-23} J/K \times 298\ K \times 99\ \Omega}$$
$$= 1\ nV/\sqrt{Hz} \quad (10)$$

The total noise at the input of the op amp is calculated in Equation 10:

$$e_{n\ in} = \sqrt{e_{nv}^{\ 2} + e_{nr}^{\ 2}}$$
$$= \sqrt{(20\ nV/\sqrt{Hz})^2 + (1\ nV/\sqrt{Hz})^2}$$
$$= 20\ nV/\sqrt{Hz} \quad (11)$$

For the second example the input noise, multiplied with the noise gain, in Equation 12 gives an output noise of:

$$e_{n\ out} = e_{n\ in} \times A_{noise}$$
$$= 20\ nV/\sqrt{Hz} \times 101 = 2\ \mu V/\sqrt{Hz} \quad (12)$$

In the first example the noise is dominated by the resistor noise due to the very high resistor values, in the second example the very low resistor values add only a negligible contribution to the noise and now the dominating factor is the op amp itself. When selecting the resistor values, it is important to choose values that do not add extra noise to the application. Choosing values above 100 kΩ may increase the noise too much. Low values keep the noise within acceptable levels; choosing very low values however, does not make the noise even lower, but can increase the current of the circuit.

7.5 Interfacing to High Impedance Sensor

With CMOS inputs, the LMV84x-Q1 are particularly suited to be used as high impedance sensor interfaces.

Many sensors have high source impedances that may range up to 10 MΩ. The input bias current of an amplifier loads the output of the sensor, and thus cause a voltage drop across the source resistance, as shown in Figure 37. When an op amp is selected with a relatively high input bias current, this error may be unacceptable.

The low input current of the LMV84x-Q1 significantly reduces such errors. The following examples show the difference between a standard op amp input and the CMOS input of the LMV84x-Q1.

The voltage at the input of the op amp can be calculated with Equation 13:

$$V_{IN+} = V_S - I_B \times R_S \quad (13)$$

For a standard op amp, the input bias Ib can be 10 nA. When the sensor generates a signal of 1 V (V_S) and the sensors impedance is 10 MΩ (R_S), the signal at the op amp input is calculated in Equation 14:

$$V_{IN} = 1\ V - 10\ nA \times 10\ M\Omega = 1\ V - 0.1\ V = 0.9\ V \quad (14)$$

For the CMOS input of the LMV84x-Q1, which has an input bias current of only 0.3 pA, this would give Equation 15:

$$V_{IN} = 1\ V - 0.3\ pA \times 10\ M\Omega = 1\ V - 3\ \mu V = 0.999997\ V \quad (15)$$

The conclusion is that a standard op amp, with its high input bias current input, is not a good choice for use in impedance sensor applications. The LMV84x-Q1 devices, in contrast, are much more suitable due to the low input bias current. The error is negligibly small; therefore, the LMV84x-Q1 are a must for use with high-impedance sensors.

Copyright © 2017, Texas Instruments Incorporated

Interfacing to High Impedance Sensor (continued)

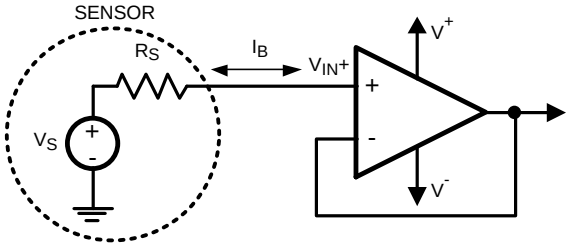

Figure 37. High Impedance Sensor Interface

8 Application and Implementation

NOTE

Information in the following applications sections is not part of the TI component specification, and TI does not warrant its accuracy or completeness. TI's customers are responsible for determining suitability of components for their purposes. Customers should validate and test their design implementation to confirm system functionality.

8.1 Application Information

The rail-to-rail input and output of the LMV84x-Q1 and the wide supply voltage range make these amplifiers ideal to use in numerous applications. Three sample applications, namely the active filter circuit, high-side current sensing, and thermocouple sensor interface, are provided in the *Typical Applications* section.

8.2 Typical Applications

8.2.1 Active Filter Circuit

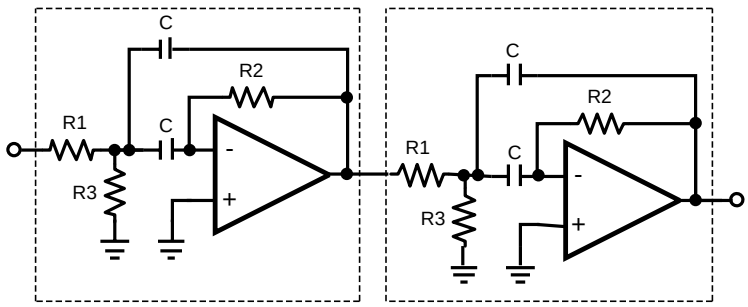

Figure 38. Active Band-Pass Filter Implementation

8.2.1.1 Design Requirements

In this example it is required to design a bandpass filter with band-pass frequency of 10 kHz, and a center frequence of approximately 10% from the total frequence of the filter. This is achieved by cascading two band-pass filters, A and B, with slightly different center frequencies.

8.2.1.2 Detailed Design Procedure

The center frequency of the separate band-pass filters A, and B can be calculated by Equation 16:

$$f_{mid} = \frac{1}{2\pi C}\sqrt{\frac{R_1 + R_3}{R_1 R_2 R_3}}$$

where

- C = 33 nF
- R1 = 2 KΩ
- R2 = 6.2 KΩ
- and R3 = 45 Ω (16)

This gives Equation 17 for filter A:

$$f_{mid} = \frac{1}{\pi \times 33\ nF}\sqrt{\frac{2\ k\Omega + 6.2\ k\Omega}{2\ k\Omega \times 6.2\ k\Omega \times 45\ k\Omega}} = 9.2\ kHz \quad (17)$$

and Equation 18 for filter B with C = 27nF:

$$f_{mid} = \frac{1}{\pi \times 27\ nF}\sqrt{\frac{2\ k\Omega + 6.2\ k\Omega}{2\ k\Omega \times 6.2\ k\Omega \times 45\ k\Omega}} = 11.2\ kHz \quad (18)$$

Bandwidth can be calculated by Equation 19:

Copyright © 2017, Texas Instruments Incorporated

Typical Applications (continued)

$$B = \frac{1}{\pi R_2 C} \tag{19}$$

For filter A, this gives Equation 20:

$$B = \frac{1}{\pi \times 6.2\ k\Omega \times 33\ nF} = 1.6\ kHz \tag{20}$$

and Equation 21 for filter B:

$$B = \frac{1}{\pi \times 6.2\ k\Omega \times 27\ nF} = 1.9\ kHz \tag{21}$$

8.2.1.3 Application Curve

The responses of filter A and filter B are shown as the thin lines in Figure 39; the response of the combined filter is shown as the thick line. Shifting the center frequencies of the separate filters farther apart, results in a wider band; however, positioning the center frequencies too far apart results in a less flat gain within the band. For wider bands more band-pass filters can be cascaded.

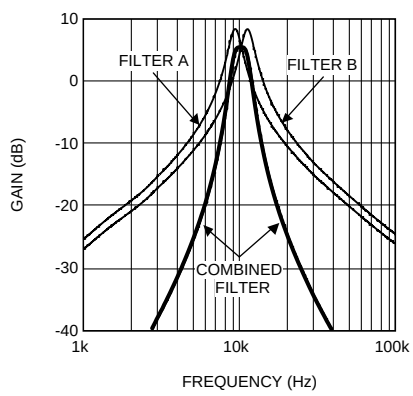

Figure 39. Active Band-Pass Filter Curve

NOTE

Use the WEBENCH internet tools at www.ti.com for your filter application.

8.2.2 High-Side, Current-Sensing Circuit

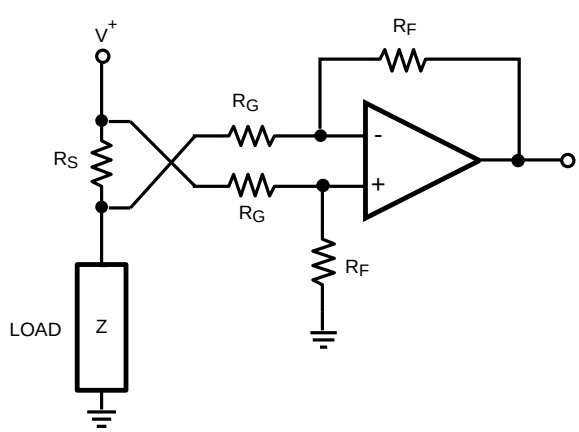

Figure 40. High-Side, Current-Sensing Circuit

Typical Applications (continued)

8.2.2.1 Design Requirements

In this example, it is desired to measure a current between 0 A and 2 A using a sense resistor of 100 mΩ, and convert it to an output voltage of 0 to 5 V. A current of 2 A flowing through the load and the sense resistor results in a voltage of 200 mV across the sense resistor. The op amp amplifies this 200 mV to fit the current range to the output voltage range.

8.2.2.2 Detailed Design Procedure

To measure current at a point in a circuit, a sense resistor is placed in series with the load, as shown in Figure 40. The current flowing through this sense resistor results in a voltage drop, that is amplified by the op amp. The rail-to-rail input and the low V_{OS} features make the LMV84x-Q1 ideal op amps for high-side, current-sensing applications.

The input and the output relation of the circuit is given by Equation 22:

$$V_{OUT} = R_F/R_G \times V_{SENSE} \tag{22}$$

For a load current of 2 A and an output voltage of 5 V the gain would be $V_{OUT} / V_{SENSE} = 25$.

If the feedback resistor, R_F, is 100 kΩ, then the value for R_G is 4 kΩ. The tolerance of the resistors has to be low to obtain a good common-mode rejection.

8.2.3 Thermocouple Sensor Signal Amplification

Figure 41 is a typical example for a thermocouple amplifier application using an LMV841-Q1, LMV842-Q1, or LMV844-Q1. A thermocouple senses a temperature and converts it into a voltage. This signal is then amplified by the LMV841-Q1, LMV842-Q1, or LMV844-Q1. An ADC can then convert the amplified signal to a digital signal. For further processing the digital signal can be processed by a microprocessor, and can be used to display or log the temperature, or the temperature data can be used in a fabrication process.

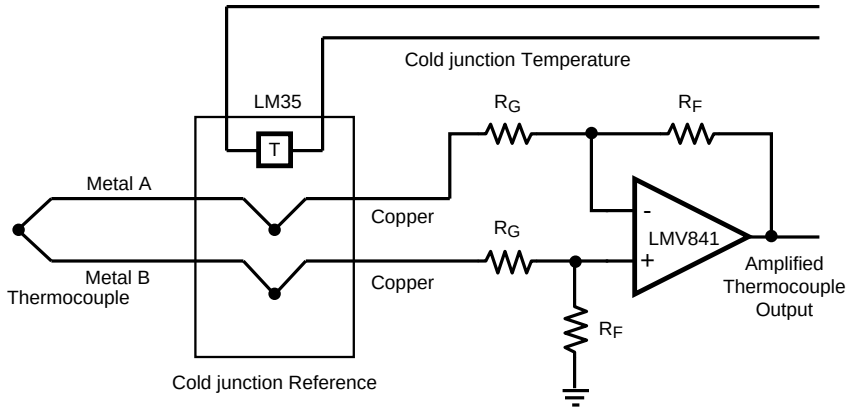

Figure 41. Thermocouple Sensor Interface

8.2.3.1 Design Requirements

In this example it is desired to measure temperature in the range of 0°C to 500°C with a resolution of 0.5°C using a K-type thermocouple sensor. The power supply for both the LMV84x-Q1 and the ADC is 3.3 V.

8.2.3.2 Detailed Design Procedure

A thermocouple is a junction of two different metals. These metals produce a small voltage that increases with temperature. A K-type thermocouple is a very common temperature sensor made of a junction between nickel-chromium and nickel-aluminum. There are several reasons for using the K-type thermocouple. These include temperature range, the linearity, the sensitivity, and the cost.

Copyright © 2017, Texas Instruments Incorporated

Typical Applications (continued)

A K-type thermocouple has a wide temperature range. The range of this thermocouple is from approximately −200°C to approximately 1200°C, as can be seen in Figure 42. This covers the generally used temperature ranges.

Over the main part of the range the behavior is linear. This is important for converting the analog signal to a digital signal. The K-type thermocouple has good sensitivity when compared to many other types; the sensitivity is 41 µV/°C. Lower sensitivity requires more gain and makes the application more sensitive to noise. In addition, a K-type thermocouple is not expensive, many other thermocouples consist of more expensive materials or are more difficult to produce.

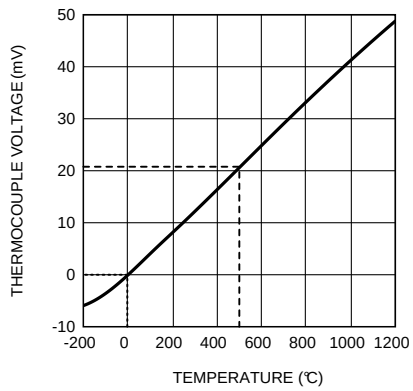

Figure 42. K-Type Thermocouple Response

The temperature range of 0°C to 500°C results in a voltage range from 0 mV to 20.6 mV produced by the thermocouple. This is shown in Figure 42.

To obtain the best accuracy the full ADC range of 0 to 3.3 V is used and the gain needed for this full range can be calculated Equation 23:

$$A_V = 3.3\ V / 0.0206\ V = 160 \tag{23}$$

If R_G is 2 kΩ, then the value for R_F can be calculated with this gain of 160. Because $A_V = R_F / R_G$, R_F can be calculated in Equation 24:

$$R_F = A_V \times R_G = 160 \times 2\ k\Omega = 320\ k\Omega \tag{24}$$

To achieve a resolution of 0.5°C a step smaller than the minimum resolution is needed. This means that at least 1000 steps are necessary (500°C/0.5°C). A 10-bit ADC would be sufficient as this gives 1024 steps. A 10-bit ADC such as the two channel 10-bit ADC102S021 would be a good choice.

At the point where the thermocouple wires are connected to the circuit on the PCB unwanted parasitic thermocouple is formed, introducing error in the measurements of the actual thermocouple sensor.

Using an isothermal block as a reference will compensate for this additional thermocouple effect. An isothermal block is a good heat conductor. This means that the two thermocouple connections both have the same temperature. The temperature of the isothermal block can be measured, and thereby the temperature of the thermocouple connections. This is usually called the cold junction reference temperature. In the example, an LM35 is used to measure this temperature. This semiconductor temperature sensor can accurately measure temperatures from −55°C to 150°C.

The ADC in this example also coverts the signal from the LM35 to a digital signal, hence, the microprocessor can compensate for the amplified thermocouple signal of the unwanted thermocouple junction at the connector.

Copyright © 2017, Texas Instruments Incorporated

9 Power Supply Recommendations

The LMV84x-Q1 is specified for operation from 2.7 V to 12 V (±1.35 V to ±6 V) over a –40°C to 125°C temperature range. Parameters that can exhibit significant variance with regard to operating voltage or temperature are presented in the *Absolute Maximum Ratings*.

CAUTION

Supply voltages larger than 13.2 V can permanently damage the device.

For proper operation, the power supplies must be properly decoupled. For decoupling the supply lines, TI suggests placing 10-nF capacitors as close as possible to the operational amplifier power supply pins. For single supply, place a capacitor between V^+ and V^- supply leads. For dual supplies, place one capacitor between V^+ and ground, and one capacitor between V^- and ground.

10 Layout

10.1 Layout Guidelines

- The V+ pin must be bypassed to ground with a low-ESR capacitor.
- The optimum placement is closest to the V+ and ground pins.
- Take care to minimize the loop area formed by the bypass capacitor connection between V+ and ground.
- The ground pin must be connected to the PCB ground plane at the pin of the device.
- The feedback components must be placed as close to the device as possible to minimize strays.

10.2 Layout Example

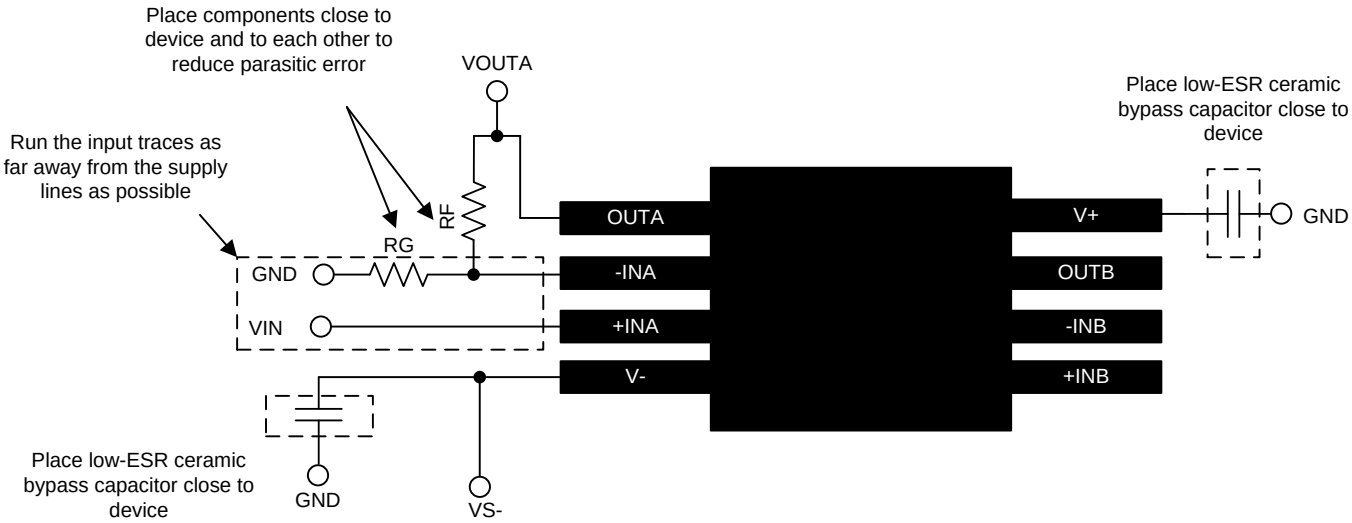

Figure 43. Layout Example (Top View)

Copyright © 2017, Texas Instruments Incorporated

11 Device and Documentation Support

11.1 Related Links

The table below lists quick access links. Categories include technical documents, support and community resources, tools and software, and quick access to order now.

Table 1. Related Links

PARTS	PRODUCT FOLDER	ORDER NOW	TECHNICAL DOCUMENTS	TOOLS & SOFTWARE	SUPPORT & COMMUNITY
LMV841-Q1	Click here	Click here	Click here	Click here	Click here
LMV842-Q1	Click here	Click here	Click here	Click here	Click here
LMV844-Q1	Click here	Click here	Click here	Click here	Click here

11.2 Receiving Notification of Documentation Updates

To receive notification of documentation updates, navigate to the device product folder on ti.com. In the upper right corner, click on *Alert me* to register and receive a weekly digest of any product information that has changed. For change details, review the revision history included in any revised document.

11.3 Community Resources

The following links connect to TI community resources. Linked contents are provided "AS IS" by the respective contributors. They do not constitute TI specifications and do not necessarily reflect TI's views; see TI's Terms of Use.

TI E2E™ Online Community ***TI's Engineer-to-Engineer (E2E) Community.*** Created to foster collaboration among engineers. At e2e.ti.com, you can ask questions, share knowledge, explore ideas and help solve problems with fellow engineers.

Design Support ***TI's Design Support*** Quickly find helpful E2E forums along with design support tools and contact information for technical support.

11.4 Trademarks

E2E is a trademark of Texas Instruments.
All other trademarks are the property of their respective owners.

11.5 Electrostatic Discharge Caution

These devices have limited built-in ESD protection. The leads should be shorted together or the device placed in conductive foam during storage or handling to prevent electrostatic damage to the MOS gates.

11.6 Glossary

SLYZ022 — *TI Glossary*.

This glossary lists and explains terms, acronyms, and definitions.

12 Mechanical, Packaging, and Orderable Information

The following pages include mechanical, packaging, and orderable information. This information is the most current data available for the designated devices. This data is subject to change without notice and revision of this document. For browser-based versions of this data sheet, refer to the left-hand navigation.

PACKAGING INFORMATION

Orderable part number	Status (1)	Material type (2)	Package | Pins	Package qty | Carrier	RoHS (3)	Lead finish/ Ball material (4)	MSL rating/ Peak reflow (5)	Op temp (°C)	Part marking (6)
LMV841QMG/NOPB	Active	Production	SC70 (DCK) | 5	1000 | SMALL T&R	Yes	SN	Level-1-260C-UNLIM	-40 to 125	ATA
LMV841QMG/NOPB.A	Active	Production	SC70 (DCK) | 5	1000 | SMALL T&R	Yes	SN	Level-1-260C-UNLIM	-40 to 125	ATA
LMV841QMGX/NOPB	Active	Production	SC70 (DCK) | 5	3000 | LARGE T&R	Yes	SN	Level-1-260C-UNLIM	-40 to 125	ATA
LMV841QMGX/NOPB.A	Active	Production	SC70 (DCK) | 5	3000 | LARGE T&R	Yes	SN	Level-1-260C-UNLIM	-40 to 125	ATA
LMV842QMA/NOPB	Active	Production	SOIC (D) | 8	95 | TUBE	Yes	SN	Level-1-260C-UNLIM	-40 to 125	LMV84 2QMA
LMV842QMA/NOPB.A	Active	Production	SOIC (D) | 8	95 | TUBE	Yes	SN	Level-1-260C-UNLIM	-40 to 125	LMV84 2QMA
LMV842QMAX/NOPB	Active	Production	SOIC (D) | 8	2500 | LARGE T&R	Yes	SN	Level-1-260C-UNLIM	-40 to 125	LMV84 2QMA
LMV842QMAX/NOPB.A	Active	Production	SOIC (D) | 8	2500 | LARGE T&R	Yes	SN	Level-1-260C-UNLIM	-40 to 125	LMV84 2QMA
LMV842QMM/NOPB	Active	Production	VSSOP (DGK) | 8	1000 | SMALL T&R	Yes	SN	Level-1-260C-UNLIM	-40 to 125	AA7A
LMV842QMM/NOPB.A	Active	Production	VSSOP (DGK) | 8	1000 | SMALL T&R	Yes	SN	Level-1-260C-UNLIM	-40 to 125	AA7A
LMV842QMMX/NOPB	Active	Production	VSSOP (DGK) | 8	3500 | LARGE T&R	Yes	SN	Level-1-260C-UNLIM	-40 to 125	AA7A
LMV842QMMX/NOPB.A	Active	Production	VSSOP (DGK) | 8	3500 | LARGE T&R	Yes	SN	Level-1-260C-UNLIM	-40 to 125	AA7A
LMV844QMA/NOPB	Active	Production	SOIC (D) | 14	55 | TUBE	Yes	NIPDAU | SN	Level-1-260C-UNLIM	-40 to 125	LMV844 QMA
LMV844QMA/NOPB.A	Active	Production	SOIC (D) | 14	55 | TUBE	Yes	NIPDAU	Level-1-260C-UNLIM	-40 to 125	LMV844 QMA
LMV844QMAX/NOPB	Active	Production	SOIC (D) | 14	2500 | LARGE T&R	Yes	NIPDAU | SN	Level-1-260C-UNLIM	-40 to 125	LMV844 QMA
LMV844QMAX/NOPB.A	Active	Production	SOIC (D) | 14	2500 | LARGE T&R	Yes	NIPDAU	Level-1-260C-UNLIM	-40 to 125	LMV844 QMA

(1) **Status:** For more details on status, see our product life cycle.

(2) **Material type:** When designated, preproduction parts are prototypes/experimental devices, and are not yet approved or released for full production. Testing and final process, including without limitation quality assurance, reliability performance testing, and/or process qualification, may not yet be complete, and this item is subject to further changes or possible discontinuation. If available for ordering, purchases will be subject to an additional waiver at checkout, and are intended for early internal evaluation purposes only. These items are sold without warranties of any kind.

(3) **RoHS values:** Yes, No, RoHS Exempt. See the TI RoHS Statement for additional information and value definition.

(4) **Lead finish/Ball material:** Parts may have multiple material finish options. Finish options are separated by a vertical ruled line. Lead finish/Ball material values may wrap to two lines if the finish value exceeds the maximum column width.

(5) **MSL rating/Peak reflow:** The moisture sensitivity level ratings and peak solder (reflow) temperatures. In the event that a part has multiple moisture sensitivity ratings, only the lowest level per JEDEC standards is shown. Refer to the shipping label for the actual reflow temperature that will be used to mount the part to the printed circuit board.

(6) **Part marking:** There may be an additional marking, which relates to the logo, the lot trace code information, or the environmental category of the part.

Multiple part markings will be inside parentheses. Only one part marking contained in parentheses and separated by a "~" will appear on a part. If a line is indented then it is a continuation of the previous line and the two combined represent the entire part marking for that device.

Important Information and Disclaimer: The information provided on this page represents TI's knowledge and belief as of the date that it is provided. TI bases its knowledge and belief on information provided by third parties, and makes no representation or warranty as to the accuracy of such information. Efforts are underway to better integrate information from third parties. TI has taken and continues to take reasonable steps to provide representative and accurate information but may not have conducted destructive testing or chemical analysis on incoming materials and chemicals. TI and TI suppliers consider certain information to be proprietary, and thus CAS numbers and other limited information may not be available for release.

In no event shall TI's liability arising out of such information exceed the total purchase price of the TI part(s) at issue in this document sold by TI to Customer on an annual basis.

OTHER QUALIFIED VERSIONS OF LMV841-Q1, LMV842-Q1, LMV844-Q1 :

- Catalog : LMV841, LMV842, LMV844

NOTE: Qualified Version Definitions:

- Catalog - TI's standard catalog product

TAPE AND REEL INFORMATION

REEL DIMENSIONS

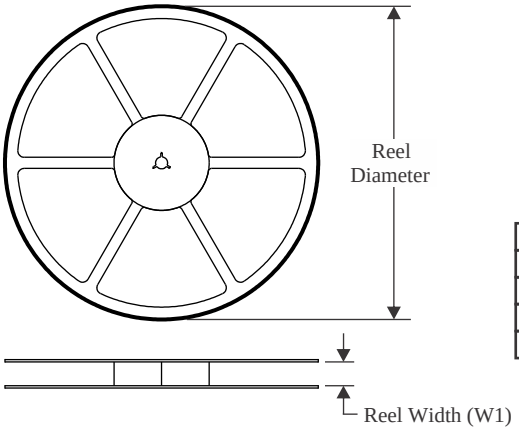

TAPE DIMENSIONS

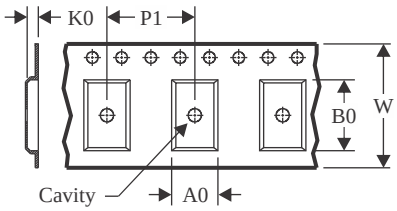

A0	Dimension designed to accommodate the component width
B0	Dimension designed to accommodate the component length
K0	Dimension designed to accommodate the component thickness
W	Overall width of the carrier tape
P1	Pitch between successive cavity centers

QUADRANT ASSIGNMENTS FOR PIN 1 ORIENTATION IN TAPE

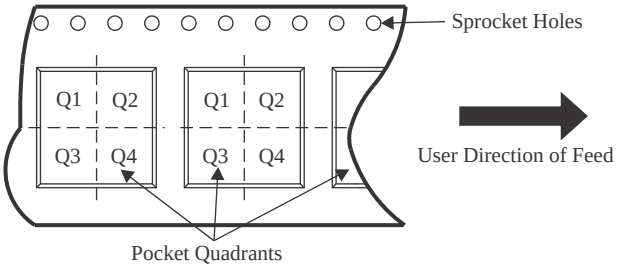

*All dimensions are nominal

Device	Package Type	Package Drawing	Pins	SPQ	Reel Diameter (mm)	Reel Width W1 (mm)	A0 (mm)	B0 (mm)	K0 (mm)	P1 (mm)	W (mm)	Pin1 Quadrant
LMV841QMG/NOPB	SC70	DCK	5	1000	178.0	8.4	2.25	2.45	1.2	4.0	8.0	Q3
LMV841QMGX/NOPB	SC70	DCK	5	3000	178.0	8.4	2.25	2.45	1.2	4.0	8.0	Q3
LMV842QMAX/NOPB	SOIC	D	8	2500	330.0	12.4	6.5	5.4	2.0	8.0	12.0	Q1
LMV842QMM/NOPB	VSSOP	DGK	8	1000	178.0	12.4	5.3	3.4	1.4	8.0	12.0	Q1
LMV842QMMX/NOPB	VSSOP	DGK	8	3500	330.0	12.4	5.3	3.4	1.4	8.0	12.0	Q1
LMV844QMAX/NOPB	SOIC	D	14	2500	330.0	16.4	6.5	9.35	2.3	8.0	16.0	Q1

TAPE AND REEL BOX DIMENSIONS

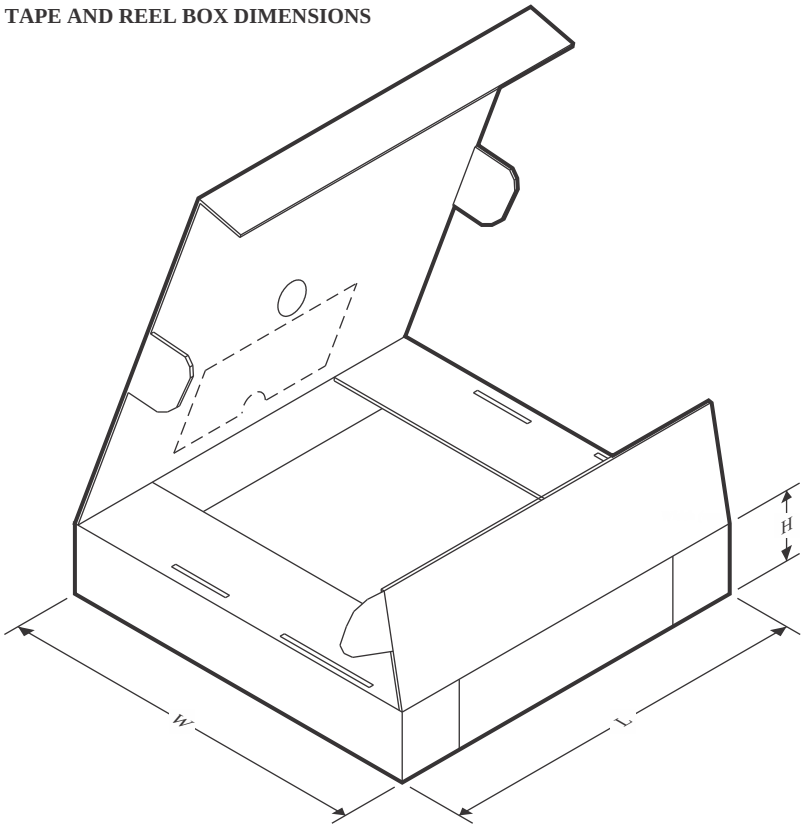

*All dimensions are nominal

Device	Package Type	Package Drawing	Pins	SPQ	Length (mm)	Width (mm)	Height (mm)
LMV841QMG/NOPB	SC70	DCK	5	1000	208.0	191.0	35.0
LMV841QMGX/NOPB	SC70	DCK	5	3000	208.0	191.0	35.0
LMV842QMAX/NOPB	SOIC	D	8	2500	367.0	367.0	35.0
LMV842QMM/NOPB	VSSOP	DGK	8	1000	208.0	191.0	35.0
LMV842QMMX/NOPB	VSSOP	DGK	8	3500	367.0	367.0	35.0
LMV844QMAX/NOPB	SOIC	D	14	2500	367.0	367.0	35.0

TUBE

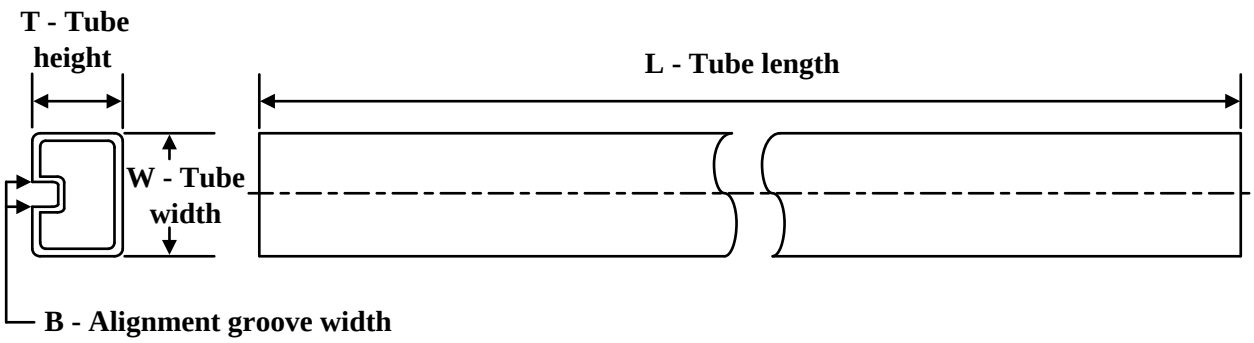

*All dimensions are nominal

Device	Package Name	Package Type	Pins	SPQ	L (mm)	W (mm)	T (µm)	B (mm)
LMV842QMA/NOPB	D	SOIC	8	95	495	8	4064	3.05
LMV842QMA/NOPB.A	D	SOIC	8	95	495	8	4064	3.05
LMV844QMA/NOPB	D	SOIC	14	55	495	8	4064	3.05
LMV844QMA/NOPB.A	D	SOIC	14	55	495	8	4064	3.05

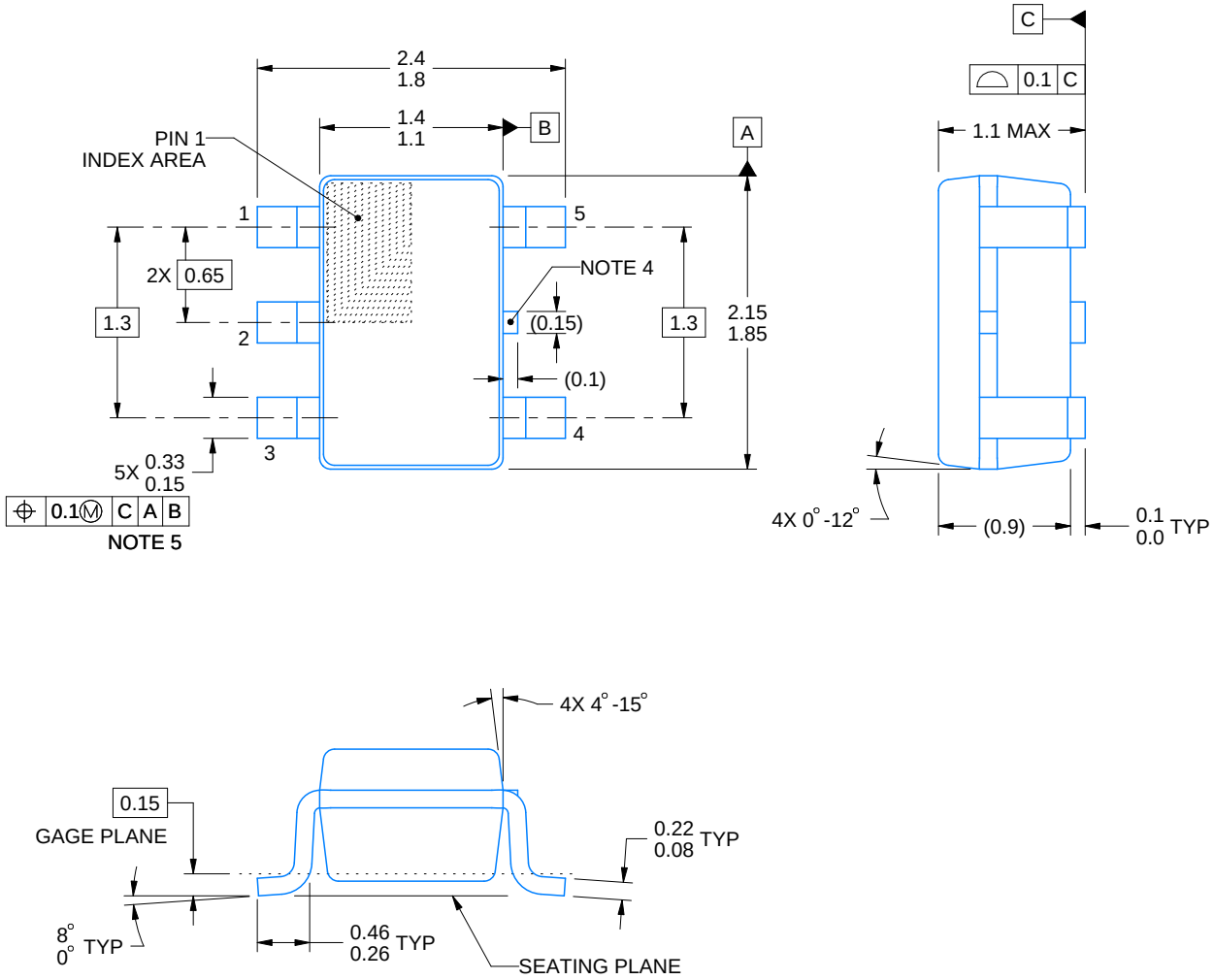

NOTES:

1. All linear dimensions are in millimeters. Any dimensions in parenthesis are for reference only. Dimensioning and tolerancing per ASME Y14.5M.
2. This drawing is subject to change without notice.
3. Refernce JEDEC MO-203.
4. Support pin may differ or may not be present.
5. Lead width does not comply with JEDEC.
6. Body dimensions do not include mold flash, protrusions, or gate burrs. Mold flash, protrusions, or gate burrs shall not exceed 0.25mm per side

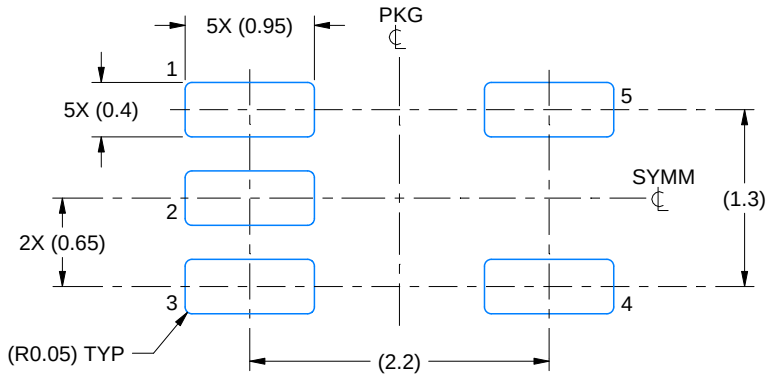

LAND PATTERN EXAMPLE
EXPOSED METAL SHOWN
SCALE:18X

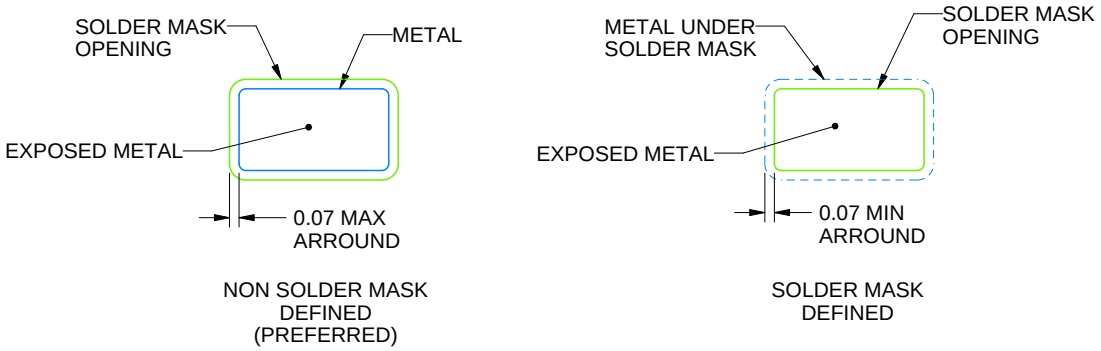

SOLDER MASK DETAILS

4214834/G 11/2024

NOTES: (continued)

7. Publication IPC-7351 may have alternate designs.
8. Solder mask tolerances between and around signal pads can vary based on board fabrication site.

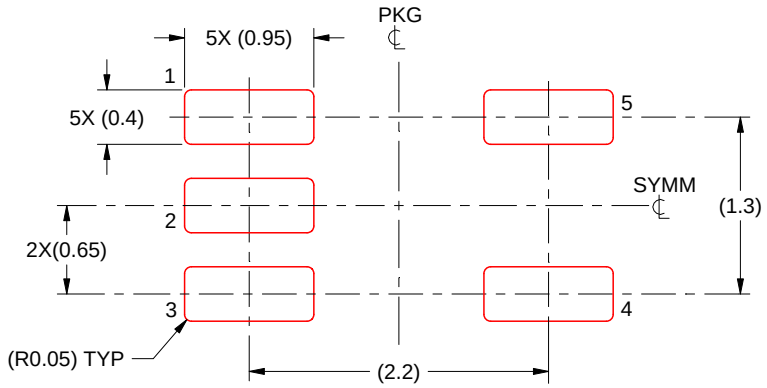

SOLDER PASTE EXAMPLE
BASED ON 0.125 THICK STENCIL
SCALE:18X

4214834/G 11/2024

NOTES: (continued)

9. Laser cutting apertures with trapezoidal walls and rounded corners may offer better paste release. IPC-7525 may have alternate design recommendations.
10. Board assembly site may have different recommendations for stencil design.

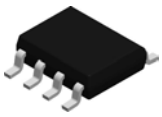

PACKAGE OUTLINE

D0008A

SOIC - 1.75 mm max height

SMALL OUTLINE INTEGRATED CIRCUIT

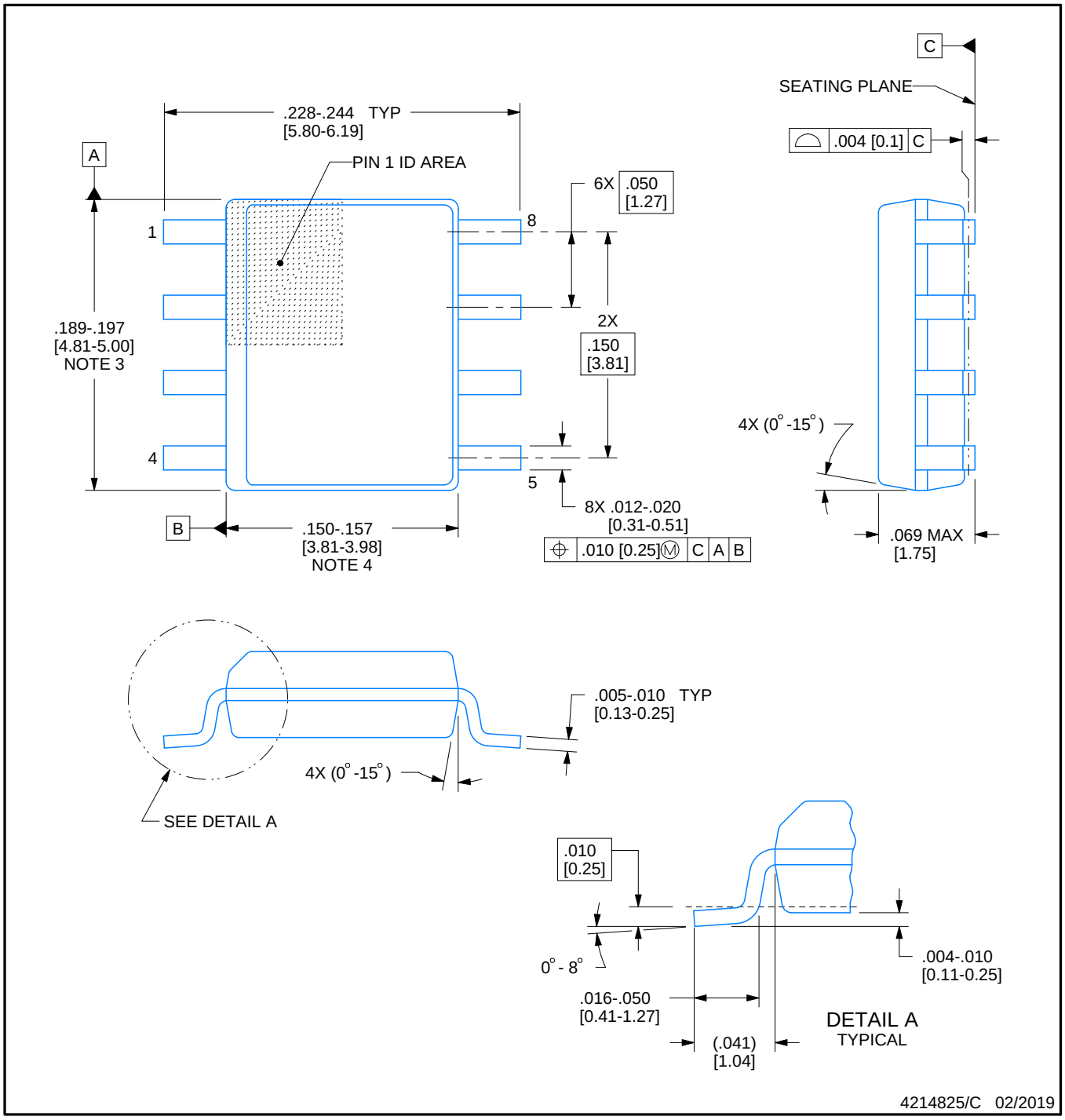

NOTES:

1. Linear dimensions are in inches [millimeters]. Dimensions in parenthesis are for reference only. Controlling dimensions are in inches. Dimensioning and tolerancing per ASME Y14.5M.
2. This drawing is subject to change without notice.
3. This dimension does not include mold flash, protrusions, or gate burrs. Mold flash, protrusions, or gate burrs shall not exceed .006 [0.15] per side.
4. This dimension does not include interlead flash.
5. Reference JEDEC registration MS-012, variation AA.

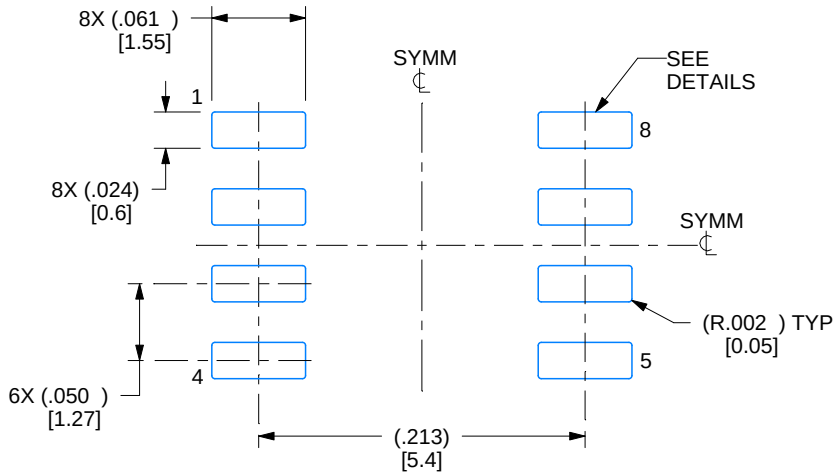

LAND PATTERN EXAMPLE
EXPOSED METAL SHOWN
SCALE:8X

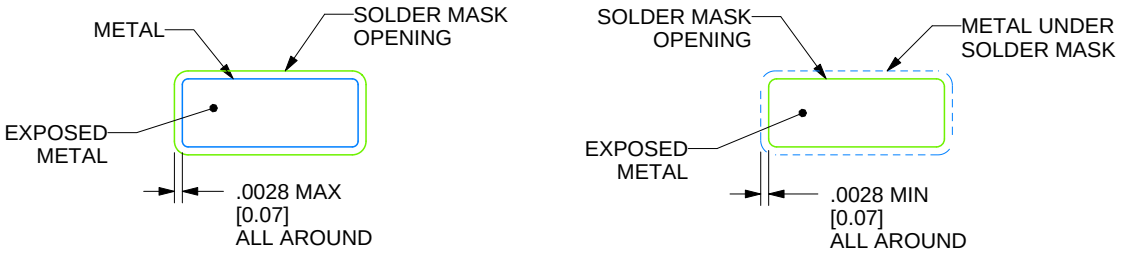

SOLDER MASK DETAILS

4214825/C 02/2019

NOTES: (continued)

6. Publication IPC-7351 may have alternate designs.
7. Solder mask tolerances between and around signal pads can vary based on board fabrication site.

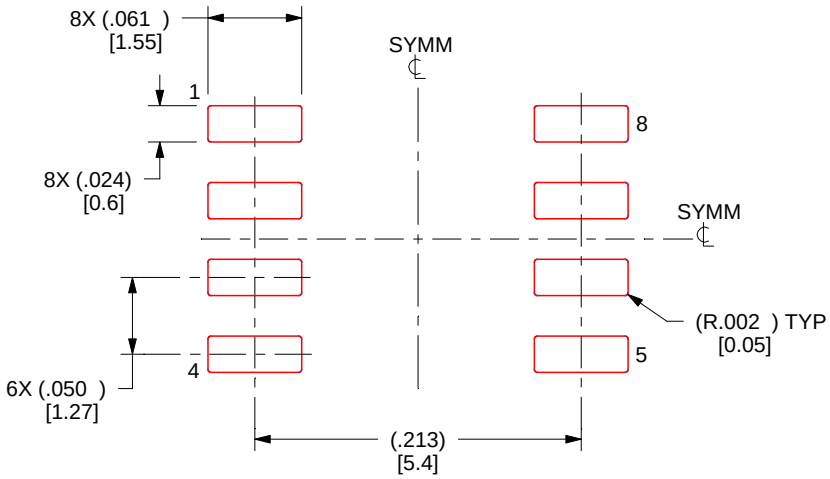

SOLDER PASTE EXAMPLE
BASED ON .005 INCH [0.125 MM] THICK STENCIL
SCALE:8X

4214825/C 02/2019

NOTES: (continued)

8. Laser cutting apertures with trapezoidal walls and rounded corners may offer better paste release. IPC-7525 may have alternate design recommendations.
9. Board assembly site may have different recommendations for stencil design.

PACKAGE OUTLINE

DGK0008A

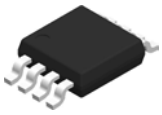

VSSOP - 1.1 mm max height

SMALL OUTLINE PACKAGE

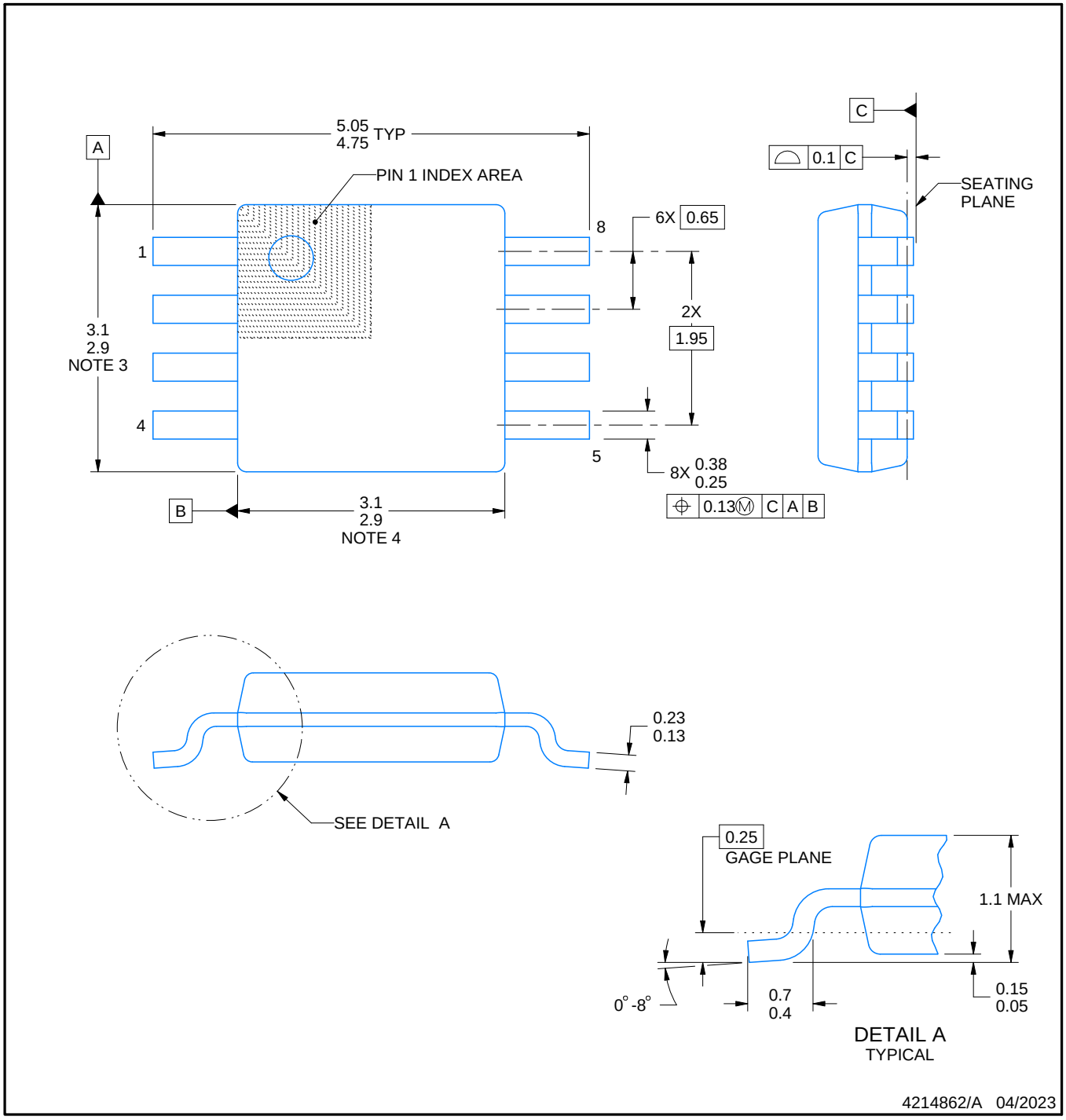

PowerPAD is a trademark of Texas Instruments.

NOTES:

1. All linear dimensions are in millimeters. Any dimensions in parenthesis are for reference only. Dimensioning and tolerancing per ASME Y14.5M.
2. This drawing is subject to change without notice.
3. This dimension does not include mold flash, protrusions, or gate burrs. Mold flash, protrusions, or gate burrs shall not exceed 0.15 mm per side.
4. This dimension does not include interlead flash. Interlead flash shall not exceed 0.25 mm per side.
5. Reference JEDEC registration MO-187.

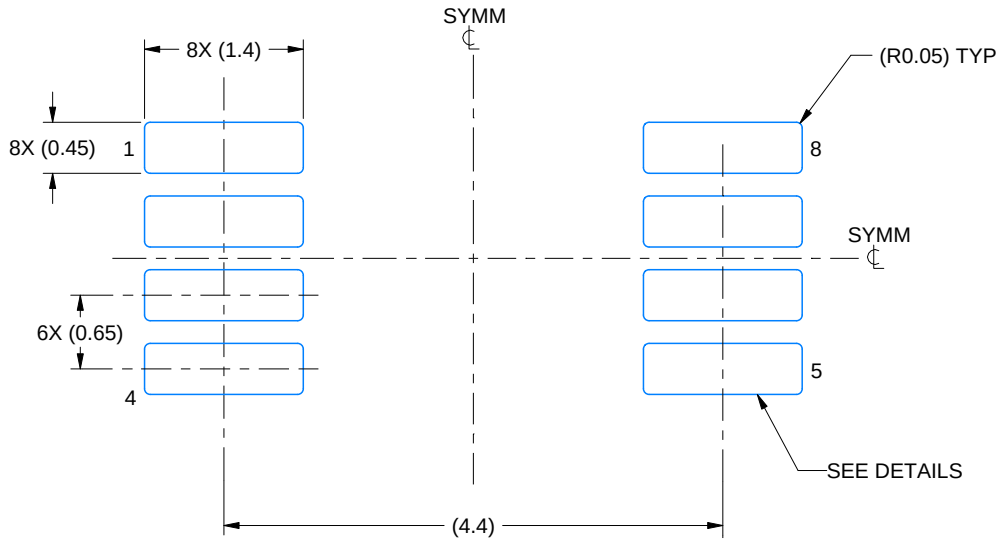

LAND PATTERN EXAMPLE
EXPOSED METAL SHOWN
SCALE: 15X

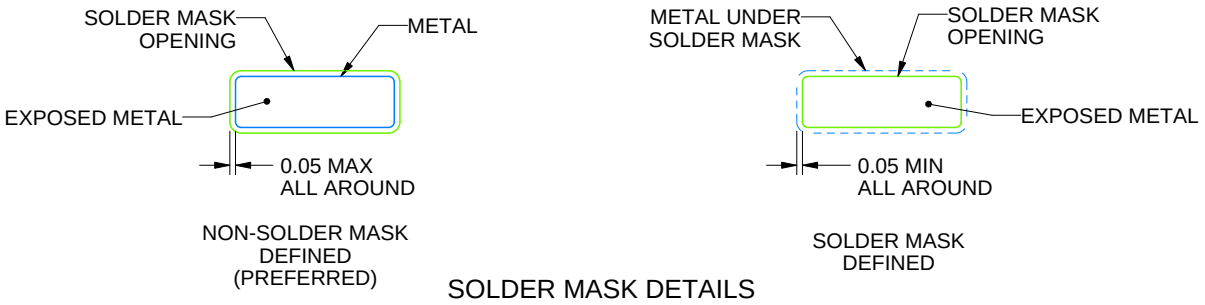

SOLDER MASK DETAILS

4214862/A 04/2023

NOTES: (continued)

6. Publication IPC-7351 may have alternate designs.
7. Solder mask tolerances between and around signal pads can vary based on board fabrication site.
8. Vias are optional depending on application, refer to device data sheet. If any vias are implemented, refer to their locations shown on this view. It is recommended that vias under paste be filled, plugged or tented.
9. Size of metal pad may vary due to creepage requirement.

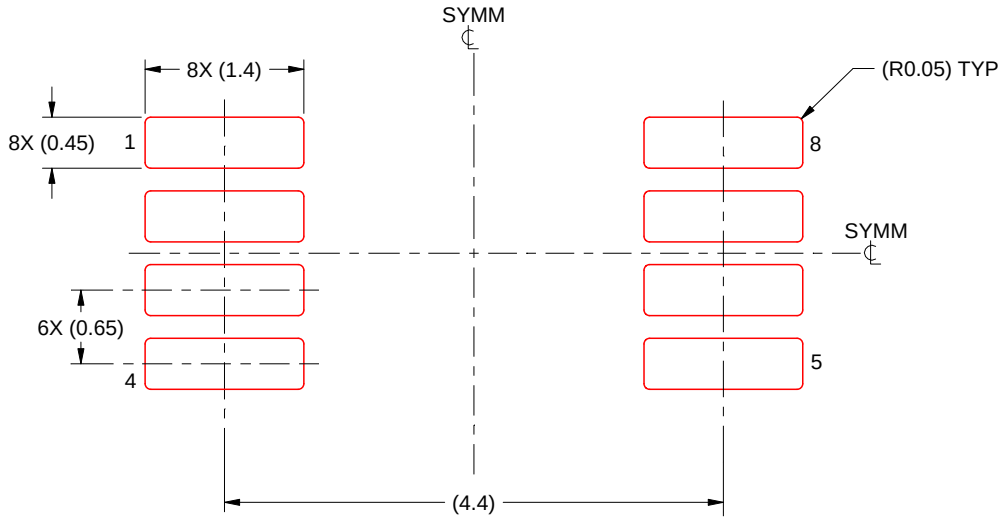

SOLDER PASTE EXAMPLE
SCALE: 15X

4214862/A 04/2023

NOTES: (continued)

11. Laser cutting apertures with trapezoidal walls and rounded corners may offer better paste release. IPC-7525 may have alternate design recommendations.
12. Board assembly site may have different recommendations for stencil design.

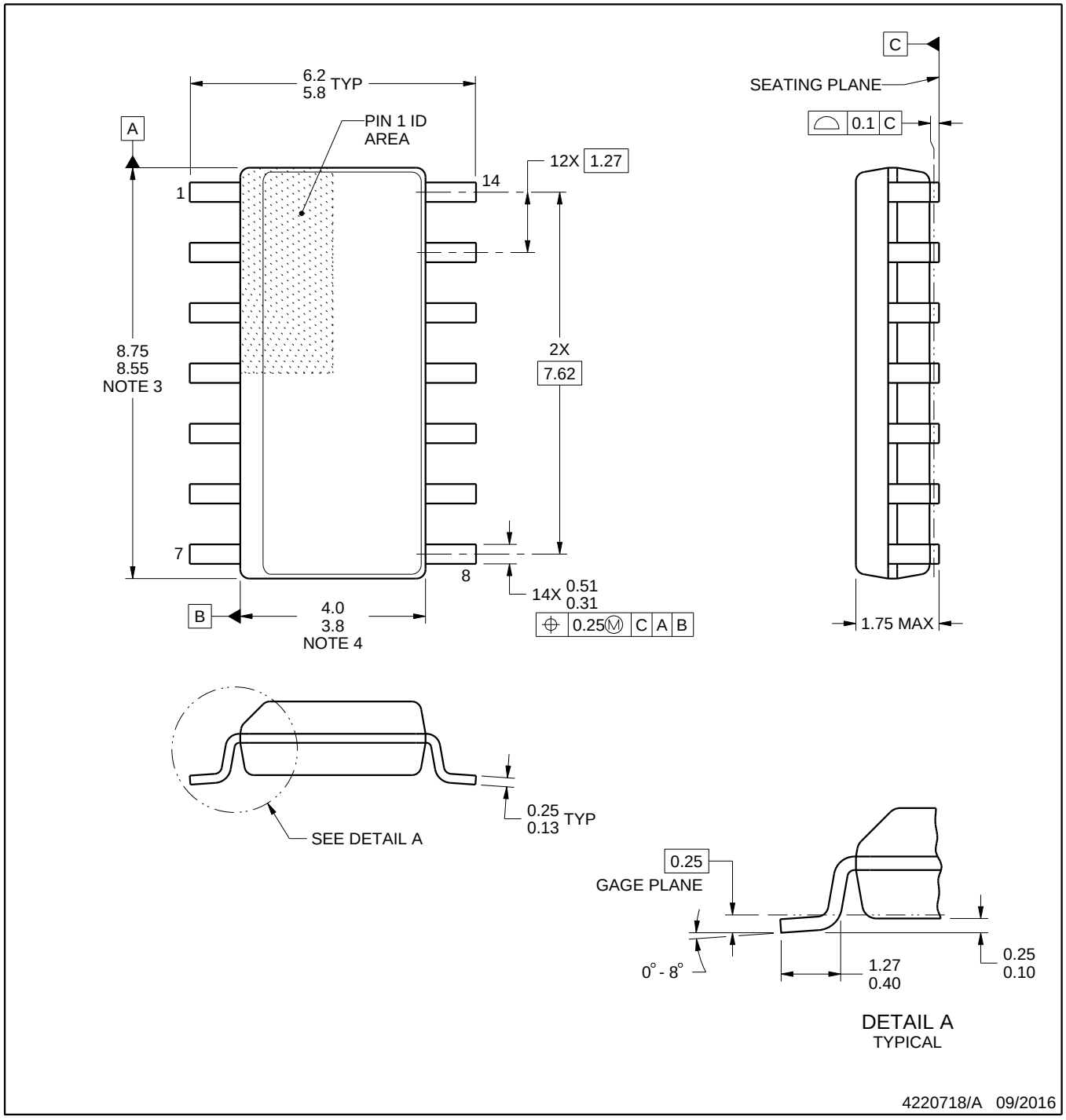

NOTES:

1. All linear dimensions are in millimeters. Dimensions in parenthesis are for reference only. Dimensioning and tolerancing per ASME Y14.5M.
2. This drawing is subject to change without notice.
3. This dimension does not include mold flash, protrusions, or gate burrs. Mold flash, protrusions, or gate burrs shall not exceed 0.15 mm, per side.
4. This dimension does not include interlead flash. Interlead flash shall not exceed 0.43 mm, per side.
5. Reference JEDEC registration MS-012, variation AB.

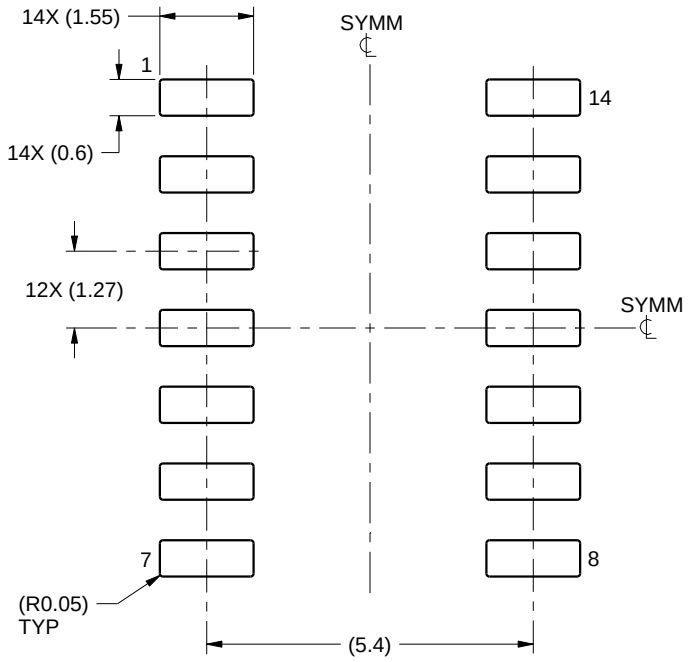

LAND PATTERN EXAMPLE
SCALE:8X

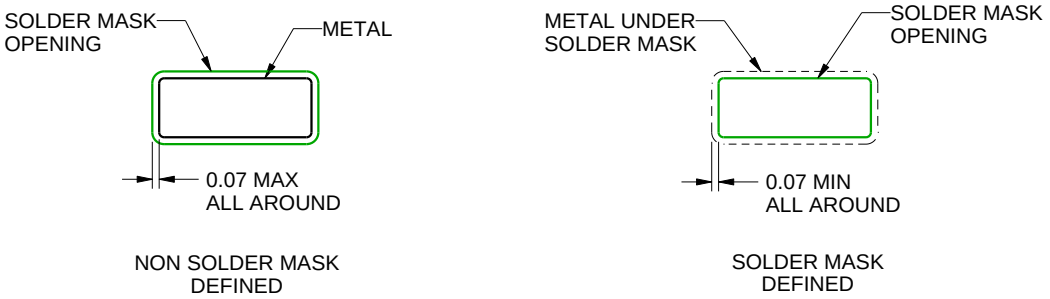

SOLDER MASK DETAILS

4220718/A 09/2016

NOTES: (continued)

6. Publication IPC-7351 may have alternate designs.
7. Solder mask tolerances between and around signal pads can vary based on board fabrication site.

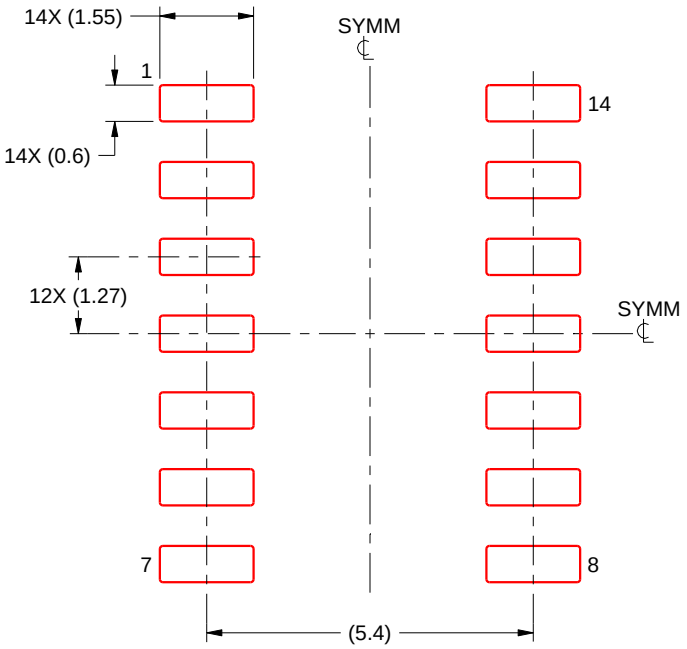

SOLDER PASTE EXAMPLE
BASED ON 0.125 mm THICK STENCIL
SCALE:8X

4220718/A 09/2016

NOTES: (continued)

8. Laser cutting apertures with trapezoidal walls and rounded corners may offer better paste release. IPC-7525 may have alternate design recommendations.
9. Board assembly site may have different recommendations for stencil design.

IMPORTANT NOTICE AND DISCLAIMER

TI PROVIDES TECHNICAL AND RELIABILITY DATA (INCLUDING DATA SHEETS), DESIGN RESOURCES (INCLUDING REFERENCE DESIGNS), APPLICATION OR OTHER DESIGN ADVICE, WEB TOOLS, SAFETY INFORMATION, AND OTHER RESOURCES “AS IS” AND WITH ALL FAULTS, AND DISCLAIMS ALL WARRANTIES, EXPRESS AND IMPLIED, INCLUDING WITHOUT LIMITATION ANY IMPLIED WARRANTIES OF MERCHANTABILITY, FITNESS FOR A PARTICULAR PURPOSE OR NON-INFRINGEMENT OF THIRD PARTY INTELLECTUAL PROPERTY RIGHTS.

These resources are intended for skilled developers designing with TI products. You are solely responsible for (1) selecting the appropriate TI products for your application, (2) designing, validating and testing your application, and (3) ensuring your application meets applicable standards, and any other safety, security, regulatory or other requirements.

These resources are subject to change without notice. TI grants you permission to use these resources only for development of an application that uses the TI products described in the resource. Other reproduction and display of these resources is prohibited. No license is granted to any other TI intellectual property right or to any third party intellectual property right. TI disclaims responsibility for, and you will fully indemnify TI and its representatives against, any claims, damages, costs, losses, and liabilities arising out of your use of these resources.

TI’s products are provided subject to TI’s Terms of Sale or other applicable terms available either on ti.com or provided in conjunction with such TI products. TI’s provision of these resources does not expand or otherwise alter TI’s applicable warranties or warranty disclaimers for TI products.

TI objects to and rejects any additional or different terms you may have proposed.

Mailing Address: Texas Instruments, Post Office Box 655303, Dallas, Texas 75265
Copyright © 2025, Texas Instruments Incorporated