SN74AHCT174 Hex D-Type Flip-Flops with Clear

1 Features

- Inputs are TTL-voltage compatible
- Contain six flip-flops with single-rail outputs
- Latch-Up performance exceeds 250mA per JESD 17

2 Applications

- Buffer/Storage Registers
- Shift Registers
- Pattern Generators

3 Description

These positive-edge-triggered D-type flip-flops have a direct clear ($\overline{CLR}$) input.

Package Information

PART NUMBER	PACKAGE(1)	PACKAGE(2)	BODY SIZE(3)
SN74AHCT174	D (SOIC, 16)	9.9mm × 6mm	9.00mm × 3.90mm
	DB (SSOP, 16)	6.2mm × 7.8mm	6.2mm × 5.3mm
	N (PDIP , 16)	19.3mm × 9.4mm	19.3mm × 6.35mm
	NS (SOP, 16)	10.2mm × 7.8mm	10.2mm × 5.3mm
	PW (TSSOP, 16)	5mm × 6.4mm	5.00mm × 4.40mm

(1) For more information, see Mechanical, Packaging, and Orderable Information.
(2) The package size (length × width) is a nominal value and includes pins, where applicable.
(3) The body size (length × width) is a nominal value and does not include pins.

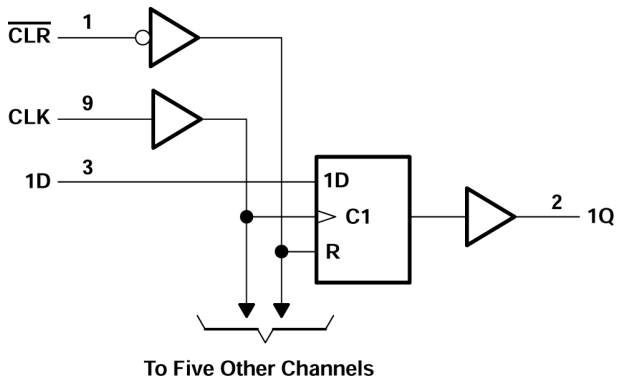

Logic Diagram (Positive Logic)

An IMPORTANT NOTICE at the end of this data sheet addresses availability, warranty, changes, use in safety-critical applications, intellectual property matters and other important disclaimers. UNLESS OTHERWISE NOTED, this document contains PRODUCTION DATA.

Table of Contents

1 Features....1
2 Applications....1
3 Description....1
4 Pin Configuration and Functions....3
5 Specifications....4
5.1 Absolute Maximum Ratings....4
5.2 ESD Ratings....4
5.3 Recommended Operating Conditions....4
5.4 Thermal Information....4
5.5 Electrical Characteristics....5
5.6 Timing Requirements....5
5.7 Switching Characteristics....5
5.8 Noise Characteristics....5
5.9 Operating Characteristics....6
6 Parameter Measurement Information....7
7 Detailed Description....8
7.1 Overview....8
7.2 Functional Block Diagram....8
7.3 Device Functional Modes....8
8 Application and Implementation....9
8.1 Power Supply Recommendations....9
8.2 Layout....9
9 Device and Documentation Support....10
9.1 Documentation Support (Analog)....10
9.2 Receiving Notification of Documentation Updates....10
9.3 Support Resources....10
9.4 Trademarks....10
9.5 Electrostatic Discharge Caution....10
9.6 Glossary....10
10 Revision History....10
11 Mechanical, Packaging, and Orderable Information....11

Copyright © 2024 Texas Instruments Incorporated

4 Pin Configuration and Functions

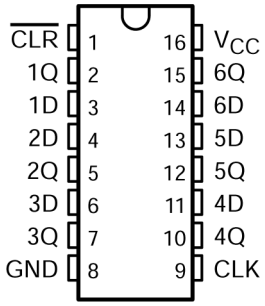

Figure 4-1. Package SN74AHCT174 D, DB, DGV, N, NS, or PW Package (Top View)

Table 4-1. Pin Functions

PIN		I/O[1]	DESCRIPTION
NO.	NAME		
1	$\overline{CLR}$	I	Clear all channels, active low
2	1Q	O	Channel 1, Q output
3	1D	I	Channel 1, D input
4	2D	I	Channel 2, D input
5	2Q	O	Channel 2, Q output
6	3D	I	Channel 3, D input
7	3Q	O	Channel 3, Q output
8	GND	—	Ground
9	CLK	I	Clock all channels, rising edge triggered
10	4Q	O	Channel 4, Q output
11	4D	I	Channel 4, D input
12	5Q	O	Channel 5, Q output
13	5D	I	Channel 5, D input
14	6D	I	Channel 6, D input
15	6Q	O	Channel 6, Q output
16	V_{CC}	—	Positive supply

Copyright © 2024 Texas Instruments Incorporated

5 Specifications

5.1 Absolute Maximum Ratings

over operating free-air temperature range (unless otherwise noted)[1]

			MIN	MAX	UNIT
V_{CC}	Supply voltage range		–0.5	7	V
V_I [1]	Input voltage range		–0.5	7	V
V_O [1]	Output voltage range		–0.5	V_{CC} + 0.5	V
I_{IK}	Input clamp current	(V_I < 0)		–20	mA
I_{OK}	Output clamp current	(V_O < 0 or V_O > V_{CC})		±20	mA
I_O	Continuous output current	(V_O = 0 to V_{CC})		±25	mA
	Continuous current through V_{CC} or GND			±50	mA
T_{stg}	Storage temperature range		–65	150	°C

(1) Stresses beyond those listed under “absolute maximum ratings” may cause permanent damage to the device. These are stress ratings only, and functional operation of the device at these or any other conditions beyond those indicated under “recommended operating conditions” is not implied. Exposure to absolute-maximum-rated conditions for extended periods may affect device reliability.
(2) The input and output voltage ratings may be exceeded if the input and output current ratings are observed.

5.2 ESD Ratings

			VALUE	UNIT
$V_{(ESD)}$	Electrostatic discharge	Human-body model (HBM), per ANSI/ESDA/JEDEC JS-001 [1]	±2000	V
		Charged-device model (CDM), per ANSI/ESDA/JEDEC JS-002 [2]	±1000	

(1) JEDEC document JEP155 states that 500-V HBM allows safe manufacturing with a standard ESD control process.
(2) JEDEC document JEP157 states that 250-V CDM allows safe manufacturing with a standard ESD control process.

5.3 Recommended Operating Conditions

(over operating free-air temperature range (unless otherwise noted)[1]

		SN74AHCT174		UNIT
		MIN	MAX	
V_{CC}	Supply voltage	4.5	5.5	V
V_{IH}	High-level input voltage	2		V
V_{IL}	Low-level input voltage		0.8	V
V_I	Input voltage	0	5.5	V
V_O	Output voltage	0	V_{CC}	V
I_{OH}	High-level output current		–8	mA
I_{OL}	Low-level output current		8	mA
Δt/Δv	Input transition rise or fall time		20	ns/V
T_A	Operating free-air temperature	–40	85	°C

(1) All unused inputs of the device must be held at V_{CC} or GND to ensure proper device operation. Refer to the TI application report, *Implications of Slow or Floating CMOS Inputs*, literature number SCBA004.

5.4 Thermal Information

THERMAL METRIC[1]		SN74AHCT174						UNIT
		D (SOIC)	DB (SSOP)	DGV (TVSOP)	N (PDIP)	NS (SOP)	PW (TSSOP)	
		16 PINS						
$R_{\theta JA}$	Junction-to-ambient thermal resistance	73	82	120	67	64	135.9	°C/W

(1) For more information about traditional and new thermal metrics, see the *IC Package Thermal Metrics* application report (SPRA953).

Copyright © 2024 Texas Instruments Incorporated

5.5 Electrical Characteristics

over recommended operating free-air temperature range (unless otherwise noted)

PARAMETER	TEST CONDITIONS	V_{CC}	T_A = 25 °C			SN74AHCT174		UNIT
			MIN	TYP	MAX	MIN	MAX	
V_{OH}	I_{OH} = -50 µA	4.5 V	4.4	4.5		4.4		V
	I_{OH} = -8 mA		3.94			3.8		
V_{OL}	I_{OL} = 50 µA	4.5 V			0.1		0.1	V
	I_{OL} = 8 mA				0.36		0.44	
I_I	V_I = 5.5 V or GND	0 V to 5.5 V			±0.1		±1	µA
I_{CC}	V_I = V_{CC} or GND, I_O = 0	5.5 V			4		40	µA
ΔI_{CC} (1)	One input at 3.4 V, Other inputs at V_{CC} or GND	5.5 V			1.35		1.5	µA
C_i	V_I = V_{CC} or GND	5 V		2	10		10	pF

(1) This is the increase in supply current for each input at one of the specified TTL voltage levels rather than 0 V or V_{CC}.

5.6 Timing Requirements

over recommended operating free-air temperature range, V_{CC} = 5 V ± 0.5 V (unless otherwise noted)

			T_A = 25°C		SN74AHCT174		UNIT
			MIN	MAX	MIN	MAX	
t_w	Pulse duration	$\overline{CLR}$ low	5		5		ns
		CLK high or low	5		5		
t_{su}	Setup time before CLK↑	Data	5		5		ns
		$\overline{CLR}$ inactive	3.5		3.5		
t_h	Hold time, data after CLK↑		0		0		ns

5.7 Switching Characteristics

over recommended operating free-air temperature range, V_{CC} = 5 V ± 0.5 V (unless otherwise noted) (see Figure 6-1)

PARAMETER	FROM (INPUT)	TO (OUTPUT)	LOAD CAPACITANCE	T_A = 25°C			SN74AHCT174		UNIT
				MIN	TYP	MAX	MIN	MAX	
f_{max}			C_L = 15 pF	100(1)	135(1)		80		MHz
			C_L = 50 pF	80	115		65		
t_{PHL}	$\overline{CLR}$	Any Q	C_L = 15 pF		7.6(1)	10.4(1)	1	13	ns
t_{PLH}	CLK	Any Q	C_L = 15 pF		5.8(1)	7.8(1)	1	9	ns
t_{PHL}					5.8(1)	7.8(1)	1	9	
t_{PHL}	$\overline{CLR}$	Any Q	C_L = 50 pF		8.1	11.4	1	13	ns
t_{PLH}	CLK	Any Q	C_L = 50 pF		6.3	8.8	1	10	ns
t_{PHL}					6.3	8.8	1	10	
$t_{sk(o)}$			C_L = 50 pF			1 (2)		1	ns

(1) On products compliant to MIL-PRF-38535, this parameter is not production tested.
(2) On products compliant to MIL-PRF-38535, this parameter does not apply.

5.8 Noise Characteristics

V_{CC} = 5 V, C_L = 50 pF, T_A = 25°C(1))

PARAMETER		SN74AHCT174			UNIT
		MIN	TYP	MAX	
$V_{OL(P)}$	Quiet output, maximum dynamic V_{OL}		0.8		V
$V_{OL(V)}$	Quiet output, minimum dynamic V_{OL}		–0.8		V

V_{CC} = 5 V, C_L = 50 pF, T_A = 25°C[(1)])

PARAMETER		SN74AHCT174			UNIT
		MIN	TYP	MAX	
$V_{OH(V)}$	Quiet output, minimum dynamic V_{OH}	4			V
$V_{IH(D)}$	High-level dynamic input voltage	2			V
$V_{IL(D)}$	Low-level dynamic input voltage			0.8	V

(1) Characteristics are for surface-mount packages only.

5.9 Operating Characteristics

T_A = 25°C

PARAMETER		TEST CONDITIONS		TYP	UNIT
C_{pd}	Power dissipation capacitance	No load,	f = 1 MHz	28	pF

Copyright © 2024 Texas Instruments Incorporated

6 Parameter Measurement Information

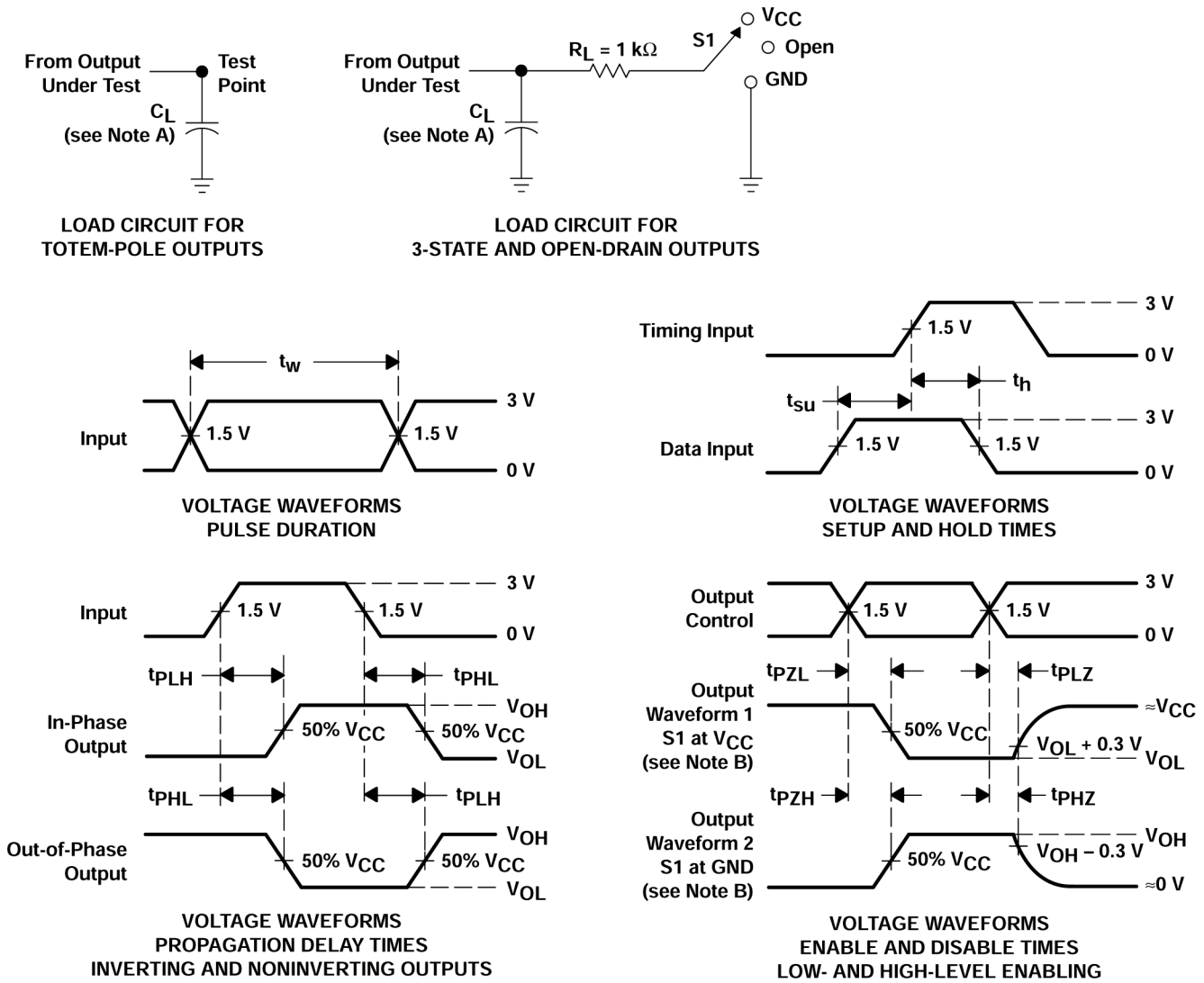

A. C_L includes probe and jig capacitance.

B. Waveform 1 is for an output with internal conditions such that the output is low except when disabled by the output control. Waveform 2 is for an output with internal conditions such that the output is high except when disabled by the output control.

C. All input pulses are supplied by generators having the following characteristics: PRR ≤ 1 MHz, Z_O = 50 Ω, t_r ≤ 3 ns, t_f ≤ 3 ns.

D. The outputs are measured one at a time with one input transition per measurement.

Figure 6-1. Load Circuit and Voltage Waveforms

TEST	S1
t_{PLH}/t_{PHL}	Open
t_{PLZ}/t_{PZL}	V_{CC}
t_{PHZ}/t_{PZH}	GND
Open Drain	V_{CC}

7 Detailed Description

7.1 Overview

Information at the data (D) inputs meeting the setup time requirements is transferred to the outputs on the positive-going edge of the clock (CLK) pulse. Clock triggering occurs at a particular voltage level and is not directly related to the transition time of the positive-going edge of CLK. When CLK is at either the high or low level, the D input has no effect at the output.

7.2 Functional Block Diagram

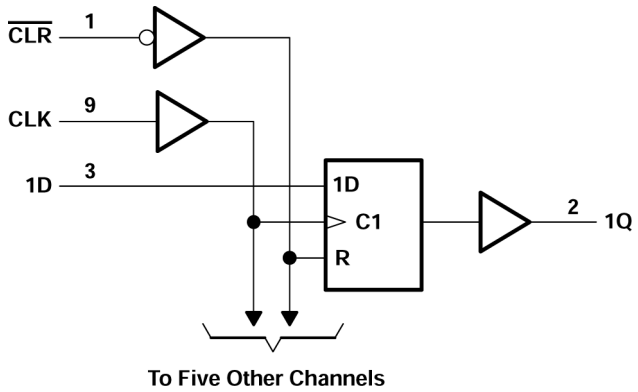

Figure 7-1. Logic Diagram (Positive Logic)

Pin numbers shown are for the D, DB, DGV, J, N, NS, PW, and W packages.

7.3 Device Functional Modes

Table 7-1. Function Table

INPUTS[(1)]			OUTPUT
$\overline{CLR}$	CLK	D	Q
L	X	X	L
H	↑	H	H
H	↑	L	L
H	L	X	Qo

(1) H = High Voltage Level, L = Low Voltage Level, X = Do not Care, Z = High Impedance

Copyright © 2024 Texas Instruments Incorporated

8 Application and Implementation

Note

Information in the following applications sections is not part of the TI component specification, and TI does not warrant its accuracy or completeness. TI's customers are responsible for determining suitability of components for their purposes, as well as validating and testing their design implementation to confirm system functionality.

8.1 Power Supply Recommendations

The power supply can be any voltage between the min and max supply voltage rating located in Section 5.3.

Each V_{CC} terminal should have a good bypass capacitor to prevent power disturbance. For devices with a single supply, a 0.1 µF capacitor is recommended. If there are multiple V_{CC} terminals then 0.01 µF or 0.022 µF capacitors are recommended for each power terminal. It is ok to parallel multiple bypass capacitors to reject different frequencies of noise. 0.1 µF and 1.0 µF capacitors are commonly used in parallel. The bypass capacitor should be installed as close to the power terminal as possible for the best results.

8.2 Layout

8.2.1 Layout Guidelines

When using multiple bit logic devices, inputs should not float. In many cases, functions or parts of functions of digital logic devices are unused. Some examples are when only two inputs of a triple-input AND gate are used, or when only 3 of the 4-buffer gates are used. Such unused input pins must not be left unconnected because the undefined voltages at the outside connections result in undefined operational states. All unused inputs of digital logic devices must be connected to a logic high or logic low voltage, as defined by the input voltage specifications, to prevent them from floating. The logic level that must be applied to any particular unused input depends on the function of the device. Generally, the inputs are tied to GND or VCC, whichever makes more sense for the logic function or is more convenient.

8.2.2 Layout Example

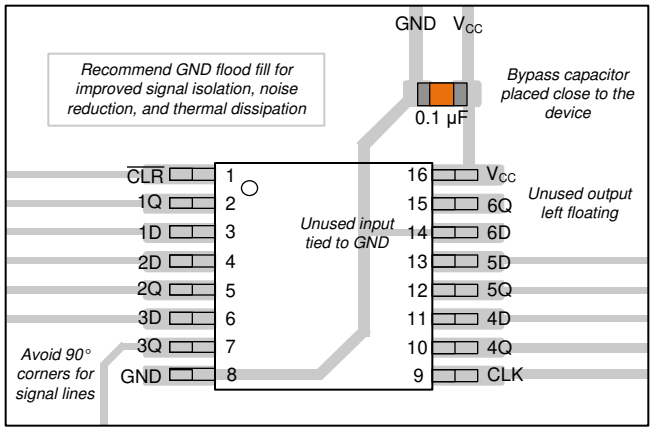

Figure 8-1. Example layout for the SN74AHCT174 in the PW package.

9 Device and Documentation Support

9.1 Documentation Support (Analog)

9.1.1 Related Documentation

The table below lists quick access links. Categories include technical documents, support and community resources, tools and software, and quick access to sample or buy.

Table 9-1. Related Links

PARTS	PRODUCT FOLDER	SAMPLE & BUY	TECHNICAL DOCUMENTS	TOOLS & SOFTWARE	SUPPORT & COMMUNITY
SN74AHCT174	Click here	Click here	Click here	Click here	Click here

9.2 Receiving Notification of Documentation Updates

To receive notification of documentation updates, navigate to the device product folder on ti.com. Click on *Notifications* to register and receive a weekly digest of any product information that has changed. For change details, review the revision history included in any revised document.

9.3 Support Resources

TI E2E™ support forums are an engineer's go-to source for fast, verified answers and design help — straight from the experts. Search existing answers or ask your own question to get the quick design help you need.

Linked content is provided "AS IS" by the respective contributors. They do not constitute TI specifications and do not necessarily reflect TI's views; see TI's Terms of Use.

9.4 Trademarks

TI E2E™ is a trademark of Texas Instruments.
All trademarks are the property of their respective owners.

9.5 Electrostatic Discharge Caution

This integrated circuit can be damaged by ESD. Texas Instruments recommends that all integrated circuits be handled with appropriate precautions. Failure to observe proper handling and installation procedures can cause damage.

ESD damage can range from subtle performance degradation to complete device failure. Precision integrated circuits may be more susceptible to damage because very small parametric changes could cause the device not to meet its published specifications.

9.6 Glossary

TI Glossary — This glossary lists and explains terms, acronyms, and definitions.

10 Revision History

NOTE: Page numbers for previous revisions may differ from page numbers in the current version.

Changes from Revision G (May 2023) to Revision H (July 2024) — **Page**

- Added package size to *Package Information* table 1
- Deleted machine model from *ESD Ratings* table 4
- Updated RθJA value: PW = 108 to 135.9, all values in °C/W 4
- Added *Application and Implementation* section 9
- Added *Device and Documentation Support* section 10

Changes from Revision F (April 2002) to Revision G (May 2023) — **Page**

- Added *Applications*, *Package Information* table, *Pin Functions* table, and *Thermal Information* table 1

Copyright © 2024 Texas Instruments Incorporated

11 Mechanical, Packaging, and Orderable Information

The following pages include mechanical, packaging, and orderable information. This information is the most current data available for the designated devices. This data is subject to change without notice and revision of this document. For browser-based versions of this data sheet, refer to the left-hand navigation.

Copyright © 2024 Texas Instruments Incorporated

PACKAGING INFORMATION

Orderable part number	Status (1)	Material type (2)	Package | Pins	Package qty | Carrier	RoHS (3)	Lead finish/ Ball material (4)	MSL rating/ Peak reflow (5)	Op temp (°C)	Part marking (6)
SN74AHCT174D	Obsolete	Production	SOIC (D) | 16	-	-	Call TI	Call TI	-40 to 85	AHCT174
SN74AHCT174DBR	Active	Production	SSOP (DB) | 16	2000 | LARGE T&R	Yes	NIPDAU	Level-1-260C-UNLIM	-40 to 85	HB174
SN74AHCT174DBR.A	Active	Production	SSOP (DB) | 16	2000 | LARGE T&R	Yes	NIPDAU	Level-1-260C-UNLIM	-40 to 85	HB174
SN74AHCT174DR	Active	Production	SOIC (D) | 16	2500 | LARGE T&R	Yes	NIPDAU	Level-1-260C-UNLIM	-40 to 85	AHCT174
SN74AHCT174DR.A	Active	Production	SOIC (D) | 16	2500 | LARGE T&R	Yes	NIPDAU	Level-1-260C-UNLIM	-40 to 85	AHCT174
SN74AHCT174N	Active	Production	PDIP (N) | 16	25 | TUBE	Yes	NIPDAU	N/A for Pkg Type	-40 to 85	SN74AHCT174N
SN74AHCT174N.A	Active	Production	PDIP (N) | 16	25 | TUBE	Yes	NIPDAU	N/A for Pkg Type	-40 to 85	SN74AHCT174N
SN74AHCT174NSR	Active	Production	SOP (NS) | 16	2000 | LARGE T&R	Yes	NIPDAU	Level-1-260C-UNLIM	-40 to 85	AHCT174
SN74AHCT174NSR.A	Active	Production	SOP (NS) | 16	2000 | LARGE T&R	Yes	NIPDAU	Level-1-260C-UNLIM	-40 to 85	AHCT174
SN74AHCT174PWR	Active	Production	TSSOP (PW) | 16	2000 | LARGE T&R	Yes	NIPDAU | SN | NIPDAU	Level-1-260C-UNLIM	-40 to 85	HB174
SN74AHCT174PWR.A	Active	Production	TSSOP (PW) | 16	2000 | LARGE T&R	Yes	NIPDAU	Level-1-260C-UNLIM	-40 to 85	HB174

(1) **Status:** For more details on status, see our product life cycle.

(2) **Material type:** When designated, preproduction parts are prototypes/experimental devices, and are not yet approved or released for full production. Testing and final process, including without limitation quality assurance, reliability performance testing, and/or process qualification, may not yet be complete, and this item is subject to further changes or possible discontinuation. If available for ordering, purchases will be subject to an additional waiver at checkout, and are intended for early internal evaluation purposes only. These items are sold without warranties of any kind.

(3) **RoHS values:** Yes, No, RoHS Exempt. See the TI RoHS Statement for additional information and value definition.

(4) **Lead finish/Ball material:** Parts may have multiple material finish options. Finish options are separated by a vertical ruled line. Lead finish/Ball material values may wrap to two lines if the finish value exceeds the maximum column width.

(5) **MSL rating/Peak reflow:** The moisture sensitivity level ratings and peak solder (reflow) temperatures. In the event that a part has multiple moisture sensitivity ratings, only the lowest level per JEDEC standards is shown. Refer to the shipping label for the actual reflow temperature that will be used to mount the part to the printed circuit board.

(6) **Part marking:** There may be an additional marking, which relates to the logo, the lot trace code information, or the environmental category of the part.

Multiple part markings will be inside parentheses. Only one part marking contained in parentheses and separated by a "~" will appear on a part. If a line is indented then it is a continuation of the previous line and the two combined represent the entire part marking for that device.

Important Information and Disclaimer: The information provided on this page represents TI's knowledge and belief as of the date that it is provided. TI bases its knowledge and belief on information provided by third parties, and makes no representation or warranty as to the accuracy of such information. Efforts are underway to better integrate information from third parties. TI has taken and continues to take reasonable steps to provide representative and accurate information but may not have conducted destructive testing or chemical analysis on incoming materials and chemicals. TI and TI suppliers consider certain information to be proprietary, and thus CAS numbers and other limited information may not be available for release.

In no event shall TI's liability arising out of such information exceed the total purchase price of the TI part(s) at issue in this document sold by TI to Customer on an annual basis.

TAPE AND REEL INFORMATION

REEL DIMENSIONS

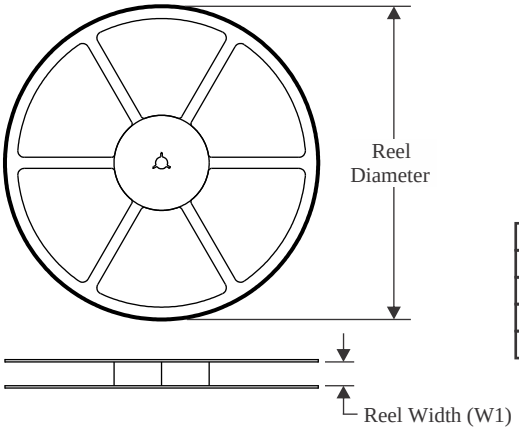

TAPE DIMENSIONS

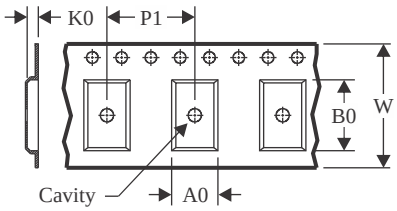

A0	Dimension designed to accommodate the component width
B0	Dimension designed to accommodate the component length
K0	Dimension designed to accommodate the component thickness
W	Overall width of the carrier tape
P1	Pitch between successive cavity centers

QUADRANT ASSIGNMENTS FOR PIN 1 ORIENTATION IN TAPE

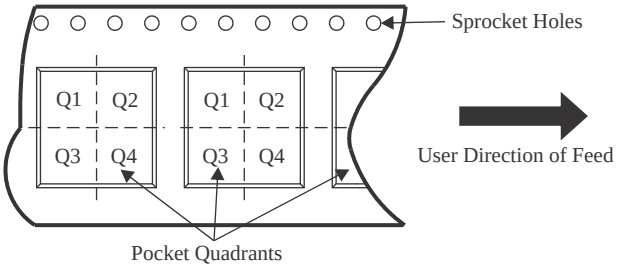

*All dimensions are nominal

Device	Package Type	Package Drawing	Pins	SPQ	Reel Diameter (mm)	Reel Width W1 (mm)	A0 (mm)	B0 (mm)	K0 (mm)	P1 (mm)	W (mm)	Pin1 Quadrant
SN74AHCT174DBR	SSOP	DB	16	2000	330.0	16.4	8.35	6.6	2.4	12.0	16.0	Q1
SN74AHCT174DR	SOIC	D	16	2500	330.0	16.4	6.5	10.3	2.1	8.0	16.0	Q1
SN74AHCT174NSR	SOP	NS	16	2000	330.0	16.4	8.2	10.5	2.5	12.0	16.0	Q1
SN74AHCT174PWR	TSSOP	PW	16	2000	330.0	12.4	6.9	5.6	1.6	8.0	12.0	Q1
SN74AHCT174PWR	TSSOP	PW	16	2000	330.0	16.4	6.9	5.6	1.6	8.0	12.0	Q1

TAPE AND REEL BOX DIMENSIONS

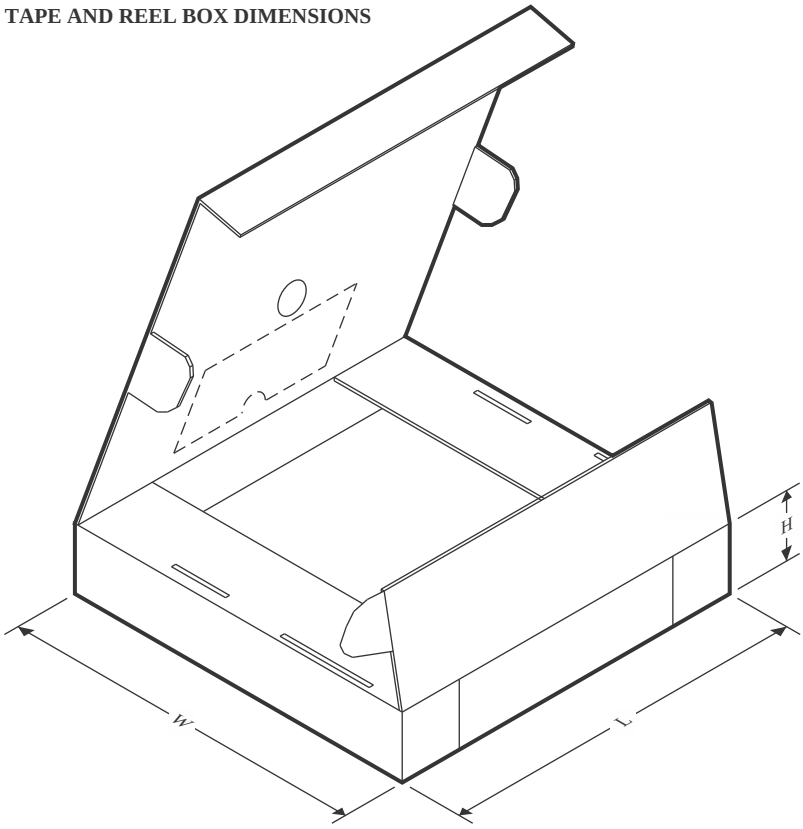

*All dimensions are nominal

Device	Package Type	Package Drawing	Pins	SPQ	Length (mm)	Width (mm)	Height (mm)
SN74AHCT174DBR	SSOP	DB	16	2000	356.0	356.0	35.0
SN74AHCT174DR	SOIC	D	16	2500	353.0	353.0	32.0
SN74AHCT174NSR	SOP	NS	16	2000	356.0	356.0	35.0
SN74AHCT174PWR	TSSOP	PW	16	2000	353.0	353.0	32.0
SN74AHCT174PWR	TSSOP	PW	16	2000	356.0	356.0	35.0

TUBE

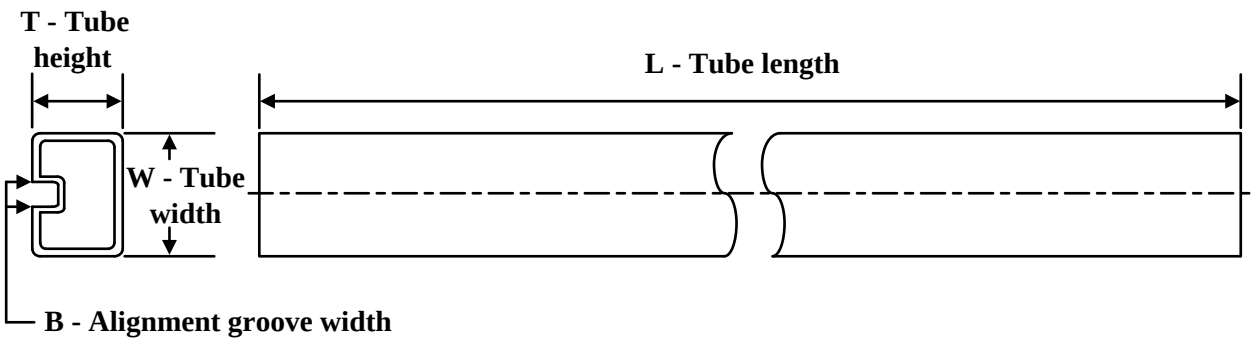

*All dimensions are nominal

Device	Package Name	Package Type	Pins	SPQ	L (mm)	W (mm)	T (µm)	B (mm)
SN74AHCT174N	N	PDIP	16	25	506	13.97	11230	4.32
SN74AHCT174N	N	PDIP	16	25	506	13.97	11230	4.32
SN74AHCT174N.A	N	PDIP	16	25	506	13.97	11230	4.32
SN74AHCT174N.A	N	PDIP	16	25	506	13.97	11230	4.32

D (R–PDSO–G16) PLASTIC SMALL OUTLINE

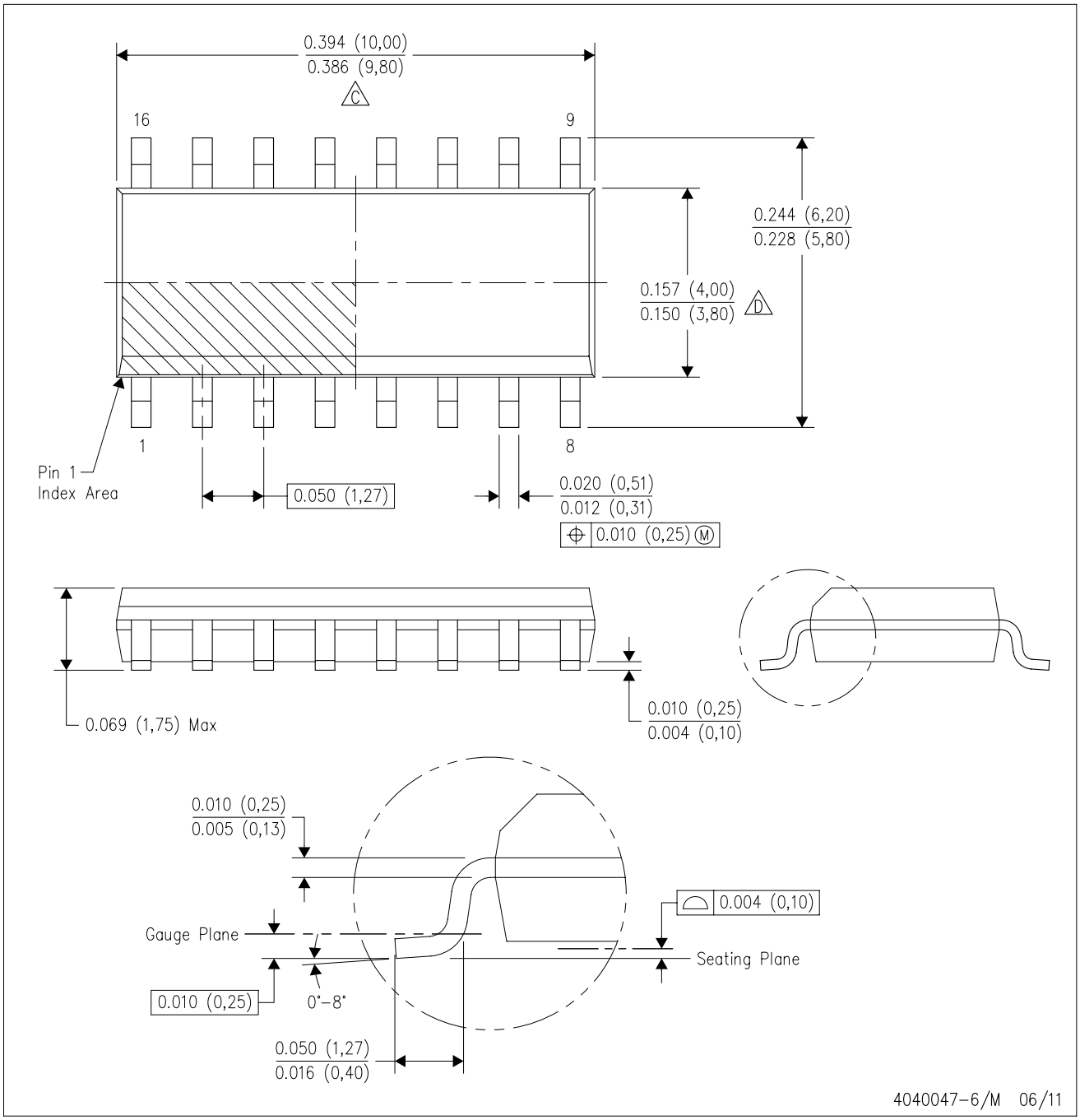

NOTES:
A. All linear dimensions are in inches (millimeters).
B. This drawing is subject to change without notice.
C. Body length does not include mold flash, protrusions, or gate burrs. Mold flash, protrusions, or gate burrs shall not exceed 0.006 (0,15) each side.
D. Body width does not include interlead flash. Interlead flash shall not exceed 0.017 (0,43) each side.
E. Reference JEDEC MS–012 variation AC.

PW0016A

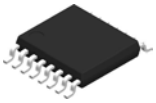

PACKAGE OUTLINE

TSSOP - 1.2 mm max height

SMALL OUTLINE PACKAGE

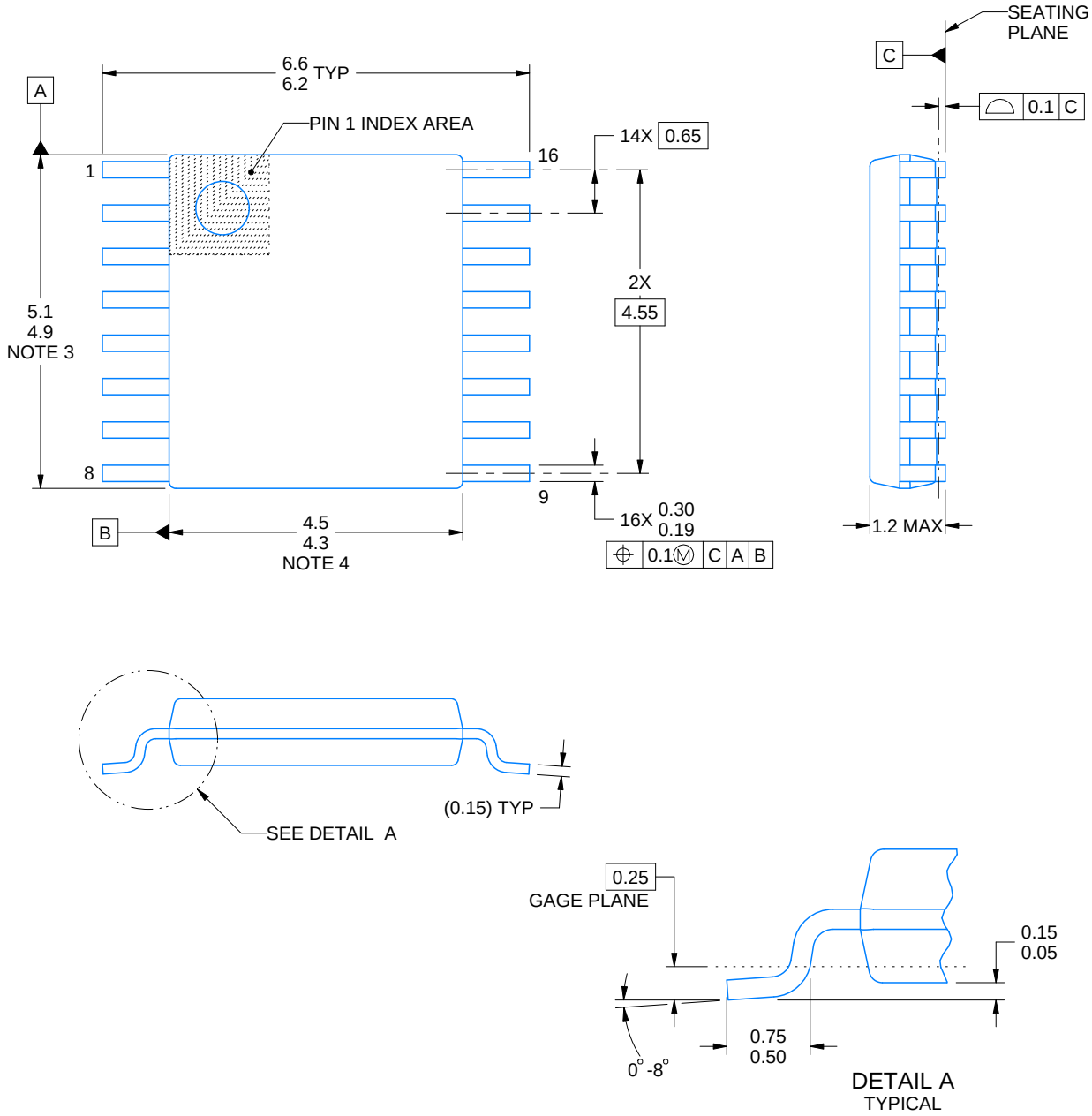

NOTES:

1. All linear dimensions are in millimeters. Any dimensions in parenthesis are for reference only. Dimensioning and tolerancing per ASME Y14.5M.
2. This drawing is subject to change without notice.
3. This dimension does not include mold flash, protrusions, or gate burrs. Mold flash, protrusions, or gate burrs shall not exceed 0.15 mm per side.
4. This dimension does not include interlead flash. Interlead flash shall not exceed 0.25 mm per side.
5. Reference JEDEC registration MO-153.

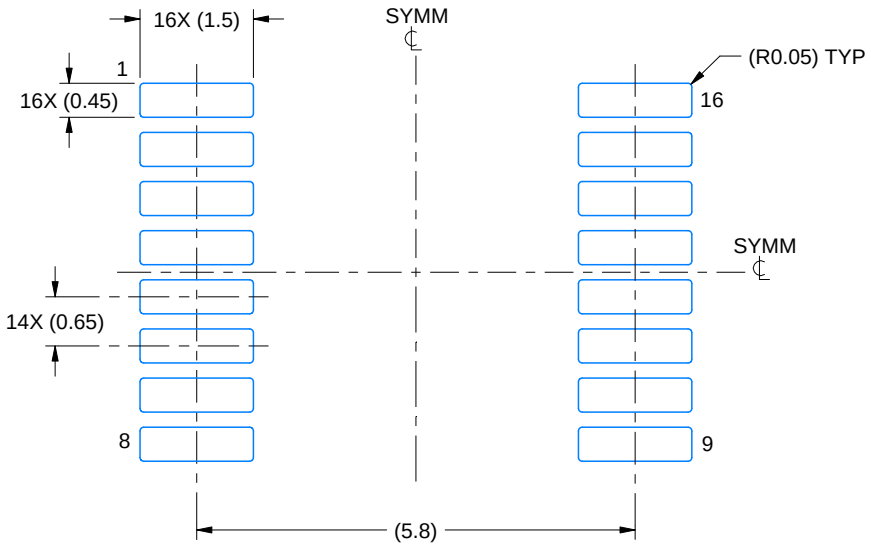

LAND PATTERN EXAMPLE
EXPOSED METAL SHOWN
SCALE: 10X

NON-SOLDER MASK DEFINED (PREFERRED)

SOLDER MASK DEFINED

SOLDER MASK DETAILS

4220204/A 02/2017

NOTES: (continued)

6. Publication IPC-7351 may have alternate designs.
7. Solder mask tolerances between and around signal pads can vary based on board fabrication site.

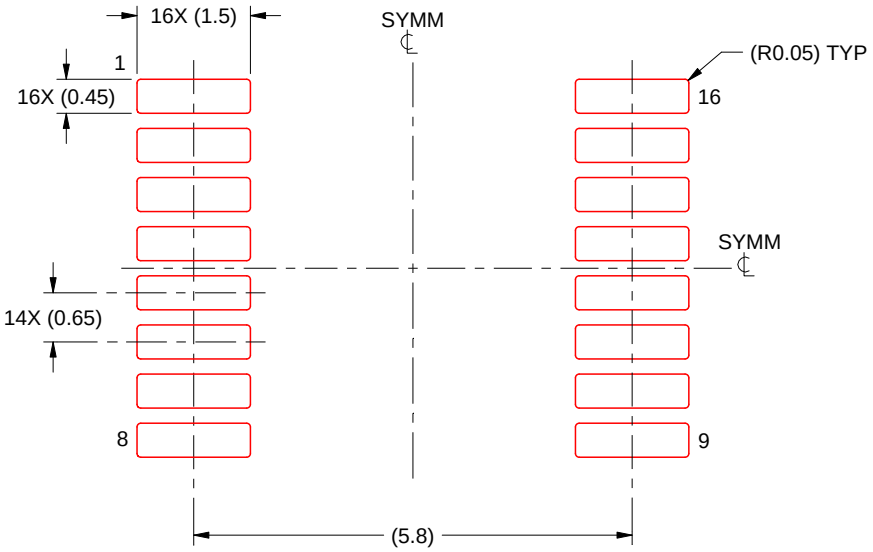

SOLDER PASTE EXAMPLE
BASED ON 0.125 mm THICK STENCIL
SCALE: 10X

4220204/A 02/2017

NOTES: (continued)

8. Laser cutting apertures with trapezoidal walls and rounded corners may offer better paste release. IPC-7525 may have alternate design recommendations.
9. Board assembly site may have different recommendations for stencil design.

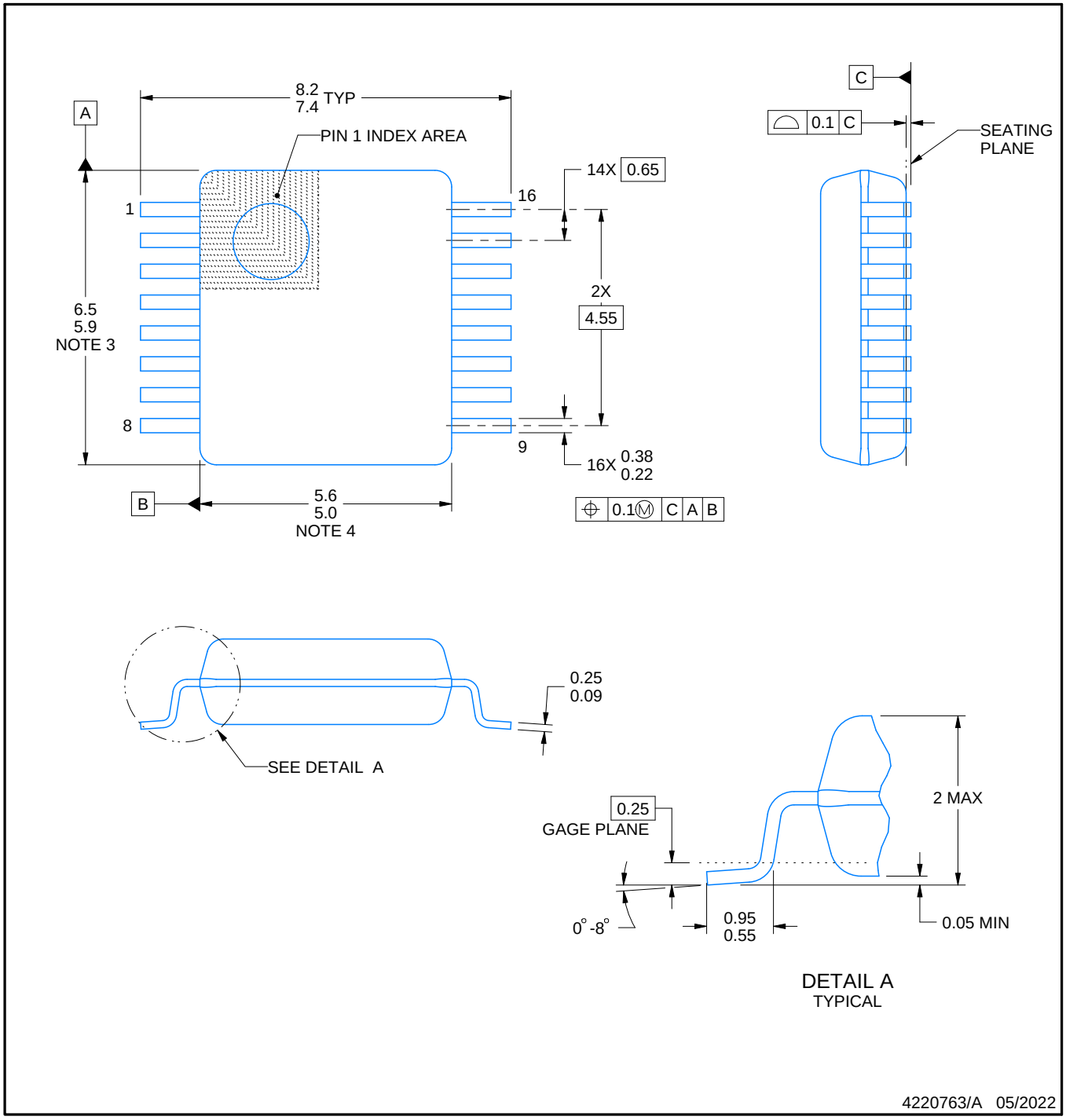

NOTES:

1. All linear dimensions are in millimeters. Any dimensions in parenthesis are for reference only. Dimensioning and tolerancing per ASME Y14.5M.
2. This drawing is subject to change without notice.
3. This dimension does not include mold flash, protrusions, or gate burrs. Mold flash, protrusions, or gate burrs shall not exceed 0.15 mm per side.
4. Reference JEDEC registration MO-150.

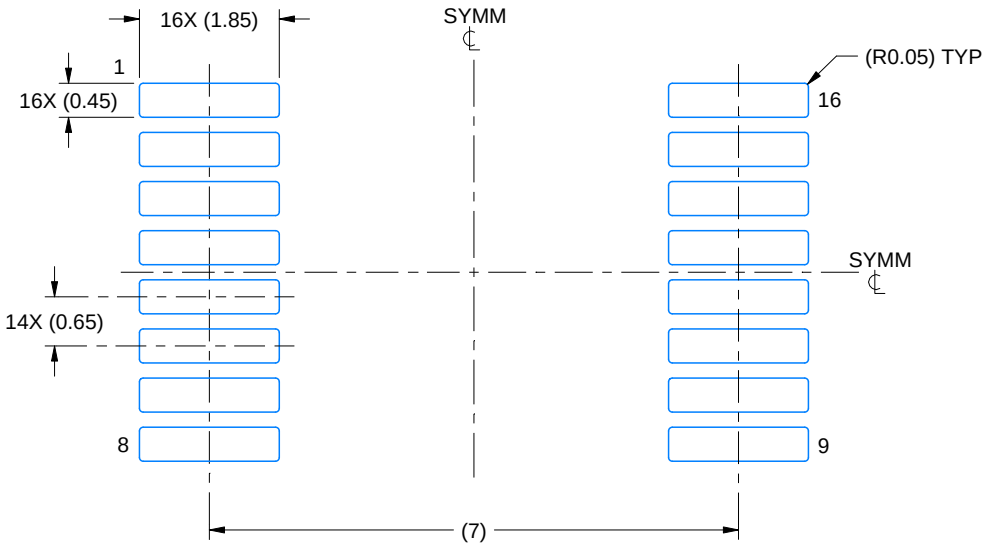

LAND PATTERN EXAMPLE
EXPOSED METAL SHOWN
SCALE: 10X

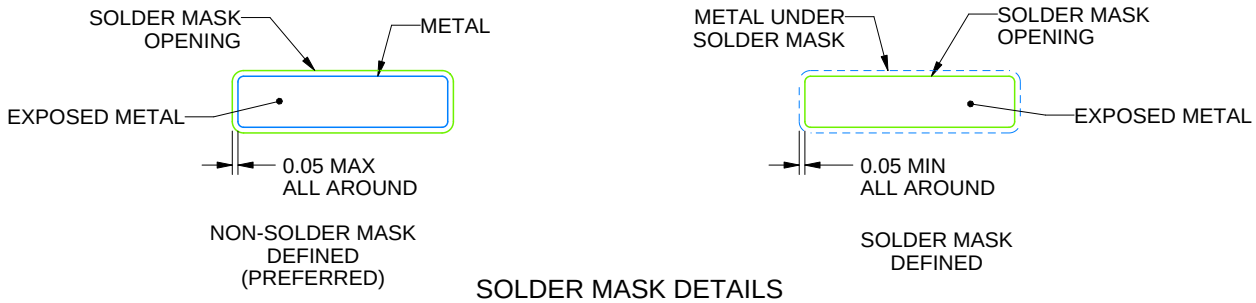

SOLDER MASK DETAILS

4220763/A 05/2022

NOTES: (continued)

5. Publication IPC-7351 may have alternate designs.
6. Solder mask tolerances between and around signal pads can vary based on board fabrication site.

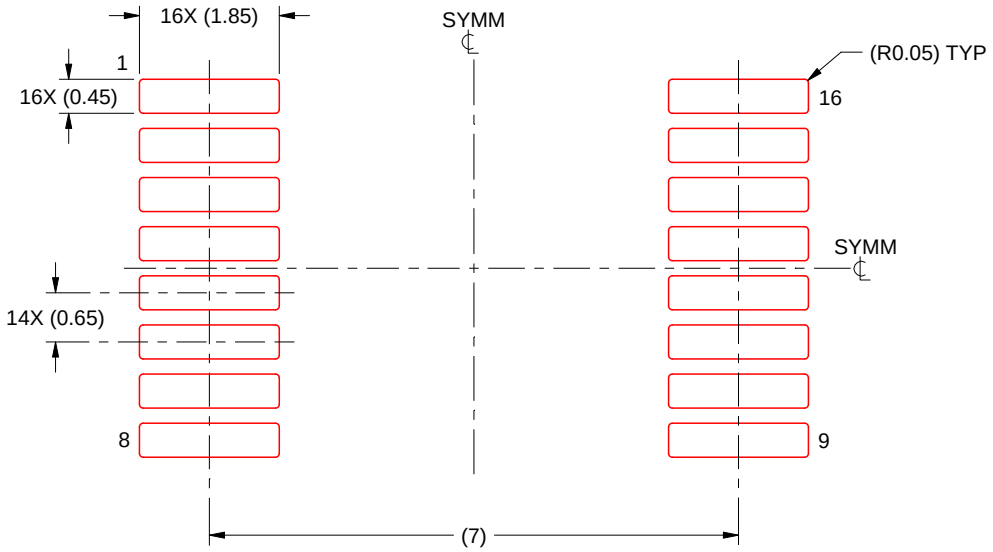

SOLDER PASTE EXAMPLE
BASED ON 0.125 mm THICK STENCIL
SCALE: 10X

4220763/A 05/2022

NOTES: (continued)

7. Laser cutting apertures with trapezoidal walls and rounded corners may offer better paste release. IPC-7525 may have alternate design recommendations.
8. Board assembly site may have different recommendations for stencil design.

MECHANICAL DATA

NS (R-PDSO-G)** **PLASTIC SMALL-OUTLINE PACKAGE**

14-PINS SHOWN

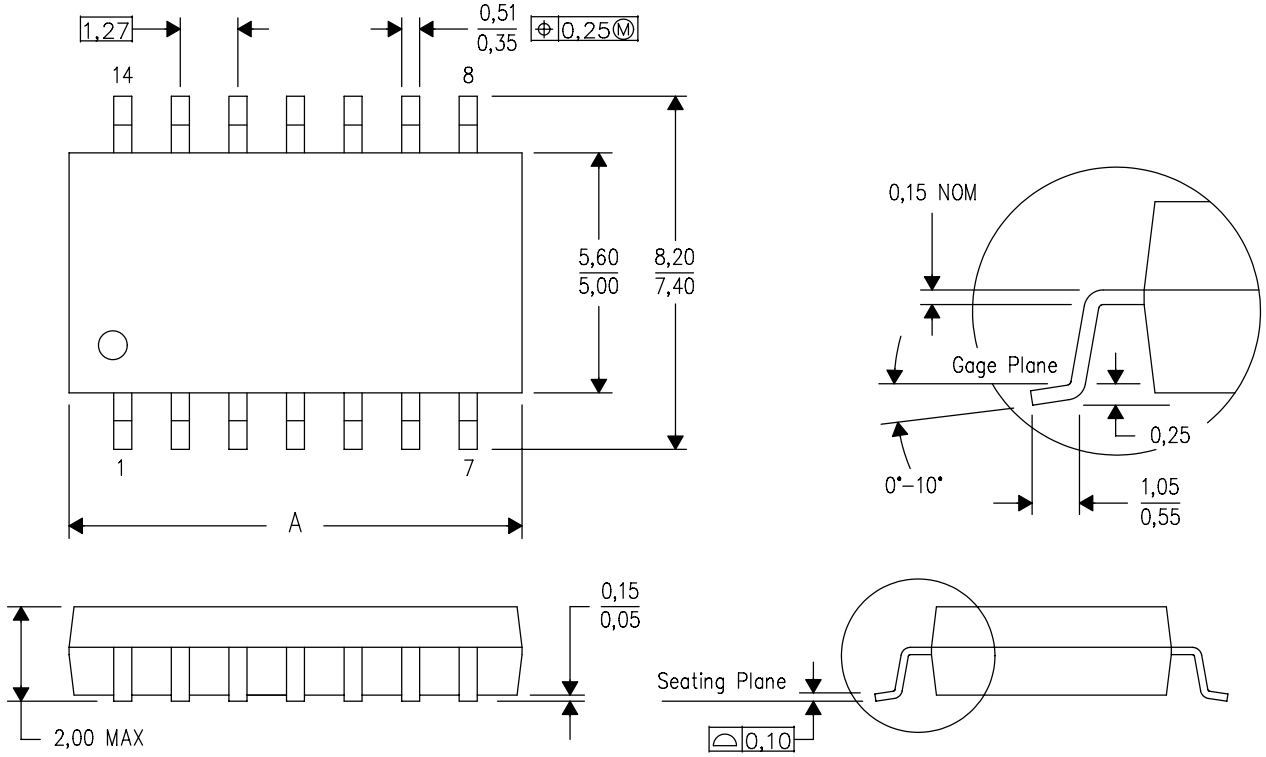

DIM \ PINS **	14	16	20	24
A MAX	10,50	10,50	12,90	15,30
A MIN	9,90	9,90	12,30	14,70

4040062/C 03/03

NOTES:
A. All linear dimensions are in millimeters.
B. This drawing is subject to change without notice.
C. Body dimensions do not include mold flash or protrusion, not to exceed 0,15.

N (R–PDIP–T**) PLASTIC DUAL–IN–LINE PACKAGE

16 PINS SHOWN

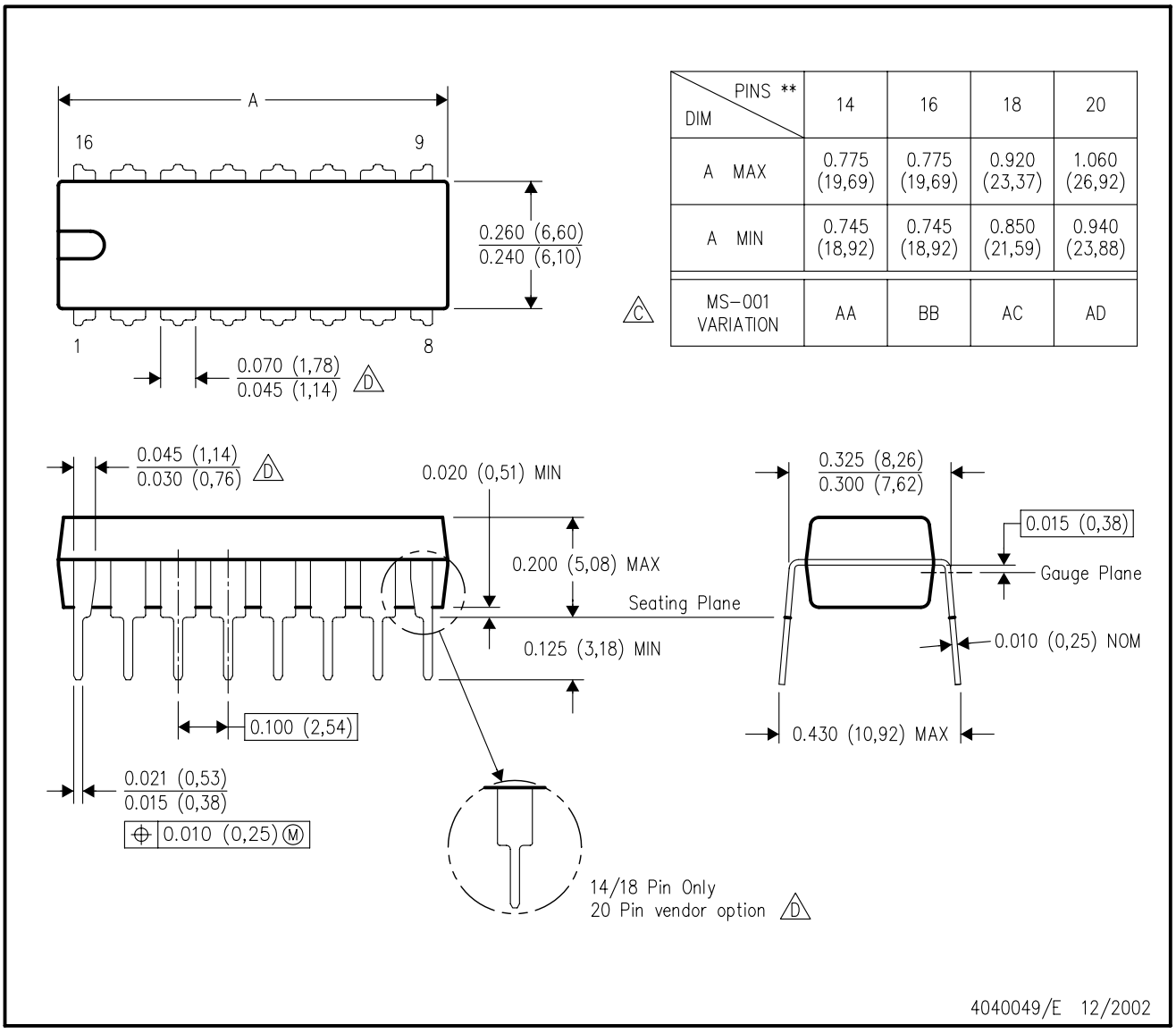

DIM \ PINS **	14	16	18	20
A MAX	0.775 (19,69)	0.775 (19,69)	0.920 (23,37)	1.060 (26,92)
A MIN	0.745 (18,92)	0.745 (18,92)	0.850 (21,59)	0.940 (23,88)
MS–001 VARIATION (C)	AA	BB	AC	AD

NOTES:
A. All linear dimensions are in inches (millimeters).
B. This drawing is subject to change without notice.
C. Falls within JEDEC MS–001, except 18 and 20 pin minimum body length (Dim A).
D. The 20 pin end lead shoulder width is a vendor option, either half or full width.

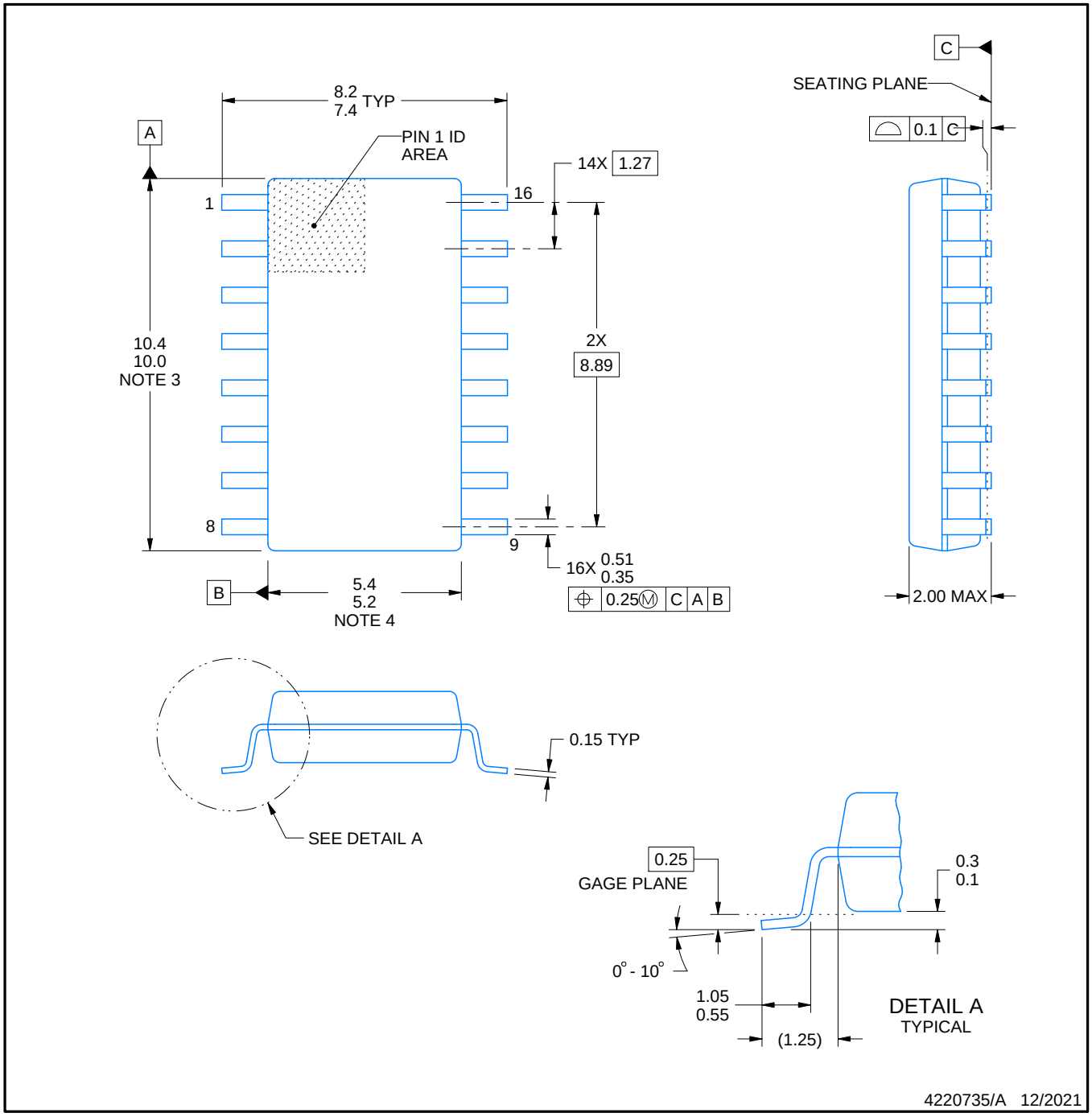

NOTES:

1. All linear dimensions are in millimeters. Dimensions in parenthesis are for reference only. Dimensioning and tolerancing per ASME Y14.5M.
2. This drawing is subject to change without notice.
3. This dimension does not include mold flash, protrusions, or gate burrs. Mold flash, protrusions, or gate burrs shall not exceed 0.15 mm, per side.
4. This dimension does not include interlead flash. Interlead flash shall not exceed 0.25 mm, per side.

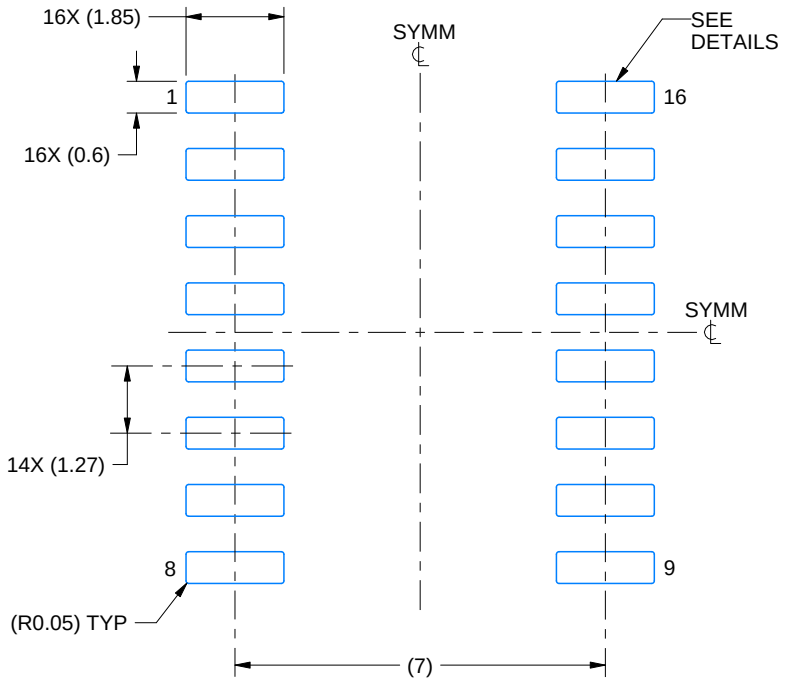

LAND PATTERN EXAMPLE
SCALE:7X

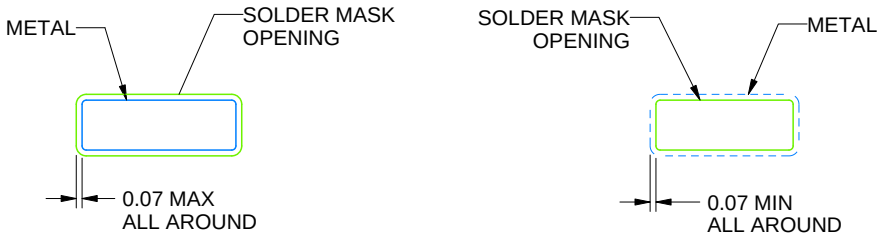

NON SOLDER MASK DEFINED

SOLDER MASK DEFINED

SOLDER MASK DETAILS

4220735/A 12/2021

NOTES: (continued)

5. Publication IPC-7351 may have alternate designs.
6. Solder mask tolerances between and around signal pads can vary based on board fabrication site.

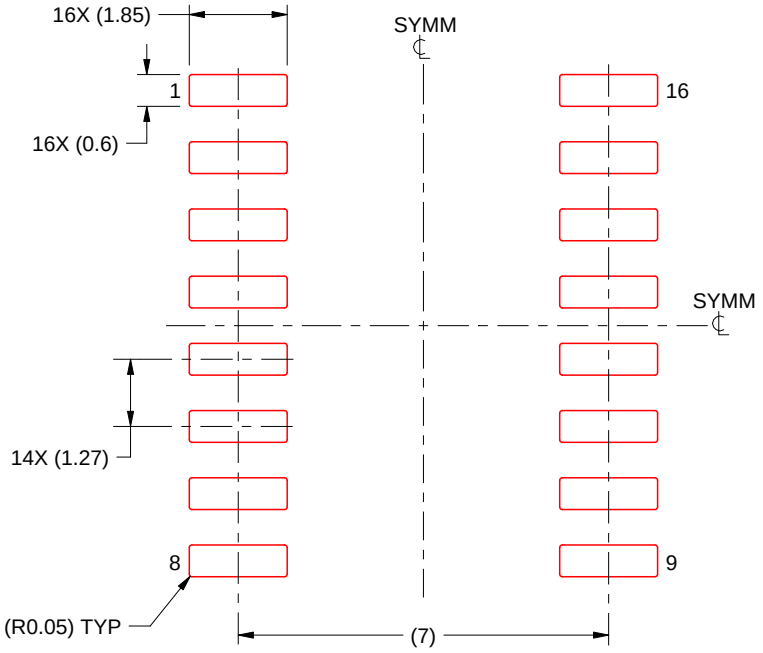

SOLDER PASTE EXAMPLE
BASED ON 0.125 mm THICK STENCIL
SCALE:7X

4220735/A 12/2021

NOTES: (continued)

7. Laser cutting apertures with trapezoidal walls and rounded corners may offer better paste release. IPC-7525 may have alternate design recommendations.
8. Board assembly site may have different recommendations for stencil design.

IMPORTANT NOTICE AND DISCLAIMER

TI PROVIDES TECHNICAL AND RELIABILITY DATA (INCLUDING DATA SHEETS), DESIGN RESOURCES (INCLUDING REFERENCE DESIGNS), APPLICATION OR OTHER DESIGN ADVICE, WEB TOOLS, SAFETY INFORMATION, AND OTHER RESOURCES “AS IS” AND WITH ALL FAULTS, AND DISCLAIMS ALL WARRANTIES, EXPRESS AND IMPLIED, INCLUDING WITHOUT LIMITATION ANY IMPLIED WARRANTIES OF MERCHANTABILITY, FITNESS FOR A PARTICULAR PURPOSE OR NON-INFRINGEMENT OF THIRD PARTY INTELLECTUAL PROPERTY RIGHTS.

These resources are intended for skilled developers designing with TI products. You are solely responsible for (1) selecting the appropriate TI products for your application, (2) designing, validating and testing your application, and (3) ensuring your application meets applicable standards, and any other safety, security, regulatory or other requirements.

These resources are subject to change without notice. TI grants you permission to use these resources only for development of an application that uses the TI products described in the resource. Other reproduction and display of these resources is prohibited. No license is granted to any other TI intellectual property right or to any third party intellectual property right. TI disclaims responsibility for, and you will fully indemnify TI and its representatives against, any claims, damages, costs, losses, and liabilities arising out of your use of these resources.

TI’s products are provided subject to TI’s Terms of Sale or other applicable terms available either on ti.com or provided in conjunction with such TI products. TI’s provision of these resources does not expand or otherwise alter TI’s applicable warranties or warranty disclaimers for TI products.

TI objects to and rejects any additional or different terms you may have proposed.

Mailing Address: Texas Instruments, Post Office Box 655303, Dallas, Texas 75265
Copyright © 2025, Texas Instruments Incorporated