TLV803E, TLV809E, TLV810E Low Power 250-nA I_Q and Small Size Supply Voltage Supervisors

1 Features

- Ensured $\overline{\text{RESET}}$/RESET for VDD = 0.7 V to 6 V
- Fixed time delay: 40 µs, 10 ms, 50 ms, 100 ms, 200 ms, 400 ms
- Supply current (IDD): 250 nA (typical)
  - 1 µA (maximum for VDD = 3.3 V)
- Output topology:
  - TLV809E: push-pull, active-low
  - TLV803E: open-drain, active-low
  - TLV810E: push-pull, active-high
- Under voltage detection:
  - High accuracy: ±0.5% (typical)
  - (V_{IT-}): 1.7 V, 1.8 V, 1.9 V, 2.25V, 2.4 V, 2.64 V, 2.93 V, 3.08 V, 3.3V, 4.2V, 4.38 V, 4.55V, 4.63 V
- Package:
  - SOT23-3 (DBZ) (with pin 1 = GND)
  - SOT23-3 (DBZ) (with pin 1 = $\overline{\text{RESET}}$/RESET)
  - SOT23-3 (DBZ) (with pin 3 = GND)
  - SC-70 (DCK)
  - X2SON-5 (DPW)
- Temperature range: –40°C to +125°C
- Pin-to-pin compatible with MAX803/809/810, APX803/809/810

2 Applications

- Electricity meters
- Factory Automation
- Portable, battery-powered equipment
- Set-top boxes and TVs
- Building automation
- Notebook/desktop computers, servers

3 Description

The TLV803E, TLV809E, and TLV810E are enhanced alternatives to the TLV803, TLV853, TLV809, LM809, TPS3809 and TLV810. TLV80xE and TLV81xE offer low quiescent current I_Q, higher accuracy, wider temperature range, and lower power-on-reset (V_{POR}) for increased system reliability.

The TLV80xE and TLV81xE family are low I_Q (250 nA typical, 1 µA max), voltage supervisory circuits (reset IC) that monitor VDD voltage level. These devices initiate a reset signal whenever supply voltage VDD drops below the factory programmed falling threshold voltage, V_{IT-}. The reset output remains low for a fixed reset time delay t_D after the VDD voltage rises above the rising voltage threshold (V_{IT+}) which is equivalent to the falling threshold voltage (V_{IT-}) plus hysteresis (V_{HYS}).

These devices have integrated glitch immunity to ignore fast transients on the VDD pin. The low I_Q and high accuracy (±0.5% typical) makes these voltage supervisors ideal for use in low-power and portable applications. The TLV80xE and TLV81xE devices are specified to have the defined output logic state for supply voltages down to V_{POR} = 0.7 V. The TLV80xE and TLV81xE devices are available in industry standard 3-pin SOT23 (DBZ) and SC70 (DCK) packages and very compact X2SON (DPW) package.

Device Information (1)

PART NUMBER	PACKAGE	BODY SIZE (NOM)
TLV803E, TLV809E, TLV810E	SOT-23 (3)	2.90 mm × 1.30 mm
	SC-70 (3)	2.00 mm × 1.25 mm
	X2SON (5)	0.8 mm x 0.8 mm

(1) For all available packages, see the orderable addendum at the end of the data sheet.

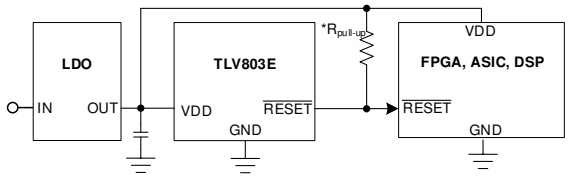

*Pull-up resistor not required for TLV809E, TLV810E

Typical Application

An IMPORTANT NOTICE at the end of this data sheet addresses availability, warranty, changes, use in safety-critical applications, intellectual property matters and other important disclaimers. UNLESS OTHERWISE NOTED, this document contains PRODUCTION DATA.

Table of Contents

1 Features....1
2 Applications....1
3 Description....1
4 Revision History....2
5 Device Comparison....3
6 Pin Configuration and Functions....4
7 Specifications....6
7.1 Absolute Maximum Ratings....6
7.2 ESD Ratings....6
7.3 Recommended Operating Conditions....6
7.4 Thermal Information....7
7.5 Electrical Characteristics....8
7.6 Timing Requirements....9
7.7 Timing Diagrams....10
7.8 Typical Characteristics....11
8 Detailed Description....16
8.1 Overview....16
8.2 Functional Block Diagram....16
8.3 Feature Description....16
8.4 Device Functional Modes....19
9 Application and Implementation....20
9.1 Application Information....20
9.2 Typical Application - Voltage Rail Monitoring....20
9.3 Typical Application - Overvoltage Monitoring....22
10 Power Supply Recommendations....23
11 Layout....24
11.1 Layout Guidelines....24
11.2 Layout Example....24
12 Device and Documentation Support....26
12.1 Device Support....26
12.2 Documentation Support....27
12.3 Receiving Notification of Documentation Updates....27
12.4 Support Resources....27
12.5 Trademarks....27
12.6 Electrostatic Discharge Caution....27
12.7 Glossary....27
13 Mechanical, Packaging, and Orderable Information....27

4 Revision History

NOTE: Page numbers for previous revisions may differ from page numbers in the current version.

Changes from Revision I (Feb 2021) to Revision J (May 2021) — **Page**

- Updated Device Naming Nomenclature figure by adding *Pinout Indicator (DBZ Package Only)* from *Pinout Indicator* 3
- Updated pin numbering of Figure 6-5 (X2SON) package and updated Pin Functions Table....4
- Updated X2SON (DPW) Layout Example....24

Changes from Revision H (December 2020) to Revision I (February 2021) — **Page**

- Remove duplicate package....27

Changes from Revision G (October 2020) to Revision H (December 2020) — **Page**

- Added Reset time delay variant F specification....9

Changes from Revision F (June 2020) to Revision G (October 2020) — **Page**

- Updated the numbering format for tables, figures and cross-references throughout the document....1
- Added additional threshold voltages (V_{IT-}) and new package information....1
- Updated Device Naming Nomenclature figure to include (DBZ) V pinout option....3
- Added new (DBZ) package option (Pin 3 = GND, V pinout) and updated Pin Functions Table....4
- Added layout example for (DBZ) V pinout package....24
- Modified Device Naming Convention table to include additional threshold voltages (V_{IT-}), reset time delay options and pinout indicator options....26

Changes from Revision E (April 2020) to Revision F (June 2020) — **Page**

- Changed DPW package from Advanced Information to Production Data....1
- Changed DPW package Information....4

Changes from Revision D (February 2020) to Revision E (April 2020) — **Page**

- Added X2SON (DPW) package option....3

Copyright © 2021 Texas Instruments Incorporated

Changes from Revision C (November 2019) to Revision D (February 2020)	Page
• Added device nomenclature figure	3
• Added timing diagram for TLV810E	10
• Added Figure 6, Figure 23, Figure 24	11
• Added typical application for TLV810E	22

Changes from Revision B (July 2019) to Revision C (November 2019)	Page
• Changed device status from Advance Information to Production Data	1

5 Device Comparison

Figure 5-1 shows the device naming nomenclature to compare the difference device variants. See Table 12-1 for a more detailed explanation.

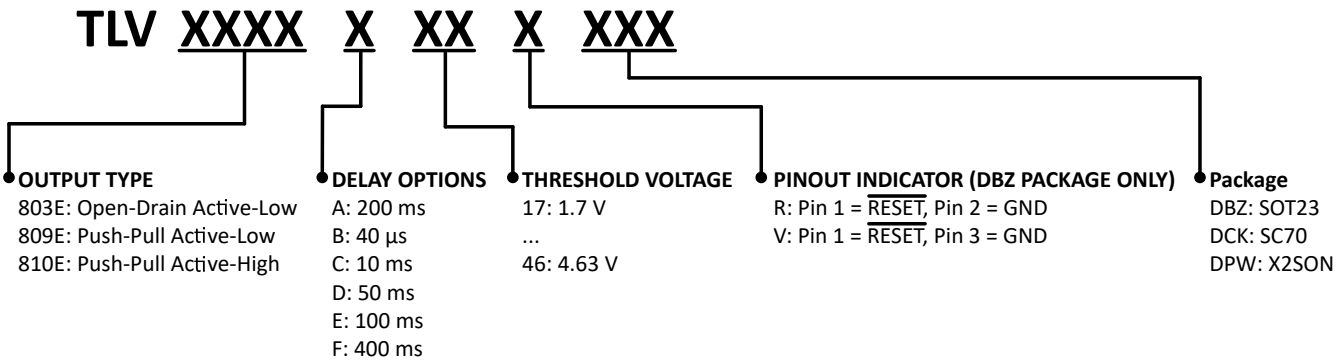

Figure 5-1. Device Naming Nomenclature

6 Pin Configuration and Functions

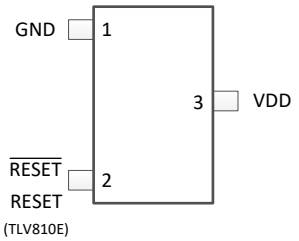

Figure 6-1. DBZ Package (Pin 1 = GND) 3-Pin SOT-23 Top View

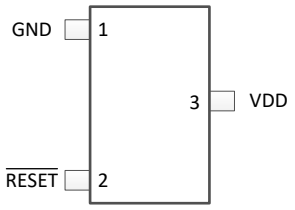

Figure 6-2. DCK Package 3-Pin SC-70 Top View

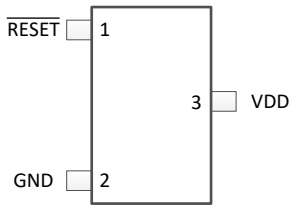

Figure 6-3. DBZ Package (Pin 1 = RESET, R pinout) 3-Pin SOT-23 Top View

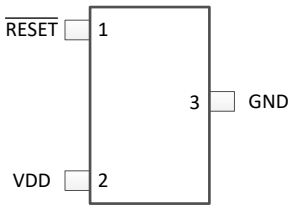

Figure 6-4. DBZ Package (Pin 3 = GND, V pinout) 3-Pin SOT-23 Top View

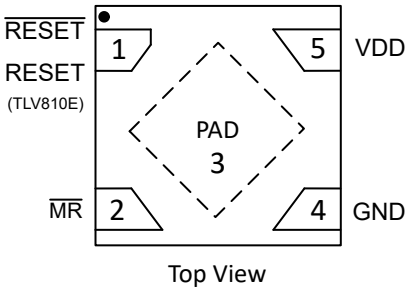

Figure 6-5. DPW Package 5-Pin X2SON See Table 6-1 Top View

Copyright © 2021 Texas Instruments Incorporated

Table 6-1. Pin Functions

PIN					I/O	DESCRIPTION
NAME	DCK, DBZ	DBZ (V PINOUT)	DBZ (R PINOUT)	DPW		
GND	1	3	2	4	—	**Ground**
$\overline{\text{RESET}}$	2	1	1	1	O	**Active-low output reset signal:** This pin is driven low logic when VDD voltage falls below the negative voltage threshold (V_{IT-}). $\overline{\text{RESET}}$ remains low (asserted) for the delay time period (t_D) after VDD voltage rise above V_{IT+}.
RESET	2	1	1	1	O	**Active-High output reset signal (TLV810E only):** This pin is driven high logic when VDD voltage falls below the negative voltage threshold (V_{IT-}). RESET remains high (asserted) for the delay time period (t_D) after VDD voltage rise above V_{IT+}.
VDD	3	2	3	5	I	**Input supply voltage.** TLV803E, TLV809E, TLV810E monitor VDD voltage.
$\overline{\text{MR}}$	N/A	N/A	N/A	2	I	**Active-low manual reset input.** Pull this pin to a logic low ($V_{\overline{MR}_L}$) to assert a reset signal in the output pin. After the $\overline{\text{MR}}$ pin is left floating or pulled to $V_{\overline{MR}_H}$ the output goes to the nominal state after the reset delay time (t_D) expires. $\overline{\text{MR}}$ can be left floating when not in use.
PAD	N/A	N/A	N/A	3	—	**No Connection.** Thermal pad helps with thermal dissipation. PAD does not need to be soldered down. PAD can be connected to GND.

Copyright © 2021 Texas Instruments Incorporated

7 Specifications

7.1 Absolute Maximum Ratings

over operating free-air temperature range, unless otherwise noted[(1)]

		MIN	MAX	UNIT
Voltage	VDD pin	–0.3	6.5	V
	$\overline{\text{RESET}}$ (TLV809E), RESET (TLV810E)	–0.3	V_{DD} + 0.3 [(2)]	V
	$\overline{\text{RESET}}$ (TLV803E)	–0.3	6.5	V
Voltage	$\overline{\text{MR}}$	–0.3	V_{DD} + 0.3[(2)]	V
Current	Output sink and source current	-20	20	mA
Temperature[(3)]	Operating ambient, T_A	–40	125	°C
	Storage, T_{stg}	–65	150	

(1) Stresses beyond those listed under *Absolute Maximum Rating* may cause permanent damage to the device. These are stress ratings only, which do not imply functional operation of the device at these or any other conditions beyond those indicated under *Recommended Operating Condition*. Exposure to absolute-maximum-rated conditions (above the Recommended Operating Conditions) for extended periods may affect device reliability.
(2) The absolute maximum rating is (V_{DD} + 0.3) V or 6.5 V, whichever is smaller.
(3) As a result of the low dissipated power in this device, the junction temperature is assumed to be equal to the ambient temperature.

7.2 ESD Ratings

			VALUE	UNIT
$V_{(ESD)}$	Electrostatic discharge	Human body model (HBM), per ANSI/ESDA/JEDEC JS-001[(1)]	± 2000	V
		Charged device model (CDM), per JEDEC specification JESD22-C101[(2)]	± 500	

(1) JEDEC document JEP155 states that 500-V HBM allows safe manufacturing with a standard ESD control process.
(2) JEDEC document JEP157 states that 250-V CDM allows safe manufacturing with a standard ESD control process.

7.3 Recommended Operating Conditions

over operating free-air temperature range (unless otherwise noted)

		MIN	NOM	MAX	UNIT
V_{DD}	Input supply voltage	1.7		6	V
$V_{\overline{RESET}}$, V_{RESET}	$\overline{\text{RESET}}$ pin and RESET pin voltage	0		6	V
$I_{\overline{RESET}}$, I_{RESET}	$\overline{\text{RESET}}$ pin and RESET pin current	0		±5	mA
T_J	Junction temperature (free air temperature)	–40		125	°C
$V_{\overline{MR}}$	Manual reset pin voltage	0		V_{DD}	V

Copyright © 2021 Texas Instruments Incorporated

7.4 Thermal Information

THERMAL METRIC[1]		TLV803E, TLV809E, TLV810E			UNIT
		DPW (X2SON)	DCK (SC70-3)	DBZ (SOT23-3)	
		5 PINS	3 PINS	3 PINS	
$R_{\theta JA}$	Junction-to-ambient thermal resistance	457.1	300.5	254.8	°C/W
$R_{\theta JC(top)}$	Junction-to-case (top) thermal resistance	201.6	178.2	150.5	°C/W
$R_{\theta JB}$	Junction-to-board thermal resistance	320.4	166.5	140.1	°C/W
ψ_{JT}	Junction-to-top characterization parameter	22.8	70	48.1	°C/W
ψ_{JB}	Junction-to-board characterization parameter	318.8	165.2	139.1	°C/W
$R_{\theta JC(bot)}$	Junction-to-case (bottom) thermal resistance	N/A	N/A	N/A	°C/W

(1) For more information about traditional and new thermal metrics, see the Semiconductor and IC Package Thermal Metrics application report.

7.5 Electrical Characteristics

over operating range (T_A = –40°C to 125°C), 1.7 V ≤ V_{DD} ≤ 6 V, $R_{pull\text{-}up}$ = 10 kΩ to 6 V, 10 pF load at RESET pin, unless otherwise noted. Typical values are at 25°C, V_{DD} = 3.3V and V_{IT-} = 2.93 V.

PARAMETER		TEST CONDITIONS	MIN	TYP	MAX	UNIT
COMMON PARAMETERS						
V_{DD}	Input supply voltage		1.7		6	V
V_{IT-}	Input threshold voltage accuracy	T_A= –40°C to 125°C	–2	0.5	2	%
V_{HYS}	Hysteresis voltage	Hysteresis from V_{IT-}	0.9	1.2	1.5	%
I_{DD}	Supply current into VDD pin	V_{DD} = 3.3 V; V_{DD} > V_{IT+} (1)		0.25	1	µA
		V_{DD} = 6 V		0.4	1.2	µA
$R_{\overline{MR}}$	Manual reset pin internal pull-up resistance	X2SON (DPW) package only		100		kΩ
$V_{\overline{MR}_L}$	Manual reset pin logic low input				0.4	V
$V_{\overline{MR}_H}$	Manual reset pin logic high input		0.8V_{DD}			V
TLV809E (Push-Pull Active-Low)						
V_{POR}	Power on reset voltage (2)	V_{OL} ≤ 300 mV, $I_{OUT(Sink)}$ = 15 µA			700	mV
V_{OL}	Low level output voltage	V_{DD} = 1.7 V, V_{DD} < V_{IT-}, $I_{OUT(Sink)}$ = 500 µA			300	mV
		V_{DD} = 3.3 V, V_{DD} < V_{IT-}, $I_{OUT(Sink)}$ = 2 mA			300	mV
V_{OH}	High level output voltage	V_{DD} = 6 V, V_{DD} > V_{IT+}, $I_{OUT(Source)}$ = 4 mA	0.8V_{DD}			V
		V_{DD} = 3.3 V, V_{DD} > V_{IT+}, $I_{OUT(Source)}$ = 2 mA	0.8V_{DD}			V
TLV803E (Open-Drain Active-Low)						
V_{POR}	Power on reset voltage (2)	V_{OL} ≤ 300 mV, $I_{OUT(Sink)}$ = 15 µA			700	mV
V_{OL}	Low level output voltage	V_{DD} = 1.7 V, V_{DD} < V_{IT-}, $I_{OUT(Sink)}$ = 500 µA			300	mV
		V_{DD} = 3.3 V, V_{DD} < V_{IT-}, $I_{OUT(Sink)}$ = 2 mA			300	mV
$I_{lkg(OD)}$	Open drain output leakage current	V_{DD} = V_{PULLUP} = 6 V, V_{DD} > V_{IT+}		100	350	nA
TLV810E (Push-Pull Active-High)						
V_{OH}	High level output voltage	V_{DD} = 3.3 V, V_{DD} < V_{IT-}, $I_{OUT(Source)}$ = 2 mA	0.8V_{DD}			V
		V_{DD} = 1.7 V, V_{DD} < V_{IT-}, $I_{OUT(Source)}$ = 500 µA	0.8V_{DD}			V
V_{POR}	Power on Reset Voltage	V_{OH} ≥ 720 mV, $I_{OUT(Source)}$ = 15 µA			900	mV
V_{OL}	Low level output voltage	V_{DD} = 6 V, V_{DD} > V_{IT+}, $I_{OUT(Sink)}$ = 2 mA			300	mV
		V_{DD} = 3.3 V, V_{DD} > V_{IT+}, $I_{OUT(Sink)}$ = 500 µA			300	mV

(1) V_{IT+} = V_{IT-} + V_{HYS}
(2) Minimum V_{DD} voltage for a controlled output state. Below V_{POR}, the output cannot be determined.

Copyright © 2021 Texas Instruments Incorporated

7.6 Timing Requirements

over operating range (T_A = –40°C to 125°C), 1.7 V ≤ V_{DD} ≤ 6 V, $R_{pull-up}$ = 10 kΩ to 6 V (Open Drain only), 10 pF load at RESET pin, Overdrive = 10%, unless otherwise noted. Typical values are at 25°C, V_{DD} = 3.3 V and V_{IT-} = 2.93 V.

PARAMETER		TEST CONDITIONS	MIN	TYP	MAX	UNIT
t_{GI}	Glitch immunity	5 % Overdrive[1]		10		µs
t_{PD_HL}	Propagation delay from VDD falling below V_{IT-} to RESET	V_{DD} = (V_{IT+} + 30%) to (V_{IT-} – 10%)		30	50	µs
t_D	Release time or reset timeout period	Reset time delay variant A [2]	130	200	270	ms
		Reset time delay variant B [2]; R_{UP} = 100 kΩ, C_L = 100 pF, 30% Overdrive [3]		45	90	µs
		Reset time delay variant B [2]		40	80	µs
		Reset time delay variant C [2]	6.5	10	13.5	ms
		Reset time delay variant D [2]	33	50	67	ms
		Reset time delay variant F [2]	260	400	540	ms
$t_{\overline{MR}_PW}$ [4]	$\overline{MR}$ pin pulse duration to initiate RESET, $\overline{RESET}$			500		ns
$t_{\overline{MR}_RES}$ [4]	Propagation delay from $\overline{MR}$ low to RESET, $\overline{RESET}$	V_{DD} = 4.5 V, V_{MR} : $V_{\overline{MR}_H}$ to $V_{\overline{MR}_L}$		700		ns
$t_{\overline{MR}_tD}$ [4]	Delay from release $\overline{MR}$ to deasert RESET, $\overline{RESET}$	V_{DD} = 4.5 V, V_{MR} : $V_{\overline{MR}_L}$ to $V_{\overline{MR}_H}$	t_{D_MIN}	t_{D_TYP}	t_{D_MAX}	ms

(1) Overdrive = [(V_{DD}/ V_{IT-}) - 1] × 100%. Refer to section on VDD glitch immunity
(2) Refer to Device nomenclature table. VDD: (V_{IT-}-10%) to (V_{IT+} + 10%)
(3) Specified by design
(4) X2SON Package only

7.7 Timing Diagrams

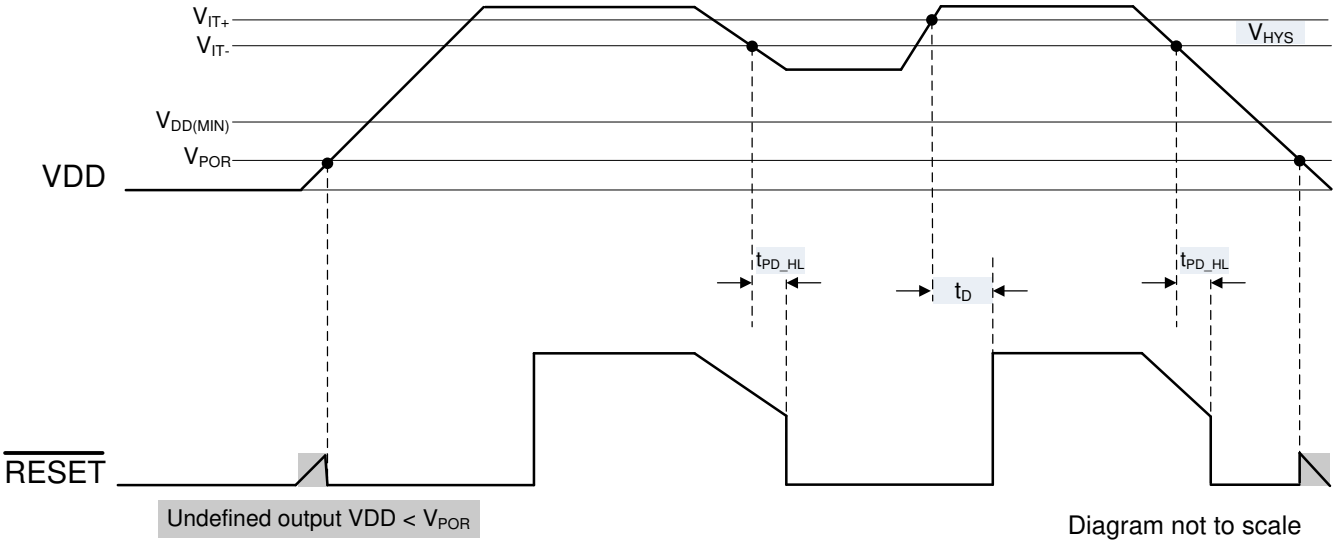

Figure 7-1. TLV803E, TLV809E Timing Diagram

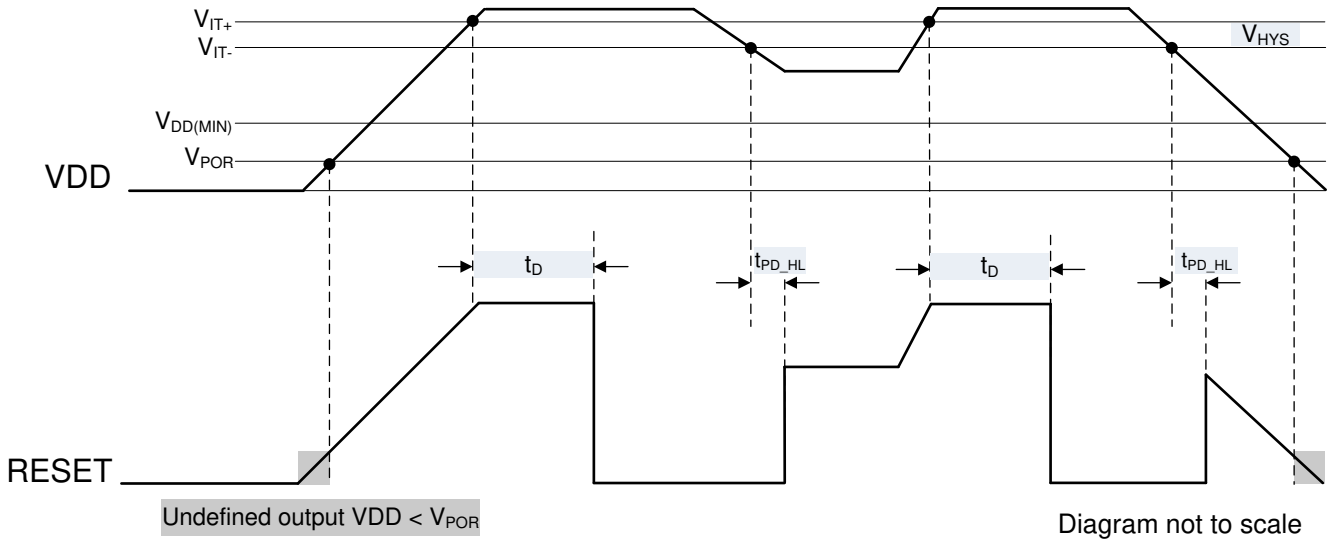

Figure 7-2. TLV810E Timing Diagram

Copyright © 2021 Texas Instruments Incorporated

7.8 Typical Characteristics

Typical characteristics show the typical performance of the TLV803E, TLV809E, and TLV810E devices. Test conditions are T_A = 25°C, VDD = 3.3 V, V_{IT-} = 2.93 V, $R_{pull-up}$ = 10 kΩ to 6 V, C_{Load} = 50 pF, unless otherwise noted.

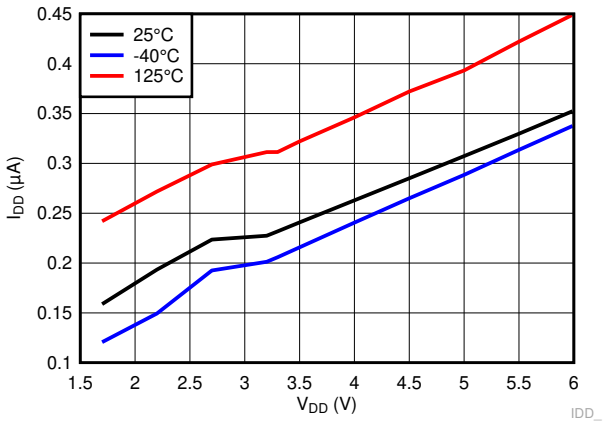

Figure 7-3. Supply Current Versus Supply Voltage for TLV803EA29

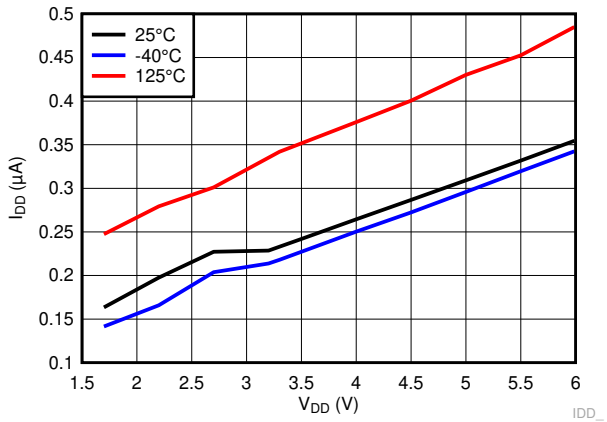

Figure 7-4. Supply Current Versus Supply Voltage for TLV809EA29

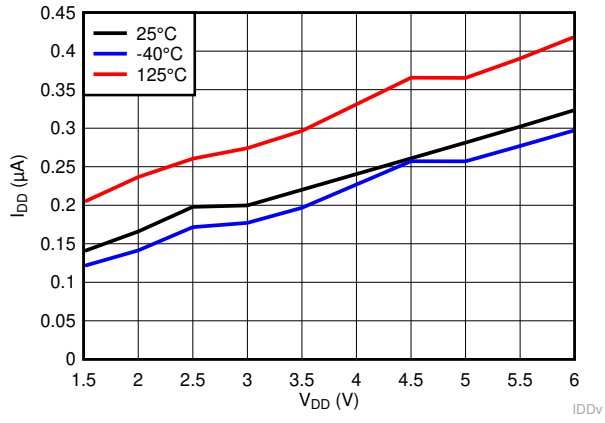

Figure 7-5. Supply Current Versus Supply Voltage for TLV810EA29

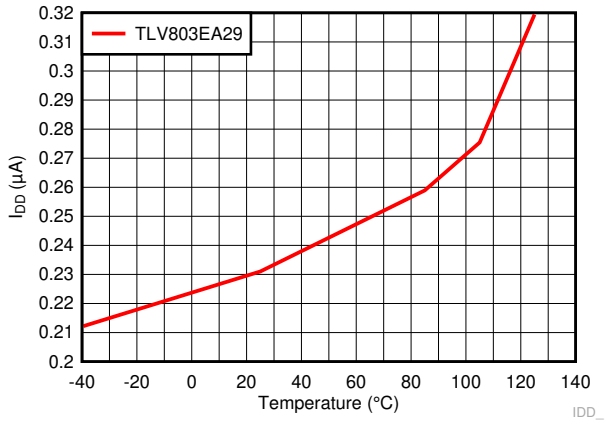

Figure 7-6. Supply Current Verses Temperature for TLV803EA29, VDD = 3.3 V

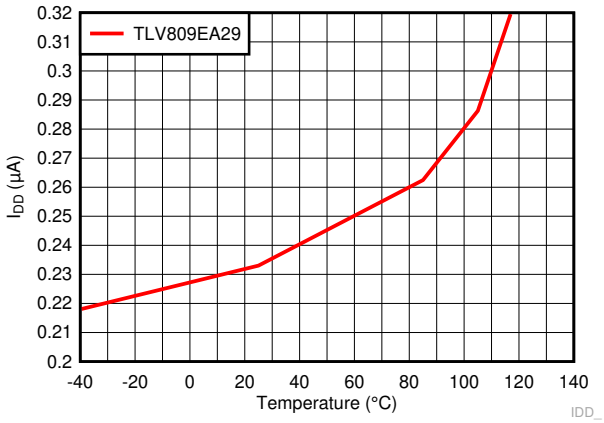

Figure 7-7. Supply Current Verses Temperature for TLV809EA29, VDD = 3.3 V

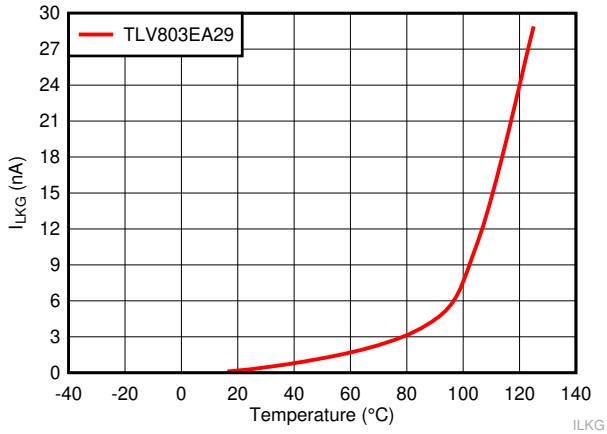

Figure 7-8. Leakage Current Verses Temperature for TLV803EA29

7.8 Typical Characteristics (continued)

Typical characteristics show the typical performance of the TLV803E, TLV809E, and TLV810E devices. Test conditions are T_A = 25°C, VDD = 3.3 V, V_{IT-} = 2.93 V, $R_{pull-up}$ = 10 kΩ to 6 V, C_{Load} = 50 pF, unless otherwise noted.

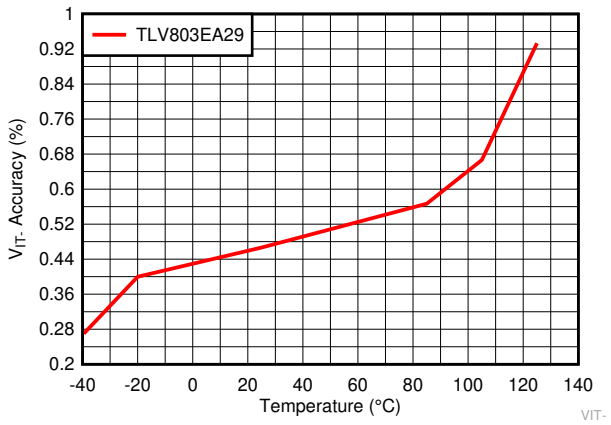

Figure 7-9. Voltage Threshold Accuracy Verses Temperature for TLV803EA29

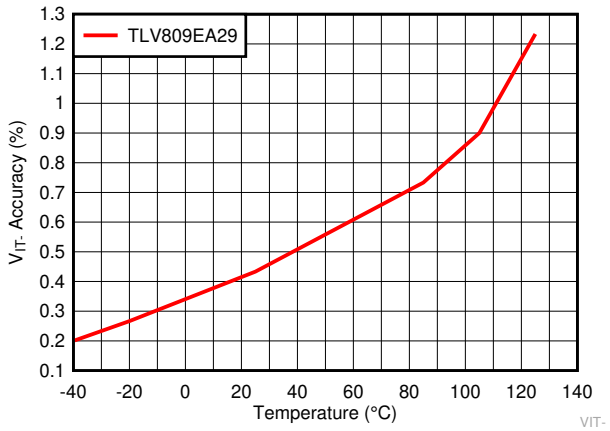

Figure 7-10. Voltage Threshold Accuracy Verses Temperature for TLV809EA29

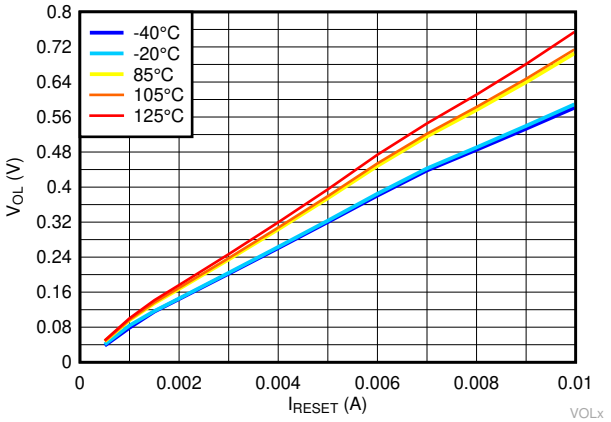

Figure 7-11. Low Voltage Output Versus Output Current for TLV803EA29, VDD = 1.7 V

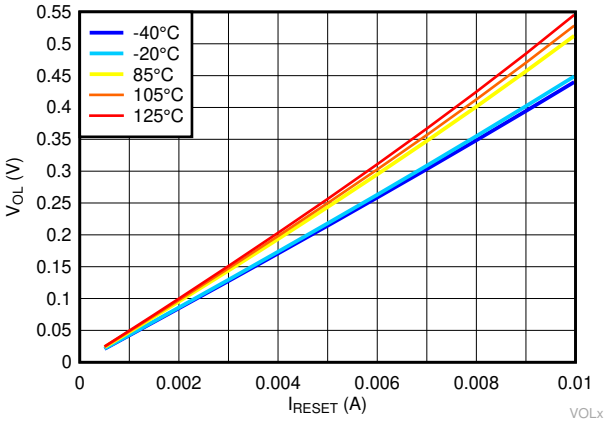

Figure 7-12. Low Voltage Output Versus Output Current for TLV809EA29, VDD = 1.7 V

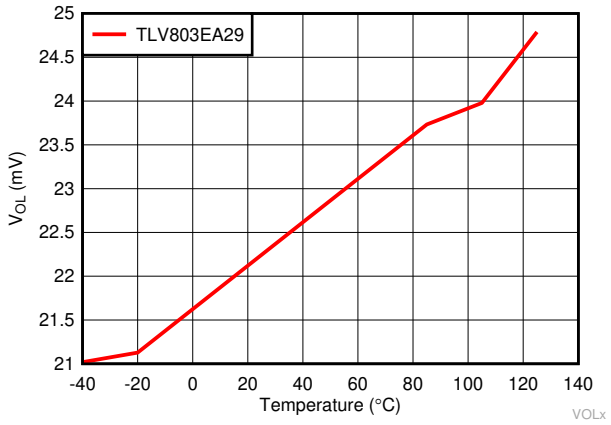

Figure 7-13. Low Voltage Output Verses Temperature for TLV803EA29, VDD = 1.7 V

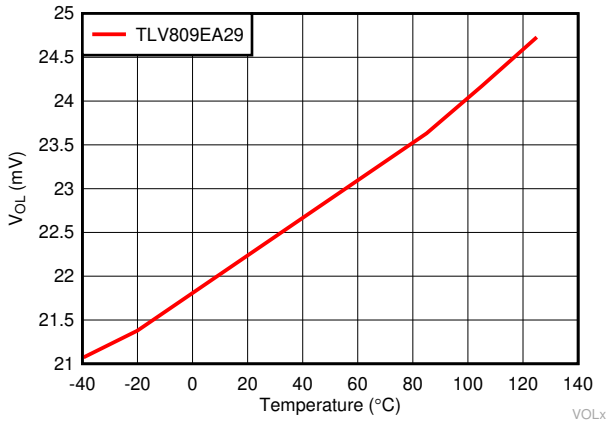

Figure 7-14. Low Voltage Output Verses Temperature for TLV809EA29, VDD = 1.7 V

Copyright © 2021 Texas Instruments Incorporated

7.8 Typical Characteristics (continued)

Typical characteristics show the typical performance of the TLV803E, TLV809E, and TLV810E devices. Test conditions are T_A = 25°C, VDD = 3.3 V, V_{IT-} = 2.93 V, $R_{pull-up}$ = 10 kΩ to 6 V, C_{Load} = 50 pF, unless otherwise noted.

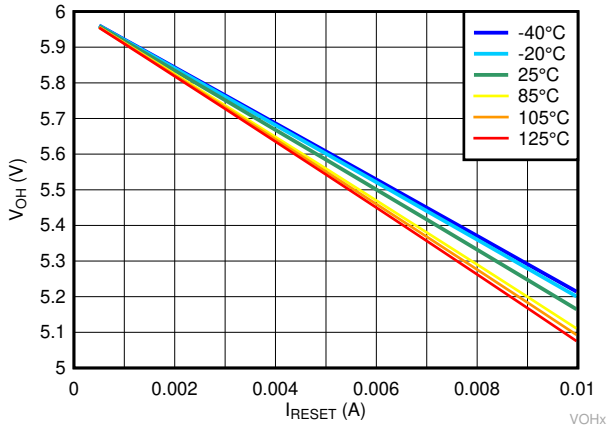

Figure 7-15. High Voltage Output Versus Output Current for TLV809EA29, VDD = 6 V

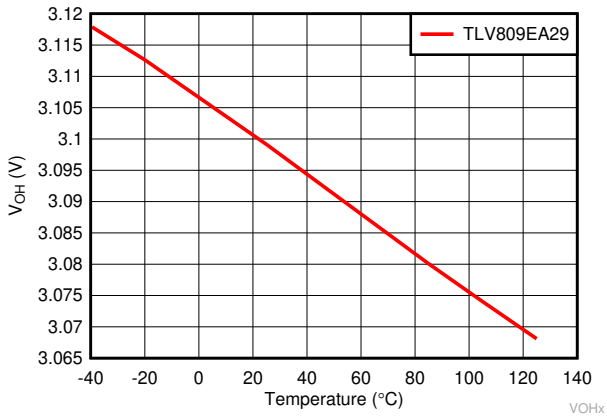

Figure 7-16. High Voltage Output Verses Temperature for TLV809EA29, VDD = 3.3 V

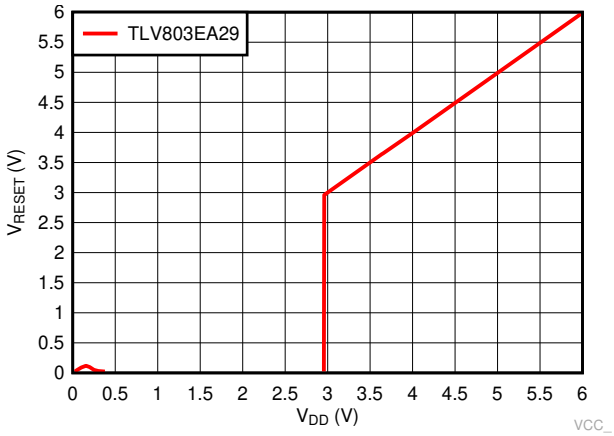

Figure 7-17. Reset Voltage Output Versus Voltage Input for TLV803EA29, $V_{pull-up}$ = VDD, $R_{pull-up}$ = 10 kΩ

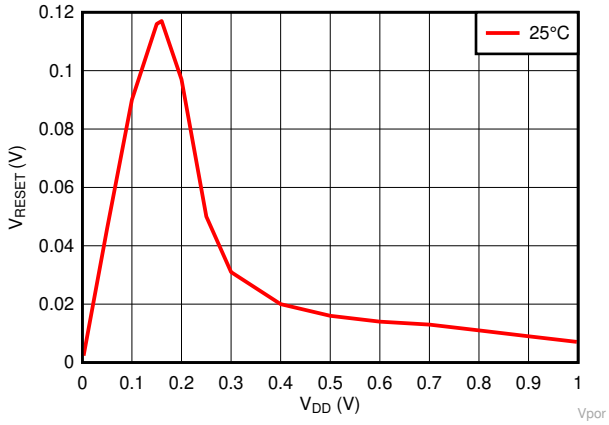

Figure 7-18. Reset Voltage Output Versus Voltage Input for TLV803EA29, $R_{pull-up}$ = 10 kΩ

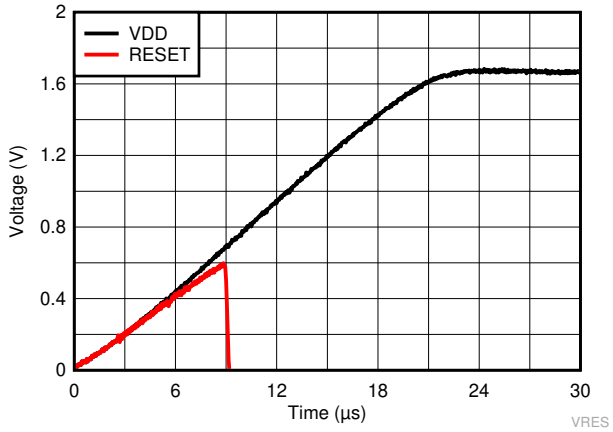

Figure 7-19. Transient Power-on-Reset Voltage for TLV809EA30, I_{RESET} = 15 µA

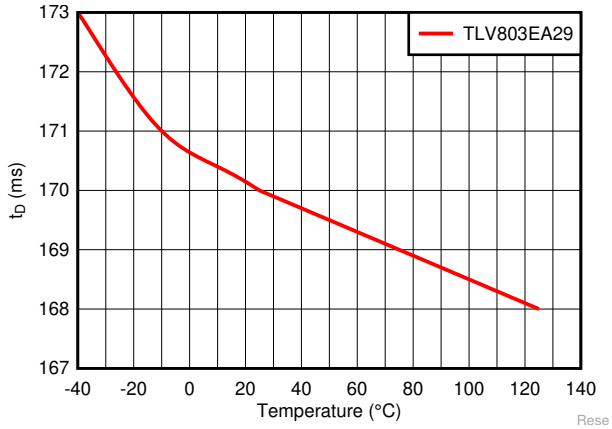

Figure 7-20. Reset Delay Time Verses Temperature for TLV803EA29

7.8 Typical Characteristics (continued)

Typical characteristics show the typical performance of the TLV803E, TLV809E, and TLV810E devices. Test conditions are T_A = 25°C, VDD = 3.3 V, V_{IT-} = 2.93 V, $R_{pull-up}$ = 10 kΩ to 6 V, C_{Load} = 50 pF, unless otherwise noted.

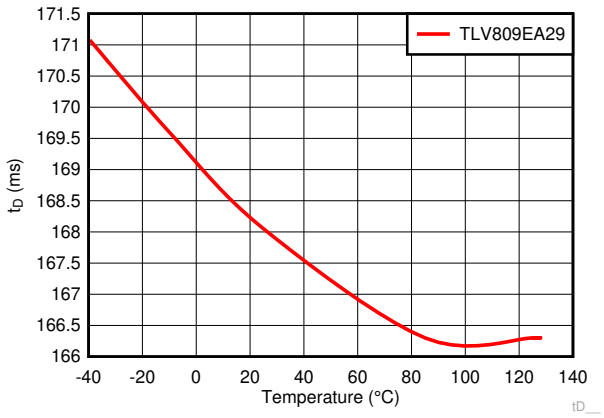

Figure 7-21. Reset Delay Time Verses Temperature for TLV809EA29

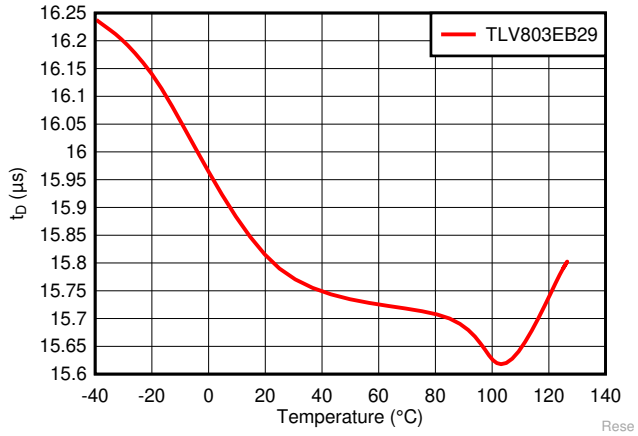

Figure 7-22. Reset Delay Time Verses Temperature for TLV803EB29

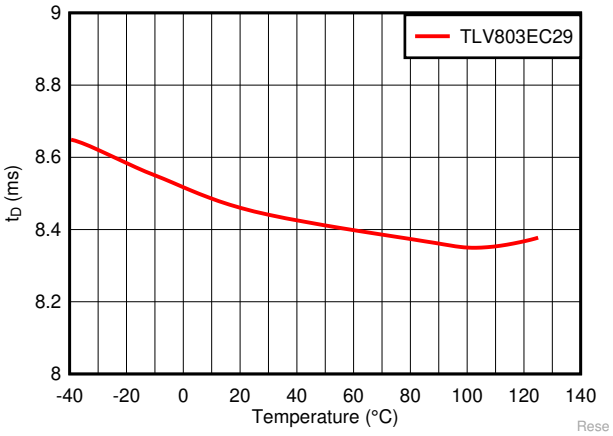

Figure 7-23. Reset Delay Time Verses Temperature for TLV803EC29

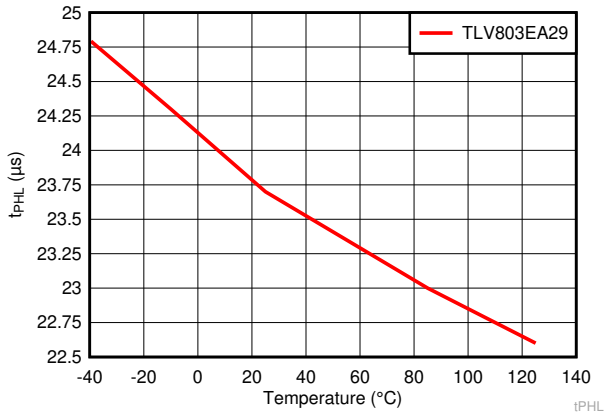

Figure 7-24. High-to-Low Propagation Delay Verses Temperature for TLV803EA29

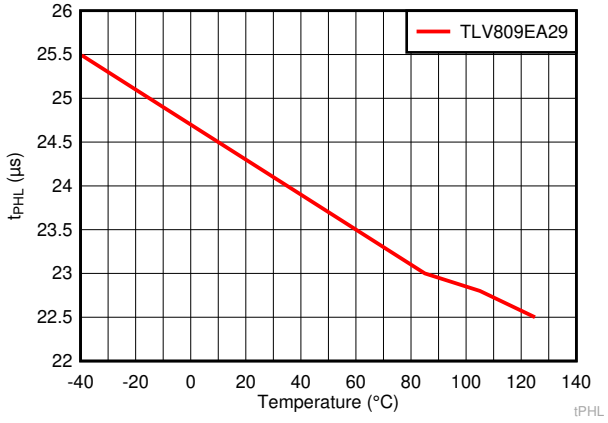

Figure 7-25. High-to-Low Propagation Delay Verses Temperature for TLV809EA29

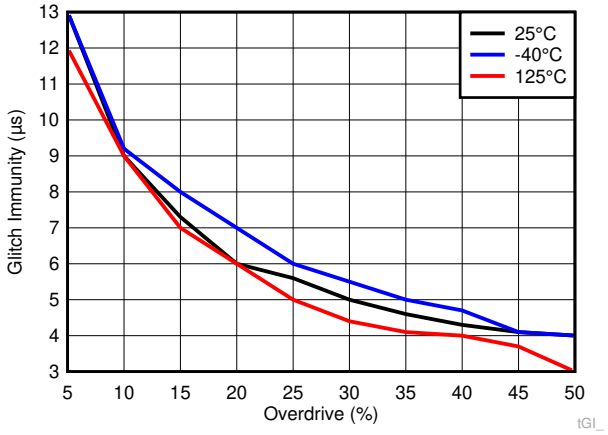

Figure 7-26. Glitch Immunity Versus Overdrive for TLV803EA29

Copyright © 2021 Texas Instruments Incorporated

7.8 Typical Characteristics (continued)

Typical characteristics show the typical performance of the TLV803E, TLV809E, and TLV810E devices. Test conditions are T_A = 25°C, VDD = 3.3 V, V_{IT-} = 2.93 V, $R_{pull-up}$ = 10 kΩ to 6 V, C_{Load} = 50 pF, unless otherwise noted.

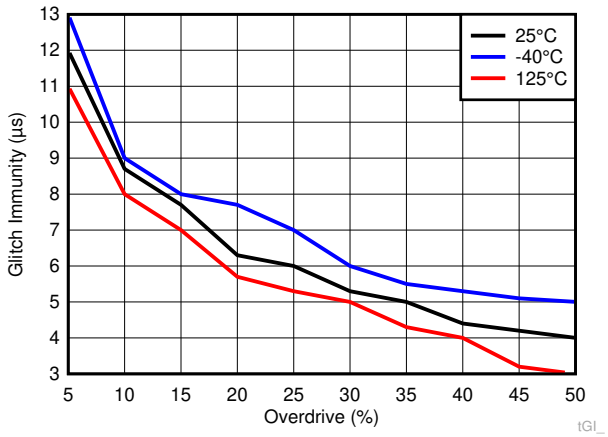

Figure 7-27. Glitch Immunity Versus Overdrive for TLV809EA29

8 Detailed Description

8.1 Overview

The TLV803E, TLV809E, TLV810E is a family of easy to implement low power, small size voltage supervisors (Reset ICs) with fixed threshold voltage and fixed reset delay. The TLV803E has open-drain active-low output topology which requires an external pull-up resistor, TLV809E has push-pull active-low output topology and TLV810E has push-pull active-high output topology. This family of devices features include integrated resistor divider threshold with hysteresis and a glitch immunity filter.

These devices are available in SOT-23 (3) and SC70 (3) industry standard package and pinout as well as a very small X2SON (5) package.

8.2 Functional Block Diagram

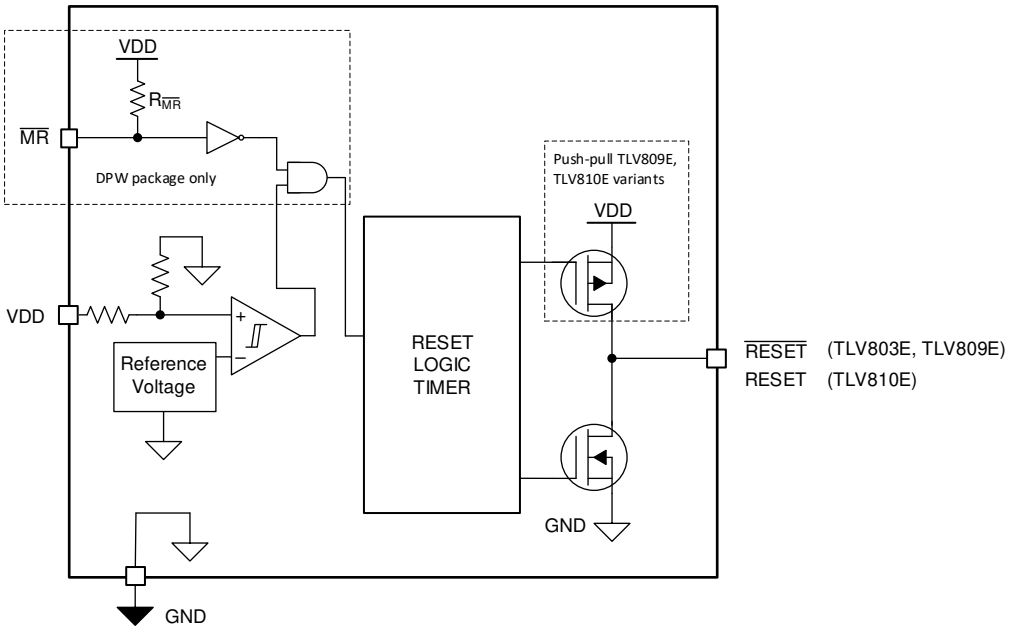

8.3 Feature Description

8.3.1 Input Voltage (VDD)

VDD pin is monitored by the internal comparator with integrated reference to indicate when VDD falls below the fixed threshold voltage. VDD also functions as the supply for the following:

- Internal bandgap (reference voltage)
- Internal regulator
- State machine
- Buffers
- Other control logic blocks

Good design practice involves placing a 0.1-µF to 1-µF bypass capacitor at VDD input for noisy applications and to ensure enough charge is available for the device to power up correctly. The reset output is undefined when VDD is below V_{POR}.

Copyright © 2021 Texas Instruments Incorporated

8.3.2 VDD Hysteresis

The internal comparator has built-in hysteresis to avoid erroneous output reset release. If the voltage at the VDD pin falls below the falling voltage threshold V_{IT-}, the output reset is asserted. When the voltage at the VDD pin rises above the rising voltage threshold (V_{IT+}) equivalent to V_{IT-} plus hysteresis (V_{HYS}), the output reset is deasserted after t_D reset time delay.

8.3.3 VDD Glitch Immunity

These devices are immune to quick voltage transient or excursion on VDD. Sensitivity to transients depends on both pulse duration (t_{GI}) found in *Section 7.6* and transient overdrive. Overdrive is defined by how much VDD exceeds the specified threshold. Threshold overdrive is calculated as a percent of the threshold in question, as shown in Equation 1.

$$\text{Overdrive} = \left| \left(\text{VDD} / (V_{IT-} - 1)\right) \times 100\% \right| \quad (1)$$

where

- V_{IT-} is the threshold voltage
- VDD is the input voltage crossing V_{IT-}

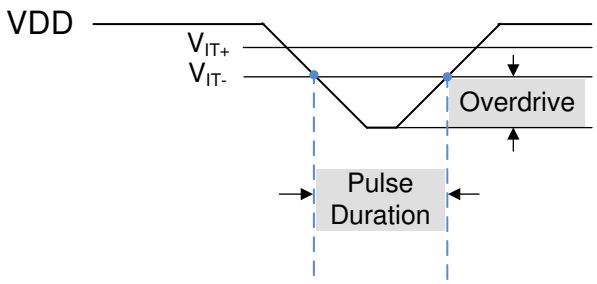

Figure 8-1. Overdrive Versus Pulse Duration

TLV803E, TLV809E, and TLV810E devices have built-in glitch immunity (t_{GI}) of 10 µs typical as shown in *Section 7.6*. Figure 8-2 shows that VDD must fall below V_{IT-} for t_{GI}, otherwise the faling transistion is ignored. When VDD falls below V_{IT-} for t_{GI}, $\overline{\text{RESET}}$ transitions low to indicate a fault condition after the propagation delay high-to-low (t_{PDHL}). When VDD rises above V_{IT+}, $\overline{\text{RESET}}$ only deasserts to logic high indicating there is no more fault condition only if VDD remains above V_{IT+} for longer than the reset delay (t_D).

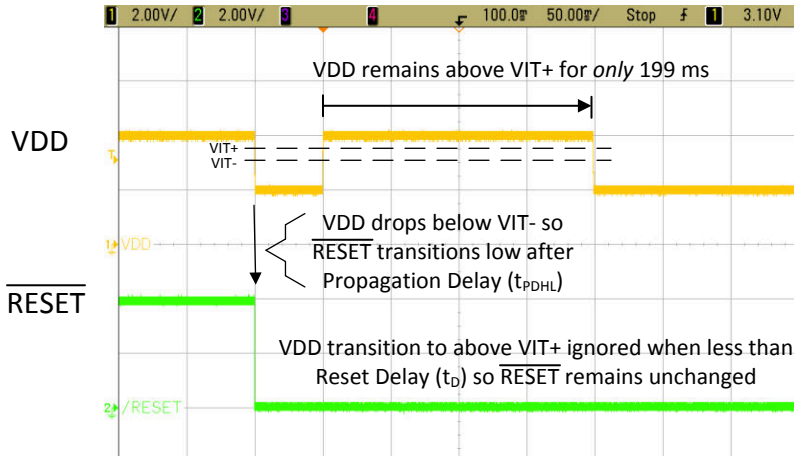

Figure 8-2. Glitch Immunity when VDD Rises Above V_{IT+} for Less than $\overline{\text{RESET}}$ Delay (TLV803EA29)

8.3.4 Manual Reset ($\overline{MR}$) Input for X2SON (DPW) Package Only

The manual reset ($\overline{MR}$) input allows a processor GPIO or other logic circuits to initiate a reset. A logic low on $\overline{MR}$ with pulse duration longer than $t_{\overline{MR}_RES}$ will cause reset output to assert. After $\overline{MR}$ returns to a logic high ($V_{\overline{MR}_H}$) and VDD is above V_{IT+}, reset is deasserted after the user programmed reset time delay (t_D) expires.

If $\overline{MR}$ is not controlled externally, then $\overline{MR}$ can be left disconnected. $\overline{MR}$ is internally connected to VDD through a pull-up resistor $R_{\overline{MR}}$ shown in Section 8.2. If the logic signal controlling $\overline{MR}$ is less than VDD, then additional current flows from VDD into $\overline{MR}$ internally. For minimum current consumption, drive $\overline{MR}$ to either VDD or GND. $V_{\overline{MR}}$ should not be higher than VDD voltage.

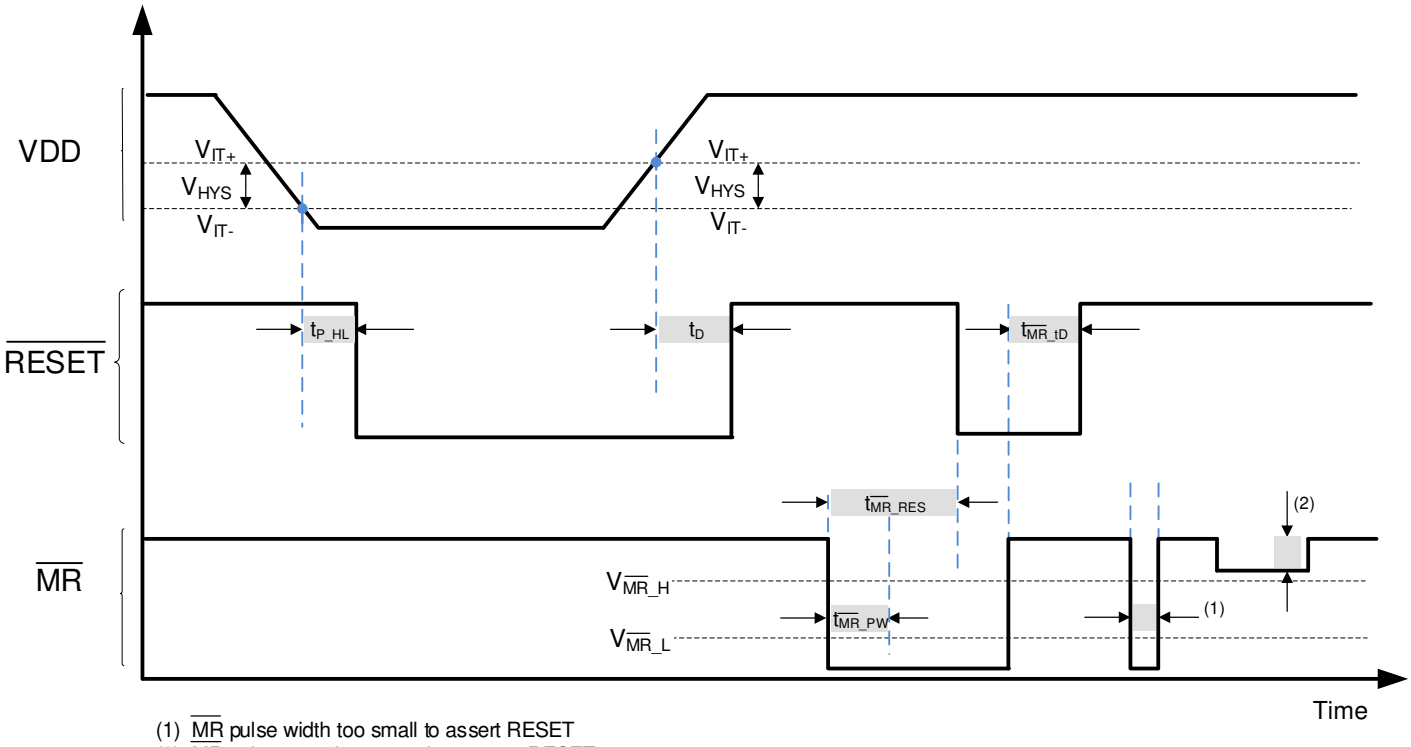

(1) $\overline{MR}$ pulse width too small to assert RESET
(2) MR voltage not low enough to assert RESET

Figure 8-3. Timing Diagram $\overline{MR}$ and $\overline{RESET}$ for X2SON (DPW) Package

8.3.5 Output Logic

8.3.5.1 $\overline{RESET}$ Output, Active-Low

$\overline{RESET}$ remains high (deasserted) as long as VDD is above the negative threshold (V_{IT-}). If VDD falls below the negative threshold (V_{IT-}), then reset is asserted and $\overline{RESET}$ transistions to logic low (V_{OL}).

When VDD rises above V_{IT+}, the delay circuit holds $\overline{RESET}$ active and logic low for the specified reset delay period (t_D). When the reset delay has elapsed, the $\overline{RESET}$ pin transistions to high voltage (V_{OH}).

The open-drain version requires an external pull-up resistor to hold the $\overline{RESET}$ pin high because the internal MOSFET turns off causing RESET output to pull-up to the pull-up voltage. Connect the pull-up resistor to the desired interface voltage logic. $\overline{RESET}$ can be pulled up to any voltage up to maximum voltage independent of the VDD voltage. To ensure proper voltage levels, take care when choosing the pull-up resistor values. The pull-up resistor value is determined by V_{OL}, the output capacitive loading, and the output leakage current ($I_{lkg(OD)}$).

The push-pull variant does not require an external pull-up resistor.

Copyright © 2021 Texas Instruments Incorporated

8.3.5.2 RESET Output, Active-High

RESET remains logic low (deasserted) as long as VDD is above the positive threshold (V_{IT+}). If VDD falls below the negative threshold (V_{IT-}), then reset is asserted and RESET transistions to logic high (V_{OH}).

When VDD rises above V_{IT+}, the delay circuit holds RESET active and logic high for the specified reset delay period (t_D). When the reset delay has elapsed the RESET pin transistions to low voltage (V_{OL}).

8.4 Device Functional Modes

Table 8-1 summarizes the various functional modes of the device.

Table 8-1. Truth Table

V_{DD}	$\overline{MR}$ (X2SON package only)	RESET (Active-High)	$\overline{RESET}$(Active-Low)
$V_{DD} < V_{POR}$	N/A	Undefined	Undefined
$V_{POR} < V_{DD} < V_{IT-}$ (1)	N/A	H	L
$V_{DD} \geq V_{IT-}$	L	H	L
$V_{DD} \geq V_{IT-}$	H	L	H

(1) When V_{DD} falls below $V_{DD(MIN)}$, output reset is held asserted until V_{DD} falls below V_{POR}.

8.4.1 Normal Operation (VDD > $V_{DD(min)}$)

When VDD voltage is greater than $V_{DD(min)}$, the reset signal is determined by the voltage on the VDD pin with respect to the trip point (V_{IT-}) and the $\overline{MR}$ pin voltage (X2SON package only).

8.4.2 VDD Between VPOR and $V_{DD(min)}$

When the voltage on VDD is less than the $V_{DD(min)}$ voltage and greater than the power-on-reset voltage (V_{POR}), the reset signal is asserted.

8.4.3 Below Power-On-Reset (VDD < V_{POR})

When the voltage on VDD is lower than V_{POR}, the device does not have enough bias voltage to internally pull the asserted output low or high and reset voltage level is undefined.

Copyright © 2021 Texas Instruments Incorporated

9 Application and Implementation

Note

Information in the following applications sections is not part of the TI component specification, and TI does not warrant its accuracy or completeness. TI's customers are responsible for determining suitability of components for their purposes, as well as validating and testing their design implementation to confirm system functionality.

9.1 Application Information

The TLV803E, TLV809E, and TLV810E devices are used for voltage monitoring. These devices have only three pins: VDD, GND, and $\overline{\text{RESET}}$ (or RESET for TLV810E). There are at the most two external components: a capacitor on the VDD pin and a pull-up resistor on the $\overline{\text{RESET}}$/RESET to VDD or another pull-up voltage for the open-drain variants. The design involves choosing the device with the desired voltage threshold and output topology and adding these components, if needed, as explained in the following sections.

9.2 Typical Application - Voltage Rail Monitoring

A typical application for TLV803E, TLV809E, and TLV810E devices is voltage rail monitoring. This rail can be the input power supply or the output of an LDO or DC/DC converter. Figure 9-1 shows the TLV803EA29 monitoring the supply rail for a DSP, FPGA, or ASIC. This rail is at 3.3 V and generated by an LDO with an input power supply of 5 V. The supervisor is needed to make sure that the supply to the MCU/ASIC/FPGA/DSP is above a certain voltage threshold. If the supply voltage drops below a certain threshold, supervisor generates a reset output to indicate to the MCU that the supply is going down so that the MCU can take actions to save register data before supply enters brown-out conditions.

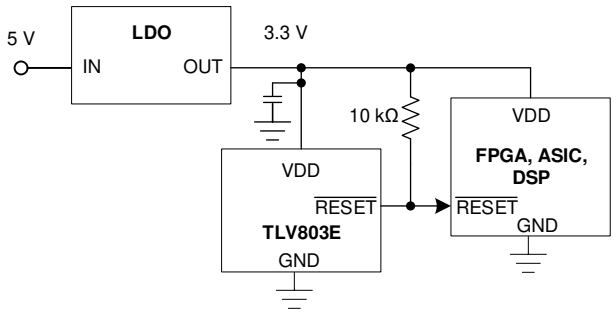

Figure 9-1. The Output of LDO Powering the MCU is Monitored by the TLV803EA29

9.2.1 Design Requirements

This design monitors a 3.3-V rail and flags an undervoltage fault at the $\overline{\text{RESET}}$ output when supply rail falls approximately 12% below the nominal rail voltage. The TLV803E device has an open-drain output topology so an external pull-up resistor is required and is calculated to ensure that V_{OL} does not exceed max limit given the $I_{\overline{\text{RESET}}/\text{RESET}}$ spec of ±5 mA is not violated at the expected supply voltage. *Section 7.5* table provides 500 µA Isink for 1.7 V VDD, which is the closest voltage to this design example. Using 500 µA of Isink and 300 mV max V_{OL}, gives us 5.36kΩ for the external pull-up resistor. Any value greater than 5.36kΩ would ensure that V_{OL} will not exceed 300 mV max specification. If you are using the TLV809E device variant, no pull-up resistor is required because TLV809E has push-pull output topology.

Copyright © 2021 Texas Instruments Incorporated

9.2.2 Detailed Design Procedure

Select the TLV803EA29DBZR to satisfy the voltage threshold requirement for 3.3-V rail monitoring. As mentioned in Table 12-1, the TLV803EA29DBZR triggers an undervoltage fault at the $\overline{RESET}$ output when VDD falls below V_{IT-} which is 2.93 V for this device variant. Place a pull-up resistor on $\overline{RESET}$ to VDD to satisfy the output logic requirement while not violating the I_{RESET} recommended limit.

9.2.3 Application Curves

Figure 9-2 and Figure 9-3 show the TLV803EA29 functionality. In Figure 9-2, the VDD supply voltage drops from 30% above V_{IT-} = 3.8 V to 10% below V_{IT-} = 2.6 V with a 0.1-µF capacitor on VDD. The $\overline{RESET}$ output is connected to VDD through the pull-up resistor so when the VDD supply voltage drops. The $\overline{RESET}$ output discharges down to the VDD supply voltage through the pull-up resistor and $\overline{RESET}$ pin capacitance. Once the high-to-low propagation delay t_{PD_HL} expires, the internal MOSFET turns on and asserts $\overline{RESET}$ to logic low. Note that t_{PD_HL} varies with VDD specifically on how much VDD drops and how quickly in addition to the VDD and $\overline{RESET}$ pin capacitances. In Figure 9-3, VDD rises from 2 V to 4 V and the $\overline{RESET}$ output deasserts to logic high after the reset delay time (t_D) expires.

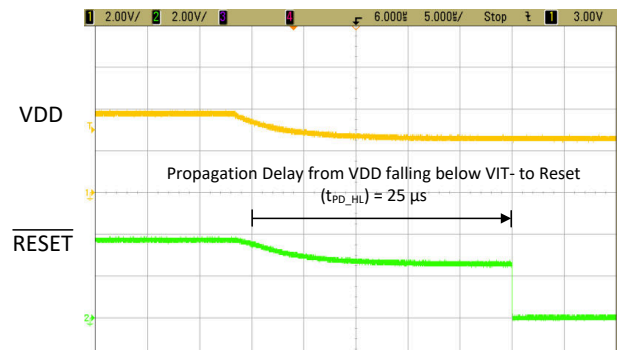

Figure 9-2. Propagation Delay when Fault Occurs after VDD Falls Below V_{IT-} (TLV803EA29 No Load) (1) (2)

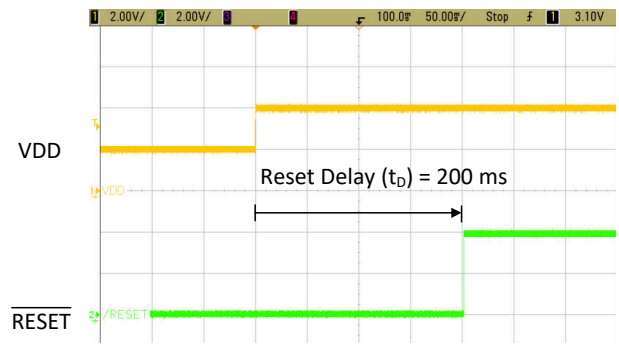

Figure 9-3. $\overline{RESET}$ Delay when Returning from Fault after VDD Rises Above V_{IT+} (TLV803EA29)

1. Typical t_{PD_HL}= 30 µs for VDD falling from (V_{IT+} + 30%) to (V_{IT-} - 10%).
2. VDD does not fall all the way to 0 V so $\overline{RESET}$ momentarily discharges to VDD until t_{PD_HL} expires.

9.3 Typical Application - Overvoltage Monitoring

A typical use case for the push-pull active-high device variant TLV810E is overvoltage monitoring. The TLV810E can monitor a power supply, a MCU power rail, or a battery during charging for example. The VDD pin monitors the voltage rail and once VDD rises above VIT+, the RESET output deactivates to logic low after the reset delay time t_D. If VDD falls below V_{IT-}, the RESET output activates to logic high after the propagation delay (t_{PD_HL}). The voiltage thresholds and the reset delay time depends on the device variant. See Section 5 for device variant naming nomenclature.

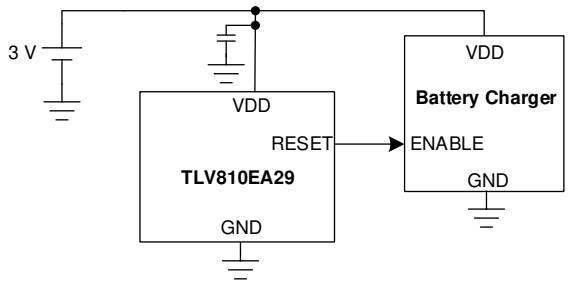

Figure 9-4. TLV810E Overvoltage Monitor Circuit for Battery Charger

9.3.1 Design Requirements

In this application design, the TLV810E device is monitoring a 3 V battery connected to a battery charger. The battery charger turns on when the battery voltage is below 2.93 V and turns off once the battery charges to 2.96 V and remains above 2.96 V for at least 200 ms. The design must be low power and not consume more than 500 nA typical.

9.3.2 Detailed Design Procedure

Select the TLV810EA29 to accomplish this design. The TLV810EA29 is a push-pull active-high device with a V_{IT-} = 2.9 V and V_{IT+} = 2.9 + 1.2% = 2.93 V. Because the device is a push-pull output and the device threshold meets the design requirements, no external resistors are needed. The TLV810EA29 device variant comes with 200 ms reset delay time meaning VDD must be above V_{IT+} for at least 200 ms for the RESET output to transistion to logic low to turn off the battery charger. This device meets the low power requirement because the TLV810E only consumes 250 nA typical.

Copyright © 2021 Texas Instruments Incorporated

10 Power Supply Recommendations

These devices are designed to operate from an input supply range of 1.7 V to 6 V. An input supply capacitor is recommended between the VDD pin and GND pin. If the voltage supply that provides power to VDD is susceptible to any large voltage transient that can exceed VDD maximum, the user must take additional precautions.

Copyright © 2021 Texas Instruments Incorporated

11 Layout

11.1 Layout Guidelines

Make sure that the connection to the VDD pin is low impedance. Good analog design practice recommends placing a minimum 0.1-µF ceramic capacitor as close to the VDD pin as possible. A pull-up resistor is required for the open-drain output. Place the pull-up resistor on the $\overline{\text{RESET}}$ pin as close to the pin as possible.

11.2 Layout Example

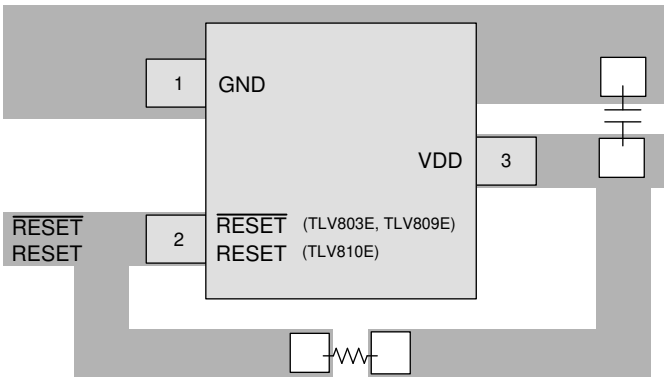

Figure 11-1. TLV803E, TLV809E, and TLV810E SOT23 (DBZ) Layout Example

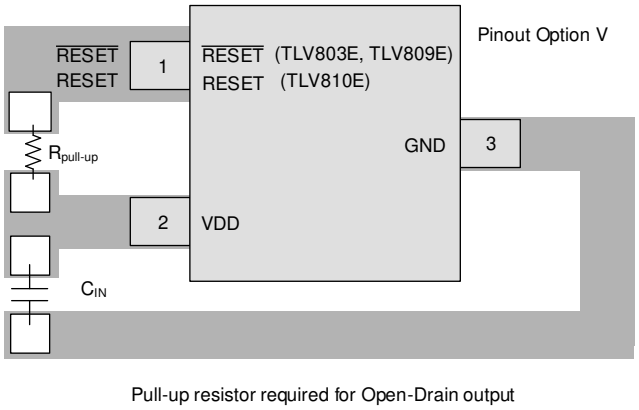

Figure 11-2. TLV803E, TLV809E, and TLV810E SOT23 (DBZ) V pinout Layout Example

Copyright © 2021 Texas Instruments Incorporated

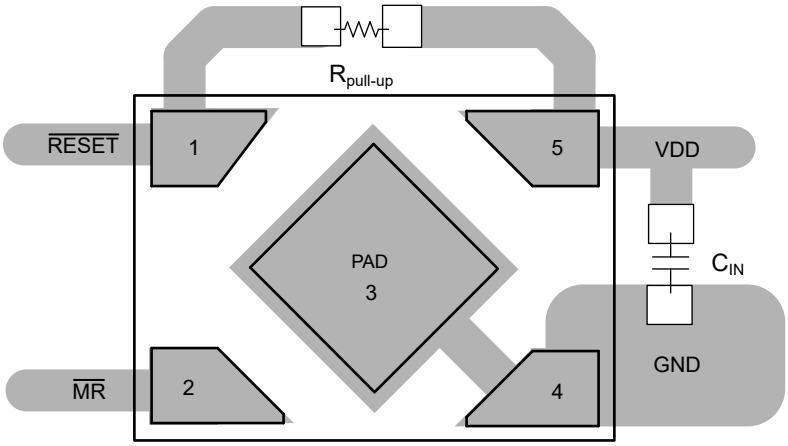

Top View
Pull-up resistor required for Open-Drain output
Connection between PAD and GND is optional

Figure 11-3. TLV803E, TLV809E, and TLV810E X2SON (DPW) Layout Example

12 Device and Documentation Support

12.1 Device Support

12.1.1 Device Nomenclature

Table 12-1 shows how to decode the function of the device based on its part number. For example: TLV803EA29DBZR is open-drain, active-low, 200 ms reset delay, 2.93 V threshold voltage, Pin 1 = GND, SOT23-3 pin package, and large reel option.

Table 12-1 shows all the possible variants of the TLV80xE and TLV81xE. Refer to the orderable device information table for the options available to order. Contact Texas Instruments for the details and availability of devices not in the orderable device information table.

Table 12-1. Device Naming Convention

DESCRIPTION	NOMENCLATURE	VALUE
Part Number	TLV803E	Open-Drain, Active-Low
	TLV809E	Push-Pull, Active-Low
	TLV810E	Push-Pull, Active-High
Reset Time Delay Option	A	200 ms
	B	40 µs
	C	10 ms
	D	50 ms
	F	400 ms
Threshold Voltage Option	17	1.7 V
	18	1.8 V
	19	1.9 V
	22	2.25 V
	24	2.4 V
	26	2.64 V
	29	2.93 V
	30	3.08 V
	33	3.3 V
	42	4.2 V
	43	4.38 V
	45	4.55 V
	46	4.63 V
Pinout Indicator (DBZ Package Only)	R	Pin 1 = $\overline{\text{RESET}}$, Pin 2 = GND, Pin 3 = VDD
	V	Pin 1 = $\overline{\text{RESET}}$, Pin 2 = VDD, Pin 3 = GND
Package Option	DBZ	SOT23-3 pin
	DCK	SC70-3 pin
	DPW	X2SON-5 pin
Reel	R	Large reel

Copyright © 2021 Texas Instruments Incorporated

12.2 Documentation Support

12.2.1 Related Documentation

For related documentation see the following:

- Texas Instruments, *TLV803EA29EVM User Guide*
- Texas Instruments, *Voltage Supervisors (Reset ICs): Frequently Asked Questions (FAQs)*

12.3 Receiving Notification of Documentation Updates

To receive notification of documentation updates, navigate to the device product folder on ti.com. Click on *Subscribe to updates* to register and receive a weekly digest of any product information that has changed. For change details, review the revision history included in any revised document.

12.4 Support Resources

TI E2E™ support forums are an engineer's go-to source for fast, verified answers and design help — straight from the experts. Search existing answers or ask your own question to get the quick design help you need.

Linked content is provided "AS IS" by the respective contributors. They do not constitute TI specifications and do not necessarily reflect TI's views; see TI's Terms of Use.

12.5 Trademarks

TI E2E™ is a trademark of Texas Instruments.
All trademarks are the property of their respective owners.

12.6 Electrostatic Discharge Caution

This integrated circuit can be damaged by ESD. Texas Instruments recommends that all integrated circuits be handled with appropriate precautions. Failure to observe proper handling and installation procedures can cause damage.

ESD damage can range from subtle performance degradation to complete device failure. Precision integrated circuits may be more susceptible to damage because very small parametric changes could cause the device not to meet its published specifications.

12.7 Glossary

TI Glossary	This glossary lists and explains terms, acronyms, and definitions.

13 Mechanical, Packaging, and Orderable Information

The following pages include mechanical, packaging, and orderable information. This information is the most current data available for the designated devices. This data is subject to change without notice and revision of this document. For browser-based versions of this data sheet, refer to the left-hand navigation.

PACKAGING INFORMATION

Orderable part number	Status (1)	Material type (2)	Package | Pins	Package qty | Carrier	RoHS (3)	Lead finish/ Ball material (4)	MSL rating/ Peak reflow (5)	Op temp (°C)	Part marking (6)
TLV803EA17DPWR	Active	Production	X2SON (DPW) | 5	3000 | LARGE T&R	Yes	NIPDAU	Level-2-260C-1 YEAR	-40 to 125	IT
TLV803EA17DPWR.A	Active	Production	X2SON (DPW) | 5	3000 | LARGE T&R	Yes	NIPDAU	Level-2-260C-1 YEAR	-40 to 125	IT
TLV803EA18DPWR	Active	Production	X2SON (DPW) | 5	3000 | LARGE T&R	Yes	NIPDAU	Level-2-260C-1 YEAR	-40 to 125	IV
TLV803EA18DPWR.A	Active	Production	X2SON (DPW) | 5	3000 | LARGE T&R	Yes	NIPDAU	Level-2-260C-1 YEAR	-40 to 125	IV
TLV803EA22DBZR	Active	Production	SOT-23 (DBZ) | 3	3000 | LARGE T&R	Yes	NIPDAU | SN	Level-1-260C-UNLIM	-40 to 125	322A
TLV803EA22DBZR.A	Active	Production	SOT-23 (DBZ) | 3	3000 | LARGE T&R	Yes	NIPDAU	Level-1-260C-UNLIM	-40 to 125	322A
TLV803EA22DCKR	Active	Production	SC70 (DCK) | 3	3000 | LARGE T&R	Yes	NIPDAU	Level-2-260C-1 YEAR	-40 to 125	3FA
TLV803EA22DCKR.A	Active	Production	SC70 (DCK) | 3	3000 | LARGE T&R	Yes	NIPDAU	Level-2-260C-1 YEAR	-40 to 125	3FA
TLV803EA24DCKR	Active	Production	SC70 (DCK) | 3	3000 | LARGE T&R	Yes	NIPDAU	Level-2-260C-1 YEAR	-40 to 125	34A
TLV803EA24DCKR.A	Active	Production	SC70 (DCK) | 3	3000 | LARGE T&R	Yes	NIPDAU	Level-2-260C-1 YEAR	-40 to 125	34A
TLV803EA26DBZR	Active	Production	SOT-23 (DBZ) | 3	3000 | LARGE T&R	Yes	NIPDAU | SN	Level-1-260C-UNLIM	-40 to 125	326A
TLV803EA26DBZR.A	Active	Production	SOT-23 (DBZ) | 3	3000 | LARGE T&R	Yes	NIPDAU	Level-1-260C-UNLIM	-40 to 125	326A
TLV803EA26DBZRG4	Active	Production	SOT-23 (DBZ) | 3	3000 | LARGE T&R	Yes	NIPDAU	Level-1-260C-UNLIM	-40 to 125	326A
TLV803EA26DBZRG4.A	Active	Production	SOT-23 (DBZ) | 3	3000 | LARGE T&R	Yes	NIPDAU	Level-1-260C-UNLIM	-40 to 125	326A
TLV803EA26DCKR	Active	Production	SC70 (DCK) | 3	3000 | LARGE T&R	Yes	NIPDAU	Level-2-260C-1 YEAR	-40 to 125	32A
TLV803EA26DCKR.A	Active	Production	SC70 (DCK) | 3	3000 | LARGE T&R	Yes	NIPDAU	Level-2-260C-1 YEAR	-40 to 125	32A
TLV803EA26DPWR	Active	Production	X2SON (DPW) | 5	3000 | LARGE T&R	Yes	NIPDAU | NIPDAU	Level-2-260C-1 YEAR	-40 to 125	(I, IW)
TLV803EA26DPWR.A	Active	Production	X2SON (DPW) | 5	3000 | LARGE T&R	Yes	NIPDAU	Level-2-260C-1 YEAR	-40 to 125	(I, IW)
TLV803EA26RDBZR	Active	Production	SOT-23 (DBZ) | 3	3000 | LARGE T&R	Yes	NIPDAU | SN	Level-1-260C-UNLIM	-40 to 125	36AR
TLV803EA26RDBZR.A	Active	Production	SOT-23 (DBZ) | 3	3000 | LARGE T&R	Yes	NIPDAU	Level-1-260C-UNLIM	-40 to 125	36AR
TLV803EA29DBZR	Active	Production	SOT-23 (DBZ) | 3	3000 | LARGE T&R	Yes	NIPDAU | SN	Level-1-260C-UNLIM	-40 to 125	329A
TLV803EA29DBZR.A	Active	Production	SOT-23 (DBZ) | 3	3000 | LARGE T&R	Yes	NIPDAU	Level-1-260C-UNLIM	-40 to 125	329A
TLV803EA29DCKR	Active	Production	SC70 (DCK) | 3	3000 | LARGE T&R	Yes	NIPDAU	Level-1-260C-UNLIM	-40 to 125	39A
TLV803EA29DCKR.A	Active	Production	SC70 (DCK) | 3	3000 | LARGE T&R	Yes	NIPDAU	Level-1-260C-UNLIM	-40 to 125	39A
TLV803EA29DPWR	Active	Production	X2SON (DPW) | 5	3000 | LARGE T&R	Yes	NIPDAU | NIPDAU	Level-2-260C-1 YEAR	-40 to 125	(I, IX)
TLV803EA29DPWR.A	Active	Production	X2SON (DPW) | 5	3000 | LARGE T&R	Yes	NIPDAU	Level-2-260C-1 YEAR	-40 to 125	(I, IX)
TLV803EA29RDBZR	Active	Production	SOT-23 (DBZ) | 3	3000 | LARGE T&R	Yes	NIPDAU | SN	Level-1-260C-UNLIM	-40 to 125	39AR
TLV803EA29RDBZR.A	Active	Production	SOT-23 (DBZ) | 3	3000 | LARGE T&R	Yes	NIPDAU	Level-1-260C-UNLIM	-40 to 125	39AR
TLV803EA29VDBZR	Active	Production	SOT-23 (DBZ) | 3	3000 | LARGE T&R	Yes	NIPDAU | SN	Level-1-260C-UNLIM	-40 to 125	39AV

Orderable part number	Status (1)	Material type (2)	Package | Pins	Package qty | Carrier	RoHS (3)	Lead finish/ Ball material (4)	MSL rating/ Peak reflow (5)	Op temp (°C)	Part marking (6)
TLV803EA29VDBZR.A	Active	Production	SOT-23 (DBZ) | 3	3000 | LARGE T&R	Yes	NIPDAU	Level-1-260C-UNLIM	-40 to 125	39AV
TLV803EA30DBZR	Active	Production	SOT-23 (DBZ) | 3	3000 | LARGE T&R	Yes	NIPDAU | SN	Level-1-260C-UNLIM	-40 to 125	330A
TLV803EA30DBZR.A	Active	Production	SOT-23 (DBZ) | 3	3000 | LARGE T&R	Yes	NIPDAU	Level-1-260C-UNLIM	-40 to 125	330A
TLV803EA30DCKR	Active	Production	SC70 (DCK) | 3	3000 | LARGE T&R	Yes	NIPDAU	Level-2-260C-1 YEAR	-40 to 125	30A
TLV803EA30DCKR.A	Active	Production	SC70 (DCK) | 3	3000 | LARGE T&R	Yes	NIPDAU	Level-2-260C-1 YEAR	-40 to 125	30A
TLV803EA30DCKRG4	Active	Production	SC70 (DCK) | 3	3000 | LARGE T&R	Yes	NIPDAU	Level-2-260C-1 YEAR	-40 to 125	30A
TLV803EA30DCKRG4.A	Active	Production	SC70 (DCK) | 3	3000 | LARGE T&R	Yes	NIPDAU	Level-2-260C-1 YEAR	-40 to 125	30A
TLV803EA42RDBZR	Active	Production	SOT-23 (DBZ) | 3	3000 | LARGE T&R	Yes	NIPDAU | SN	Level-1-260C-UNLIM	-40 to 125	3DAR
TLV803EA42RDBZR.A	Active	Production	SOT-23 (DBZ) | 3	3000 | LARGE T&R	Yes	NIPDAU	Level-1-260C-UNLIM	-40 to 125	3DAR
TLV803EA43DBZR	Active	Production	SOT-23 (DBZ) | 3	3000 | LARGE T&R	Yes	NIPDAU | SN	Level-1-260C-UNLIM	-40 to 125	343A
TLV803EA43DBZR.A	Active	Production	SOT-23 (DBZ) | 3	3000 | LARGE T&R	Yes	NIPDAU	Level-1-260C-UNLIM	-40 to 125	343A
TLV803EA43DCKR	Active	Production	SC70 (DCK) | 3	3000 | LARGE T&R	Yes	NIPDAU	Level-2-260C-1 YEAR	-40 to 125	33A
TLV803EA43DCKR.A	Active	Production	SC70 (DCK) | 3	3000 | LARGE T&R	Yes	NIPDAU	Level-2-260C-1 YEAR	-40 to 125	33A
TLV803EA43RDBZR	Active	Production	SOT-23 (DBZ) | 3	3000 | LARGE T&R	Yes	SN	Level-1-260C-UNLIM	-40 to 125	34AR
TLV803EA43RDBZR.A	Active	Production	SOT-23 (DBZ) | 3	3000 | LARGE T&R	Yes	SN	Level-1-260C-UNLIM	-40 to 125	34AR
TLV803EA43VDBZR	Active	Production	SOT-23 (DBZ) | 3	3000 | LARGE T&R	Yes	NIPDAU | SN	Level-1-260C-UNLIM	-40 to 125	34AV
TLV803EA43VDBZR.A	Active	Production	SOT-23 (DBZ) | 3	3000 | LARGE T&R	Yes	NIPDAU	Level-1-260C-UNLIM	-40 to 125	34AV
TLV803EB22DCKR	Active	Production	SC70 (DCK) | 3	3000 | LARGE T&R	Yes	NIPDAU	Level-2-260C-1 YEAR	-40 to 125	32B
TLV803EB22DCKR.A	Active	Production	SC70 (DCK) | 3	3000 | LARGE T&R	Yes	NIPDAU	Level-2-260C-1 YEAR	-40 to 125	32B
TLV803EB26RDBZR	Active	Production	SOT-23 (DBZ) | 3	3000 | LARGE T&R	Yes	NIPDAU | SN	Level-1-260C-UNLIM	-40 to 125	36BR
TLV803EB26RDBZR.A	Active	Production	SOT-23 (DBZ) | 3	3000 | LARGE T&R	Yes	NIPDAU	Level-1-260C-UNLIM	-40 to 125	36BR
TLV803EB29DBZR	Active	Production	SOT-23 (DBZ) | 3	3000 | LARGE T&R	Yes	NIPDAU | SN	Level-1-260C-UNLIM	-40 to 125	329B
TLV803EB29DBZR.A	Active	Production	SOT-23 (DBZ) | 3	3000 | LARGE T&R	Yes	NIPDAU	Level-1-260C-UNLIM	-40 to 125	329B
TLV803EB29RDBZR	Active	Production	SOT-23 (DBZ) | 3	3000 | LARGE T&R	Yes	NIPDAU | SN	Level-1-260C-UNLIM	-40 to 125	39BR
TLV803EB29RDBZR.A	Active	Production	SOT-23 (DBZ) | 3	3000 | LARGE T&R	Yes	NIPDAU	Level-1-260C-UNLIM	-40 to 125	39BR
TLV803EB33VDBZR	Active	Production	SOT-23 (DBZ) | 3	3000 | LARGE T&R	Yes	NIPDAU | SN	Level-1-260C-UNLIM	-40 to 125	3CBV
TLV803EB33VDBZR.A	Active	Production	SOT-23 (DBZ) | 3	3000 | LARGE T&R	Yes	NIPDAU	Level-1-260C-UNLIM	-40 to 125	3CBV
TLV803EB42VDBZR	Active	Production	SOT-23 (DBZ) | 3	3000 | LARGE T&R	Yes	NIPDAU | SN	Level-1-260C-UNLIM	-40 to 125	3DBV
TLV803EB42VDBZR.A	Active	Production	SOT-23 (DBZ) | 3	3000 | LARGE T&R	Yes	NIPDAU	Level-1-260C-UNLIM	-40 to 125	3DBV
TLV803EB46DCKR	Active	Production	SC70 (DCK) | 3	3000 | LARGE T&R	Yes	NIPDAU	Level-2-260C-1 YEAR	-40 to 125	36B
TLV803EB46DCKR.A	Active	Production	SC70 (DCK) | 3	3000 | LARGE T&R	Yes	NIPDAU	Level-2-260C-1 YEAR	-40 to 125	36B

Orderable part number	Status (1)	Material type (2)	Package | Pins	Package qty | Carrier	RoHS (3)	Lead finish/ Ball material (4)	MSL rating/ Peak reflow (5)	Op temp (°C)	Part marking (6)
TLV803EC29DBZR	Active	Production	SOT-23 (DBZ) | 3	3000 | LARGE T&R	Yes	NIPDAU | SN	Level-1-260C-UNLIM	-40 to 125	329C
TLV803EC29DBZR.A	Active	Production	SOT-23 (DBZ) | 3	3000 | LARGE T&R	Yes	NIPDAU	Level-1-260C-UNLIM	-40 to 125	329C
TLV803EC29DCKR	Active	Production	SC70 (DCK) | 3	3000 | LARGE T&R	Yes	NIPDAU	Level-2-260C-1 YEAR	-40 to 125	39C
TLV803EC29DCKR.A	Active	Production	SC70 (DCK) | 3	3000 | LARGE T&R	Yes	NIPDAU	Level-2-260C-1 YEAR	-40 to 125	39C
TLV803EC30DBZR	Active	Production	SOT-23 (DBZ) | 3	3000 | LARGE T&R	Yes	SN	Level-1-260C-UNLIM	-40 to 125	330C
TLV803EC30DBZR.A	Active	Production	SOT-23 (DBZ) | 3	3000 | LARGE T&R	Yes	SN	Level-1-260C-UNLIM	-40 to 125	330C
TLV803EC43DBZR	Active	Production	SOT-23 (DBZ) | 3	3000 | LARGE T&R	Yes	NIPDAU | SN	Level-1-260C-UNLIM	-40 to 125	343C
TLV803EC43DBZR.A	Active	Production	SOT-23 (DBZ) | 3	3000 | LARGE T&R	Yes	NIPDAU	Level-1-260C-UNLIM	-40 to 125	343C
TLV803ED17DPWR	Active	Production	X2SON (DPW) | 5	3000 | LARGE T&R	Yes	NIPDAU	Level-2-260C-1 YEAR	-40 to 125	IS
TLV803ED17DPWR.A	Active	Production	X2SON (DPW) | 5	3000 | LARGE T&R	Yes	NIPDAU	Level-2-260C-1 YEAR	-40 to 125	IS
TLV803ED18DPWR	Active	Production	X2SON (DPW) | 5	3000 | LARGE T&R	Yes	NIPDAU	Level-2-260C-1 YEAR	-40 to 125	IU
TLV803ED18DPWR.A	Active	Production	X2SON (DPW) | 5	3000 | LARGE T&R	Yes	NIPDAU	Level-2-260C-1 YEAR	-40 to 125	IU
TLV803ED29DBZR	Active	Production	SOT-23 (DBZ) | 3	3000 | LARGE T&R	Yes	NIPDAU | SN	Level-1-260C-UNLIM	-40 to 125	329D
TLV803ED29DBZR.A	Active	Production	SOT-23 (DBZ) | 3	3000 | LARGE T&R	Yes	NIPDAU	Level-1-260C-UNLIM	-40 to 125	329D
TLV803EF26DBZR	Active	Production	SOT-23 (DBZ) | 3	3000 | LARGE T&R	Yes	NIPDAU | SN	Level-1-260C-UNLIM	-40 to 125	326F
TLV803EF26DBZR.A	Active	Production	SOT-23 (DBZ) | 3	3000 | LARGE T&R	Yes	NIPDAU	Level-1-260C-UNLIM	-40 to 125	326F
TLV803EF29DBZR	Active	Production	SOT-23 (DBZ) | 3	3000 | LARGE T&R	Yes	NIPDAU | SN	Level-1-260C-UNLIM	-40 to 125	329F
TLV803EF29DBZR.A	Active	Production	SOT-23 (DBZ) | 3	3000 | LARGE T&R	Yes	NIPDAU	Level-1-260C-UNLIM	-40 to 125	329F
TLV809EA17DBZR	Active	Production	SOT-23 (DBZ) | 3	3000 | LARGE T&R	Yes	NIPDAU | SN	Level-1-260C-UNLIM	-40 to 125	917A
TLV809EA17DBZR.A	Active	Production	SOT-23 (DBZ) | 3	3000 | LARGE T&R	Yes	NIPDAU	Level-1-260C-UNLIM	-40 to 125	917A
TLV809EA22DBZR	Active	Production	SOT-23 (DBZ) | 3	3000 | LARGE T&R	Yes	NIPDAU | SN	Level-1-260C-UNLIM	-40 to 125	(322A, 922A)
TLV809EA22DBZR.A	Active	Production	SOT-23 (DBZ) | 3	3000 | LARGE T&R	Yes	NIPDAU	Level-1-260C-UNLIM	-40 to 125	(322A, 922A)
TLV809EA26DBZR	Active	Production	SOT-23 (DBZ) | 3	3000 | LARGE T&R	Yes	NIPDAU | SN	Level-1-260C-UNLIM	-40 to 125	926A
TLV809EA26DBZR.A	Active	Production	SOT-23 (DBZ) | 3	3000 | LARGE T&R	Yes	NIPDAU	Level-1-260C-UNLIM	-40 to 125	926A
TLV809EA26DCKR	Active	Production	SC70 (DCK) | 3	3000 | LARGE T&R	Yes	NIPDAU	Level-2-260C-1 YEAR	-40 to 125	92A
TLV809EA26DCKR.A	Active	Production	SC70 (DCK) | 3	3000 | LARGE T&R	Yes	NIPDAU	Level-2-260C-1 YEAR	-40 to 125	92A
TLV809EA26DPWR	Active	Production	X2SON (DPW) | 5	3000 | LARGE T&R	Yes	NIPDAU | NIPDAU	Level-2-260C-1 YEAR	-40 to 125	(I, IZ)
TLV809EA26DPWR.A	Active	Production	X2SON (DPW) | 5	3000 | LARGE T&R	Yes	NIPDAU	Level-2-260C-1 YEAR	-40 to 125	(I, IZ)
TLV809EA29DBZR	Active	Production	SOT-23 (DBZ) | 3	3000 | LARGE T&R	Yes	NIPDAU | SN	Level-1-260C-UNLIM	-40 to 125	929A
TLV809EA29DBZR.A	Active	Production	SOT-23 (DBZ) | 3	3000 | LARGE T&R	Yes	NIPDAU	Level-1-260C-UNLIM	-40 to 125	929A
TLV809EA29DBZRG4	Active	Production	SOT-23 (DBZ) | 3	3000 | LARGE T&R	Yes	NIPDAU	Level-1-260C-UNLIM	-40 to 125	929A

Orderable part number	Status (1)	Material type (2)	Package | Pins	Package qty | Carrier	RoHS (3)	Lead finish/ Ball material (4)	MSL rating/ Peak reflow (5)	Op temp (°C)	Part marking (6)
TLV809EA29DBZRG4.A	Active	Production	SOT-23 (DBZ) | 3	3000 | LARGE T&R	Yes	NIPDAU	Level-1-260C-UNLIM	-40 to 125	929A
TLV809EA29DCKR	Active	Production	SC70 (DCK) | 3	3000 | LARGE T&R	Yes	NIPDAU	Level-2-260C-1 YEAR	-40 to 125	99A
TLV809EA29DCKR.A	Active	Production	SC70 (DCK) | 3	3000 | LARGE T&R	Yes	NIPDAU	Level-2-260C-1 YEAR	-40 to 125	99A
TLV809EA29DPWR	Active	Production	X2SON (DPW) | 5	3000 | LARGE T&R	Yes	NIPDAU | NIPDAU	Level-2-260C-1 YEAR	-40 to 125	(J, J1)
TLV809EA29DPWR.A	Active	Production	X2SON (DPW) | 5	3000 | LARGE T&R	Yes	NIPDAU	Level-2-260C-1 YEAR	-40 to 125	(J, J1)
TLV809EA30DBZR	Active	Production	SOT-23 (DBZ) | 3	3000 | LARGE T&R	Yes	NIPDAU | SN	Level-1-260C-UNLIM	-40 to 125	930A
TLV809EA30DBZR.A	Active	Production	SOT-23 (DBZ) | 3	3000 | LARGE T&R	Yes	NIPDAU	Level-1-260C-UNLIM	-40 to 125	930A
TLV809EA30DCKR	Active	Production	SC70 (DCK) | 3	3000 | LARGE T&R	Yes	NIPDAU	Level-2-260C-1 YEAR	-40 to 125	90A
TLV809EA30DCKR.A	Active	Production	SC70 (DCK) | 3	3000 | LARGE T&R	Yes	NIPDAU	Level-2-260C-1 YEAR	-40 to 125	90A
TLV809EA43DBZR	Active	Production	SOT-23 (DBZ) | 3	3000 | LARGE T&R	Yes	SN	Level-1-260C-UNLIM	-40 to 125	943A
TLV809EA43DBZR.A	Active	Production	SOT-23 (DBZ) | 3	3000 | LARGE T&R	Yes	SN	Level-1-260C-UNLIM	-40 to 125	943A
TLV809EA45DBZR	Active	Production	SOT-23 (DBZ) | 3	3000 | LARGE T&R	Yes	SN	Level-1-260C-UNLIM	-40 to 125	945A
TLV809EA45DBZR.A	Active	Production	SOT-23 (DBZ) | 3	3000 | LARGE T&R	Yes	SN	Level-1-260C-UNLIM	-40 to 125	945A
TLV809EA45DCKR	Active	Production	SC70 (DCK) | 3	3000 | LARGE T&R	Yes	NIPDAU	Level-2-260C-1 YEAR	-40 to 125	95A
TLV809EA45DCKR.A	Active	Production	SC70 (DCK) | 3	3000 | LARGE T&R	Yes	NIPDAU	Level-2-260C-1 YEAR	-40 to 125	95A
TLV809EA46DBZR	Active	Production	SOT-23 (DBZ) | 3	3000 | LARGE T&R	Yes	SN	Level-1-260C-UNLIM	-40 to 125	946A
TLV809EA46DBZR.A	Active	Production	SOT-23 (DBZ) | 3	3000 | LARGE T&R	Yes	SN	Level-1-260C-UNLIM	-40 to 125	946A
TLV809EA46DCKR	Active	Production	SC70 (DCK) | 3	3000 | LARGE T&R	Yes	NIPDAU	Level-2-260C-1 YEAR	-40 to 125	96A
TLV809EA46DCKR.A	Active	Production	SC70 (DCK) | 3	3000 | LARGE T&R	Yes	NIPDAU	Level-2-260C-1 YEAR	-40 to 125	96A
TLV809EA46DPWR	Active	Production	X2SON (DPW) | 5	3000 | LARGE T&R	Yes	NIPDAU | NIPDAU	Level-2-260C-1 YEAR	-40 to 125	(J, J2)
TLV809EA46DPWR.A	Active	Production	X2SON (DPW) | 5	3000 | LARGE T&R	Yes	NIPDAU	Level-2-260C-1 YEAR	-40 to 125	(J, J2)
TLV809EC26DBZR	Active	Production	SOT-23 (DBZ) | 3	3000 | LARGE T&R	Yes	NIPDAU | SN	Level-1-260C-UNLIM	-40 to 125	926C
TLV809EC26DBZR.A	Active	Production	SOT-23 (DBZ) | 3	3000 | LARGE T&R	Yes	NIPDAU	Level-1-260C-UNLIM	-40 to 125	926C
TLV809EC46DBZR	Active	Production	SOT-23 (DBZ) | 3	3000 | LARGE T&R	Yes	NIPDAU | SN	Level-1-260C-UNLIM	-40 to 125	946C
TLV809EC46DBZR.A	Active	Production	SOT-23 (DBZ) | 3	3000 | LARGE T&R	Yes	NIPDAU	Level-1-260C-UNLIM	-40 to 125	946C
TLV809ED29DBZR	Active	Production	SOT-23 (DBZ) | 3	3000 | LARGE T&R	Yes	NIPDAU | SN	Level-1-260C-UNLIM	-40 to 125	929D
TLV809ED29DBZR.A	Active	Production	SOT-23 (DBZ) | 3	3000 | LARGE T&R	Yes	NIPDAU	Level-1-260C-UNLIM	-40 to 125	929D
TLV809EF30DBZR	Active	Production	SOT-23 (DBZ) | 3	3000 | LARGE T&R	Yes	NIPDAU | SN	Level-1-260C-UNLIM	-40 to 125	930F
TLV809EF30DBZR.A	Active	Production	SOT-23 (DBZ) | 3	3000 | LARGE T&R	Yes	NIPDAU	Level-1-260C-UNLIM	-40 to 125	930F
TLV810EA29DBZR	Active	Production	SOT-23 (DBZ) | 3	3000 | LARGE T&R	Yes	NIPDAU | SN	Level-1-260C-UNLIM	-40 to 125	029A
TLV810EA29DBZR.A	Active	Production	SOT-23 (DBZ) | 3	3000 | LARGE T&R	Yes	NIPDAU	Level-1-260C-UNLIM	-40 to 125	029A

Orderable part number	Status (1)	Material type (2)	Package | Pins	Package qty | Carrier	RoHS (3)	Lead finish/ Ball material (4)	MSL rating/ Peak reflow (5)	Op temp (°C)	Part marking (6)
TLV810EA29DPWR	Active	Production	X2SON (DPW) | 5	3000 | LARGE T&R	Yes	NIPDAU	Level-2-260C-1 YEAR	-40 to 125	(J, J3)
TLV810EA29DPWR.A	Active	Production	X2SON (DPW) | 5	3000 | LARGE T&R	Yes	NIPDAU	Level-2-260C-1 YEAR	-40 to 125	(J, J3)

(1) **Status:** For more details on status, see our product life cycle.

(2) **Material type:** When designated, preproduction parts are prototypes/experimental devices, and are not yet approved or released for full production. Testing and final process, including without limitation quality assurance, reliability performance testing, and/or process qualification, may not yet be complete, and this item is subject to further changes or possible discontinuation. If available for ordering, purchases will be subject to an additional waiver at checkout, and are intended for early internal evaluation purposes only. These items are sold without warranties of any kind.

(3) **RoHS values:** Yes, No, RoHS Exempt. See the TI RoHS Statement for additional information and value definition.

(4) **Lead finish/Ball material:** Parts may have multiple material finish options. Finish options are separated by a vertical ruled line. Lead finish/Ball material values may wrap to two lines if the finish value exceeds the maximum column width.

(5) **MSL rating/Peak reflow:** The moisture sensitivity level ratings and peak solder (reflow) temperatures. In the event that a part has multiple moisture sensitivity ratings, only the lowest level per JEDEC standards is shown. Refer to the shipping label for the actual reflow temperature that will be used to mount the part to the printed circuit board.

(6) **Part marking:** There may be an additional marking, which relates to the logo, the lot trace code information, or the environmental category of the part.

Multiple part markings will be inside parentheses. Only one part marking contained in parentheses and separated by a "~" will appear on a part. If a line is indented then it is a continuation of the previous line and the two combined represent the entire part marking for that device.

Important Information and Disclaimer: The information provided on this page represents TI's knowledge and belief as of the date that it is provided. TI bases its knowledge and belief on information provided by third parties, and makes no representation or warranty as to the accuracy of such information. Efforts are underway to better integrate information from third parties. TI has taken and continues to take reasonable steps to provide representative and accurate information but may not have conducted destructive testing or chemical analysis on incoming materials and chemicals. TI and TI suppliers consider certain information to be proprietary, and thus CAS numbers and other limited information may not be available for release.

In no event shall TI's liability arising out of such information exceed the total purchase price of the TI part(s) at issue in this document sold by TI to Customer on an annual basis.

TAPE AND REEL INFORMATION

REEL DIMENSIONS

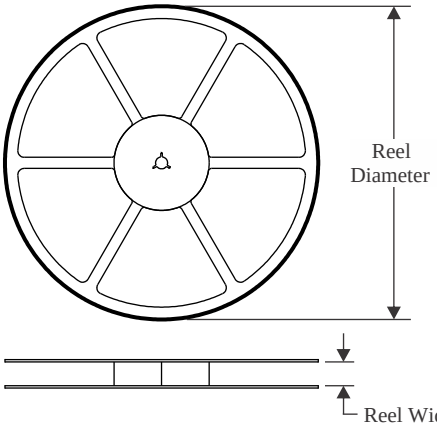

TAPE DIMENSIONS

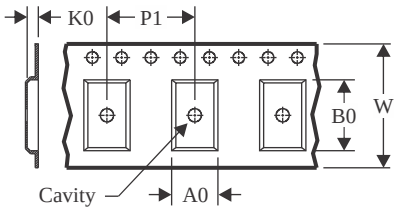

A0	Dimension designed to accommodate the component width
B0	Dimension designed to accommodate the component length
K0	Dimension designed to accommodate the component thickness
W	Overall width of the carrier tape
P1	Pitch between successive cavity centers

QUADRANT ASSIGNMENTS FOR PIN 1 ORIENTATION IN TAPE

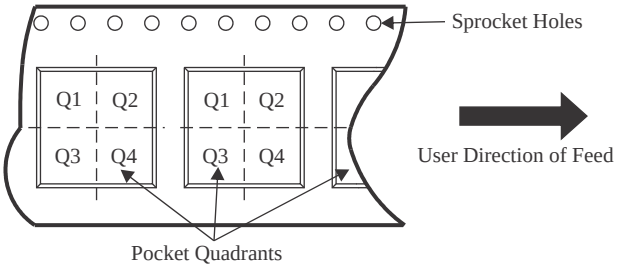

*All dimensions are nominal

Device	Package Type	Package Drawing	Pins	SPQ	Reel Diameter (mm)	Reel Width W1 (mm)	A0 (mm)	B0 (mm)	K0 (mm)	P1 (mm)	W (mm)	Pin1 Quadrant
TLV803EA17DPWR	X2SON	DPW	5	3000	178.0	8.4	0.91	0.91	0.5	2.0	8.0	Q2
TLV803EA18DPWR	X2SON	DPW	5	3000	178.0	8.4	0.91	0.91	0.5	2.0	8.0	Q2
TLV803EA22DBZR	SOT-23	DBZ	3	3000	180.0	8.4	2.9	3.35	1.35	4.0	8.0	Q3
TLV803EA22DCKR	SC70	DCK	3	3000	178.0	9.0	2.4	2.5	1.2	4.0	8.0	Q3
TLV803EA24DCKR	SC70	DCK	3	3000	178.0	9.0	2.4	2.5	1.2	4.0	8.0	Q3
TLV803EA26DBZR	SOT-23	DBZ	3	3000	180.0	8.4	2.9	3.35	1.35	4.0	8.0	Q3
TLV803EA26DBZRG4	SOT-23	DBZ	3	3000	180.0	8.4	2.9	3.35	1.35	4.0	8.0	Q3
TLV803EA26DCKR	SC70	DCK	3	3000	178.0	9.0	2.4	2.5	1.2	4.0	8.0	Q3
TLV803EA26DPWR	X2SON	DPW	5	3000	178.0	8.4	0.91	0.91	0.5	2.0	8.0	Q2
TLV803EA26RDBZR	SOT-23	DBZ	3	3000	180.0	8.4	2.9	3.35	1.35	4.0	8.0	Q3
TLV803EA29DBZR	SOT-23	DBZ	3	3000	180.0	8.4	2.9	3.35	1.35	4.0	8.0	Q3
TLV803EA29DCKR	SC70	DCK	3	3000	178.0	9.0	2.4	2.5	1.2	4.0	8.0	Q3
TLV803EA29DPWR	X2SON	DPW	5	3000	178.0	8.4	0.91	0.91	0.5	2.0	8.0	Q2
TLV803EA29RDBZR	SOT-23	DBZ	3	3000	180.0	8.4	2.9	3.35	1.35	4.0	8.0	Q3
TLV803EA29VDBZR	SOT-23	DBZ	3	3000	178.0	9.0	3.15	2.77	1.22	4.0	8.0	Q3
TLV803EA30DBZR	SOT-23	DBZ	3	3000	180.0	8.4	3.2	2.85	1.3	4.0	8.0	Q3

Device	Package Type	Package Drawing	Pins	SPQ	Reel Diameter (mm)	Reel Width W1 (mm)	A0 (mm)	B0 (mm)	K0 (mm)	P1 (mm)	W (mm)	Pin1 Quadrant
TLV803EA30DBZR	SOT-23	DBZ	3	3000	180.0	8.4	2.9	3.35	1.35	4.0	8.0	Q3
TLV803EA30DCKR	SC70	DCK	3	3000	178.0	9.0	2.4	2.5	1.2	4.0	8.0	Q3
TLV803EA30DCKRG4	SC70	DCK	3	3000	178.0	9.0	2.4	2.5	1.2	4.0	8.0	Q3
TLV803EA42RDBZR	SOT-23	DBZ	3	3000	180.0	8.4	2.9	3.35	1.35	4.0	8.0	Q3
TLV803EA43DBZR	SOT-23	DBZ	3	3000	180.0	8.4	2.9	3.35	1.35	4.0	8.0	Q3
TLV803EA43DCKR	SC70	DCK	3	3000	178.0	9.0	2.4	2.5	1.2	4.0	8.0	Q3
TLV803EA43RDBZR	SOT-23	DBZ	3	3000	180.0	8.4	3.2	2.85	1.3	4.0	8.0	Q3
TLV803EA43VDBZR	SOT-23	DBZ	3	3000	180.0	8.4	2.9	3.35	1.35	4.0	8.0	Q3
TLV803EB22DCKR	SC70	DCK	3	3000	178.0	9.0	2.4	2.5	1.2	4.0	8.0	Q3
TLV803EB26RDBZR	SOT-23	DBZ	3	3000	180.0	8.4	2.9	3.35	1.35	4.0	8.0	Q3
TLV803EB29DBZR	SOT-23	DBZ	3	3000	180.0	8.4	2.9	3.35	1.35	4.0	8.0	Q3
TLV803EB29RDBZR	SOT-23	DBZ	3	3000	178.0	9.0	3.15	2.77	1.22	4.0	8.0	Q3
TLV803EB33VDBZR	SOT-23	DBZ	3	3000	180.0	8.4	2.9	3.35	1.35	4.0	8.0	Q3
TLV803EB42VDBZR	SOT-23	DBZ	3	3000	180.0	8.4	2.9	3.35	1.35	4.0	8.0	Q3
TLV803EB42VDBZR	SOT-23	DBZ	3	3000	180.0	8.4	3.2	2.85	1.3	4.0	8.0	Q3
TLV803EB46DCKR	SC70	DCK	3	3000	178.0	9.0	2.4	2.5	1.2	4.0	8.0	Q3
TLV803EC29DBZR	SOT-23	DBZ	3	3000	180.0	8.4	2.9	3.35	1.35	4.0	8.0	Q3
TLV803EC29DCKR	SC70	DCK	3	3000	178.0	9.0	2.4	2.5	1.2	4.0	8.0	Q3
TLV803EC30DBZR	SOT-23	DBZ	3	3000	180.0	8.4	3.2	2.85	1.3	4.0	8.0	Q3
TLV803EC43DBZR	SOT-23	DBZ	3	3000	180.0	8.4	2.9	3.35	1.35	4.0	8.0	Q3
TLV803ED17DPWR	X2SON	DPW	5	3000	178.0	8.4	0.91	0.91	0.5	2.0	8.0	Q2
TLV803ED18DPWR	X2SON	DPW	5	3000	178.0	8.4	0.91	0.91	0.5	2.0	8.0	Q2
TLV803ED29DBZR	SOT-23	DBZ	3	3000	180.0	8.4	2.9	3.35	1.35	4.0	8.0	Q3
TLV803EF26DBZR	SOT-23	DBZ	3	3000	180.0	8.4	2.9	3.35	1.35	4.0	8.0	Q3
TLV803EF29DBZR	SOT-23	DBZ	3	3000	180.0	8.4	2.9	3.35	1.35	4.0	8.0	Q3
TLV809EA17DBZR	SOT-23	DBZ	3	3000	180.0	8.4	2.9	3.35	1.35	4.0	8.0	Q3
TLV809EA17DBZR	SOT-23	DBZ	3	3000	180.0	8.4	3.2	2.85	1.3	4.0	8.0	Q3
TLV809EA22DBZR	SOT-23	DBZ	3	3000	180.0	8.4	2.9	3.35	1.35	4.0	8.0	Q3
TLV809EA26DBZR	SOT-23	DBZ	3	3000	180.0	8.4	2.9	3.35	1.35	4.0	8.0	Q3
TLV809EA26DCKR	SC70	DCK	3	3000	178.0	9.0	2.4	2.5	1.2	4.0	8.0	Q3
TLV809EA26DPWR	X2SON	DPW	5	3000	178.0	8.4	0.91	0.91	0.5	2.0	8.0	Q2
TLV809EA29DBZR	SOT-23	DBZ	3	3000	180.0	8.4	2.9	3.35	1.35	4.0	8.0	Q3
TLV809EA29DBZRG4	SOT-23	DBZ	3	3000	180.0	8.4	2.9	3.35	1.35	4.0	8.0	Q3
TLV809EA29DCKR	SC70	DCK	3	3000	178.0	9.0	2.4	2.5	1.2	4.0	8.0	Q3
TLV809EA29DPWR	X2SON	DPW	5	3000	178.0	8.4	0.91	0.91	0.5	2.0	8.0	Q2
TLV809EA30DBZR	SOT-23	DBZ	3	3000	180.0	8.4	2.9	3.35	1.35	4.0	8.0	Q3
TLV809EA30DCKR	SC70	DCK	3	3000	178.0	9.0	2.4	2.5	1.2	4.0	8.0	Q3
TLV809EA43DBZR	SOT-23	DBZ	3	3000	180.0	8.4	3.2	2.85	1.3	4.0	8.0	Q3
TLV809EA45DBZR	SOT-23	DBZ	3	3000	180.0	8.4	3.2	2.85	1.3	4.0	8.0	Q3
TLV809EA45DCKR	SC70	DCK	3	3000	178.0	9.0	2.4	2.5	1.2	4.0	8.0	Q3
TLV809EA46DBZR	SOT-23	DBZ	3	3000	180.0	8.4	3.2	2.85	1.3	4.0	8.0	Q3

Device	Package Type	Package Drawing	Pins	SPQ	Reel Diameter (mm)	Reel Width W1 (mm)	A0 (mm)	B0 (mm)	K0 (mm)	P1 (mm)	W (mm)	Pin1 Quadrant
TLV809EA46DCKR	SC70	DCK	3	3000	178.0	9.0	2.4	2.5	1.2	4.0	8.0	Q3
TLV809EA46DPWR	X2SON	DPW	5	3000	178.0	8.4	0.91	0.91	0.5	2.0	8.0	Q2
TLV809EC26DBZR	SOT-23	DBZ	3	3000	180.0	8.4	2.9	3.35	1.35	4.0	8.0	Q3
TLV809EC46DBZR	SOT-23	DBZ	3	3000	180.0	8.4	2.9	3.35	1.35	4.0	8.0	Q3
TLV809ED29DBZR	SOT-23	DBZ	3	3000	180.0	8.4	2.9	3.35	1.35	4.0	8.0	Q3
TLV809EF30DBZR	SOT-23	DBZ	3	3000	180.0	8.4	2.9	3.35	1.35	4.0	8.0	Q3
TLV810EA29DBZR	SOT-23	DBZ	3	3000	180.0	8.4	2.9	3.35	1.35	4.0	8.0	Q3
TLV810EA29DPWR	X2SON	DPW	5	3000	178.0	8.4	0.91	0.91	0.5	2.0	8.0	Q2

TAPE AND REEL BOX DIMENSIONS

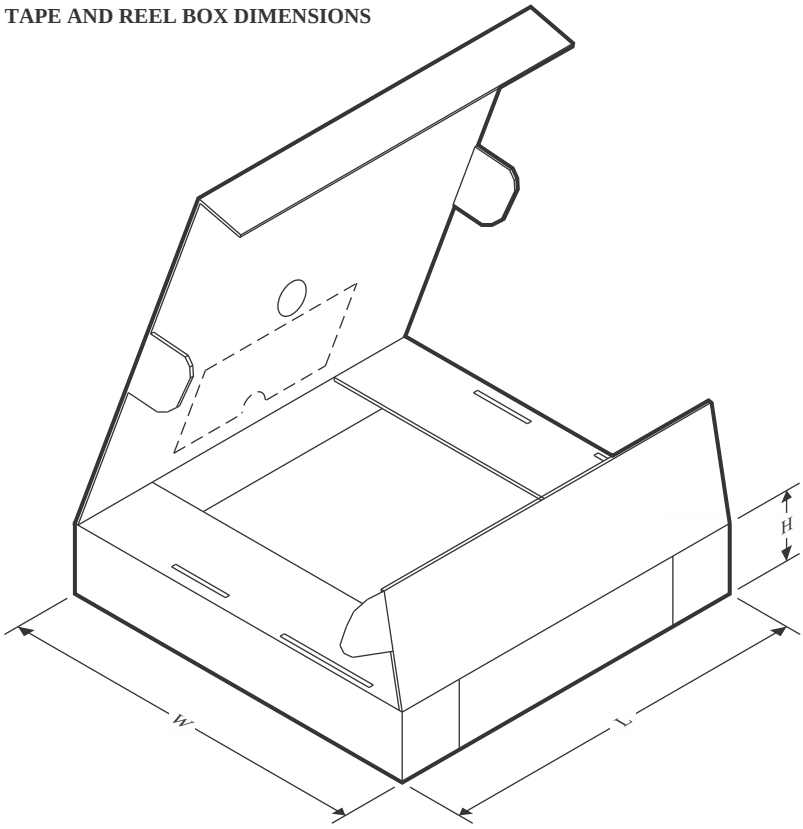

*All dimensions are nominal

Device	Package Type	Package Drawing	Pins	SPQ	Length (mm)	Width (mm)	Height (mm)
TLV803EA17DPWR	X2SON	DPW	5	3000	205.0	200.0	33.0
TLV803EA18DPWR	X2SON	DPW	5	3000	205.0	200.0	33.0
TLV803EA22DBZR	SOT-23	DBZ	3	3000	210.0	185.0	35.0
TLV803EA22DCKR	SC70	DCK	3	3000	180.0	180.0	18.0
TLV803EA24DCKR	SC70	DCK	3	3000	180.0	180.0	18.0
TLV803EA26DBZR	SOT-23	DBZ	3	3000	210.0	185.0	35.0
TLV803EA26DBZRG4	SOT-23	DBZ	3	3000	210.0	185.0	35.0
TLV803EA26DCKR	SC70	DCK	3	3000	180.0	180.0	18.0
TLV803EA26DPWR	X2SON	DPW	5	3000	205.0	200.0	33.0
TLV803EA26RDBZR	SOT-23	DBZ	3	3000	210.0	185.0	35.0
TLV803EA29DBZR	SOT-23	DBZ	3	3000	210.0	185.0	35.0
TLV803EA29DCKR	SC70	DCK	3	3000	180.0	180.0	18.0
TLV803EA29DPWR	X2SON	DPW	5	3000	205.0	200.0	33.0
TLV803EA29RDBZR	SOT-23	DBZ	3	3000	210.0	185.0	35.0
TLV803EA29VDBZR	SOT-23	DBZ	3	3000	180.0	180.0	18.0
TLV803EA30DBZR	SOT-23	DBZ	3	3000	210.0	185.0	35.0
TLV803EA30DBZR	SOT-23	DBZ	3	3000	210.0	185.0	35.0
TLV803EA30DCKR	SC70	DCK	3	3000	180.0	180.0	18.0

Device	Package Type	Package Drawing	Pins	SPQ	Length (mm)	Width (mm)	Height (mm)
TLV803EA30DCKRG4	SC70	DCK	3	3000	180.0	180.0	18.0
TLV803EA42RDBZR	SOT-23	DBZ	3	3000	210.0	185.0	35.0
TLV803EA43DBZR	SOT-23	DBZ	3	3000	210.0	185.0	35.0
TLV803EA43DCKR	SC70	DCK	3	3000	180.0	180.0	18.0
TLV803EA43RDBZR	SOT-23	DBZ	3	3000	210.0	185.0	35.0
TLV803EA43VDBZR	SOT-23	DBZ	3	3000	210.0	185.0	35.0
TLV803EB22DCKR	SC70	DCK	3	3000	180.0	180.0	18.0
TLV803EB26RDBZR	SOT-23	DBZ	3	3000	210.0	185.0	35.0
TLV803EB29DBZR	SOT-23	DBZ	3	3000	210.0	185.0	35.0
TLV803EB29RDBZR	SOT-23	DBZ	3	3000	180.0	180.0	18.0
TLV803EB33VDBZR	SOT-23	DBZ	3	3000	210.0	185.0	35.0
TLV803EB42VDBZR	SOT-23	DBZ	3	3000	210.0	185.0	35.0
TLV803EB42VDBZR	SOT-23	DBZ	3	3000	210.0	185.0	35.0
TLV803EB46DCKR	SC70	DCK	3	3000	180.0	180.0	18.0
TLV803EC29DBZR	SOT-23	DBZ	3	3000	210.0	185.0	35.0
TLV803EC29DCKR	SC70	DCK	3	3000	180.0	180.0	18.0
TLV803EC30DBZR	SOT-23	DBZ	3	3000	210.0	185.0	35.0
TLV803EC43DBZR	SOT-23	DBZ	3	3000	210.0	185.0	35.0
TLV803ED17DPWR	X2SON	DPW	5	3000	205.0	200.0	33.0
TLV803ED18DPWR	X2SON	DPW	5	3000	205.0	200.0	33.0
TLV803ED29DBZR	SOT-23	DBZ	3	3000	210.0	185.0	35.0
TLV803EF26DBZR	SOT-23	DBZ	3	3000	210.0	185.0	35.0
TLV803EF29DBZR	SOT-23	DBZ	3	3000	210.0	185.0	35.0
TLV809EA17DBZR	SOT-23	DBZ	3	3000	210.0	185.0	35.0
TLV809EA17DBZR	SOT-23	DBZ	3	3000	210.0	185.0	35.0
TLV809EA22DBZR	SOT-23	DBZ	3	3000	210.0	185.0	35.0
TLV809EA26DBZR	SOT-23	DBZ	3	3000	210.0	185.0	35.0
TLV809EA26DCKR	SC70	DCK	3	3000	180.0	180.0	18.0
TLV809EA26DPWR	X2SON	DPW	5	3000	205.0	200.0	33.0
TLV809EA29DBZR	SOT-23	DBZ	3	3000	210.0	185.0	35.0
TLV809EA29DBZRG4	SOT-23	DBZ	3	3000	210.0	185.0	35.0
TLV809EA29DCKR	SC70	DCK	3	3000	180.0	180.0	18.0
TLV809EA29DPWR	X2SON	DPW	5	3000	205.0	200.0	33.0
TLV809EA30DBZR	SOT-23	DBZ	3	3000	210.0	185.0	35.0
TLV809EA30DCKR	SC70	DCK	3	3000	180.0	180.0	18.0
TLV809EA43DBZR	SOT-23	DBZ	3	3000	210.0	185.0	35.0
TLV809EA45DBZR	SOT-23	DBZ	3	3000	210.0	185.0	35.0
TLV809EA45DCKR	SC70	DCK	3	3000	180.0	180.0	18.0
TLV809EA46DBZR	SOT-23	DBZ	3	3000	210.0	185.0	35.0
TLV809EA46DCKR	SC70	DCK	3	3000	180.0	180.0	18.0
TLV809EA46DPWR	X2SON	DPW	5	3000	205.0	200.0	33.0
TLV809EC26DBZR	SOT-23	DBZ	3	3000	210.0	185.0	35.0
TLV809EC46DBZR	SOT-23	DBZ	3	3000	210.0	185.0	35.0

Device	Package Type	Package Drawing	Pins	SPQ	Length (mm)	Width (mm)	Height (mm)
TLV809ED29DBZR	SOT-23	DBZ	3	3000	210.0	185.0	35.0
TLV809EF30DBZR	SOT-23	DBZ	3	3000	210.0	185.0	35.0
TLV810EA29DBZR	SOT-23	DBZ	3	3000	210.0	185.0	35.0
TLV810EA29DPWR	X2SON	DPW	5	3000	205.0	200.0	33.0

PACKAGE OUTLINE

DCK0003A

SOT-SC70 - 1.1 max height

SMALL OUTLINE TRANSISTOR SC70

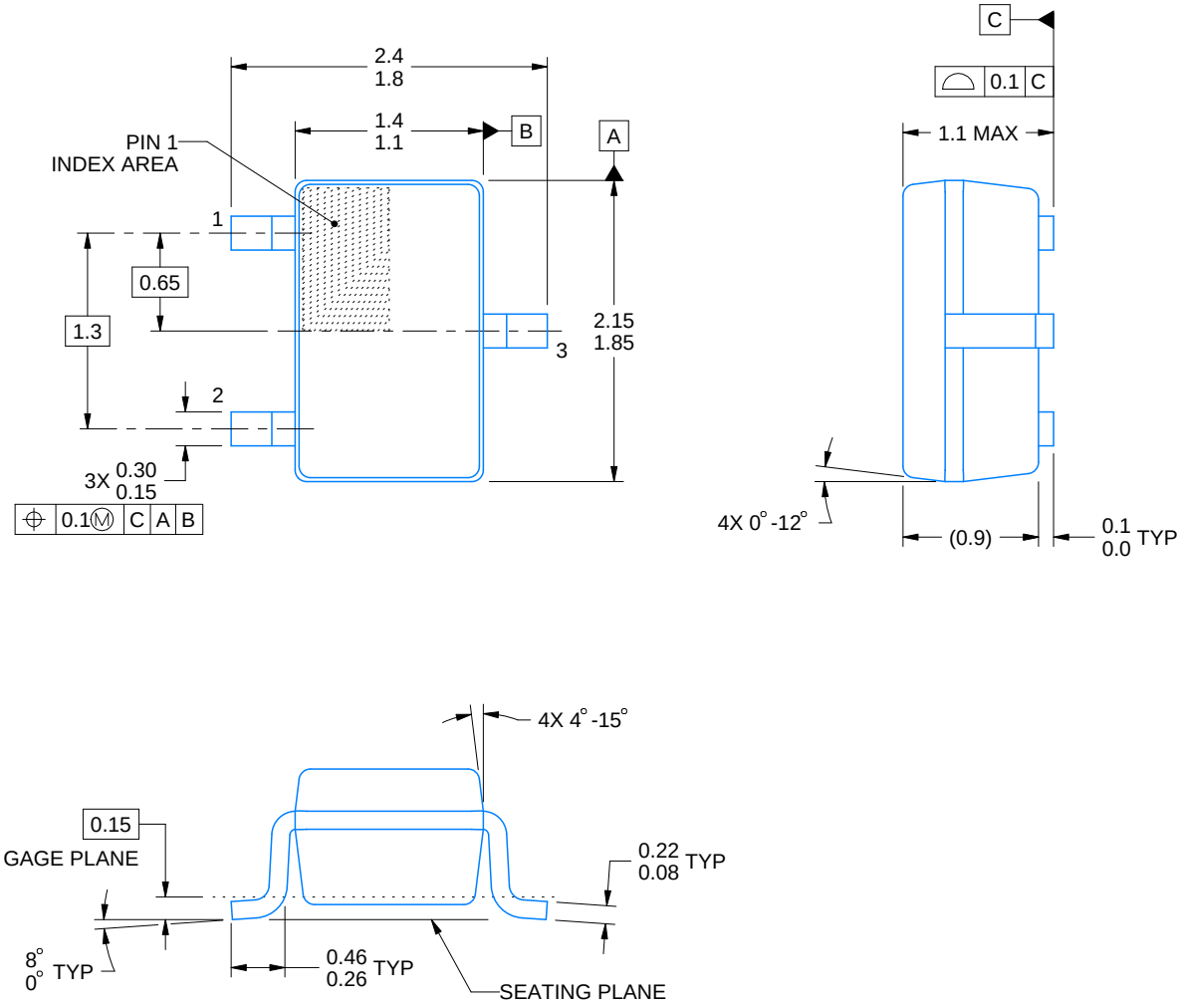

4220745/F 11/2024

NOTES:

1. All linear dimensions are in millimeters. Any dimensions in parenthesis are for reference only. Dimensioning and tolerancing per ASME Y14.5M.
2. This drawing is subject to change without notice.
3. Body dimensions do not include mold flash, protrusions, or gate burrs. Mold flash, protrusions, or gate burrs shall not exceed 0.25mm per side

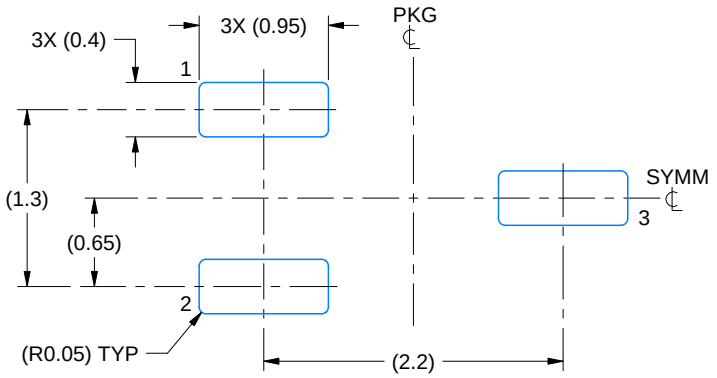

LAND PATTERN EXAMPLE
EXPOSED METAL SHOWN
SCALE:18X

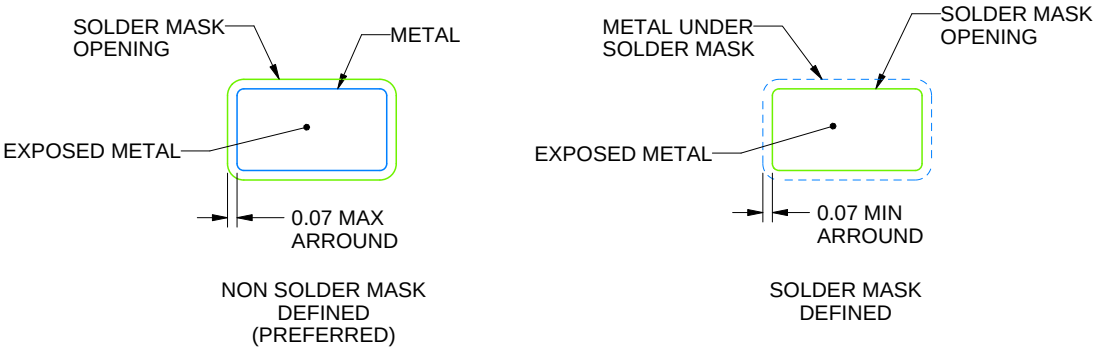

SOLDER MASK DETAILS

4220745/F 11/2024

NOTES: (continued)

4. Publication IPC-7351 may have alternate designs.
5. Solder mask tolerances between and around signal pads can vary based on board fabrication site.

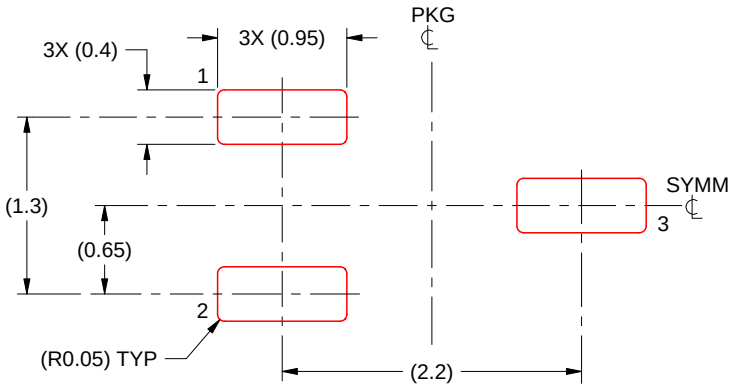

SOLDER PASTE EXAMPLE
BASED ON 0.125 THICK STENCIL
SCALE:18X

4220745/F 11/2024

NOTES: (continued)

6. Laser cutting apertures with trapezoidal walls and rounded corners may offer better paste release. IPC-7525 may have alternate design recommendations.
7. Board assembly site may have different recommendations for stencil design.

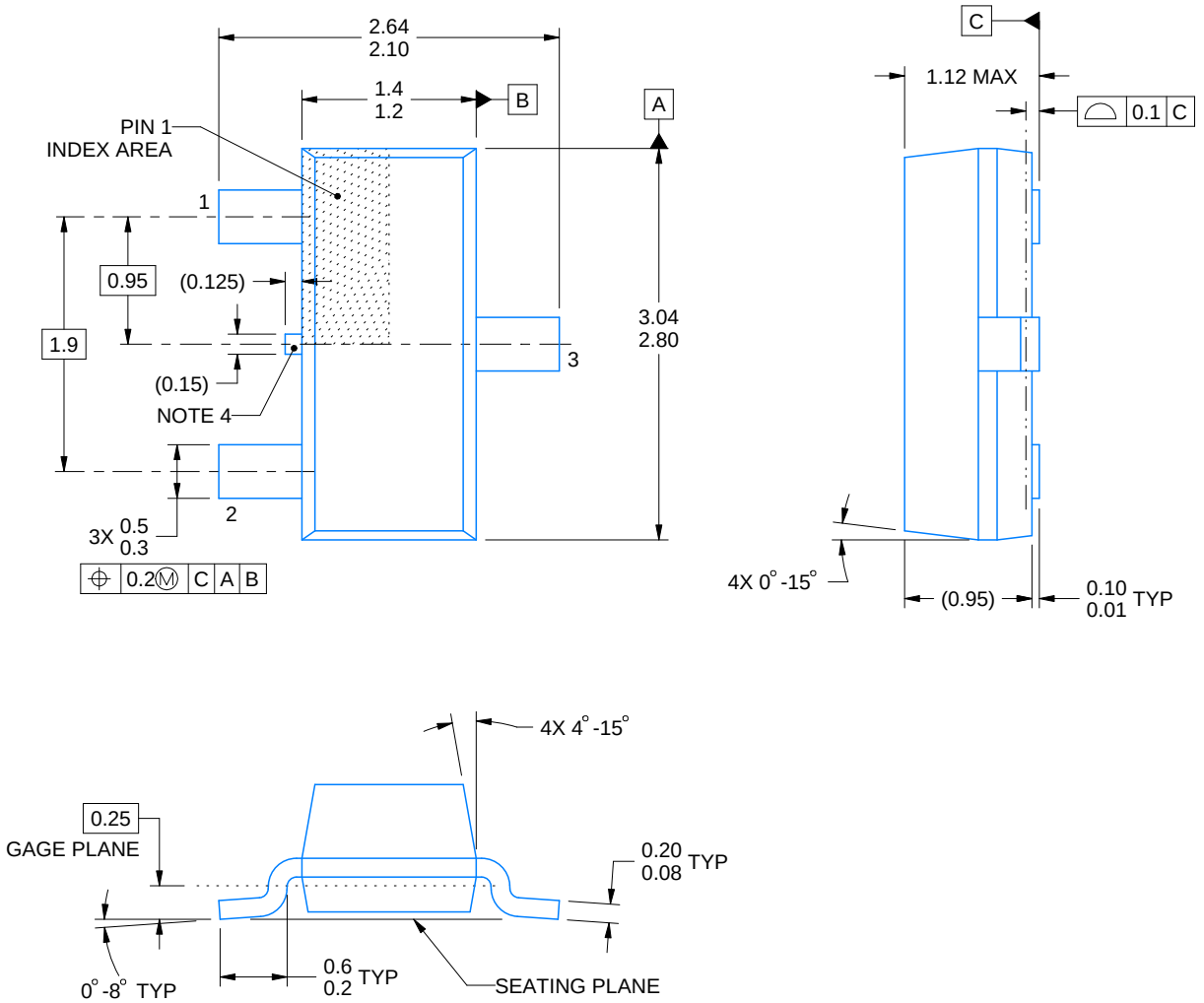

4214838/F 08/2024

NOTES:

1. All linear dimensions are in millimeters. Any dimensions in parenthesis are for reference only. Dimensioning and tolerancing per ASME Y14.5M.
2. This drawing is subject to change without notice.
3. Reference JEDEC registration TO-236, except minimum foot length.
4. Support pin may differ or may not be present.
5. Body dimensions do not include mold flash, protrusions, or gate burrs. Mold flash, protrusions, or gate burrs shall not exceed 0.25mm per side

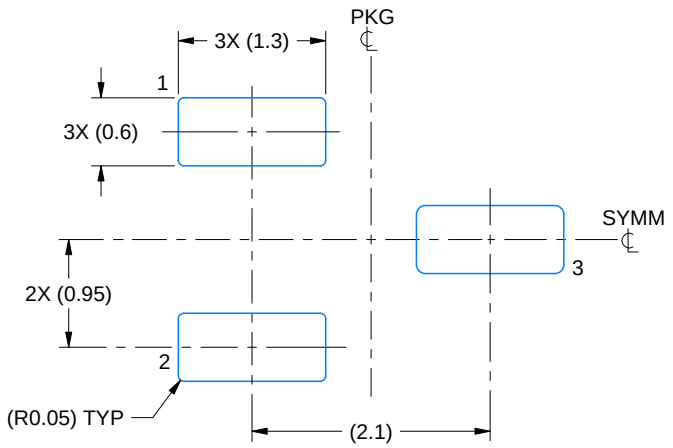

LAND PATTERN EXAMPLE
SCALE:15X

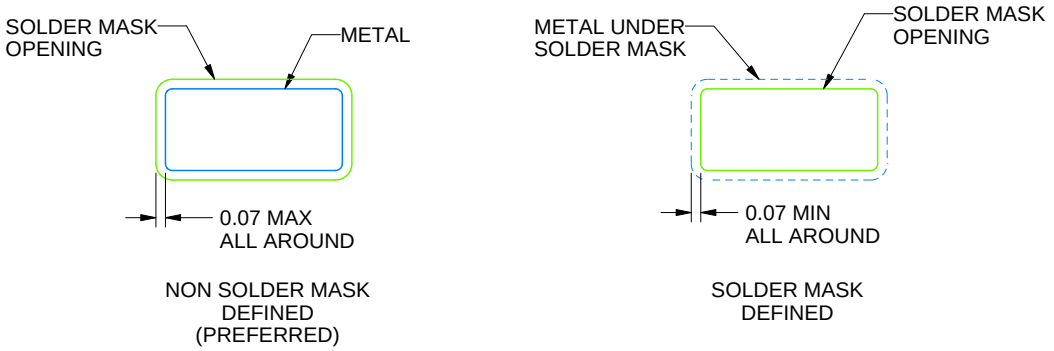

SOLDER MASK DETAILS

4214838/F 08/2024

NOTES: (continued)

5. Publication IPC-7351 may have alternate designs.
6. Solder mask tolerances between and around signal pads can vary based on board fabrication site.

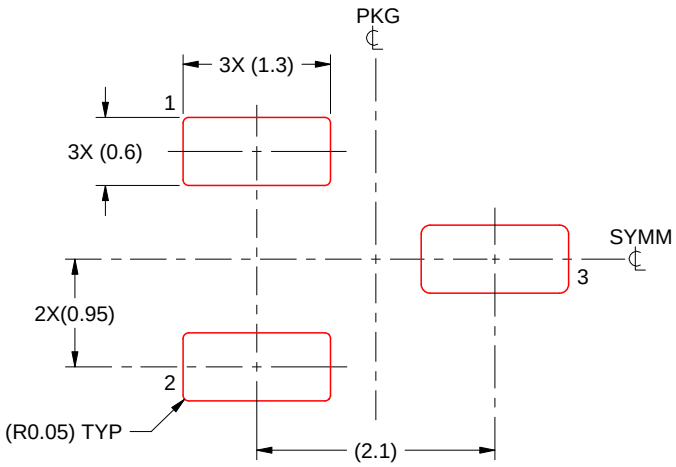

SOLDER PASTE EXAMPLE
BASED ON 0.125 THICK STENCIL
SCALE:15X

4214838/F 08/2024

NOTES: (continued)

7. Laser cutting apertures with trapezoidal walls and rounded corners may offer better paste release. IPC-7525 may have alternate design recommendations.
8. Board assembly site may have different recommendations for stencil design.

DPW 5 X2SON - 0.4 mm max height

PLASTIC SMALL OUTLINE - NO LEAD

Images above are just a representation of the package family, actual package may vary.
Refer to the product data sheet for package details.

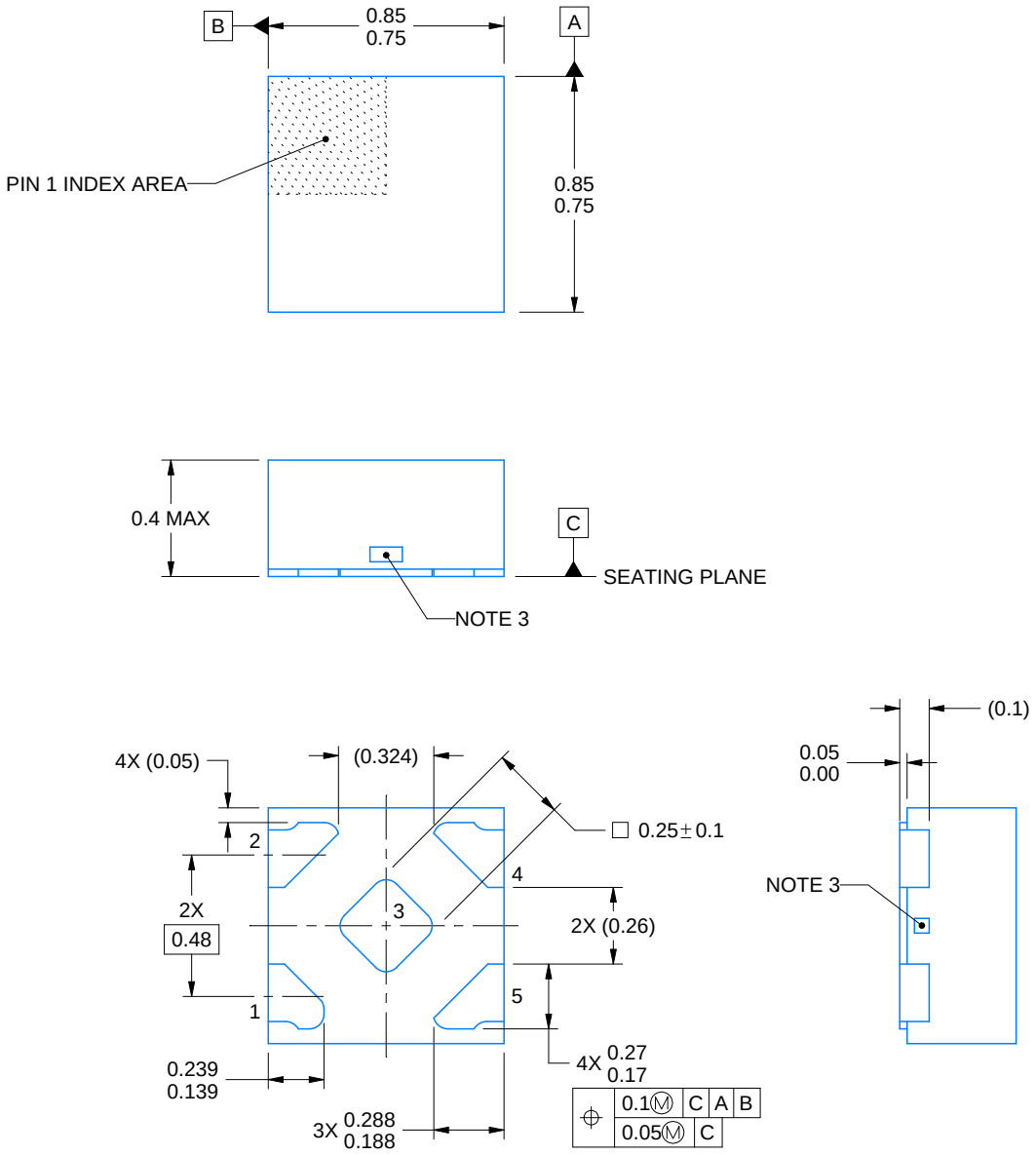

4223102/D 03/2022

NOTES:

1. All linear dimensions are in millimeters. Any dimensions in parenthesis are for reference only. Dimensioning and tolerancing per ASME Y14.5M.
2. This drawing is subject to change without notice.
3. The size and shape of this feature may vary.

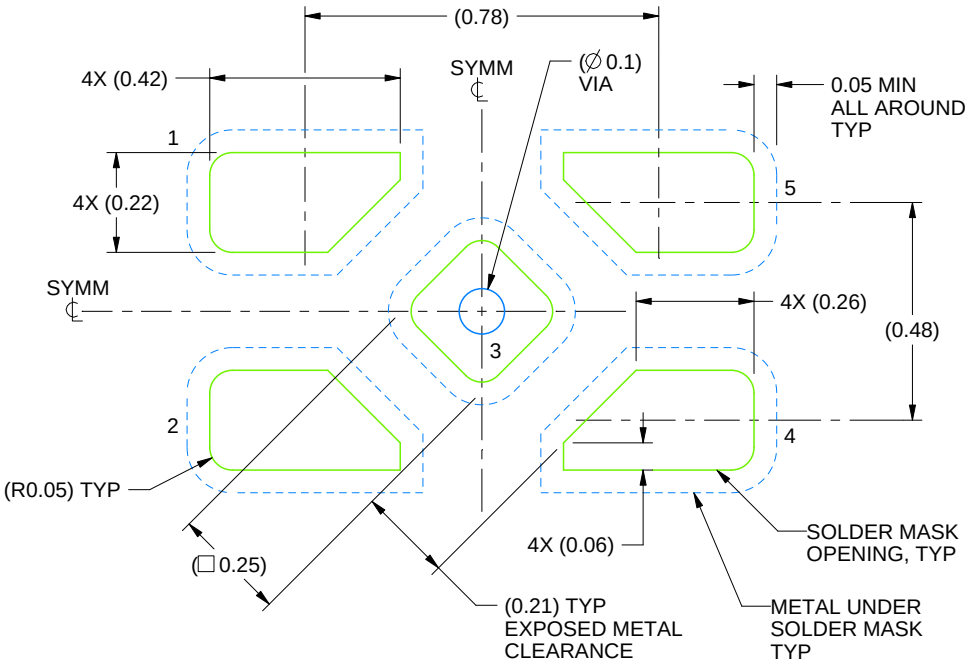

LAND PATTERN EXAMPLE
SOLDER MASK DEFINED
SCALE:60X

4223102/D 03/2022

NOTES: (continued)

4. This package is designed to be soldered to a thermal pad on the board. For more information, refer to QFN/SON PCB application note in literature No. SLUA271 (www.ti.com/lit/slua271).

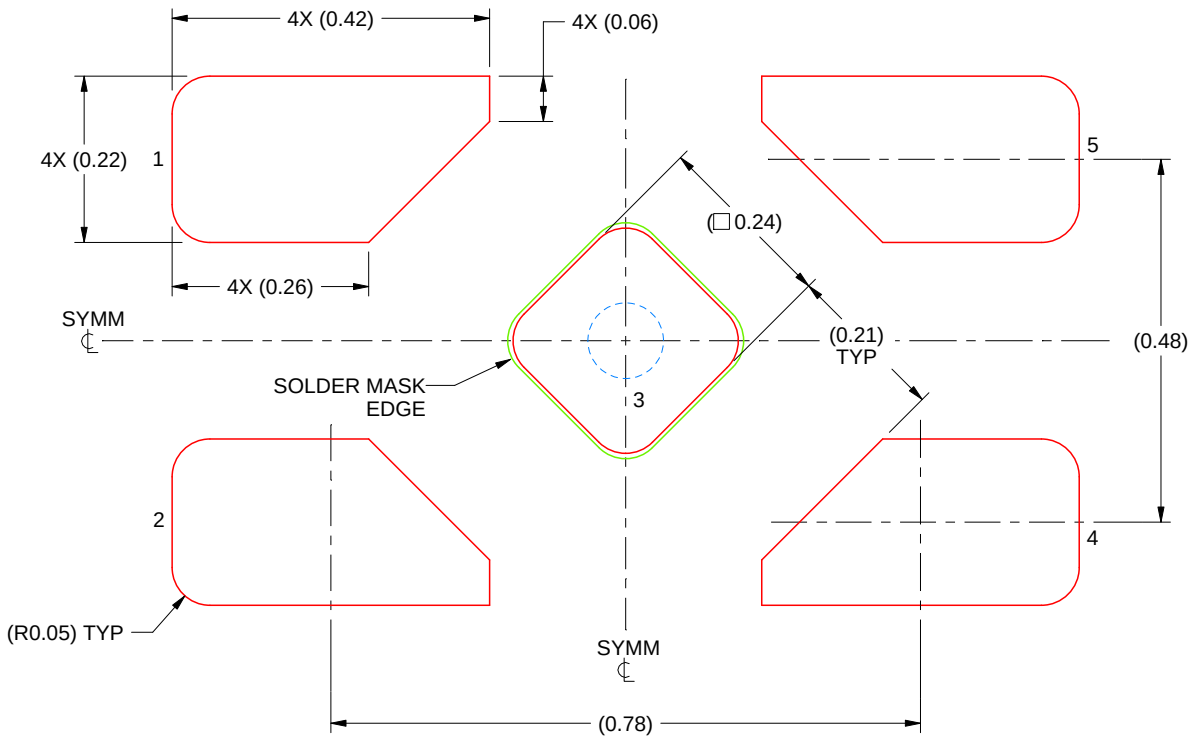

SOLDER PASTE EXAMPLE
BASED ON 0.1 mm THICK STENCIL

EXPOSED PAD 3
92% PRINTED SOLDER COVERAGE BY AREA UNDER PACKAGE
SCALE:100X

4223102/D 03/2022

NOTES: (continued)

5. Laser cutting apertures with trapezoidal walls and rounded corners may offer better paste release. IPC-7525 may have alternate design recommendations.

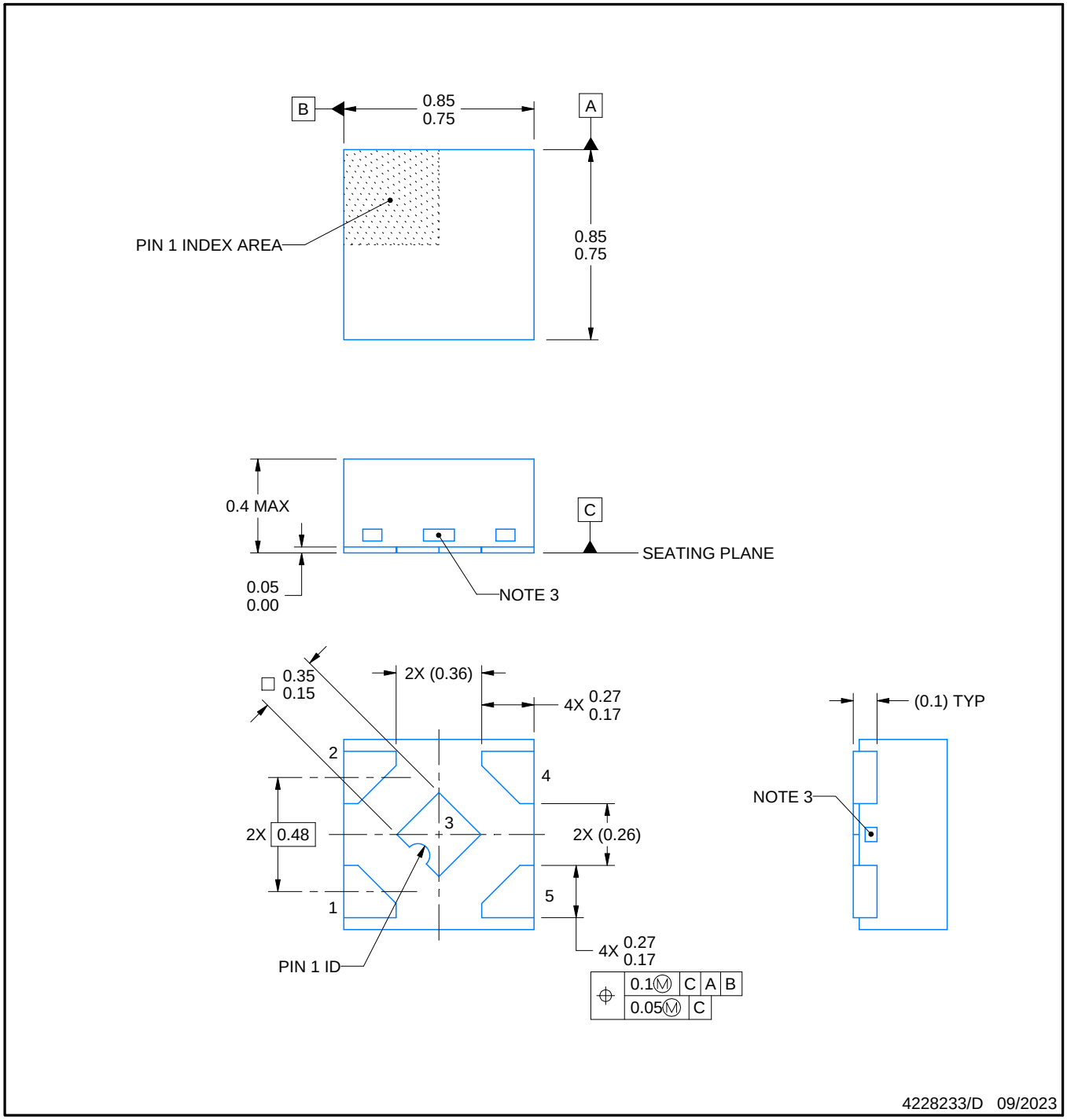

NOTES:

1. All linear dimensions are in millimeters. Any dimensions in parenthesis are for reference only. Dimensioning and tolerancing per ASME Y14.5M.
2. This drawing is subject to change without notice.
3. The size and shape of this feature may vary.

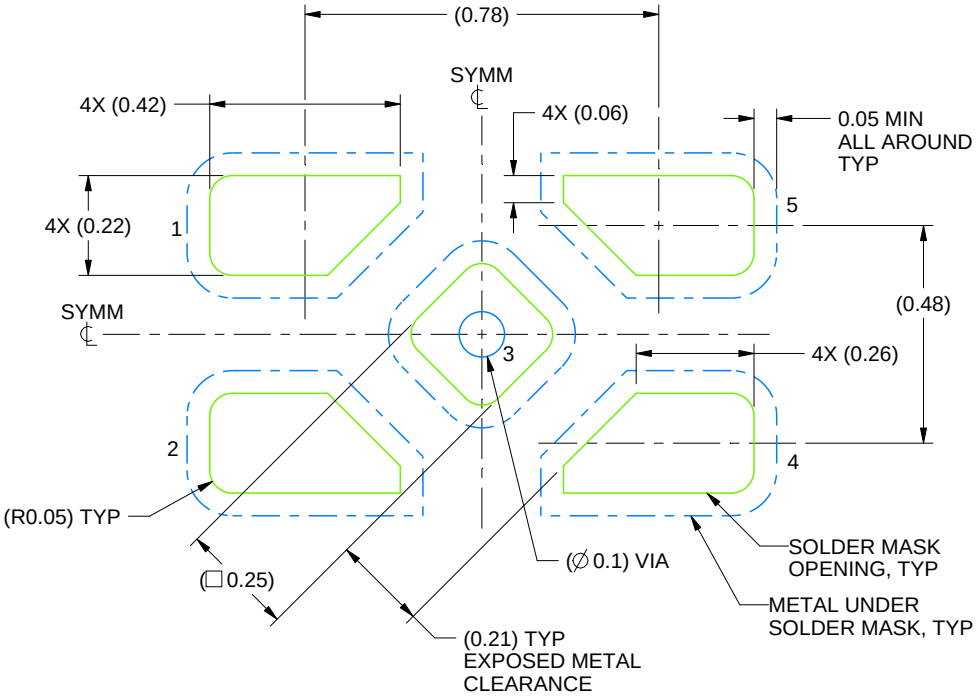

LAND PATTERN EXAMPLE
SOLDER MASK DEFINED
SCALE:60X

4228233/D 09/2023

NOTES: (continued)

4. This package is designed to be soldered to a thermal pad on the board. For more information, refer to QFN/SON PCB application note in literature No. SLUA271 (www.ti.com/lit/slua271).

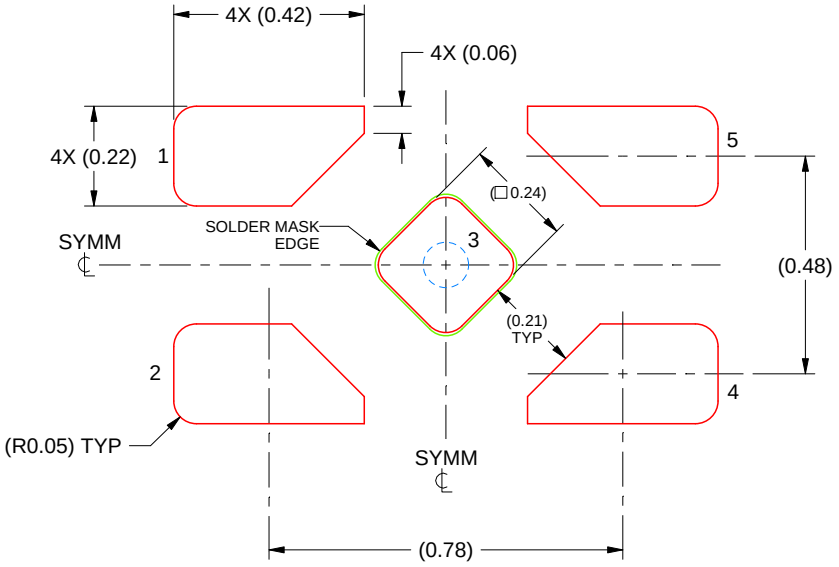

SOLDER PASTE EXAMPLE
BASED ON 0.1 mm THICK STENCIL

EXPOSED PAD 5
92% PRINTED SOLDER COVERAGE BY AREA UNDER PACKAGE
SCALE:60X

4228233/D 09/2023

NOTES: (continued)

5. Laser cutting apertures with trapezoidal walls and rounded corners may offer better paste release. IPC-7525 may have alternate design recommendations.

IMPORTANT NOTICE AND DISCLAIMER

TI PROVIDES TECHNICAL AND RELIABILITY DATA (INCLUDING DATA SHEETS), DESIGN RESOURCES (INCLUDING REFERENCE DESIGNS), APPLICATION OR OTHER DESIGN ADVICE, WEB TOOLS, SAFETY INFORMATION, AND OTHER RESOURCES “AS IS” AND WITH ALL FAULTS, AND DISCLAIMS ALL WARRANTIES, EXPRESS AND IMPLIED, INCLUDING WITHOUT LIMITATION ANY IMPLIED WARRANTIES OF MERCHANTABILITY, FITNESS FOR A PARTICULAR PURPOSE OR NON-INFRINGEMENT OF THIRD PARTY INTELLECTUAL PROPERTY RIGHTS.

These resources are intended for skilled developers designing with TI products. You are solely responsible for (1) selecting the appropriate TI products for your application, (2) designing, validating and testing your application, and (3) ensuring your application meets applicable standards, and any other safety, security, regulatory or other requirements.

These resources are subject to change without notice. TI grants you permission to use these resources only for development of an application that uses the TI products described in the resource. Other reproduction and display of these resources is prohibited. No license is granted to any other TI intellectual property right or to any third party intellectual property right. TI disclaims responsibility for, and you will fully indemnify TI and its representatives against, any claims, damages, costs, losses, and liabilities arising out of your use of these resources.

TI’s products are provided subject to TI’s Terms of Sale or other applicable terms available either on ti.com or provided in conjunction with such TI products. TI’s provision of these resources does not expand or otherwise alter TI’s applicable warranties or warranty disclaimers for TI products.

TI objects to and rejects any additional or different terms you may have proposed.

Mailing Address: Texas Instruments, Post Office Box 655303, Dallas, Texas 75265
Copyright © 2025, Texas Instruments Incorporated