MAX211 5V Multichannel RS-232 Line Driver and Receiver with ±15kV ESD Protection

1 Features

- RS-232 bus-pin ESD protection exceeds ±15kv using human-body model (HBM)
- Meets or exceeds the requirements of TIA/EIA-232-F and ITU v.28 standards
- Operates at 5V V_{CC} supply
- Four drivers and five receivers
- Operates up to 120kbit/s
- Low supply current in shutdown mode: 5μA typical
- External capacitors: 4 × 0.1μF
- Latch-up performance exceeds 100mA per JESD 78, class II

2 Applications

- Battery-powered systems
- PDAs
- Notebooks
- Laptops
- Palmtop PCs
- Hand-held equipment

3 Description

The MAX211 device consists of four line drivers, five line receivers, and a dual charge-pump circuit with ±15kV ESD protection pin to pin (serial-port connection pins, including GND). The device meets the requirements of TIA/EIA-232-F and provides the electrical interface between an asynchronous communication controller and the serial-port connector. The charge pump and four small external capacitors allow operation from a single 5V supply. The devices operate at data signaling rates up to 120kbit/s and a maximum of 30V/μs driver output slew rate.

The MAX211 has both shutdown (SHDN) and enable control ($\overline{EN}$). In shutdown mode, the charge pumps are turned off, V+ is pulled down to V_{CC}, V− is pulled to GND, and the transmitter outputs are disabled. This reduces supply current typically to 1μA. $\overline{EN}$ is used to put the receiver outputs into the high-impedance state to allow wired-OR connection of two RS-232 ports. It has no effect on the RS-232 drivers or the charge pumps.

Package Information

PART NUMBER	PACKAGE(1)	PACKAGE SIZE(2)
MAX211	DB (SSOP, 28)	10.2mm × 7.8mm
	DW (SOIC, 28)	17.9mm × 10.3mm

(1) For more information, see Section 11.
(2) The package size (length × width) is a nominal value and includes pins, where applicable.

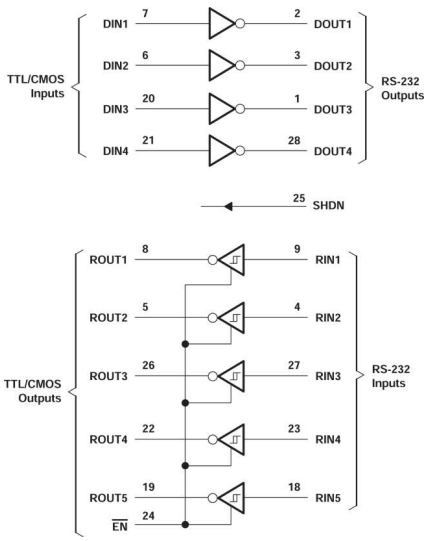

Logic Diagram (Positive Logic)

An IMPORTANT NOTICE at the end of this data sheet addresses availability, warranty, changes, use in safety-critical applications, intellectual property matters and other important disclaimers. PRODUCTION DATA.

Table of Contents

1 Features....1
2 Applications....1
3 Description....1
4 Pin Configuration and Functions....3
5 Specifications....4
5.1 Absolute Maximum Ratings....4
5.2 ESD Protection....4
5.3 Recommended Operating Conditions....4
5.4 Thermal Information....5
5.5 Electrical Characteristics....5
5.6 Electrical Characteristics, Driver....5
5.7 Switching Characteristics, Driver....5
5.8 Electrical Characteristics, Receiver....6
5.9 Switching Characteristics, Receiver....6
6 Parameter Measurement Information....7
7 Device Functional Modes....9
8 Application and Implementation....10
8.1 Application Information....10
9 Device and Documentation Support....13
9.1 Receiving Notification of Documentation Updates....13
9.2 Support Resources....13
9.3 Trademarks....13
9.4 Electrostatic Discharge Caution....13
9.5 Glossary....13
10 Revision History....13
11 Mechanical, Packaging, and Orderable Information....13

Copyright © 2024 Texas Instruments Incorporated

4 Pin Configuration and Functions

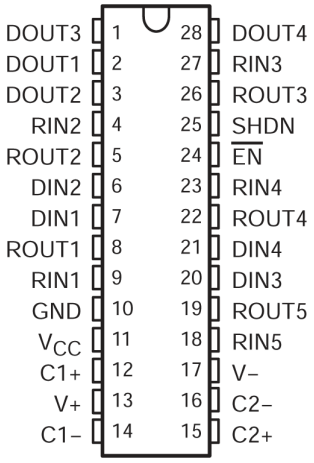

Figure 4-1. DB or DW Package (Top View)

Table 4-1. Pin Functions

PIN		TYPE[(1)]	DESCRIPTION
NAME	DB or DW		
DOUT3	1	O	RS232 line data output (to remote RS232 system)
DOUT1	2	O	RS232 line data output (to remote RS232 system)
DOUT2	3	O	RS232 line data output (to remote RS232 system)
RIN2	4	I	RS232 line data input (from remote RS232 system)
ROUT2	5	O	Logic data output (to UART)
DIN2	6	I	Logic data input (from UART)
DIN1	7	I	Logic data input (from UART)
ROUT1	8	O	Logic data output (to UART)
RIN1	9	I	RS232 line data input (from remote RS232 system)
GND	10	-	Ground
V_{CC}	11	--	Supply Voltage, Connect to external 3V to 5.5V power supply
C1+	12	--	Positive lead of C1 capacitor
V+	13	O	Positive charge pump output for storage capacitor only
C1-	14	--	Negative lead of C1 capacitor
C2+	15	--	Positive lead of C2 capacitor
C2-	16	--	Negative lead of C2 capacitor
V-	17	O	Negative charge pump output for storage capacitor only
RIN5	18	I	RS232 line data input (from remote RS232 system)
ROUT5	19	O	Logic data output (to UART)
DIN3	20	I	Logic data input (from UART)
DIN4	21	I	Logic data input (from UART)
ROUT4	22	O	Logic data output (to UART)
RIN4	23	I	RS232 line data input (from remote RS232 system)
$\overline{EN}$	24	--	Active low enable
SHDN	25	--	Active high shutdown
ROUT3	26	O	Logic data output (to UART)
RIN3	27	I	RS232 line data input (from remote RS232 system)
DOUT4	28	O	RS232 line data output (to remote RS232 system)
Thermal Pad	-	--	Exposed thermal pad. Can be connected to GND or left floating.

(1) Signal Types: I = Input, O = Output, I/O = Input or Output.

Copyright © 2024 Texas Instruments Incorporated

5 Specifications

5.1 Absolute Maximum Ratings

over operating free-air temperature range (unless otherwise noted)[1]

			MIN	MAX	UNIT
V_{CC} [2]	Supply voltage range		−0.3	6	V
V+ [2]	Positive charge pump voltage range		V_{CC} − 0.3	14	V
V− [2]	Negative charge pump voltage range		0.3	−14	V
V_I	Input voltage range	Drivers	−0.3	V+ + 0.3	V
		Receivers (DW package)		±30	V
		Receivers (DB package)		±25	V
V_O	Output voltage range	Drivers	V− − 0.3V	V+ + 0.3	V
		Receivers	−0.3	V_{CC} + 0.3	V
	Short-circuit duration	DOUT	Continuous		
T_J	Operating virtual junction temperature			150	°C
T_{stg}	Storage temperature range		−65	150	°C

(1) Stresses beyond those listed under “absolute maximum ratings” may cause permanent damage to the device. These are stress ratings only, and functional operation of the device at these or any other conditions beyond those indicated under “recommended operating conditions” is not implied. Exposure to absolute-maximum-rated conditions for extended periods may affect device reliability.
(2) All voltages are with respect to network GND.

5.2 ESD Protection

PIN	TEST CONDITIONS	TYP	UNIT
D_{OUT}, R_{IN}	Human-Body Model	±15	kV

5.3 Recommended Operating Conditions

(see[1] and Figure 6-4)

			MIN	NOM	MAX	UNIT
Supply voltage			1.5	5	5.5	V
V_{IH}	Driver high-level input voltage	DIN	2			V
	Control high-level input voltage	$\overline{EN}$, SHDN	2.4			
V_{IL}	Driver and control low-level input voltage	DIN, $\overline{EN}$, SHDN			0.8	V
V_I	Driver and control input voltage	DIN, $\overline{EN}$, SHDN	0		5.5	V
	Receiver input voltage	DW Package	−30		30	
		DB Package	-25		25	V
T_A	Operating free-air temperature	MAX211C	0		70	°C
		MAX211I	−40		85	

(1) Test conditions are C1−C4 = 0.1μF at V_{CC} = 5V ± 0.5V.

Copyright © 2024 Texas Instruments Incorporated

5.4 Thermal Information

THERMAL METRIC[1]		DB	DW	UNIT
		28-PINS		
$R_{\theta JA}$	Junction-to-ambient thermal resistance	66.1	46	°C/W
$R_{\theta JC(top)}$	Junction-to-case (top) thermal resistance	33.2	33.5	°C/W
$R_{\theta JB}$	Junction-to-board thermal resistance	37.0	37.1	°C/W
ψ_{JT}	Junction-to-top characterization parameter	4.6	7.5	°C/W
ψ_{JB}	Junction-to-board characterization parameter	36.5	37.1	°C/W
$R_{\theta JC(bot)}$	Junction-to-case (bottom) thermal resistance	n/a	n/a	°C/W

(1) For more information about traditional and new thermal metrics, see the *Semiconductor and IC package thermal metrics* application report.

5.5 Electrical Characteristics

over recommended ranges of supply voltage and operating free-air temperature (unless otherwise noted) (see [2])

PARAMETER		TEST CONDITIONS		MIN	TYP[1]	MAX	UNIT
I_{CC}	Supply current	No load,	See Figure 8-1		14	20	mA
	Shutdown supply current (DB package)	T_A = 25°C	See Figure 6-1		5	10	µA
	Shutdown supply current (DW package)	T_A = 25°C	See Figure 6-1		1	20	µA

(1) All typical values are at V_{CC} = 5V, and T_A = 25°C.
(2) Test conditions are C1−C4 = 0.1µF at V_{CC} = 5V ± 0.5V.

5.6 Electrical Characteristics, Driver

over recommended ranges of supply voltage and operating free-air temperature (unless otherwise noted) (see [3] and Figure 6-4)

PARAMETER		TEST CONDITIONS		MIN	TYP[1]	MAX	UNIT
V_{OH}	High-level output voltage	DOUT at R_L = 3kΩ to GND		5	9		V
V_{OL}	Low-level output voltage	DOUT at R_L = 3kΩ to GND		−5	−9		V
I_{IH}	Driver high-level input current	DIN = V_{CC}			15	200	µA
	Control high-level input current	$\overline{EN}$, SHDN = V_{CC}			3	10	
I_{IL}	Driver low-level input current	DIN = 0V			−15	−200	µA
	Control low-level input current	$\overline{EN}$, SHDN = 0V			−3	−10	
I_{OS} [2]	Short-circuit output current	V_{CC} = 5.5V,	V_O = 0V		±10	±60	mA
r_o	Output resistance	V_{CC}, V+, and V− = 0V,	V_O = ±2V	300			Ω

(1) All typical values are at V_{CC} = 5V, and T_A = 25°C.
(2) Short-circuit durations should be controlled to prevent exceeding the device absolute power dissipation ratings, and not more than one output should be shorted at a time.
(3) Test conditions are C1−C4 = 0.1µF at V_{CC} = 5V ± 0.5V.

5.7 Switching Characteristics, Driver

over recommended ranges of supply voltage and operating free-air temperature (unless otherwise noted) (see [3])

PARAMETER		TEST CONDITIONS		MIN	TYP[1]	MAX	UNIT
	Maximum data rate	C_L = 50pF to 1000pF, One DOUT switching,	R_L = 3kΩ to 7kΩ, See Figure 6-2	120			kbit/s
$t_{PLH\ (D)}$	Propagation delay time, low- to high-level output	C_L = 2500pF, All drivers loaded,	R_L = 3kΩ, See Figure 6-2		2		µs
$t_{PHL\ (D)}$	Propagation delay time, high- to low-level output	C_L = 2500pF, All drivers loaded,	R_L = 3kΩ, See Figure 6-2		2		µs
$t_{sk(p)}$	Pulse skew[2]	C_L = 150pF to 2500pF,	R_L = 3kΩ to 7kΩ, See Figure 6-3		300		ns

Copyright © 2024 Texas Instruments Incorporated

5.7 Switching Characteristics, Driver (continued)

over recommended ranges of supply voltage and operating free-air temperature (unless otherwise noted) (see [3])

PARAMETER		TEST CONDITIONS		MIN	TYP[1]	MAX	UNIT
SR(tr)	Slew rate, transition region (see Figure 6-2)	C_L = 50pF to 1000pF, V_{CC} = 5V	R_L = 3kΩ to 7kΩ,	3	6	30	V/µs

(1) All typical values are at V_{CC} = 5V, and T_A = 25°C.
(2) Pulse skew is defined as $|t_{PLH} - t_{PHL}|$ of each channel of the same device.
(3) Test conditions are C1−C4 = 0.1µF at V_{CC} = 5V ± 0.5V.

5.8 Electrical Characteristics, Receiver

over recommended ranges of supply voltage and operating free-air temperature (unless otherwise noted) (see [2] and Figure 8-1)

PARAMETER		TEST CONDITIONS		MIN	TYP[1]	MAX	UNIT
V_{OH}	High-level output voltage	I_{OH} = −1mA		3.5	V_{CC}−0.	4 V	V
V_{OL}	Low-level output voltage	I_{OL} = 1.6mA				0.4	V
V_{IT+}	Positive-going input threshold voltage	V_{CC} = 5V,	T_A = 25°C		1.7	2.4	V
V_{IT-}	Negative-going input threshold voltage	V_{CC} = 5V,	T_A = 25°C	0.8	1.2		V
V_{hys}	Input hysteresis ($V_{IT+} - V_{IT-}$)			0.2	0.5	1	V
r_i	Input resistance	V_{CC} = 5V,	T_A = 25°C	3	5	7	kΩ
	Output leakage current	$\overline{EN}$ = V_{CC},	0 ≤ ROUT ≤ V_{CC}		±0.05	±10	µA

(1) All typical values are at V_{CC} = 5V, and T_A = 25°C.
(2) Test conditions are C1−C4 = 0.1µF at V_{CC} = 5V ± 0.5V.

5.9 Switching Characteristics, Receiver

over recommended ranges of supply voltage and operating free-air temperature (unless otherwise noted) (see [3])

PARAMETER		TEST CONDITIONS		MIN	TYP[1]	MAX	UNIT
$t_{PLH\ (R)}$	Propagation delay time, low- to high-level output	C_L= 150pF,	See Figure 6-4		0.5	10	µs
$t_{PHL\ (R)}$	Propagation delay time, high- to low-level output	C_L= 150pF,	See Figure 6-4		0.5	10	µs
t_{en}	Output enable time	C_L= 150pF, See Figure 6-5	R_L = 1kΩ,		600		ns
t_{dis}	Output disable time	C_L= 150pF, See Figure 6-5	R_L = 1kΩ,		200		ns
$t_{sk(p)}$	Pulse skew[2]	See Figure 6-3			300		ns

(1) All typical values are at V_{CC} = 5V, and T_A = 25°C.
(2) Pulse skew is defined as $|t_{PLH} - t_{PHL}|$ of each channel of the same device.
(3) Test conditions are C1−C4 = 0.1µF, at V_{CC} = 5V ± 0.5V.

Copyright © 2024 Texas Instruments Incorporated

6 Parameter Measurement Information

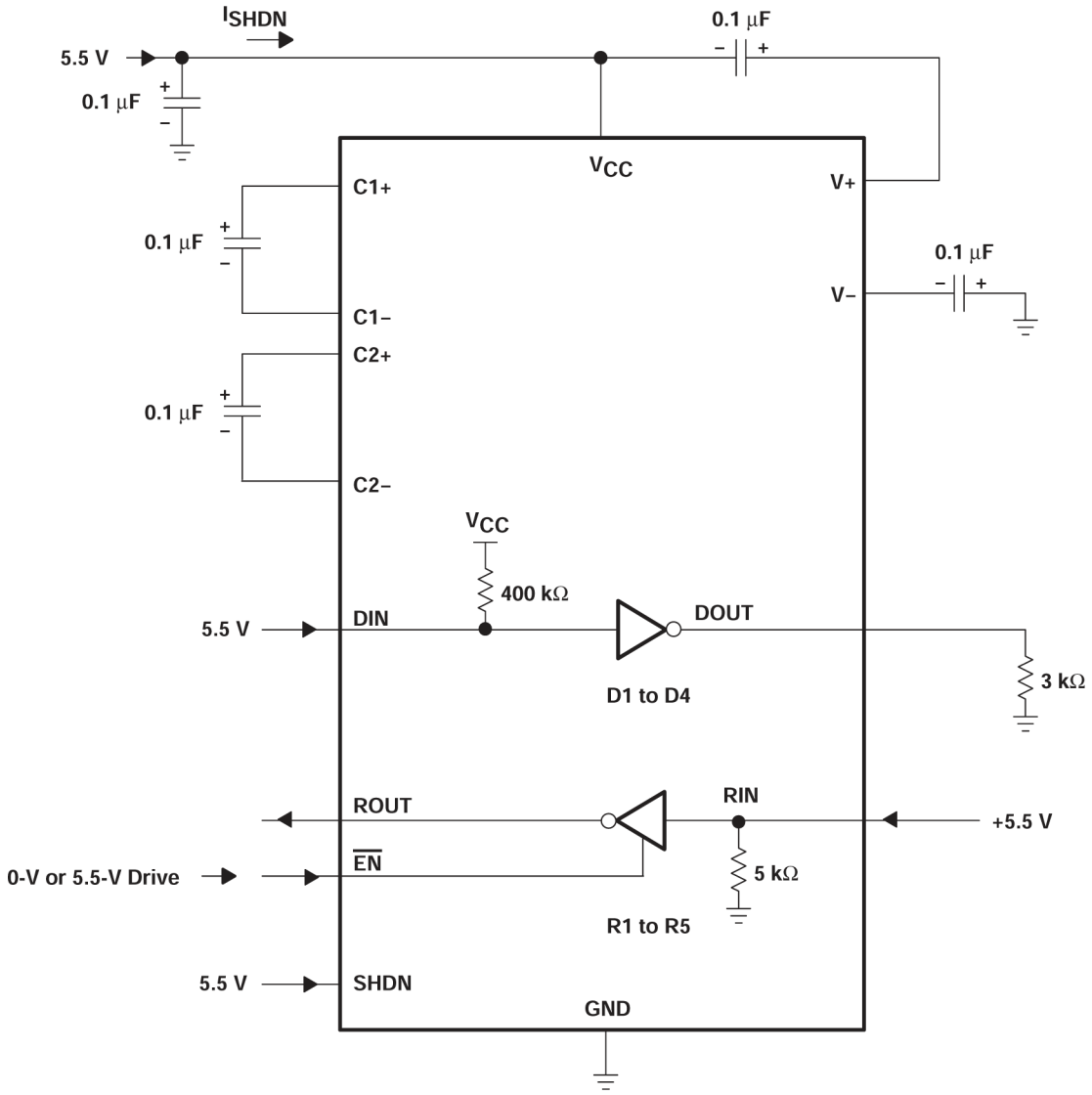

Figure 6-1. Shutdown Current Test Circuit

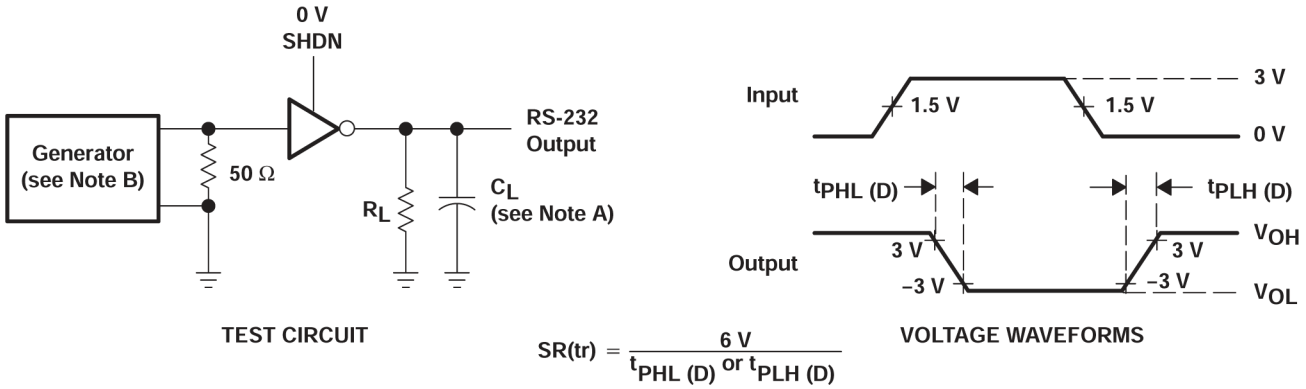

A. C_L includes probe and jig capacitance.

B. The pulse generator has the following characteristics: PRR = 120kbit/s, Z_O = 50Ω, 50% duty cycle, t_r ≤ 10ns, t_f ≤ 10ns.

Figure 6-2. Driver Slew Rate and Propagation Delay Times

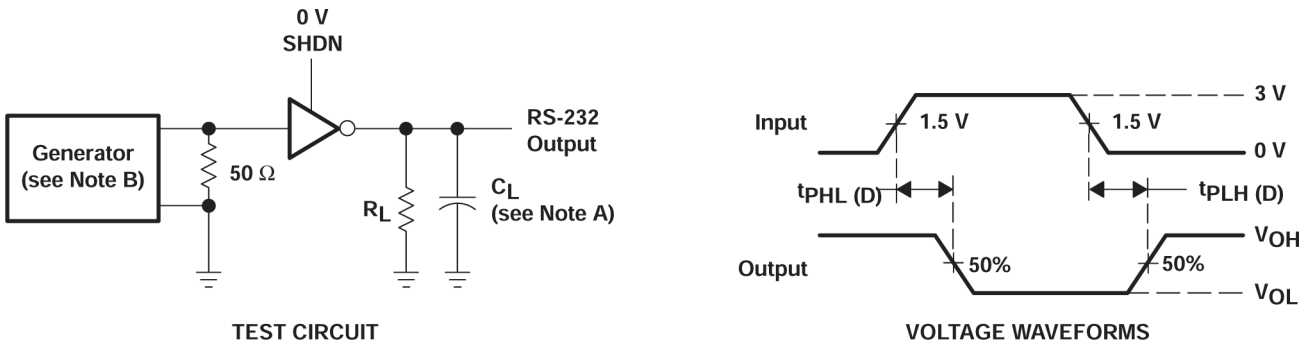

A. C_L includes probe and jig capacitance.
B. The pulse generator has the following characteristics: PRR = 120kbit/s, Z_O = 50Ω, 50% duty cycle, t_r ≤ 10ns, t_f ≤ 10ns.

Figure 6-3. Driver Pulse Skew

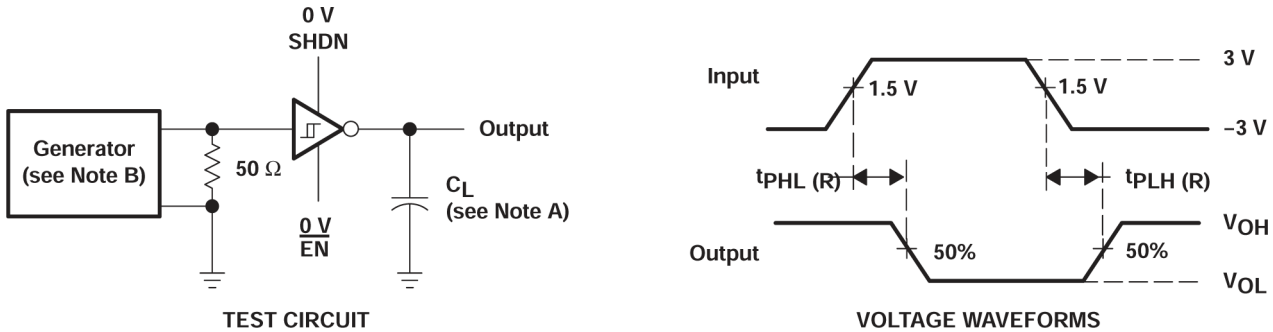

A. C_L includes probe and jig capacitance.
B. The pulse generator has the following characteristics: Z_O = 50Ω, 50% duty cycle, t_r ≤ 10ns, t_f ≤ 10ns.

Figure 6-4. Receiver Propagation Delay Times

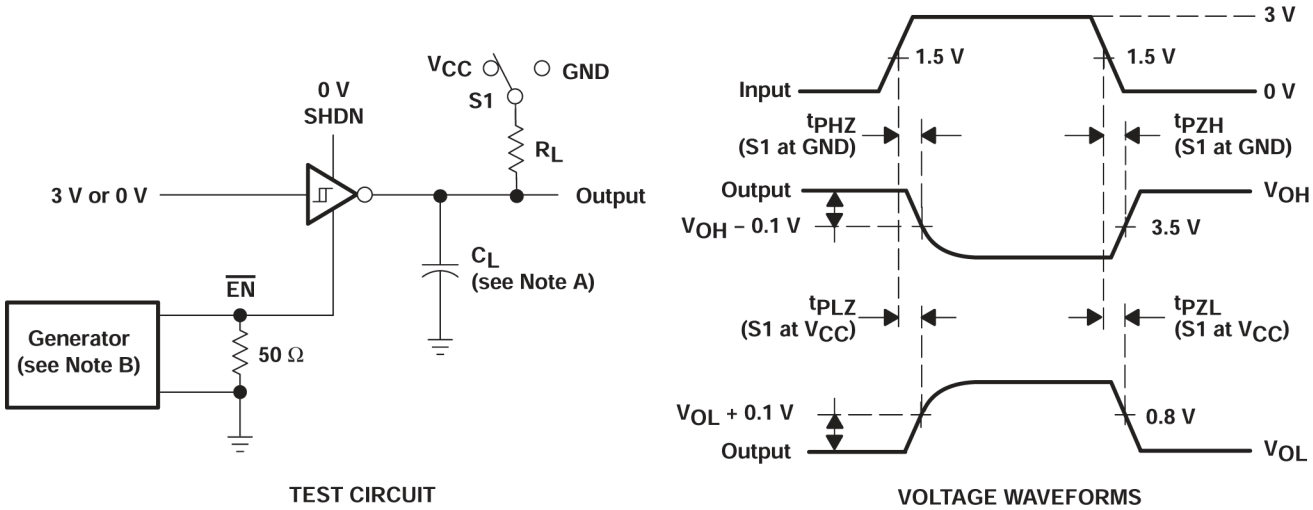

A. C_L includes probe and jig capacitance.
B. The pulse generator has the following characteristics: Z_O = 50Ω, 50% duty cycle, t_r ≤ 10ns, t_f ≤ 10ns.
C. t_{PLZ} and t_{PHZ} are the same as t_{dis}.
D. t_{PZL} and t_{PZH} are the same as t_{en}.

Figure 6-5. Receiver Enable and Disable Times

Copyright © 2024 Texas Instruments Incorporated

7 Device Functional Modes

Table 7-1. Function Table

INPUTS[1]		DRIVER	RECEIVER	DEVICE STATUS
SHDN	$\overline{EN}$			
L	L	All active	All active	Normal operation
L	H	All active	Z	Normal operation
H	X	Z	Z	Shutdown

(1) X = don't care, Z = high impedance

Table 7-2. Function Table Each Driver

INPUTS[1]		OUTPUT DOUT	DRIVER STATUS
DIN	SHDN		
L	L	H	Normal operation
H	L	L	
X	H	Z	Powered off

(1) X = don't care, Z = high impedance

Table 7-3. Function Table Each Receiver

INPUTS[1]		OUTPUT ROUT	RECEIVER STATUS
RIN	$\overline{EN}$		
L	L	H	Normal operation
H	L	L	
X	H	Z	Powered off

(1) X = don't care, Z = high impedance

8 Application and Implementation

Note

Information in the following applications sections is not part of the TI component specification, and TI does not warrant its accuracy or completeness. TI's customers are responsible for determining suitability of components for their purposes, as well as validating and testing their design implementation to confirm system functionality.

8.1 Application Information

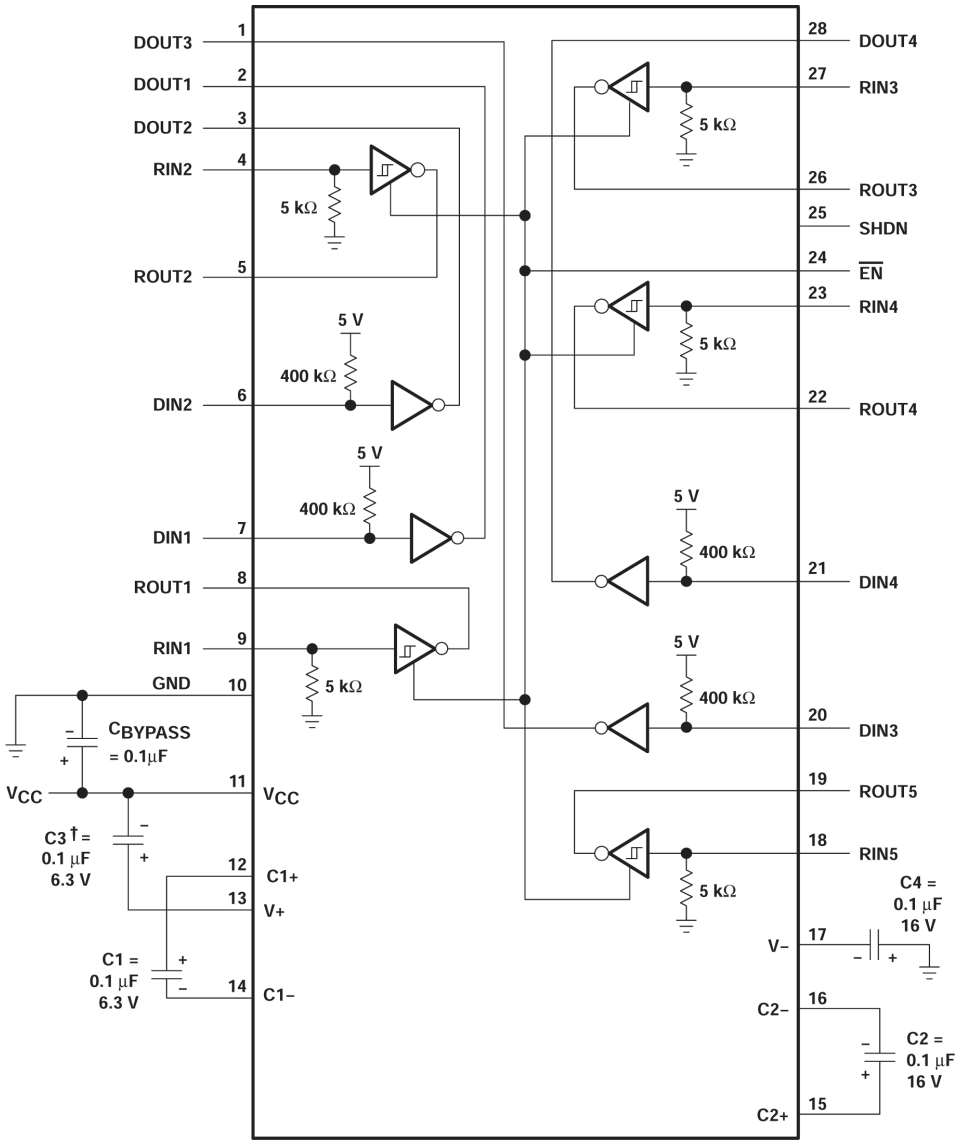

Note

C3 can be connected to V_{CC} or GND.

A. Resistor values shown are nominal.
B. Nonpolarized ceramic capacitors are acceptable. If polarized tantalum or electrolytic capacitors are used, connect the capacitors as shown.

Figure 8-1. Typical Operating Circuit and Capacitor Values

Copyright © 2024 Texas Instruments Incorporated

8.1.1 Capacitor Selection

The capacitor type used for C1−C4 is not critical for proper operation. The MAX211 requires 0.1µF capacitors, although capacitors up to 10µF can be used without harm. Ceramic dielectrics are suggested for the 0.1µF capacitors. When using the minimum recommended capacitor values, make sure the capacitance value does not degrade excessively as the operating temperature varies. If in doubt, use capacitors with a larger (2×) nominal value. The capacitors' effective series resistance (ESR), which usually rises at low temperatures, influences the amount of ripple on V+ and V−.

Use larger capacitors (up to 10µF) to reduce the output impedance at V+ and V−.

Bypass V_{CC} to ground with at least 0.1µF. In applications sensitive to power-supply noise generated by the charge pumps, decouple V_{CC} to ground with a capacitor the same size as (or larger than) the charge-pump capacitors (C1−C4).

8.1.2 Electrostatic Discharge (ESD) Protection

Texas Instruments MAX211 devices have standard ESD protection structures incorporated on the pins to protect against electrostatic discharges encountered during assembly and handling. In addition, the RS232 bus pins (driver outputs and receiver inputs) of these devices have an extra level of ESD protection. Advanced ESD structures were designed to successfully protect these bus pins against ESD discharge of ±15kV when powered down.

8.1.3 ESD Test Conditions

ESD testing is stringently performed by TI, based on various conditions and procedures. Please contact TI for a reliability report that documents test setup, methodology, and results.

8.1.4 Human-Body Model

The Human-Body Model (HBM) of ESD testing is shown in Figure 8-2. Figure 8-3 shows the current waveform that is generated during a discharge into a low impedance. The model consists of a 100pF capacitor charged to the ESD voltage of concern and subsequently discharged into the DUT through a 1.5kΩ resistor.

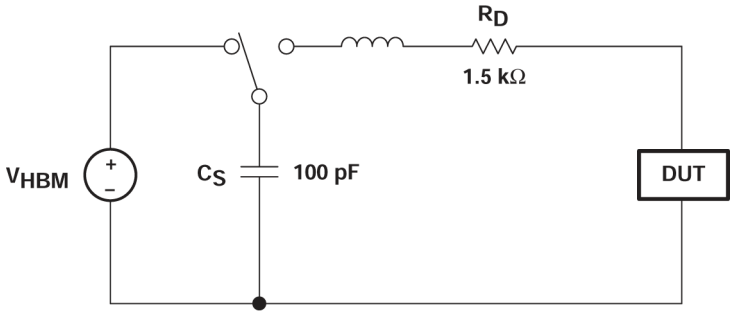

Figure 8-2. HBM ESD Test Circuit

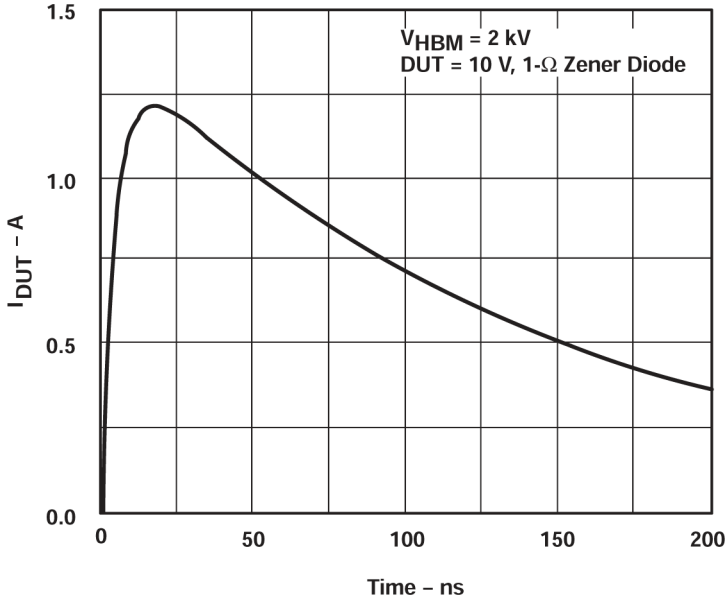

Figure 8-3. Typical HBM Current Waveform

8.1.5 Machine Model

The Machine Model (MM) ESD test applies to all pins, using a 200pF capacitor with no discharge resistance. The purpose of the MM test is to simulate possible ESD conditions that can occur during the handling and assembly processes of manufacturing. In this case, ESD protection is required for all pins, not just RS-232 pins. However, after PC board assembly, the MM test no longer is as pertinent to the RS-232 pins.

Copyright © 2024 Texas Instruments Incorporated

9 Device and Documentation Support

TI offers an extensive line of development tools. Tools and software to evaluate the performance of the device, generate code, and develop solutions are listed below.

9.1 Receiving Notification of Documentation Updates

To receive notification of documentation updates, navigate to the device product folder on ti.com. Click on *Notifications* to register and receive a weekly digest of any product information that has changed. For change details, review the revision history included in any revised document.

9.2 Support Resources

TI E2E™ support forums are an engineer's go-to source for fast, verified answers and design help — straight from the experts. Search existing answers or ask your own question to get the quick design help you need.

Linked content is provided "AS IS" by the respective contributors. They do not constitute TI specifications and do not necessarily reflect TI's views; see TI's Terms of Use.

9.3 Trademarks

TI E2E™ is a trademark of Texas Instruments.
All trademarks are the property of their respective owners.

9.4 Electrostatic Discharge Caution

This integrated circuit can be damaged by ESD. Texas Instruments recommends that all integrated circuits be handled with appropriate precautions. Failure to observe proper handling and installation procedures can cause damage.

ESD damage can range from subtle performance degradation to complete device failure. Precision integrated circuits may be more susceptible to damage because very small parametric changes could cause the device not to meet its published specifications.

9.5 Glossary

TI Glossary	This glossary lists and explains terms, acronyms, and definitions.

10 Revision History

NOTE: Page numbers for previous revisions may differ from page numbers in the current version.

Changes from Revision E (January 2004) to Revision F (July 2024)	Page
• Changed the numbering format for tables, figures, and cross-references throughout the document	1
• Changed the Input voltage range for Receivers from ±30V to ±25V for the DB package in the *Absolute Maximum Ratings* and the *Recommended Operating Conditions*	4
• Changed the Shutdown supply current for DB package TYP value from 1μA to 5μA *Electrical Characteristics*	5

11 Mechanical, Packaging, and Orderable Information

The following pages include mechanical, packaging, and orderable information. This information is the most current data available for the designated devices. This data is subject to change without notice and revision of this document. For browser-based versions of this data sheet, refer to the left-hand navigation.

Copyright © 2024 Texas Instruments Incorporated

PACKAGING INFORMATION

Orderable part number	Status (1)	Material type (2)	Package | Pins	Package qty | Carrier	RoHS (3)	Lead finish/ Ball material (4)	MSL rating/ Peak reflow (5)	Op temp (°C)	Part marking (6)
MAX211CDBR	Obsolete	Production	SSOP (DB) | 28	-	-	Call TI	Call TI	0 to 70	MAX211C
MAX211CDW	Obsolete	Production	SOIC (DW) | 28	-	-	Call TI	Call TI	0 to 70	MAX211C
MAX211CDWR	Active	Production	SOIC (DW) | 28	1000 | LARGE T&R	Yes	NIPDAU	Level-1-260C-UNLIM	0 to 70	MAX211C
MAX211CDWR.A	Active	Production	SOIC (DW) | 28	1000 | LARGE T&R	Yes	NIPDAU	Level-1-260C-UNLIM	0 to 70	MAX211C
MAX211IDB	Obsolete	Production	SSOP (DB) | 28	-	-	Call TI	Call TI	-40 to 85	MAX211I
MAX211IDBR	Active	Production	SSOP (DB) | 28	2000 | LARGE T&R	Yes	NIPDAU | NIPDAU	Level-1-260C-UNLIM	-40 to 85	MAX211I
MAX211IDBR.A	Active	Production	SSOP (DB) | 28	2000 | LARGE T&R	Yes	NIPDAU	Level-1-260C-UNLIM	-40 to 85	MAX211I
MAX211IDBRG4	Active	Production	SSOP (DB) | 28	2000 | LARGE T&R	Yes	NIPDAU	Level-1-260C-UNLIM	-40 to 85	MAX211I
MAX211IDW	Obsolete	Production	SOIC (DW) | 28	-	-	Call TI	Call TI	-40 to 85	MAX211I
MAX211IDWR	Active	Production	SOIC (DW) | 28	1000 | LARGE T&R	Yes	NIPDAU	Level-1-260C-UNLIM	-40 to 85	MAX211I
MAX211IDWR.A	Active	Production	SOIC (DW) | 28	1000 | LARGE T&R	Yes	NIPDAU	Level-1-260C-UNLIM	-40 to 85	MAX211I

(1) **Status:** For more details on status, see our product life cycle.

(2) **Material type:** When designated, preproduction parts are prototypes/experimental devices, and are not yet approved or released for full production. Testing and final process, including without limitation quality assurance, reliability performance testing, and/or process qualification, may not yet be complete, and this item is subject to further changes or possible discontinuation. If available for ordering, purchases will be subject to an additional waiver at checkout, and are intended for early internal evaluation purposes only. These items are sold without warranties of any kind.

(3) **RoHS values:** Yes, No, RoHS Exempt. See the TI RoHS Statement for additional information and value definition.

(4) **Lead finish/Ball material:** Parts may have multiple material finish options. Finish options are separated by a vertical ruled line. Lead finish/Ball material values may wrap to two lines if the finish value exceeds the maximum column width.

(5) **MSL rating/Peak reflow:** The moisture sensitivity level ratings and peak solder (reflow) temperatures. In the event that a part has multiple moisture sensitivity ratings, only the lowest level per JEDEC standards is shown. Refer to the shipping label for the actual reflow temperature that will be used to mount the part to the printed circuit board.

(6) **Part marking:** There may be an additional marking, which relates to the logo, the lot trace code information, or the environmental category of the part.

Multiple part markings will be inside parentheses. Only one part marking contained in parentheses and separated by a "~" will appear on a part. If a line is indented then it is a continuation of the previous line and the two combined represent the entire part marking for that device.

Important Information and Disclaimer: The information provided on this page represents TI's knowledge and belief as of the date that it is provided. TI bases its knowledge and belief on information provided by third parties, and makes no representation or warranty as to the accuracy of such information. Efforts are underway to better integrate information from third parties. TI has taken and continues to take reasonable steps to provide representative and accurate information but may not have conducted destructive testing or chemical analysis on incoming materials and chemicals. TI and TI suppliers consider certain information to be proprietary, and thus CAS numbers and other limited information may not be available for release.

In no event shall TI's liability arising out of such information exceed the total purchase price of the TI part(s) at issue in this document sold by TI to Customer on an annual basis.

TAPE AND REEL INFORMATION

REEL DIMENSIONS

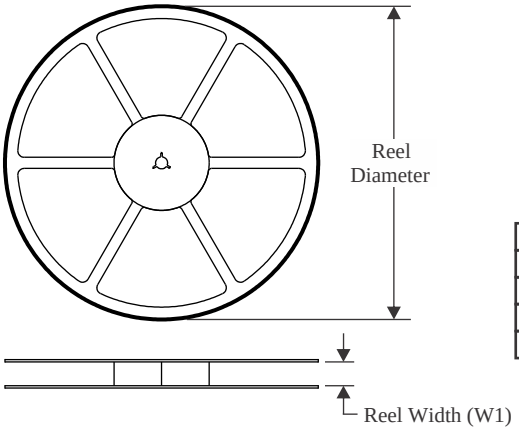

TAPE DIMENSIONS

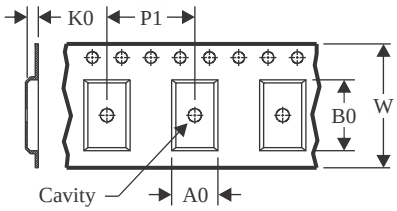

A0	Dimension designed to accommodate the component width
B0	Dimension designed to accommodate the component length
K0	Dimension designed to accommodate the component thickness
W	Overall width of the carrier tape
P1	Pitch between successive cavity centers

QUADRANT ASSIGNMENTS FOR PIN 1 ORIENTATION IN TAPE

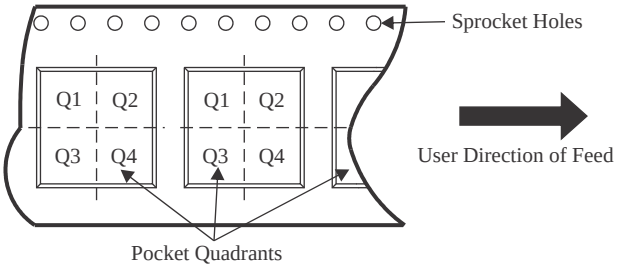

*All dimensions are nominal

Device	Package Type	Package Drawing	Pins	SPQ	Reel Diameter (mm)	Reel Width W1 (mm)	A0 (mm)	B0 (mm)	K0 (mm)	P1 (mm)	W (mm)	Pin1 Quadrant
MAX211CDWR	SOIC	DW	28	1000	330.0	32.4	11.35	18.67	3.1	16.0	32.0	Q1
MAX211IDBR	SSOP	DB	28	2000	330.0	16.4	8.45	10.55	2.5	12.0	16.2	Q1
MAX211IDBR	SSOP	DB	28	2000	330.0	16.4	8.45	10.55	2.5	12.0	16.2	Q1
MAX211IDWR	SOIC	DW	28	1000	330.0	32.4	11.35	18.67	3.1	16.0	32.0	Q1

TAPE AND REEL BOX DIMENSIONS

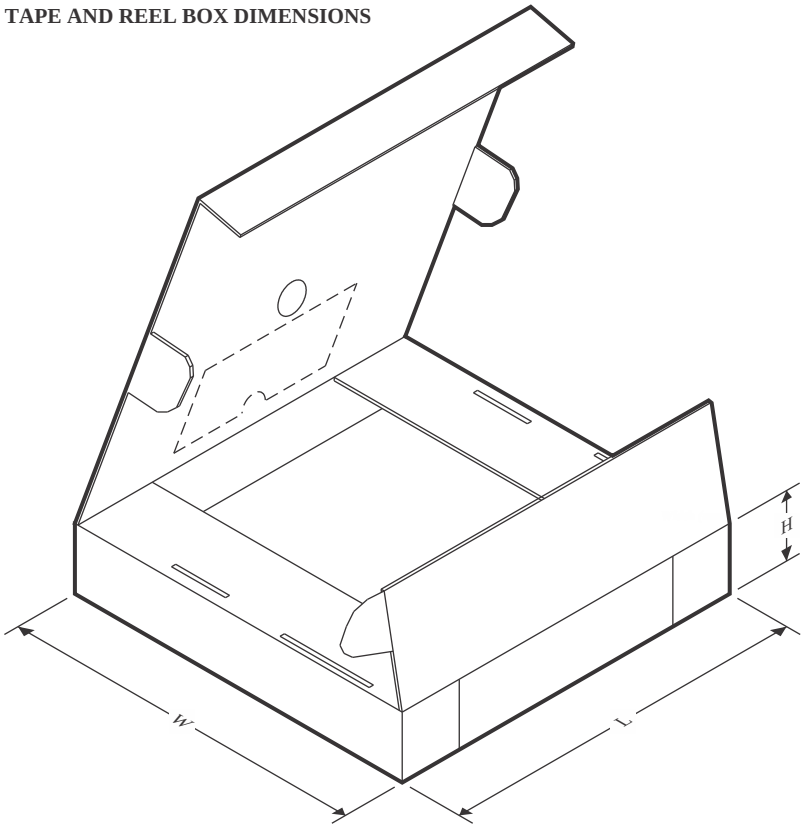

*All dimensions are nominal

Device	Package Type	Package Drawing	Pins	SPQ	Length (mm)	Width (mm)	Height (mm)
MAX211CDWR	SOIC	DW	28	1000	350.0	350.0	66.0
MAX211IDBR	SSOP	DB	28	2000	356.0	356.0	35.0
MAX211IDBR	SSOP	DB	28	2000	353.0	353.0	32.0
MAX211IDWR	SOIC	DW	28	1000	350.0	350.0	66.0

PACKAGE OUTLINE

DB0028A

SSOP - 2 mm max height

SMALL OUTLINE PACKAGE

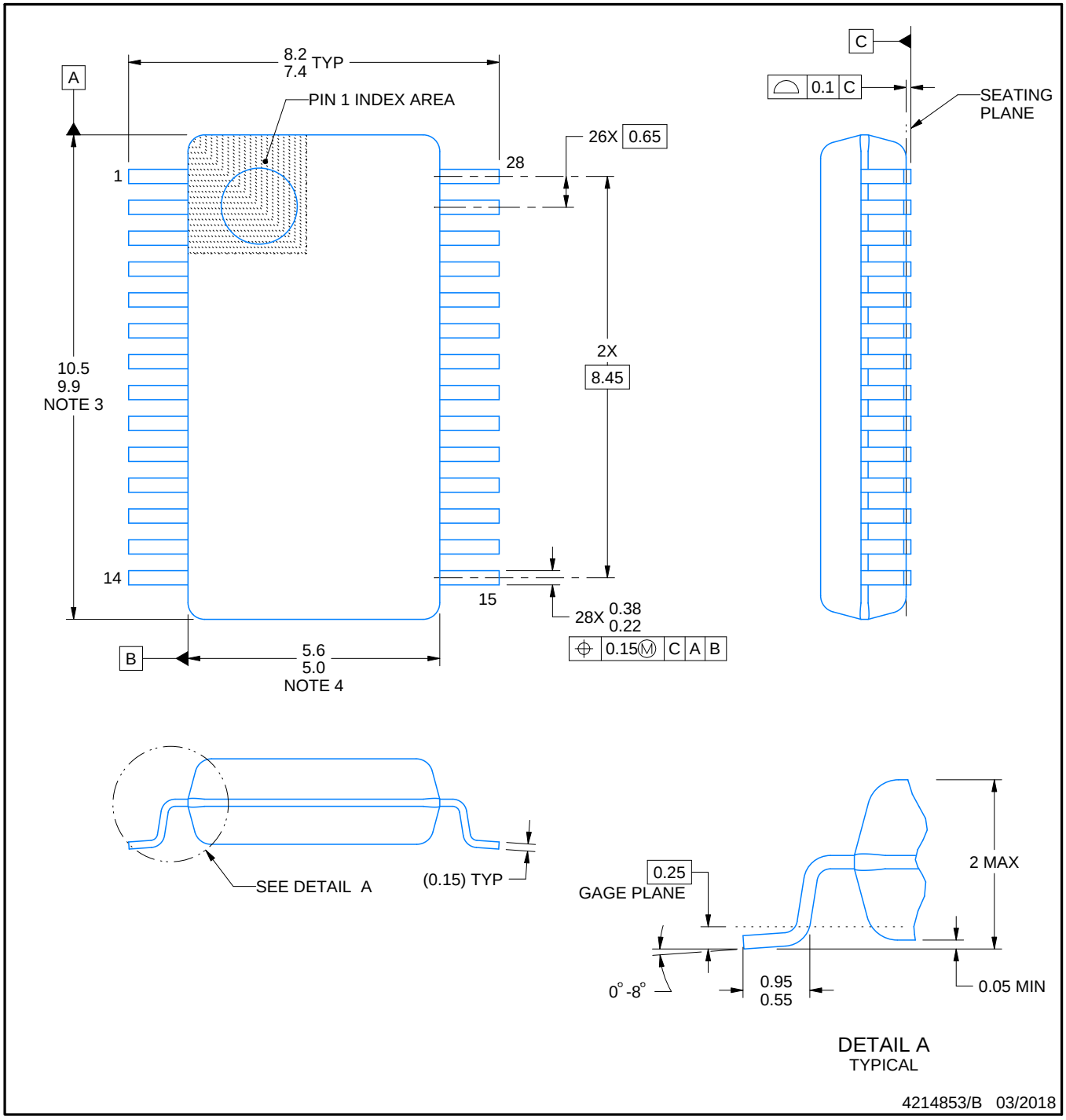

NOTES:

1. All linear dimensions are in millimeters. Any dimensions in parenthesis are for reference only. Dimensioning and tolerancing per ASME Y14.5M.
2. This drawing is subject to change without notice.
3. This dimension does not include mold flash, protrusions, or gate burrs. Mold flash, protrusions, or gate burrs shall not exceed 0.15 mm per side.
4. This dimension does not include interlead flash. Interlead flash shall not exceed 0.25 mm per side.
5. Reference JEDEC registration MO-150.

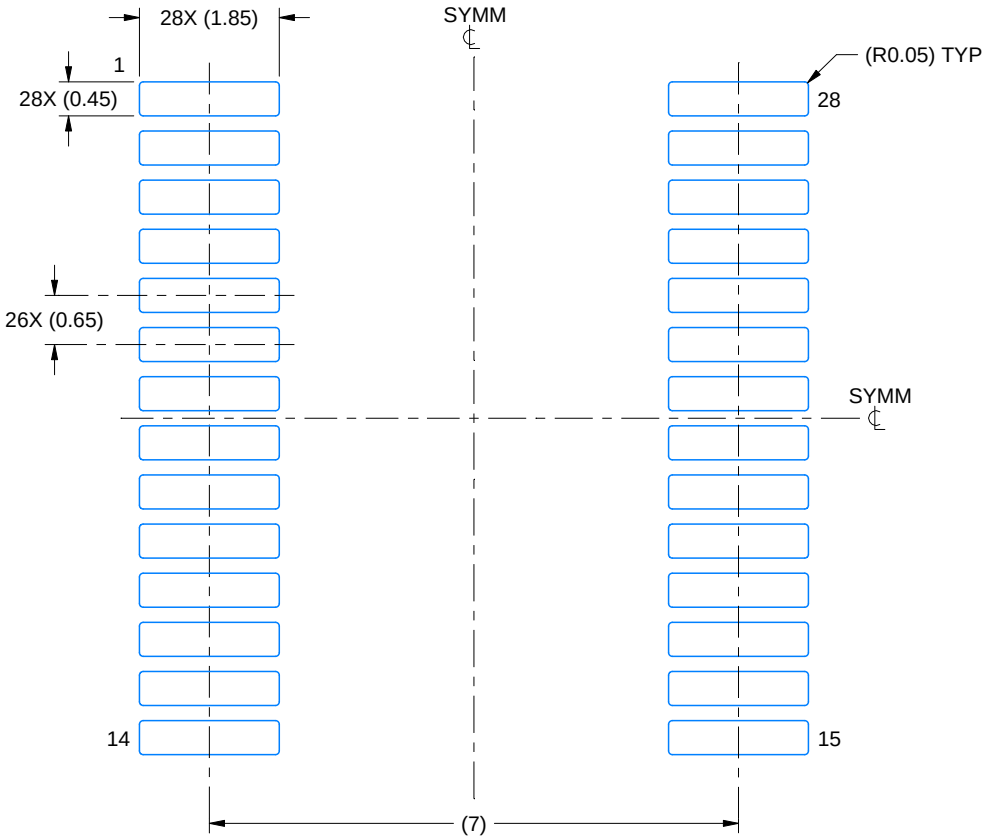

LAND PATTERN EXAMPLE
EXPOSED METAL SHOWN
SCALE: 10X

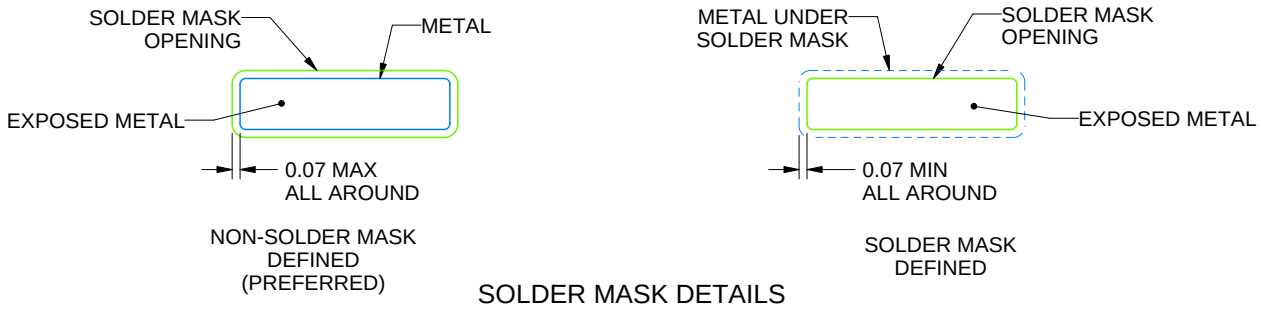

SOLDER MASK DETAILS

4214853/B 03/2018

NOTES: (continued)

6. Publication IPC-7351 may have alternate designs.
7. Solder mask tolerances between and around signal pads can vary based on board fabrication site.

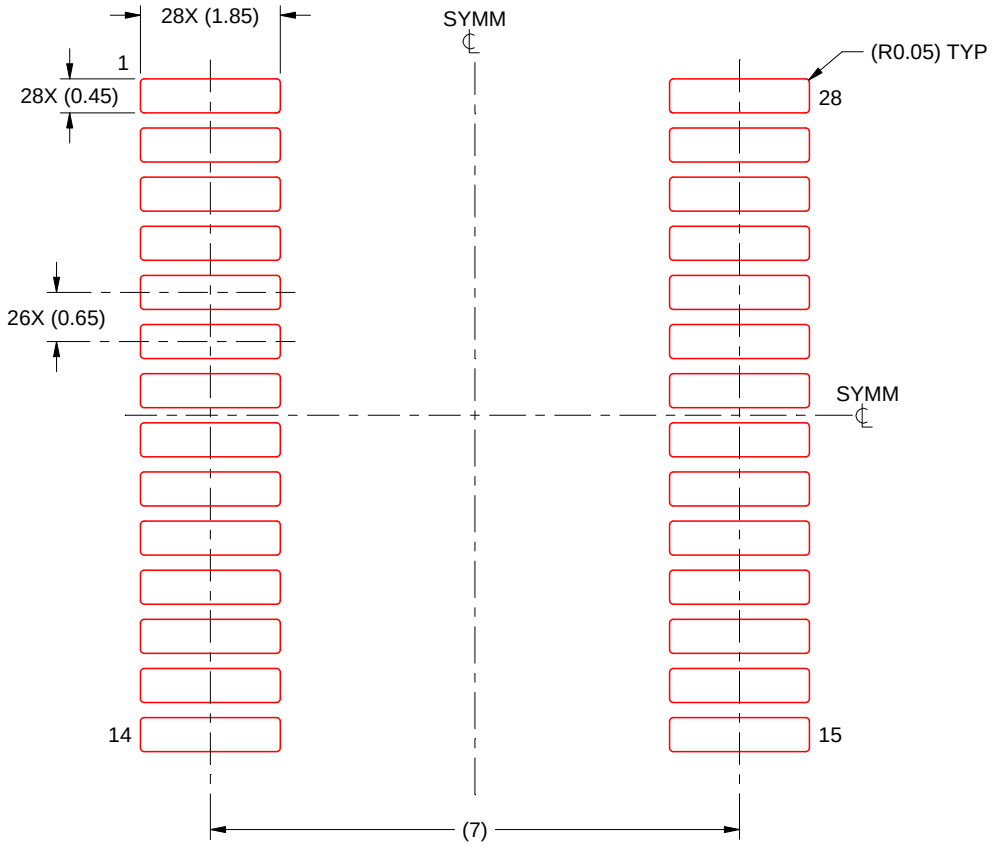

SOLDER PASTE EXAMPLE
BASED ON 0.125 mm THICK STENCIL
SCALE: 10X

4214853/B 03/2018

NOTES: (continued)

8. Laser cutting apertures with trapezoidal walls and rounded corners may offer better paste release. IPC-7525 may have alternate design recommendations.
9. Board assembly site may have different recommendations for stencil design.

DW (R–PDSO–G28) PLASTIC SMALL OUTLINE

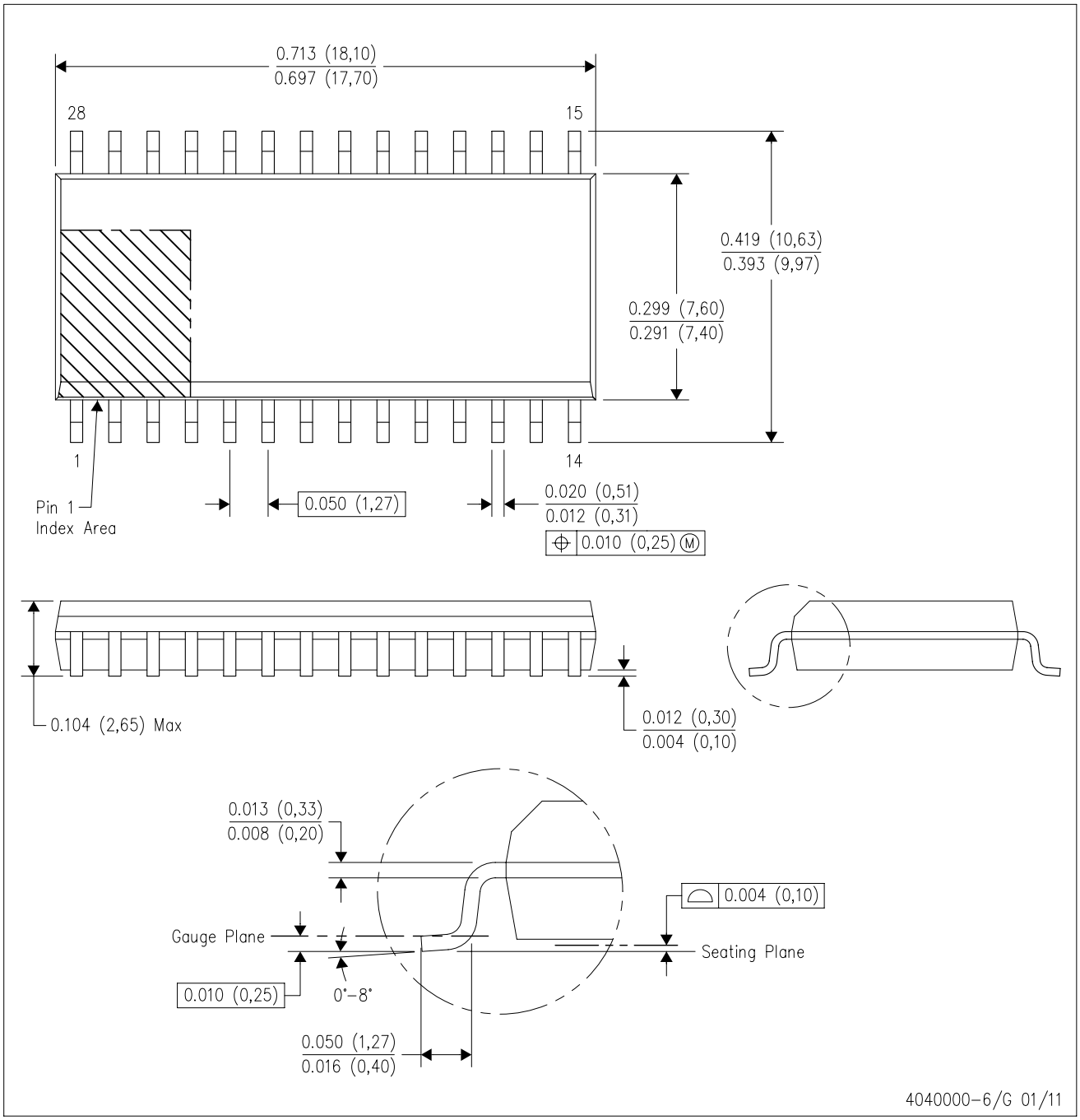

NOTES:
A. All linear dimensions are in inches (millimeters). Dimensioning and tolerancing per ASME Y14.5M–1994.
B. This drawing is subject to change without notice.
C. Body dimensions do not include mold flash or protrusion not to exceed 0.006 (0,15).
D. Falls within JEDEC MS–013 variation AE.

IMPORTANT NOTICE AND DISCLAIMER

TI PROVIDES TECHNICAL AND RELIABILITY DATA (INCLUDING DATA SHEETS), DESIGN RESOURCES (INCLUDING REFERENCE DESIGNS), APPLICATION OR OTHER DESIGN ADVICE, WEB TOOLS, SAFETY INFORMATION, AND OTHER RESOURCES “AS IS” AND WITH ALL FAULTS, AND DISCLAIMS ALL WARRANTIES, EXPRESS AND IMPLIED, INCLUDING WITHOUT LIMITATION ANY IMPLIED WARRANTIES OF MERCHANTABILITY, FITNESS FOR A PARTICULAR PURPOSE OR NON-INFRINGEMENT OF THIRD PARTY INTELLECTUAL PROPERTY RIGHTS.

These resources are intended for skilled developers designing with TI products. You are solely responsible for (1) selecting the appropriate TI products for your application, (2) designing, validating and testing your application, and (3) ensuring your application meets applicable standards, and any other safety, security, regulatory or other requirements.

These resources are subject to change without notice. TI grants you permission to use these resources only for development of an application that uses the TI products described in the resource. Other reproduction and display of these resources is prohibited. No license is granted to any other TI intellectual property right or to any third party intellectual property right. TI disclaims responsibility for, and you will fully indemnify TI and its representatives against, any claims, damages, costs, losses, and liabilities arising out of your use of these resources.

TI’s products are provided subject to TI’s Terms of Sale or other applicable terms available either on ti.com or provided in conjunction with such TI products. TI’s provision of these resources does not expand or otherwise alter TI’s applicable warranties or warranty disclaimers for TI products.

TI objects to and rejects any additional or different terms you may have proposed.

Mailing Address: Texas Instruments, Post Office Box 655303, Dallas, Texas 75265
Copyright © 2025, Texas Instruments Incorporated