- **Members of the Texas Instruments *Widebus*™ Family**
- **State-of-the-Art *EPIC*-II*B*™ BiCMOS Design Significantly Reduces Power Dissipation**
- **Latch-Up Performance Exceeds 500 mA Per JEDEC Standard JESD-17**
- **Typical V_{OLP} (Output Ground Bounce) < 1 V at V_{CC} = 5 V, T_A = 25°C**
- **Distributed V_{CC} and GND Pin Configuration Minimizes High-Speed Switching Noise**
- **Flow-Through Architecture Optimizes PCB Layout**
- **High-Drive Outputs (–32-mA I_{OH}, 64-mA I_{OL})**
- **Package Options Include Plastic 300-mil Shrink Small-Outline (DL) and Thin Shrink Small-Outline (DGG) Packages and 380-mil Fine-Pitch Ceramic Flat (WD) Package Using 25-mil Center-to-Center Spacings**

SN54ABT16470 . . . WD PACKAGE
SN74ABT16470 . . . DGG OR DL PACKAGE
(TOP VIEW)

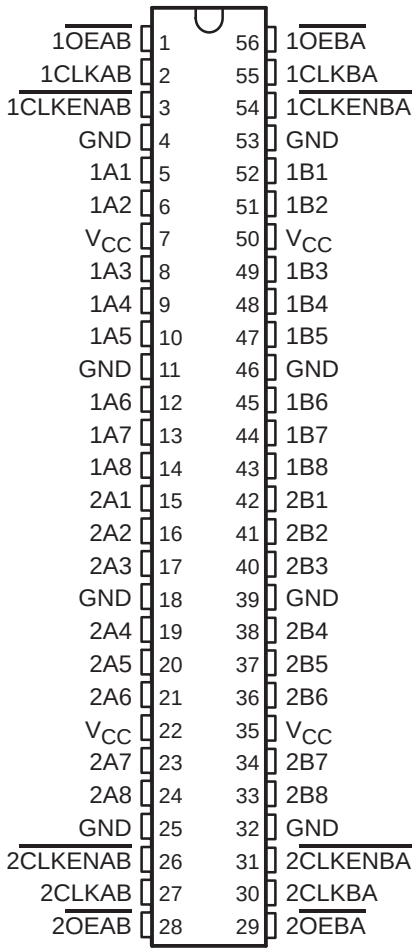

description

The ’ABT16470 are 16-bit registered transceivers that contain two sets of D-type flip-flops for temporary storage of data flowing in either direction. The ’ABT16470 can be used as two 8-bit transceivers or one 16-bit transceiver. Separate clock (CLKAB or CLKBA) and output-enable ($\overline{OEAB}$ or $\overline{OEBA}$) inputs are provided for each register to permit independent control in either direction of data flow.

To avoid false clocking of the flip-flops, clock enable ($\overline{CLKEN}$) should not be switched from high to low while CLK is high.

To ensure the high-impedance state during power up or power down, $\overline{OE}$ should be tied to V_{CC} through a pullup resistor; the minimum value of the resistor is determined by the current-sinking capability of the driver.

The SN54ABT16470 is characterized for operation over the full military temperature range of –55°C to 125°C. The SN74ABT16470 is characterized for operation from –40°C to 85°C.

Please be aware that an important notice concerning availability, standard warranty, and use in critical applications of Texas Instruments semiconductor products and disclaimers thereto appears at the end of this data sheet.

Widebus and EPIC-IIB are trademarks of Texas Instruments Incorporated.

UNLESS OTHERWISE NOTED this document contains PRODUCTION DATA information current as of publication date. Products conform to specifications per the terms of Texas Instruments standard warranty. Production processing does not necessarily include testing of all parameters.

Copyright © 1997, Texas Instruments Incorporated

FUNCTION TABLE†

INPUTS				OUTPUT B
$\overline{\text{CLKENAB}}$	CLKAB	$\overline{\text{OEAB}}$	A	
H	X	X	X	Z
X	X	H	X	Z
L	L	L	X	B_0‡
L	↑	L	L	L
L	↑	L	H	H

† A-to-B data flow is shown: B-to-A flow is similar but uses $\overline{\text{CLKENBA}}$, CLKBA, and $\overline{\text{OEBA}}$.

‡ Output level before the indicated steady-state input conditions were established

logic symbol†

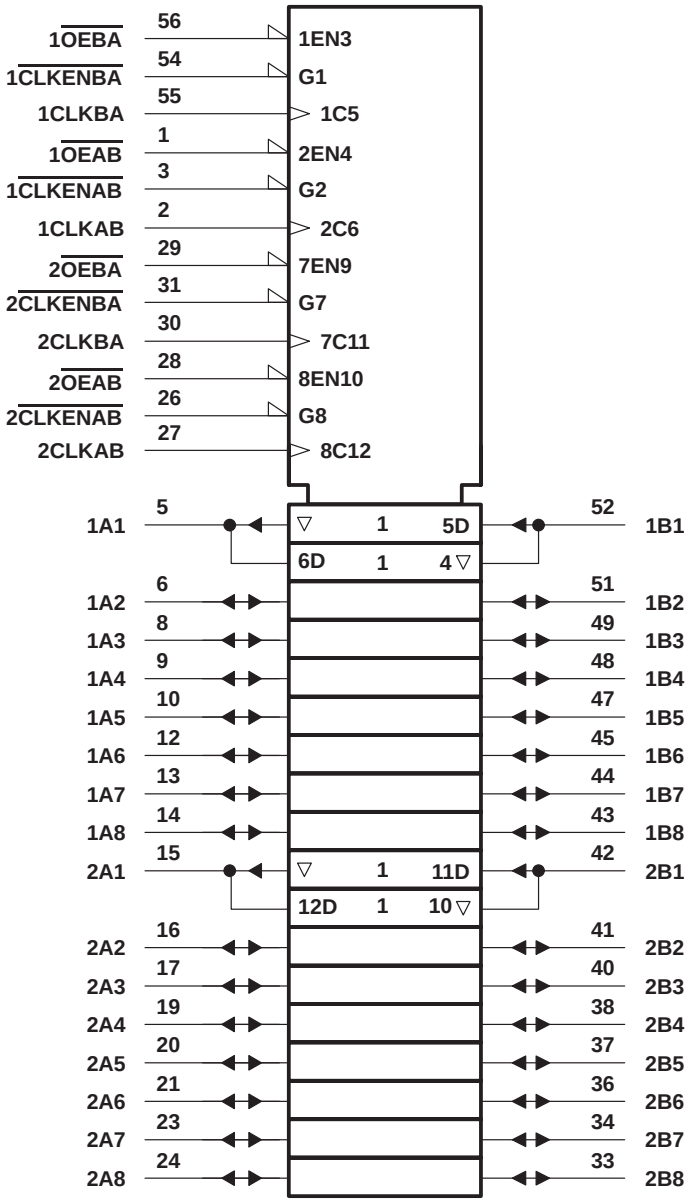

† This symbol is in accordance with ANSI/IEEE Std 91-1984 and IEC Publication 617-12.

logic diagram (positive logic)

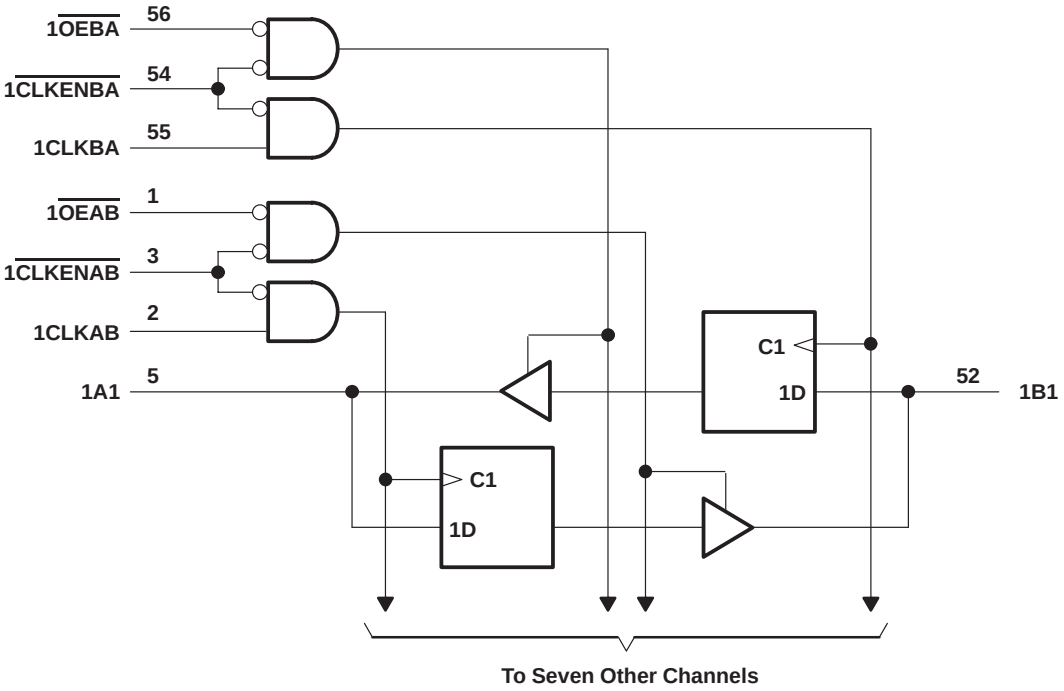

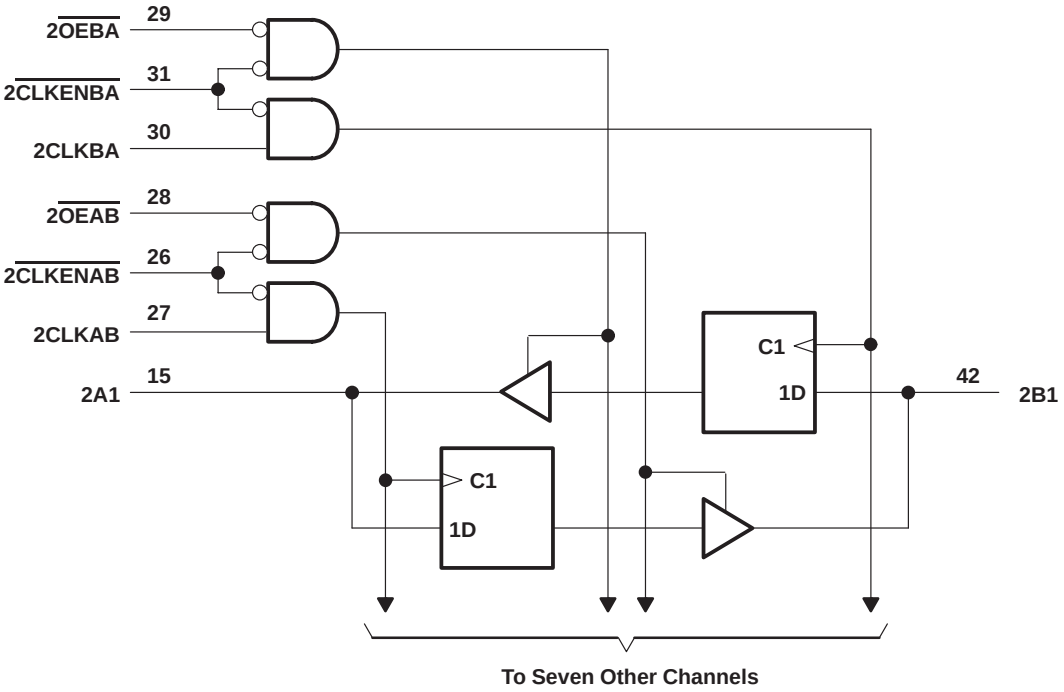

absolute maximum ratings over operating free-air temperature range (unless otherwise noted)†

Supply voltage range, V_{CC} . . . . . –0.5 V to 7 V
Input voltage range, V_I (except I/O ports) (see Note 1) . . . . . –0.5 V to 7 V
Voltage range applied to any output in the high or power-off state, V_O . . . . . –0.5 V to 5.5 V
Current into any output in the low state, I_O: SN54ABT16470 . . . . . 96 mA
SN74ABT16470 . . . . . 128 mA
Input clamp current, I_{IK} (V_I < 0) . . . . . –18 mA
Output clamp current, I_{OK} (V_O < 0) . . . . . –50 mA
Package thermal impedance, θ_{JA} (see Note 2): DGG package . . . . . 81°C/W
DL package . . . . . 74°C/W
Storage temperature range, T_{stg} . . . . . –65°C to 150°C

† Stresses beyond those listed under “absolute maximum ratings” may cause permanent damage to the device. These are stress ratings only, and functional operation of the device at these or any other conditions beyond those indicated under “recommended operating conditions” is not implied. Exposure to absolute-maximum-rated conditions for extended periods may affect device reliability.

NOTES: 1. The input and output negative-voltage ratings may be exceeded if the input and output clamp-current ratings are observed.
2. The package thermal impedance is calculated in accordance with EIA/JEDEC Std JESD51.

recommended operating conditions (see Note 3)

			SN54ABT16470		SN74ABT16470		UNIT
			MIN	MAX	MIN	MAX	
V_{CC}	Supply voltage		4.5	5.5	4.5	5.5	V
V_{IH}	High-level input voltage		2		2		V
V_{IL}	Low-level input voltage			0.8		0.8	V
V_I	Input voltage		0	V_{CC}	0	V_{CC}	V
I_{OH}	High-level output current			–24		–32	mA
I_{OL}	Low-level output current			48		64	mA
$\Delta t/\Delta v$	Input transition rise or fall rate	Outputs enabled		10		10	ns/V
T_A	Operating free-air temperature		–55	125	–40	85	°C

NOTE 3: Unused pins (input or I/O) must be held high or low to prevent them from floating.

PRODUCT PREVIEW

PRODUCT PREVIEW information concerns products in the formative or design phase of development. Characteristic data and other specifications are design goals. Texas Instruments reserves the right to change or discontinue these products without notice.

electrical characteristics over recommended operating free-air temperature range (unless otherwise noted)

PARAMETER		TEST CONDITIONS		T_A = 25°C			SN54ABT16470		SN74ABT16470		UNIT
				MIN	TYP†	MAX	MIN	MAX	MIN	MAX	
V_{IK}		V_{CC} = 4.5 V,	I_I = –18 mA			–1.2		–1.2		–1.2	V
V_{OH}		V_{CC} = 4.5 V,	I_{OH} = –3 mA	2.5			2.5		2.5		V
		V_{CC} = 5 V,	I_{OH} = –3 mA	3			3		3		
		V_{CC} = 4.5 V	I_{OH} = –24 mA	2			2				
			I_{OH} = –32 mA	2*					2		
V_{OL}		V_{CC} = 4.5 V	I_{OL} = 48 mA			0.55		0.55			V
			I_{OL} = 64 mA			0.55*				0.55	
V_{hys}					100						mV
I_I	Control inputs	V_{CC} = 5.5 V,	V_I = V_{CC} or GND			±1		±1		±1	µA
	A or B ports					±100		±100		±100	
I_{OZH}‡		V_{CC} = 5.5 V,	V_O = 2.7 V			50		50		50	µA
I_{OZL}‡		V_{CC} = 5.5 V,	V_O = 0.5 V			–50		–50		–50	µA
I_{off}		V_{CC} = 0,	V_I or V_O ≤ 4.5 V			±100				±100	µA
I_{CEX}		V_{CC} = 5.5 V, V_O = 5.5 V	Outputs high			50		50		50	µA
I_O§		V_{CC} = 5.5 V,	V_O = 2.5 V	–50	–100	–200	–50	–200	–50	–200	mA
I_{CC}	A or B ports	V_{CC} = 5.5 V, I_O = 0, V_I = V_{CC} or GND	Outputs high			2		2		2	mA
			Outputs low			35		35		35	
			Outputs disabled			2		2		2	
ΔI_{CC}¶		V_{CC} = 5.5 V, One input at 3.4 V, Other inputs at V_{CC} or GND				0.5		0.5		0.5	mA
C_i	Control inputs	V_I = 2.5 V or 0.5 V			3						pF
C_{io}	A or B ports	V_O = 2.5 V or 0.5 V			8.5						pF

* On products compliant to MIL-PRF-38535, this parameter does not apply.
† All typical values are at V_{CC} = 5 V.
‡ The parameters I_{OZH} and I_{OZL} include the input leakage current.
§ Not more than one output should be tested at a time, and the duration of the test should not exceed one second.
¶ This is the increase in supply current for each input that is at the specified TTL voltage level rather than V_{CC} or GND.

timing requirements over recommended ranges of supply voltage and operating free-air temperature (unless otherwise noted) (see Figure 1)

		V_{CC} = 5 V, T_A = 25°C		SN54ABT16470		SN74ABT16470		UNIT
		MIN	MAX	MIN	MAX	MIN	MAX	
f_{clock}	Clock frequency	0	150	0	150	0	150	MHz
t_w#	Pulse duration, CLKAB or CLKBA high or low	3.3		3.3		3.3		ns
t_{su}	Setup time, data before CLKAB↑ or CLKBA↑	4		4		4		ns
t_h	Hold time, data after CLKAB↑ or CLKBA↑	1		1		1		ns

This parameter is characterized, but not production tested.

PRODUCT PREVIEW

PRODUCT PREVIEW information concerns products in the formative or design phase of development. Characteristic data and other specifications are design goals. Texas Instruments reserves the right to change or discontinue these products without notice.

switching characteristics over recommended ranges of supply voltage and operating free-air temperature, C_L = 50 pF (unless otherwise noted) (see Figure 1)

PARAMETER	FROM (INPUT)	TO (OUTPUT)	V_{CC} = 5 V, T_A = 25°C			SN54ABT16470		SN74ABT16470		UNIT
			MIN	TYP	MAX	MIN	MAX	MIN	MAX	
f_{max}			150			150		150		MHz
t_{PLH}	CLK	A or B	1.4	3.1	4.8	1.4	5.1	1.4	4.9	ns
t_{PHL}			1.3	3.2	4.6	1.3	5.1	1.3	4.9	
t_{PZH}	$\overline{OE}$	A or B	1	3.1	4.3	1	5	1	4.9	ns
t_{PZL}			1.2	3.6	5.8	1.2	6.9	1.2	6.8	
t_{PHZ}	$\overline{OE}$	A or B	1.9	3.7	4.9	1.9	6	1.9	5.5	ns
t_{PLZ}			1.6	3.3	4.8	1.6	5.4	1.6	5.3	
t_{PZH}	$\overline{CLKEN}$	A or B	1	3.4	4.6	1	5.8	1	5.7	ns
t_{PZL}			1.2	3.9	6	1.2	7.3	1.2	7.2	
t_{PHZ}	$\overline{CLKEN}$	A or B	1.7	3.9	5.2	1.7	6.2	1.7	5.8	ns
t_{PLZ}			1.5	3.6	5.3	1.5	5.5	1.5	5.4	

PRODUCT PREVIEW

PRODUCT PREVIEW information concerns products in the formative or design phase of development. Characteristic data and other specifications are design goals. Texas Instruments reserves the right to change or discontinue these products without notice.

PARAMETER MEASUREMENT INFORMATION

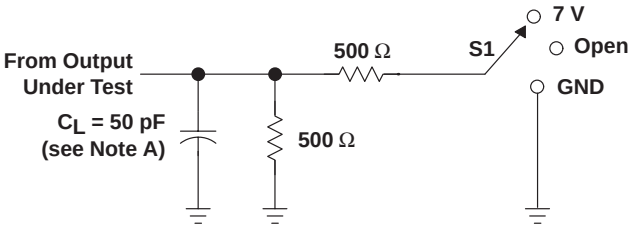

LOAD CIRCUIT

TEST	S1
t_{PLH}/t_{PHL}	Open
t_{PLZ}/t_{PZL}	7 V
t_{PHZ}/t_{PZH}	Open

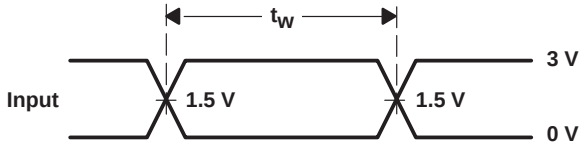

VOLTAGE WAVEFORMS
PULSE DURATION

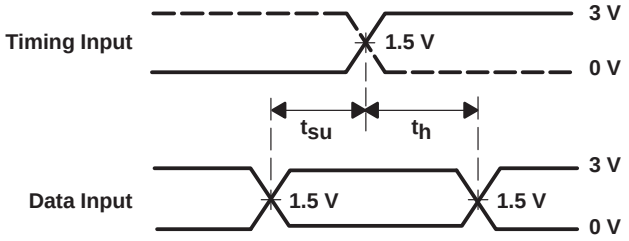

VOLTAGE WAVEFORMS
SETUP AND HOLD TIMES

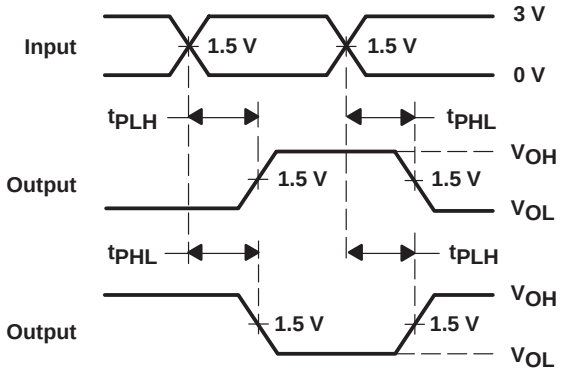

VOLTAGE WAVEFORMS
PROPAGATION DELAY TIMES
INVERTING AND NONINVERTING OUTPUTS

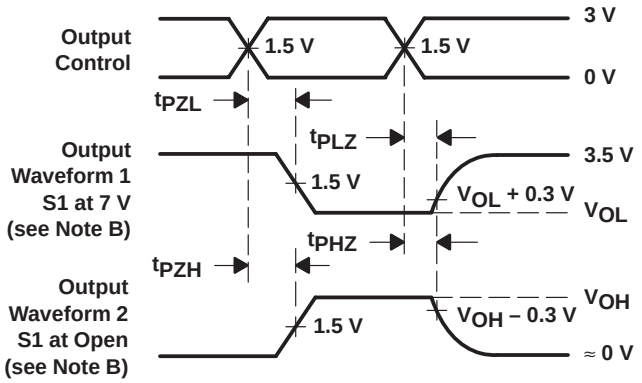

VOLTAGE WAVEFORMS
ENABLE AND DISABLE TIMES
LOW- AND HIGH-LEVEL ENABLING

NOTES: A. C_L includes probe and jig capacitance.
B. Waveform 1 is for an output with internal conditions such that the output is low except when disabled by the output control. Waveform 2 is for an output with internal conditions such that the output is high except when disabled by the output control.
C. All input pulses are supplied by generators having the following characteristics: PRR ≤ 10 MHz, Z_O = 50 Ω, t_r ≤ 2.5 ns, t_f ≤ 2.5 ns.
D. The outputs are measured one at a time with one transition per measurement.

Figure 1. Load Circuit and Voltage Waveforms

TAPE AND REEL INFORMATION

REEL DIMENSIONS

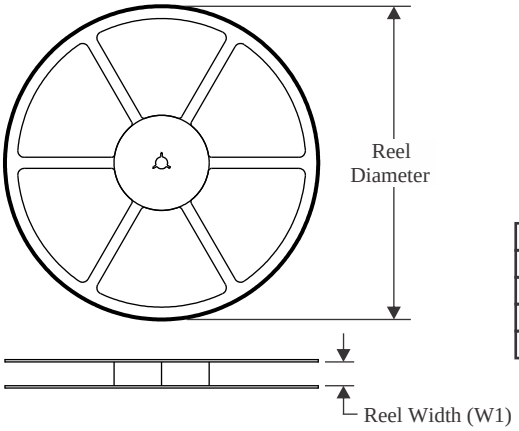

TAPE DIMENSIONS

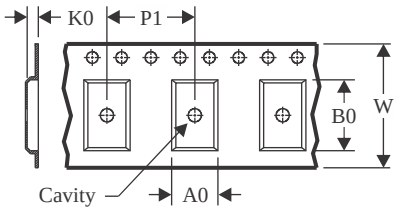

A0	Dimension designed to accommodate the component width
B0	Dimension designed to accommodate the component length
K0	Dimension designed to accommodate the component thickness
W	Overall width of the carrier tape
P1	Pitch between successive cavity centers

QUADRANT ASSIGNMENTS FOR PIN 1 ORIENTATION IN TAPE

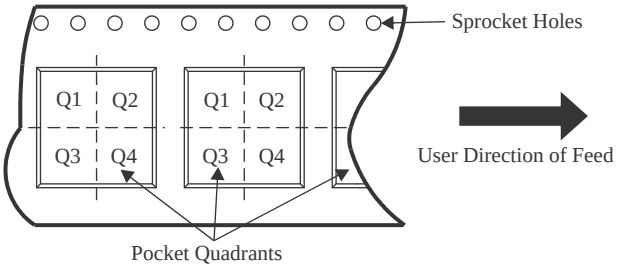

*All dimensions are nominal

Device	Package Type	Package Drawing	Pins	SPQ	Reel Diameter (mm)	Reel Width W1 (mm)	A0 (mm)	B0 (mm)	K0 (mm)	P1 (mm)	W (mm)	Pin1 Quadrant
SN74ABT16470DGGR	TSSOP	DGG	56	2000	330.0	24.4	8.6	15.6	1.8	12.0	24.0	Q1

TAPE AND REEL BOX DIMENSIONS

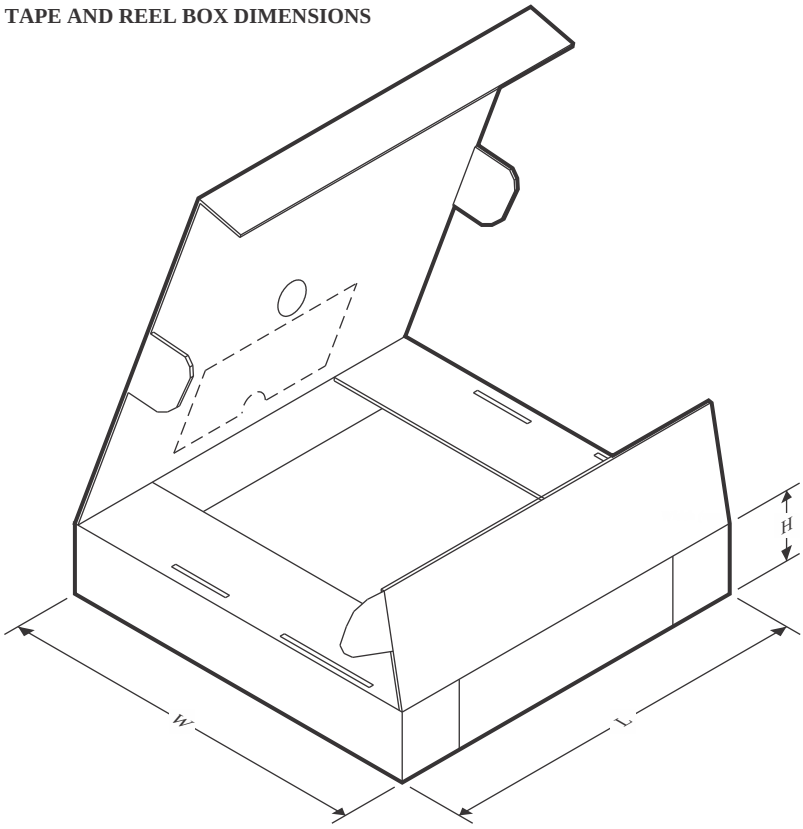

*All dimensions are nominal

Device	Package Type	Package Drawing	Pins	SPQ	Length (mm)	Width (mm)	Height (mm)
SN74ABT16470DGGR	TSSOP	DGG	56	2000	367.0	367.0	45.0

TUBE

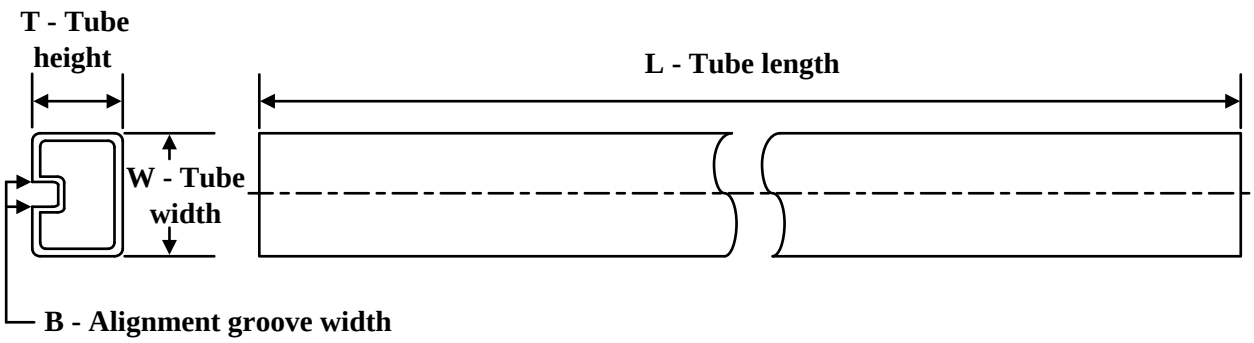

*All dimensions are nominal

Device	Package Name	Package Type	Pins	SPQ	L (mm)	W (mm)	T (µm)	B (mm)
SN74ABT16470DL	DL	SSOP	56	20	473.7	14.24	5110	7.87
SN74ABT16470DL.B	DL	SSOP	56	20	473.7	14.24	5110	7.87

IMPORTANT NOTICE AND DISCLAIMER

TI PROVIDES TECHNICAL AND RELIABILITY DATA (INCLUDING DATA SHEETS), DESIGN RESOURCES (INCLUDING REFERENCE DESIGNS), APPLICATION OR OTHER DESIGN ADVICE, WEB TOOLS, SAFETY INFORMATION, AND OTHER RESOURCES “AS IS” AND WITH ALL FAULTS, AND DISCLAIMS ALL WARRANTIES, EXPRESS AND IMPLIED, INCLUDING WITHOUT LIMITATION ANY IMPLIED WARRANTIES OF MERCHANTABILITY, FITNESS FOR A PARTICULAR PURPOSE OR NON-INFRINGEMENT OF THIRD PARTY INTELLECTUAL PROPERTY RIGHTS.

These resources are intended for skilled developers designing with TI products. You are solely responsible for (1) selecting the appropriate TI products for your application, (2) designing, validating and testing your application, and (3) ensuring your application meets applicable standards, and any other safety, security, regulatory or other requirements.

These resources are subject to change without notice. TI grants you permission to use these resources only for development of an application that uses the TI products described in the resource. Other reproduction and display of these resources is prohibited. No license is granted to any other TI intellectual property right or to any third party intellectual property right. TI disclaims responsibility for, and you will fully indemnify TI and its representatives against, any claims, damages, costs, losses, and liabilities arising out of your use of these resources.

TI’s products are provided subject to TI’s Terms of Sale or other applicable terms available either on ti.com or provided in conjunction with such TI products. TI’s provision of these resources does not expand or otherwise alter TI’s applicable warranties or warranty disclaimers for TI products.

TI objects to and rejects any additional or different terms you may have proposed.

Mailing Address: Texas Instruments, Post Office Box 655303, Dallas, Texas 75265
Copyright © 2025, Texas Instruments Incorporated