14-BIT, 400 MSPS, 2×/4× INTERPOLATING CommsDAC™ DIGITAL-TO-ANALOG CONVERTER

FEATURES

- **200-MSPS Maximum Input Data Rate**
- **400-MSPS Maximum Update Rate DAC**
- **76-dBc SFDR Over Full First Nyquist Zone With Single Tone Input Signal (F_{out} = 21 MHz)**
- **74-dBc ACPR W-CDMA at 15.36 MHz IF**
- **69-dBc ACPR W-CDMA at 30.72 MHz IF**
- **Selectable 2× or 4× Interpolation Filter**
  - **Linear Phase**
  - **0.05-dB Pass-Band Ripple**
  - **80-dB Stop-Band Attenuation**
  - **Stop-Band Transition 0.4−0.6 F_{data}**
  - **Interpolation Filters Configurable in Either Low-Pass or High-Pass Mode, Allows For Selection High-Order Images**
- **On-Chip 2×/4× PLL Clock Multiplier, PLL Bypass Mode**
- **Differential Scalable Current Outputs: 2 mA to 20 mA**
- **On-Chip 1.2-V Reference**
- **1.8-V Digital and 3.3-V Analog Supply Operation**
- **1.8/3.3-V CMOS Compatible Interface**
- **Power Dissipation: 435 mW at 400 MSPS**
- **Package: 48-Pin TQFP**

APPLICATIONS

- **Cellular Base Transceiver Station Transmit Channel**
  - **CDMA: W-CDMA, CDMA2000, IS-95**
  - **TDMA: GSM, IS-136, EDGE/UWC-136**
- **Test and Measurement: Arbitrary Waveform Generation**
- **Direct Digital Synthesis (DDS)**
- **Cable Modem Termination System**

DESCRIPTION

The DAC5674 is a 14-bit resolution, high-speed, digital-to-analog converter (DAC) with integrated 4× interpolation filter, onboard clock multiplier, and on-chip voltage reference. The device has been designed for high-speed digital data transmission in wired and wireless communication systems, high-frequency direct-digital synthesis (DDS) and waveform reconstruction in test and measurement applications.

The 4× interpolation filter is implemented as a cascade of two 2× interpolation filters, each of which can be configured for either low-pass or high-pass response. This enables the user to select one of the higher order images present at multiples of the input data rate clock while maintaining a low date input rate. The resulting high IF output frequency allows the user to omit the conventional first mixer in heterodyne transmitter architectures and directly up-convert to RF using only one mixer, thereby reducing system complexity and costs.

In 4× interpolation low-pass response mode, the DACs excellent spurious free dynamic range (SFDR) at intermediate frequencies located in the first Nyquist zone (up to 40 MHz) allows for multicarrier transmission in cellular base transceiver stations (BTS). The low-pass interpolation mode thereby relaxes image filter requirements by filtering out the images in the adjacent Nyquist zones.

The DAC5674 PLL clock multiplier controls all internal clocks for the digital filters and DAC core. The differential clock input and internal clock circuitry provides for optimum jitter performance. Sine wave clock input signal is supported. The PLL can be bypassed by an external clock running at the DAC core update rate. The clock divider of the PLL ensures that the digital filters operate at the correct clock frequencies.

Please be aware that an important notice concerning availability, standard warranty, and use in critical applications of Texas Instruments semiconductor products and disclaimers thereto appears at the end of this data sheet.

Excel is a trademark of Microsoft Corporation.
CommsDAC and PowerPAD are trademarks of Texas Instruments.
All other trademarks are the property of their respective owners.

PRODUCTION DATA information is current as of publication date. Products conform to specifications per the terms of Texas Instruments standard warranty. Production processing does not necessarily include testing of all parameters.

Copyright © 2005, Texas Instruments Incorporated

These devices have limited built-in ESD protection. The leads should be shorted together or the device placed in conductive foam during storage or handling to prevent electrostatic damage to the MOS gates.

The DAC5674 operates from an analog supply voltage of 3.3 V and a digital supply voltage of 1.8 V. The digital I/Os are 1.8-V and 3.3-V CMOS compatible. Power dissipation is 500 mW at maximum operating conditions. The DAC5674 provides a nominal full-scale differential current-output of 20 mA, supporting both single-ended and differential applications. The output current can be directly fed to the load with no additional external output buffer required. The device has been specifically designed for a differential transformer coupled output with a 50-Ω doubly terminated load. For a 20-mA full-scale output current, both a 4:1 impedance ratio (resulting in an output power of 4 dBm) and 1:1 impedance ratio transformer (−2-dBm output power) are supported. The latter configuration is preferred for optimum performance at high output frequencies and update rates.

An accurate on-chip 1.2-V temperature compensated band-gap reference and control amplifier allows the user to adjust the full-scale output current from 20 mA down to 2 mA. This provides 20-dB gain range control capabilities. Alternatively, an external reference voltage may be applied for maximum flexibility. The device features a SLEEP mode, which reduces the standby power to approximately 10 mW, thereby optimizing the power consumption for the system's need.

The DAC5674 is available in a 48-pin HTQFP PowerPAD™ plastic quad flatpack package. The device is characterized for operation over the industrial temperature range of −40°C to 85°C.

AVAILABLE OPTIONS

T_A	PACKAGED DEVICES
−40°C to 85°C	48-HTQFP PowerPAD Plastic Quad Flatpack
	DAC5674IPHP
	DAC5674IPHPR

ABSOLUTE MAXIMUM RATINGS

over operating free-air temperature range unless otherwise noted(1)

		UNIT
Supply voltage range	AVDD(2), CLKVDD(2), IOVDD(2), PLLVDD(2)	−0.5 V to 4 V
	DVDD(3)	−0.5 V to 2.3 V
Voltage between AGND, DGND, CLKGND, PLLGND, and IOGND		−0.5 V to 0.5 V
Supply voltage range	D[13..0](3), HP1, HP2, DIV0(3), DIV1(3), PLLLOCK(3), RESET(3), X4(3)	−0.5 V to IOVDD + 0.5 V
	IOUT1, IOUT2(2)	−1 V to AVDD + 0.5 V
	EXTIO(2), EXTLO(2), BIASJ(2), SLEEP(2), CLK(2), CLKC(2), LPF(2)	−0.5 V to AVDD + 0.5 V
Peak input current (any input)		20 mA
Peak total input current (all inputs)		−30 mA
Operating free-air temperature range, T_A: DAC5674I		−40°C to 85°C
Storage temperature range		−65°C to 150°C
Lead temperature 1,6 mm (1/16 inch) from the case for 10 seconds		260°C

(1) Stresses beyond those listed under "absolute maximum ratings" may cause permanent damage to the device. These are stress ratings only, and functional operation of the device at these or any other conditions beyond those indicated under "recommended operating conditions" is not implied. Exposure to absolute-maximum-rated conditions for extended periods may affect device reliability.
(2) Measured with respect to AGND.
(3) Measured with respect to DGND.

DC ELECTRICAL CHARACTERISTICS

over recommended operating free-air temperature range, AVDD = 3.3 V, CLKVDD = 3.3 V, PLLVDD = 3.3 V, IOVDD = 3.3 V, DVDD = 1.8 V, IOUTFS = 20 mA, R_{Set} = 1.91 kΩ, internal reference, unless otherwise noted

PARAMETER		TEST CONDITIONS	MIN	TYP	MAX	UNIT
RESOLUTION			14			Bits
DC ACCURACY(1)						
INL	Integral nonlinearity	1 LSB = $IOUT_{FS}/2^{14}$, T_{MIN} to T_{MAX}	−3.5		3.5	LSB
			−2.14e−4		2.14e−4	$IOUT_{FS}$
DNL	Differential nonlinearity		−2		2	LSB
			−1.22e−4		1.22e−4	$IOUT_{FS}$
Monotonicity			Montonic to 12 bits			
ANALOG OUTPUT						
	Offset error			0.02		FSR
	Gain error	Without internal reference		2.3		%FSR
		With internal reference		1.3		
	Minimum full-scale output current(2)			2		mA
	Maximum full-scale output current(2)			20		mA
	Output compliance range(3)	$IOUT_{FS}$ = 20 mA	−1		1.25	V
	Output resistance			300		kΩ
	Output capacitance			5		pF
REFERENCE OUTPUT						
	Reference voltage		1.14	1.2	1.26	V
	Reference output current(4)			100		nA
REFERENCE INPUT						
V_{EXTIO}	Input voltage range		0.1		1.25	V
	Input resistance			1		MΩ
	Small signal bandwidth			1.4		MHz
	Input capacitance			100		pF
TEMPERATURE COEFFICIENTS						
	Offset drift			0		ppm of FSR/°C
	Gain drift	Without internal reference		±50		ppm of FSR/°C
		With internal reference		±100		ppm of FSR/°C
	Reference voltage drift			±50		ppm/°C
POWER SUPPLY						
AVDD	Analog supply voltage		3	3.3	3.6	V
DVDD	Digital supply voltage		1.65	1.8	1.95	V
CLKVDD	Clock supply voltage		3	3.3	3.6	V
IOVDD	I/O supply voltage		1.65		3.6	V
PLLVDD	PLL supply voltage		3	3.3	3.6	V
I_{AVDD}	Analog supply current	Including output current through the load resistor, AVDD = 3.3 V, DVDD = 1.8 V, 4× interpolation, PLL on, 9-MHz IF, 400 MSPS		41	55	mA

Specifications subject to change without notice.

(1) Measured differentially across IOUT1 and IOUT2 into 50 Ω.

(2) Nominal full-scale current, IOUTFS, equals 32× the IBIAS current.

(3) The lower limit of the output compliance is determined by the CMOS process. Exceeding this limit may result in transistor breakdown, resulting in reduced reliability of the DAC5674 device. The upper limit of the output compliance is determined by the load resistors and full-scale output current. Exceeding the upper limit adversely affects distortion performance and integral nonlinearity.

(4) Use an external buffer amplifier with high impedance input to drive any external load.

DC ELECTRICAL CHARACTERISTICS (CONTINUED)

over recommended operating free-air temperature range, AVDD = 3.3 V, CLKVDD = 3.3 V, PLLVDD = 3.3 V, IOVDD = 3.3 V, DVDD = 1.8 V, IOUTFS = 20 mA, R_{set} = 1.91 kΩ, internal reference, unless otherwise noted

PARAMETER		TEST CONDITIONS	MIN	TYP	MAX	UNIT
POWER SUPPLY (CONTINUED)						
I_{DVDD}	Digital supply current	AVDD = 3.3 V, DVDD = 1.8 V, 4× interpolation, PLL on, 9-MHz IF, 400 MSPS		107	140	mA
$I_{SLEEP3.3}$	Sleep mode	Sleep mode, supply current 3.3 V		6	12	mA
$I_{SLEEP1.8}$	Sleep mode	Sleep mode, supply current 1.8 V		0.5	3	mA
I_{PLLVDD}	PLL supply current(1)	F_{data} = 100 MSPS, F_{update} = 400 MSPS, DIV[1:0] = '00', AVDD = 3.3 V, DVDD = 1.8 V, 4× interpolation, PLL on, 9-MHz IF, 400 MSPS		23	35	mA
I_{IOVDD}	Buffer supply current	AVDD = 3.3 V, DVDD = 1.8 V, 4× interpolation, PLL on, 9-MHz IF, 400 MSPS		4	10	mA
I_{CLKVDD}	Clock supply current(1)	AVDD = 3.3 V, DVDD = 1.8 V, 4× interpolation, PLL on, 9-MHz IF, 400 MSPS		6	10	mA
P_D	Power dissipation	AVDD = 3.3 V, DVDD = 1.8 V, 4× interpolation, PLL on, 9-MHz IF, 400 MSPS		435	550	mW
APSRR	Power supply rejection ratio		−0.2		0.2	%FSR/V
DPSRR			−0.2		0.2	
Operating range			−40		85	°C

Specifications subject to change without notice.
(1) PLL enabled

AC ELECTRICAL CHARACTERISTICS

over recommended operating free-air temperature range, AVDD = 3.3 V, CLKVDD = 3.3 V, PLLVDD = 3.3 V, IOVDD = 1.8 V, DVDD = 1.8 V, IOUTFS = 20 mA, differential transformer coupled output, 50-Ω doubly terminated load (unless otherwise noted)

PARAMETER		TEST CONDITIONS	MIN	TYP	MAX	UNIT
ANALOG OUTPUT						
f_{CLK}	Maximum output update rate		400			MSPS
$t_{s(DAC)}$	Output settling time to 0.1%	Midscale transition		20		ns
$t_{r(IOUT)}$	Output rise time 10% to 90%(1)			1.4		ns
$t_{f(IOUT)}$	Output fall time 90% to 10%(1)			1.5		ns
	Output noise	$IOUT_{FS}$ = 20 mA		55		pA/√HZ
		$IOUT_{FS}$ = 2 mA		30		
AC LINEARITY 1:1 IMPEDANCE RATIO TRANSFORMER (ALL AC MEASUREMENTS PLLVDD = 0 V)						
SFDR	Spurious free dynamic range (First Nyquist zone < f_{DATA}/2) X4 LL-mode	f_{DATA} = 52 MSPS, f_{OUT} = 14 MHz, T_A = 25°C		85		dBc
		f_{DATA} = 100 MSPS, f_{OUT} = 21 MHz, T_{MIN} to T_{MAX}		76		
		f_{DATA} = 100 MSPS, f_{OUT} = 41 MHz, T_{MIN} to T_{MAX}		71		
SNR	Signal-to-noise ratio (First Nyquist zone < f_{DATA}/2) X4 LL-mode	f_{DATA} = 78 MSPS, f_{OUT} = 20 MHz, T_{MIN} to T_{MAX}		71		dB
		f_{DATA} = 100 MSPS, f_{OUT} = 20 MHz, T_{MIN} to T_{MAX}		70		
ACPR	Adjacent channel power ratio W-CDMA signal with 3.84-MHz BW 5-MHz channel spacing	f_{DATA} = 61.44 MSPS, IF = 15.360 MHz, X4 LL-mode		74		dB
		f_{DATA} = 122.88 MSPS, IF = 30.72 MHz, X2 L-mode		69		
IMD3	Third-order, two-tone intermodulation (each tone at −6 dBFS)	f_{DATA} = 61.44 MSPS, f_{OUT} = 45.4 and 46.4 MHz, X4 HL-mode		68		dBc
		f_{DATA} = 61.44 MSPS, f_{OUT} = 15.1 and 16.1 MHz, X4 LL-mode		82		
IMD	Four-tone Intermodulation to Nyquist (each tone at –12 dBFS)	f_{DATA} = 78 MSPS f_{OUT} = 15.6 MHz, 15.8 MHz, 16.2 MHz, 16.4 MHz, X4 LL-mode		76		dBc
		f_{DATA} = 52 MSPS f_{OUT} = 68.8 MHz, 69.6 MHz, 71.2 MHz, 72 MHz, X4 HH-mode		64		

(1) Measured single-ended into 50-Ω load.

ELECTRICAL CHARACTERISTICS

over recommended operating free-air temperature range, AVDD = 3.3 V, CLKVDD = 3.3 V, PLLVDD = 3.3 V, IOVDD = 3.3 V, DVDD = 1.8 V, IOUTFS = 20 mA, differential transformer coupled output, 50-Ω doubly terminated load (unless otherwise noted)

DIGITAL SPECIFICATIONS						
PARAMETER		TEST CONDITIONS	MIN	TYP	MAX	UNIT
CMOS INTERFACE						
V_{IH}	High-level input voltage for SLEEP and EXTLO		0.7 AV_{DD}			V
V_{IL}	Low-level input voltage for SLEEP and EXTLO		0		0.3 AV_{DD}	V
V_{IH}	High-level input voltage other digital inputs		0.7 IOV_{DD}			V
V_{IL}	Low-level input voltage other digital inputs		0		0.3 IOV_{DD}	V
I_{IH}	High-level input current		10		30	µA
I_{IL}	Low-level input current		−1		10	µA
	Input capacitance		1		5	pF
TIMING INTERNAL CLOCK MODE						
t_{SU}	Input setup time		0.6			ns
t_H	Input hold time		0.6			ns
t_{LPH}	Input latch pulse high time			2		ns
t_{lat_2x}	Data in to DAC out latency − 2× interpolation			26		clk
t_{lat_4x}	Data in to DAC out latency − 4× interpolation			35		clk
TIMING − EXTERNAL CLOCK MODE						
t_{su}	Input setup time		5			ns
t_h	Input hold time		−1.75			ns
t_{lph}	Input latch pulse high time			2		ns
t_{d_clk}	Clock delay time			3.6		ns
t_{lat_2x}	Data in to DAC out latency − 2× interpolation			26		clk
t_{lat_4x}	Data in to DAC out latency − 4× interpolation			35		clk
PLL						
	Input data rate supported		5		200	MSPS
	Phase noise	At 600-kHz offset		−124		dBc/Hz
		At 6-MHz offset		−134		
DIGITAL FILTER SPECIFICATIONS						
f_{DATA}	Input data rate				200	MSPS
FIR1 and FIR2 DIGITAL FILTER CHARACTERISTICS						
	Pass-band width	0.005 db		0.407		f_{OUT}/f_{DATA}
		0.01 dB		0.41		
		0.1 dB		0.427		
		3 dB		0.481		

PINOUT DIAGRAM

PHP PACKAGE
(TOP VIEW)

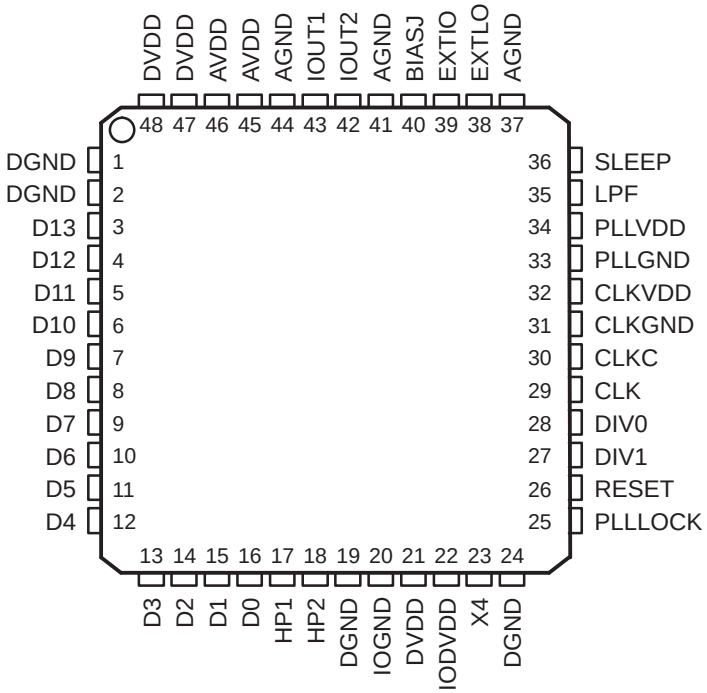

Terminal Functions

TERMINAL		I/O	DESCRIPTION
NAME	NO.		
AGND	37, 41, 44	I	Analog ground return
AVDD	45, 46	I	Analog supply voltage
BIASJ	40	O	Full-scale output current bias
CLK	29	I	External clock input
CLKC	30	I	Complementary external clock input
CLKGND	31	I	Ground return for internal clock buffer
CLKVDD	32	I	Internal clock buffer supply voltage
D[13..0]	3−16	I	Data bits 0 through 13 D13 is most significant data bit (MSB) D0 is least significant data bit (MSB)
DIV[1..0]	27,28	I	PLL prescaler divide ratio settings
DGND	1, 2, 19, 24	I	Digital ground return
DVDD	21, 47, 48	I	Digital supply voltage
EXTIO	39	I/O	Used as external reference input when internal reference is disabled (i.e., EXTLO connected to AVDD). Used as internal reference output when EXTLO = AGND, requires a 0.1-µF decoupling capacitor to AGND when used as reference output
EXTLO	38	I	For internal reference connect to AGND. Connect to AVDD to disable the internal reference
HP1	17	I	Filter 1 high-pass setting. Active high
HP2	18	I	Filter 2 high-pass setting. Active high
IOGND	20	I	Input digital ground return
IODVDD	22	I	Input digital supply voltage
IOUT1	43	O	DAC current output. Full scale when all input bits are set 1
IOUT2	42	O	DAC complementary current output. Full scale when all input bits are 0
LPF	35	I	PLL loop filter connection
PLLGND	33	I	Ground return for internal PLL
PLLLOCK	25	O	PLL lock status bit. PLL is locked to input clock when high. Provides output clock equal to the data rate when the PLL is disabled.
PLLVDD	34	I	Internal PLL supply voltage. Connect to PLLGND to disable PLL clock multiplier.
RESET	26	I	Reset internal registers. Active high
SLEEP	36	I	Asynchronous hardware power-down input. Active high. Internally pull down.
X4	23	I	4× interpolation mode. Active high. Filter 1 is bypassed when connected to DGND

FUNCTIONAL BLOCK DIAGRAM

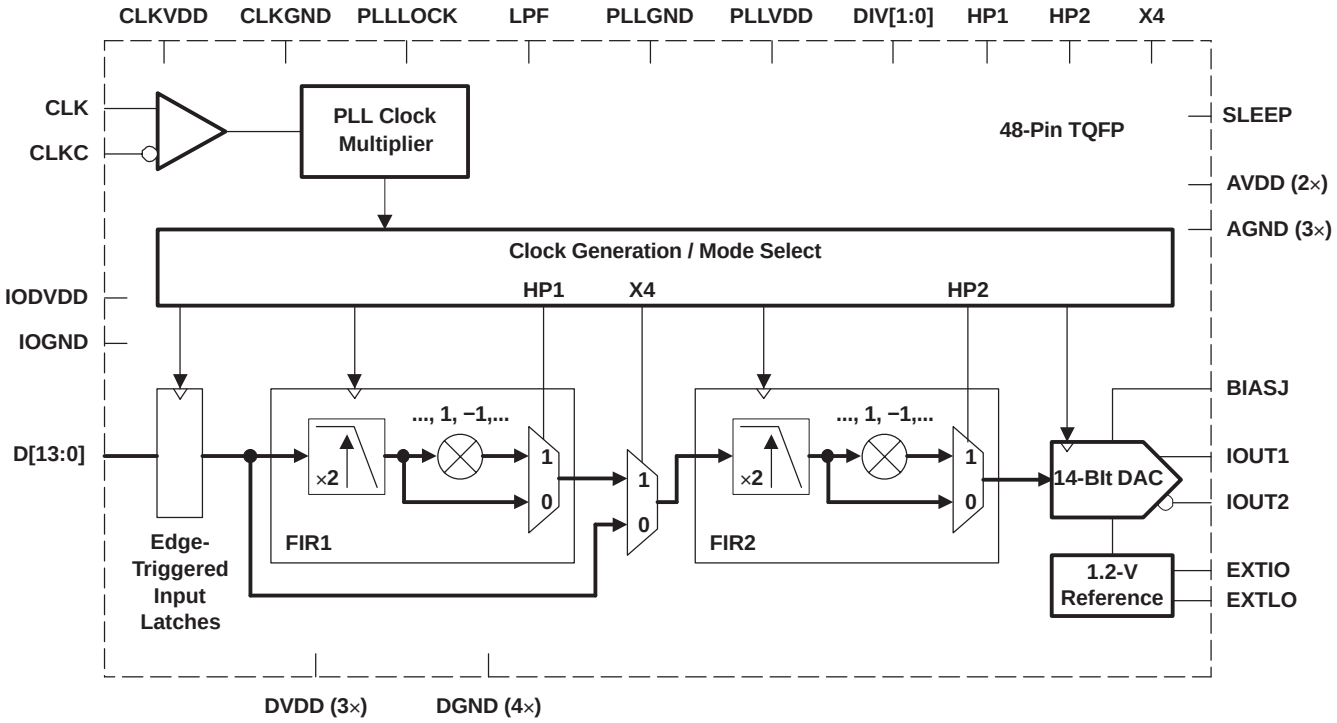

Figure 1. Block Diagram

TYPICAL CHARACTERISTICS

INTEGRAL NONLINEARITY
vs
INPUT CODE

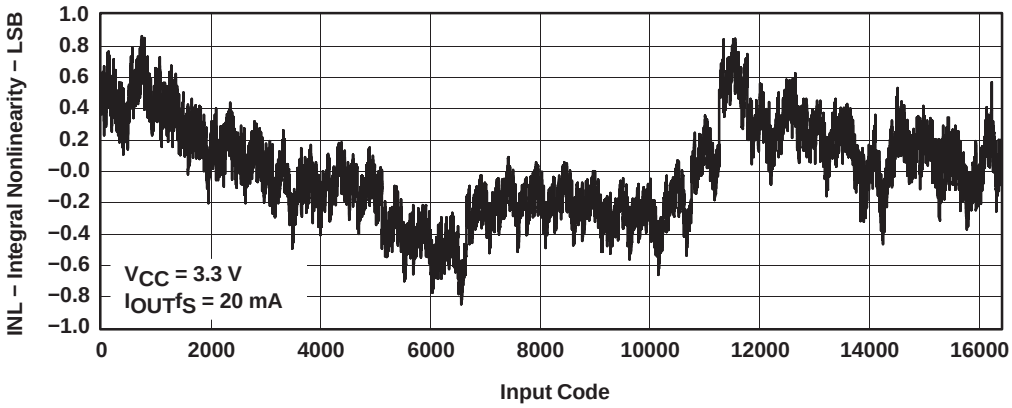

Figure 2

DIFFERENTIAL NONLINEARITY
vs
INPUT CODE

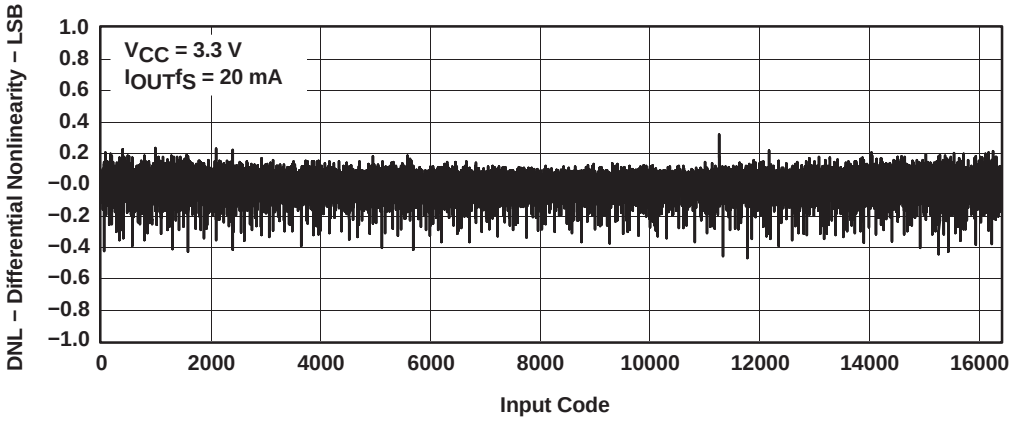

Figure 3

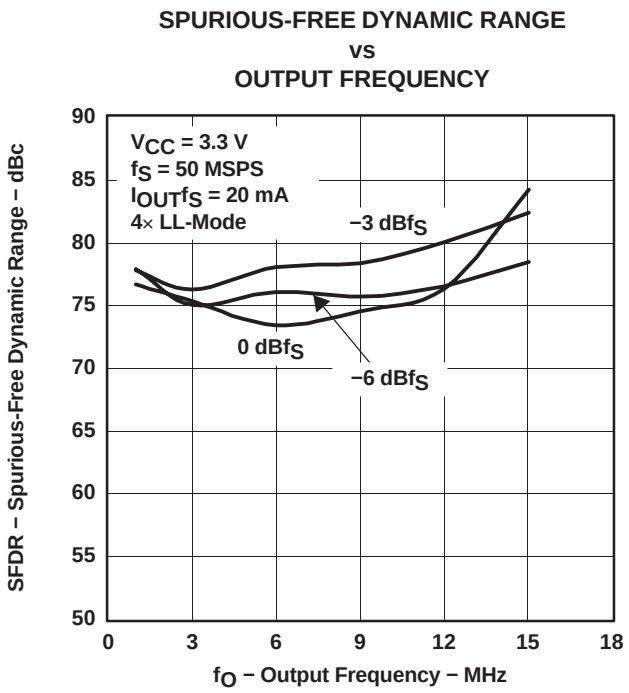

Figure 4

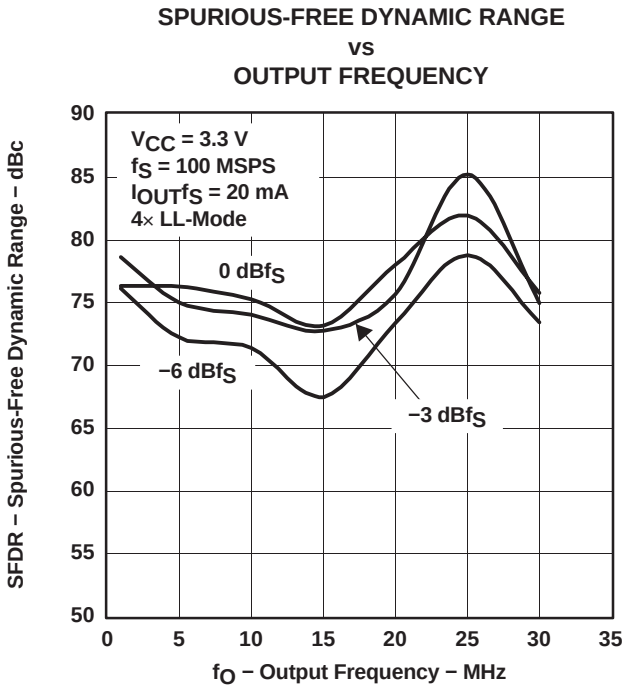

Figure 5

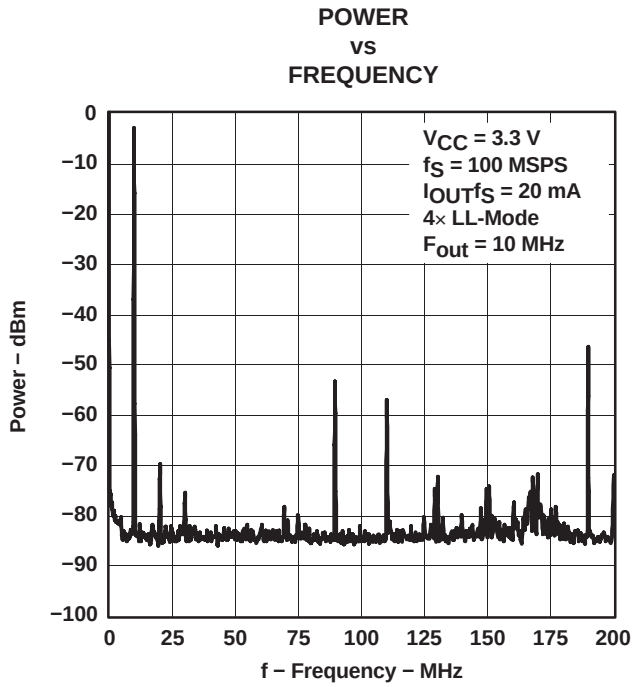

Figure 6

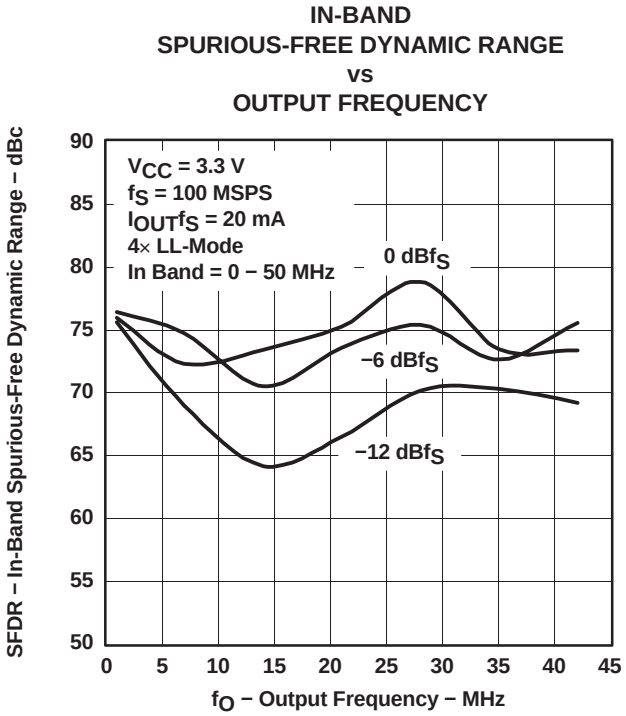

Figure 7

NOTE: All measurements made with PLL off.

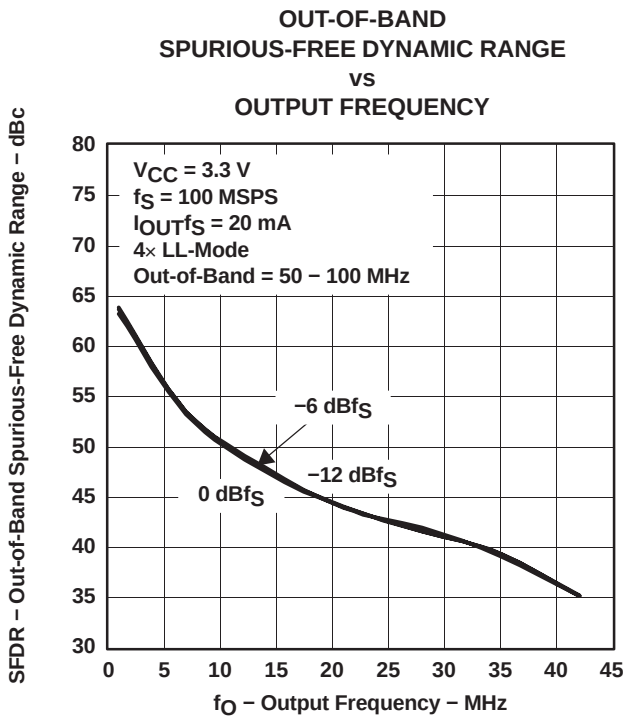

Figure 8

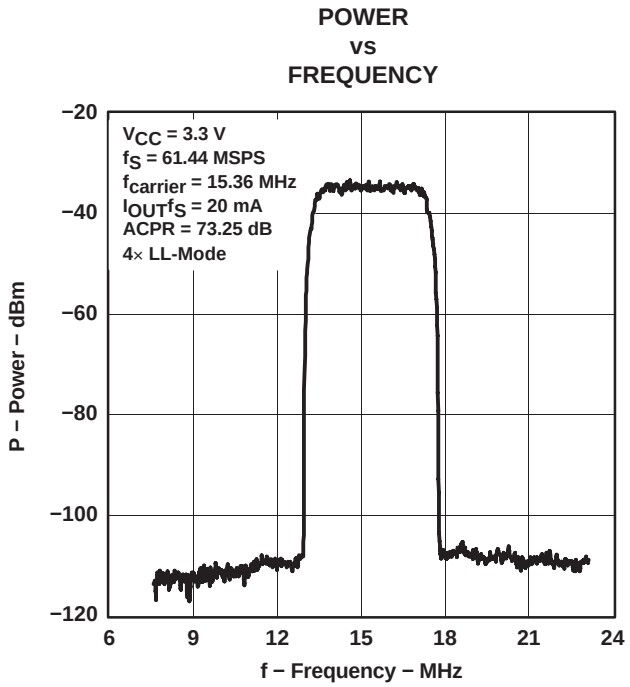

Figure 9

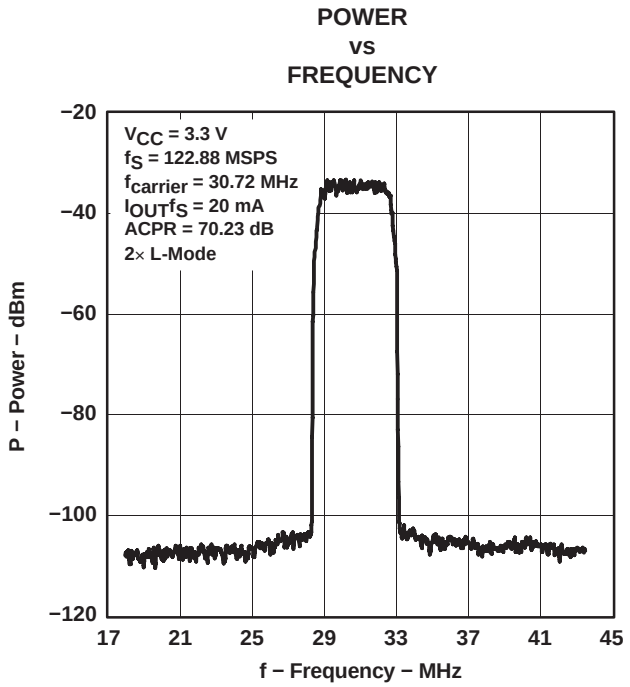

Figure 10

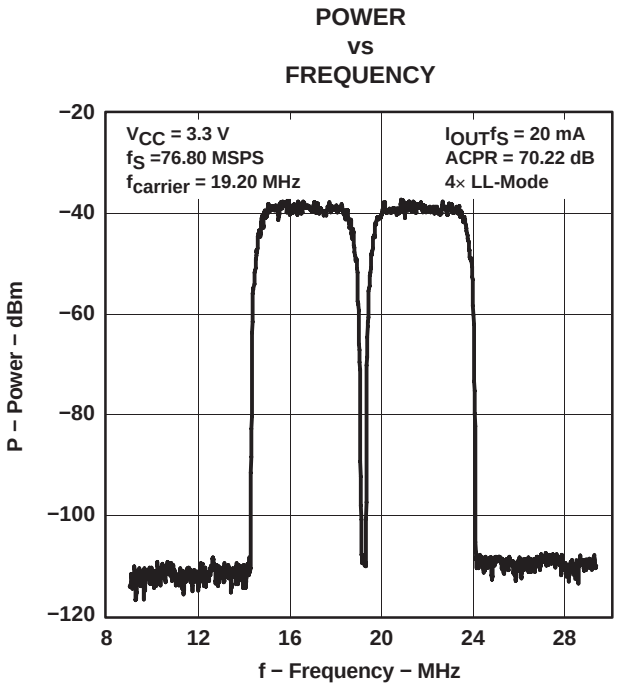

Figure 11

NOTE: All measurements made with PLL off.

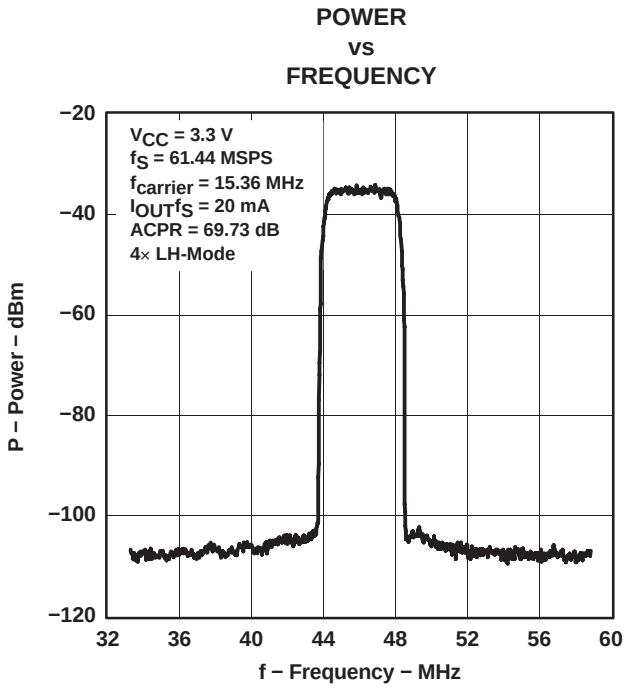

Figure 12

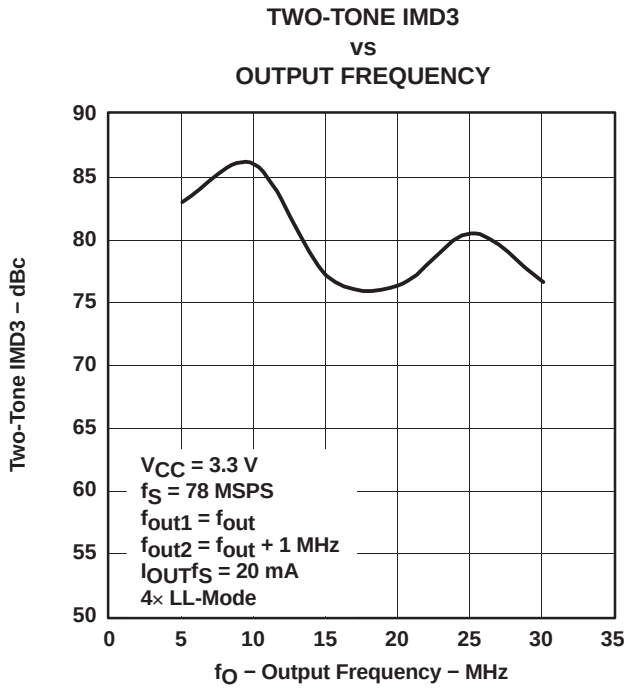

Figure 13

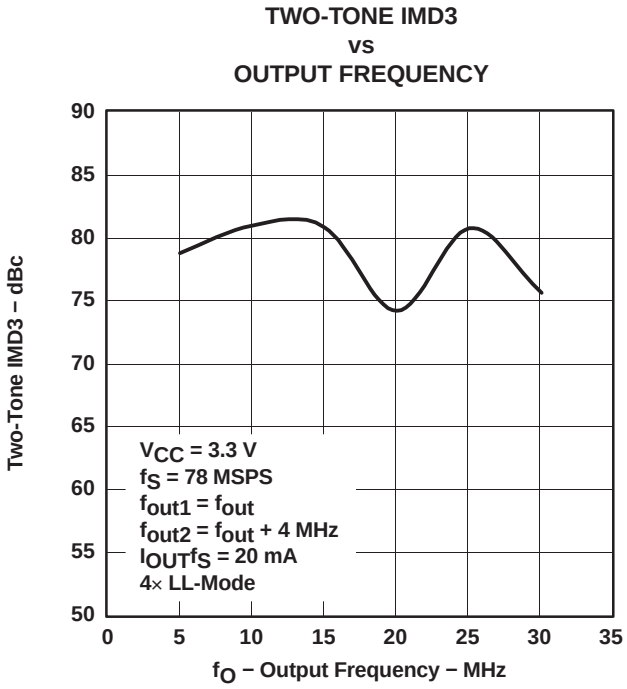

Figure 14

NOTE: All measurements made with PLL off.

DETAILED DESCRIPTION

Figure 1 shows a simplified block diagram of the DAC5674. The CMOS device consists of a segmented array of PMOS current sources, capable of delivering a full-scale output current up to 20 mA. Differential current switches direct the current of each current source to either one of the complementary output nodes IOUT1 or IOUT2. The complementary output currents thus enable differential operation, canceling out common mode noise sources (digital feedthrough, on-chip, and PCB noise), dc offsets, even-order distortion components, and increase signal output power by a factor of two.

The full-scale output current is set using an external resistor R_{BIAS} in combination with an on-chip band-gap voltage reference source (1.2 V) and control amplifier. The current I_{BIAS} through resistor R_{BIAS} is mirrored internally to provide a full-scale output current equal to 32 times I_{BIAS}. The full-scale current can be adjusted from 20 mA down to 2 mA.

Interpolation Filter

The interpolation filters FIR1 and FIR2 can be configured for either low-pass or high-pass response. In this way, higher order images can be selected. Table 1 shows the DAC IF output range for the different filter response combinations, for both the first and second Nyquist zone (after interpolation). Table 2 lists the DAC IF output ranges for two popular GSM data rates. Table 3 shows the W-CDMA IF carrier center frequency for an input data rate of 61.44 MSPS and a fundamental input IF of 15.36 MHz. Figure 15 shows the spectral response; the corresponding nonzero tap weights are:

- [5, −20, 50, −108, 206, −361, 597, −947, 1467, −2267, 3633, −6617, 20746, 32768]

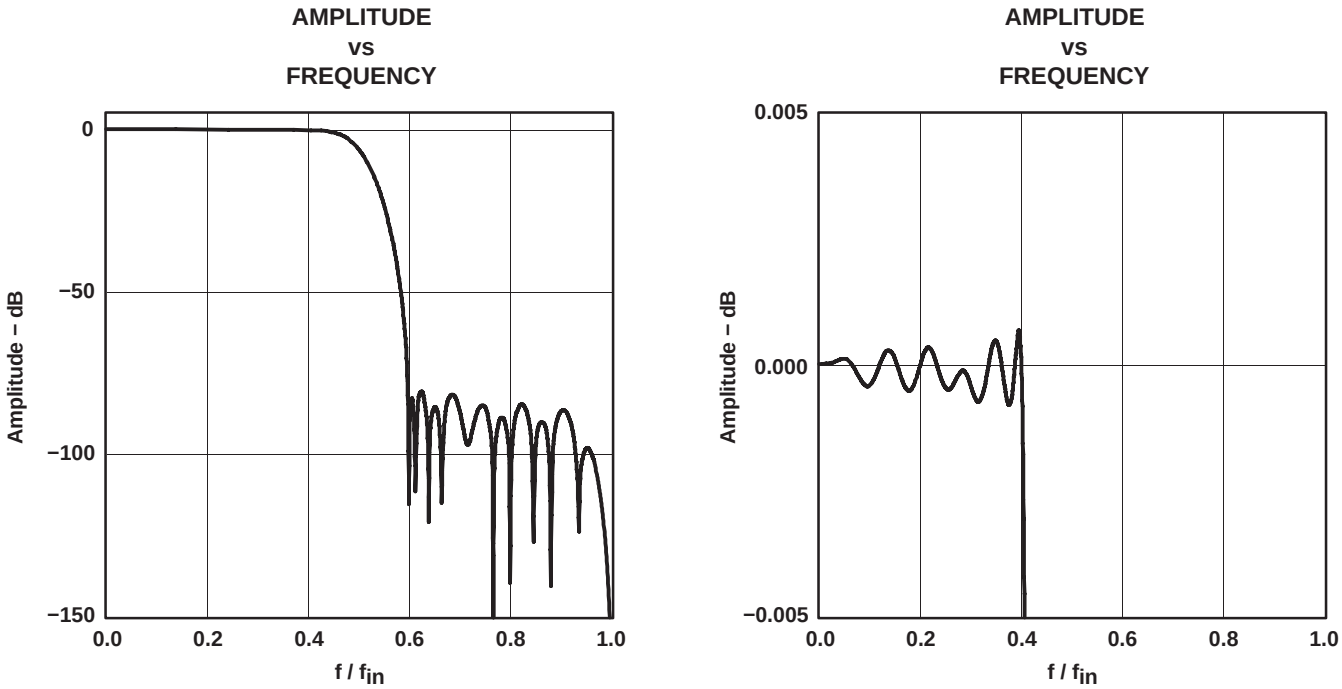

Figure 15. FIR1 and FIR2 Magnitude Spectrum

Table 1. Interpolation Filters Configuration

FILTER 1 CONFIGURATION	FILTER 2 CONFIGURATION	IF OUTPUT RANGE 1 (FIRST NYQUIST ZONE)		IF OUTPUT RANGE 2 (SECOND NYQUIST ZONE)	
		FREQUENCY	SINX/X ATT. [dB]	FREQUENCY	SINX/X ATT. [dB]
Low pass	Low pass	0…0.4F_{data}	0…0.14	3.6…4F_{data}	19.2…∞
Low pass	High pass	1.6…2F_{data}	2.42…3.92	2…2.4F_{data}	3.92…5.94
High pass	Low pass	0.6…0.8F_{data}	0.32…0.58	3.2…3.4F_{data}	12.6…15.4
High pass	High pass	1.2…1.4F_{data}	1.33…1.83	2.6…2.8F_{data}	7.20…8.69

Table 2. Interpolation Filters Configuration: Example Frequencies GSM

FILTER 1 CONFIGURATION	FILTER 2 CONFIGURATION	IF OUTPUT RANGE 1 (FIRST NYQUIST ZONE)		IF OUTPUT RANGE 2 (SECOND NYQUIST ZONE)	
		IF FREQUENCY [MHz]		IF FREQUENCY [MHz]	
		F_{data} = 52 MSPS	F_{data} = 78 MSPS	F_{data} = 52 MSPS	F_{data} = 78 MSPS
Low pass	Low pass	0…20.8	0…31.2	187.2…208	280.8…312
Low pass	High pass	83.2…108	124.8…156	104…124.8	156…187.2
High pass	Low pass	31.2…41.6	46.8…62.4	166.4…176.8	249.6…265.2
High pass	High pass	62.4…72.8	93.6…109.2	135.2…145.6	202.8…218.4

Table 3. Interpolation Filters Configuration: Example Frequencies W-CDMA, IF = F_{data}/4, F_{DATA} = 61.44 MSPS: F_{update} = 245.76 MSPS

FILTER 1 CONFIGURATION	FILTER 2 CONFIGURATION	IF FREQUENCY [MHZ] (FIRST NYQUIST ZONE)		IF FREQUENCY [MHZ] (SECOND NYQUIST ZONE)	
		IF CENTER [MHz]	SINX/X ATT. [dB]	IF CENTER [MHz]	SINX/X ATT. [dB]
Low pass	Low pass	15.36	0.05	230.4	23.6
Low pass	High pass	107.52	2.93	138.24	5.11
High pass	Low pass	46.08	0.51	199.68	13.2
High pass	High pass	76.8	1.44	168.96	8.29

Low-Pass/Low-Pass 4× Interpolation Filter Operation

Figure 16 shows the low-pass/low-pass interpolation operation where the 4× FIR filter is implemented as a cascade of two 2× interpolation filters with the input signal coming from a digital signal source such as an FPGA or digital upconverter (DUC). Users can place their IF signal at a maximum of 0.4 times the FIR filter input (i.e., DAC5674 input) data rate. For a 100-MSPS data rate, this would translate into a pass band extending to 40 MHz.

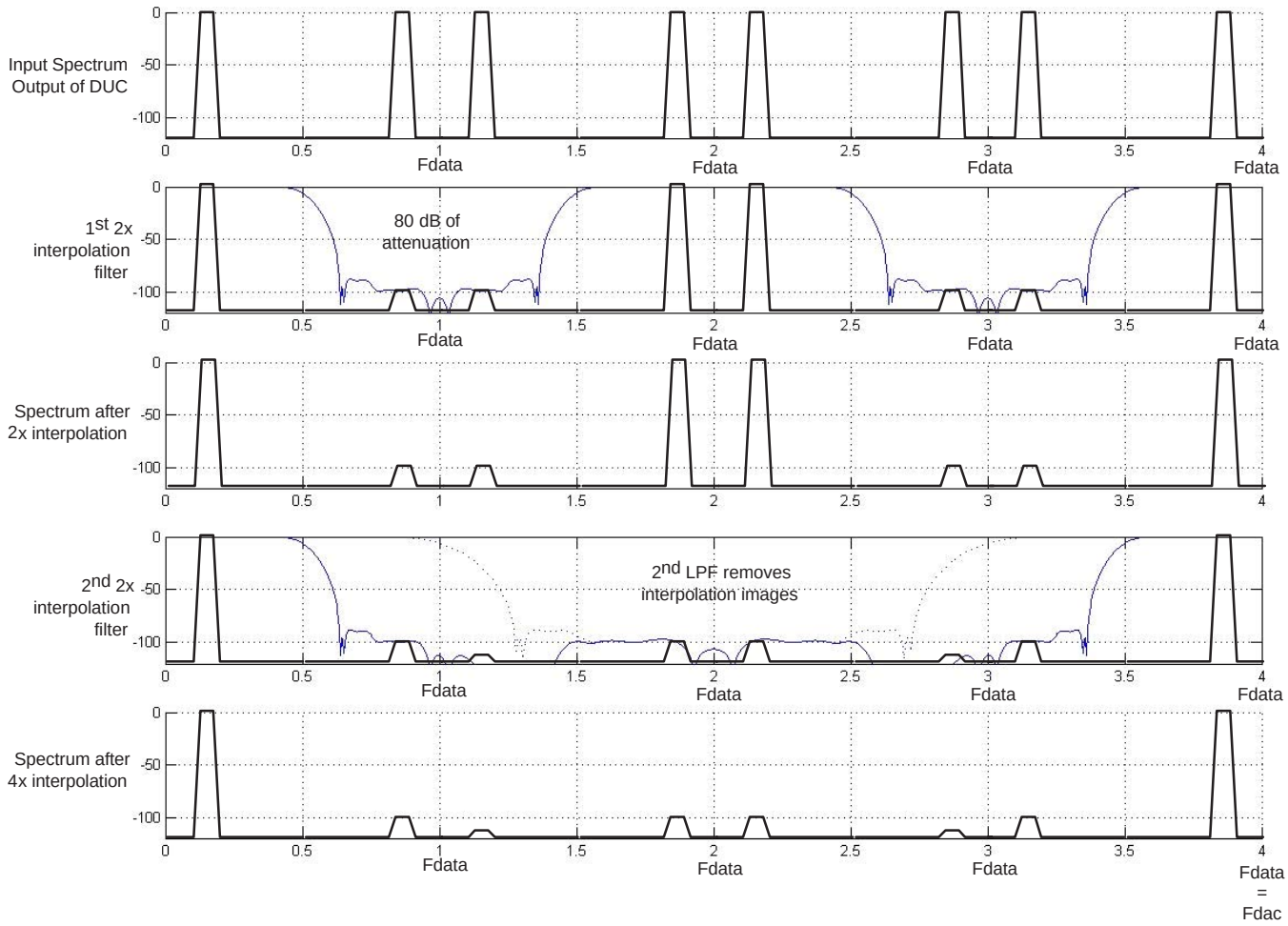

Figure 16. Low-Pass/Low-Pass 4× Interpolation Filter Operation

Low-Pass/High-Pass 4× Interpolation Filter Operation

By configuring the low-pass filters as high-pass filters, the user can select one of the images present at multiples of the clock. Figure 17 shows the low-pass/high-pass filter response. After digital filtering, the DAC transmits at $2F_{data}$ − IF and $2F_{data}$ + IF. This configuration is equivalent to sub-sampling receiver systems where a high-speed analog-to-digital converter samples high IF frequencies with relatively low sample rates, resulting in low (output) data rates.

The placement of the IF in the first Nyquist zone combined with the DAC5674 input data determines the final output signal frequency. For F_{data} = 100 MSPS and a fundamental IF of 0.4 × F_{data} = 40 MHz, this would translate into images located at 160 MHz and 240 MHz. Note that this is the equivalent of mixing a 40-MHz analog IF signal with a 200-MHz sine wave. By doing this, the first mixer in the total transmission chain is eliminated.

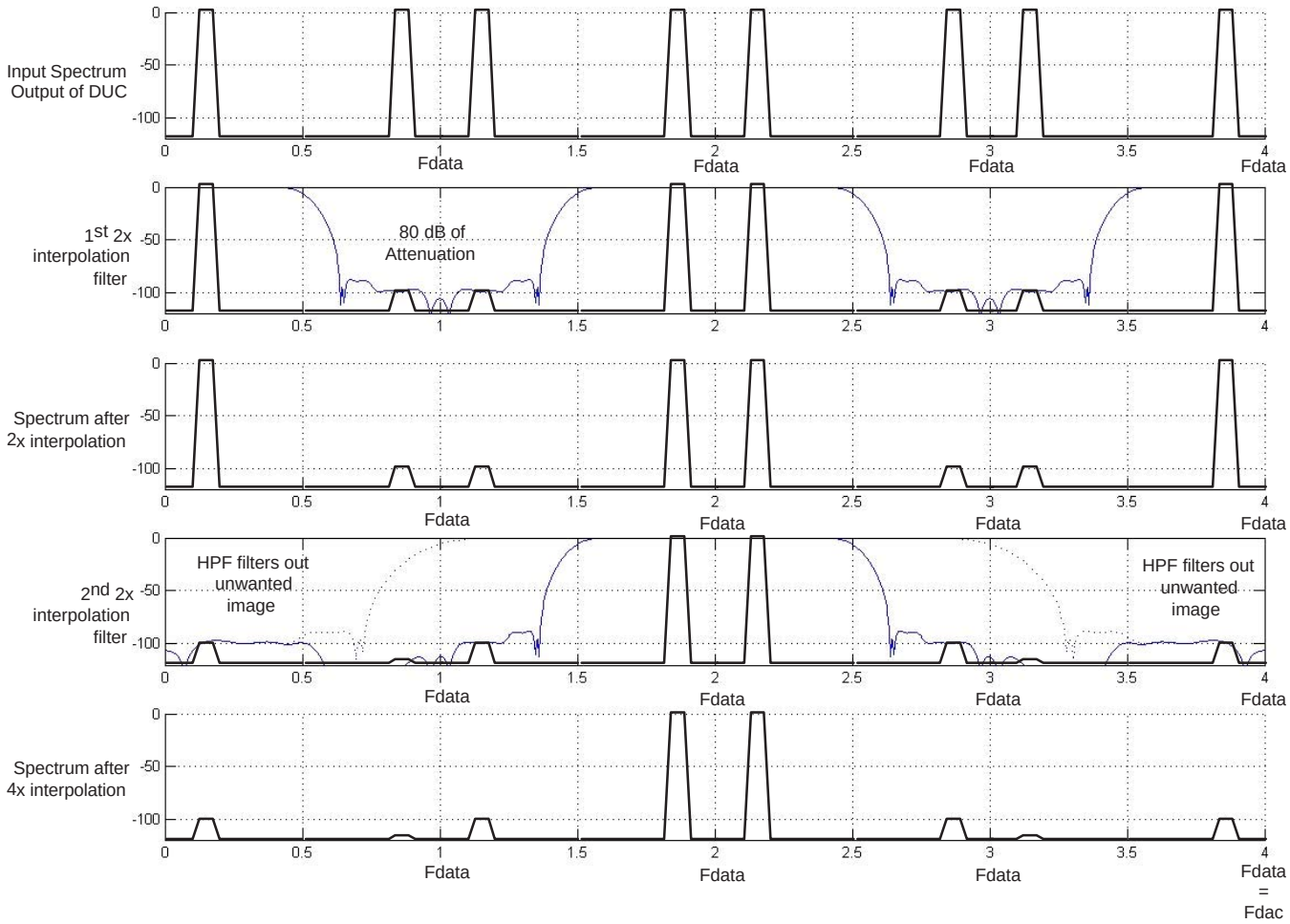

Figure 17. Low-Pass/High-Pass 4× Interpolation Filter Operation

High-Pass/Low-Pass 4× Interpolation Filter Operation

Figure 18 shows the high-pass/low-pass filter configuration. Images at F_{data} − IF and $3F_{data}$ + IF can be selected. Note that the latter image severely attenuates by the sinx/x response. The transition bandwidths of filter 1 and filter 2 occupy 0.2Fdata. The combination of these transition bands results in an output IF between $0.6…0.8F_{data}$.

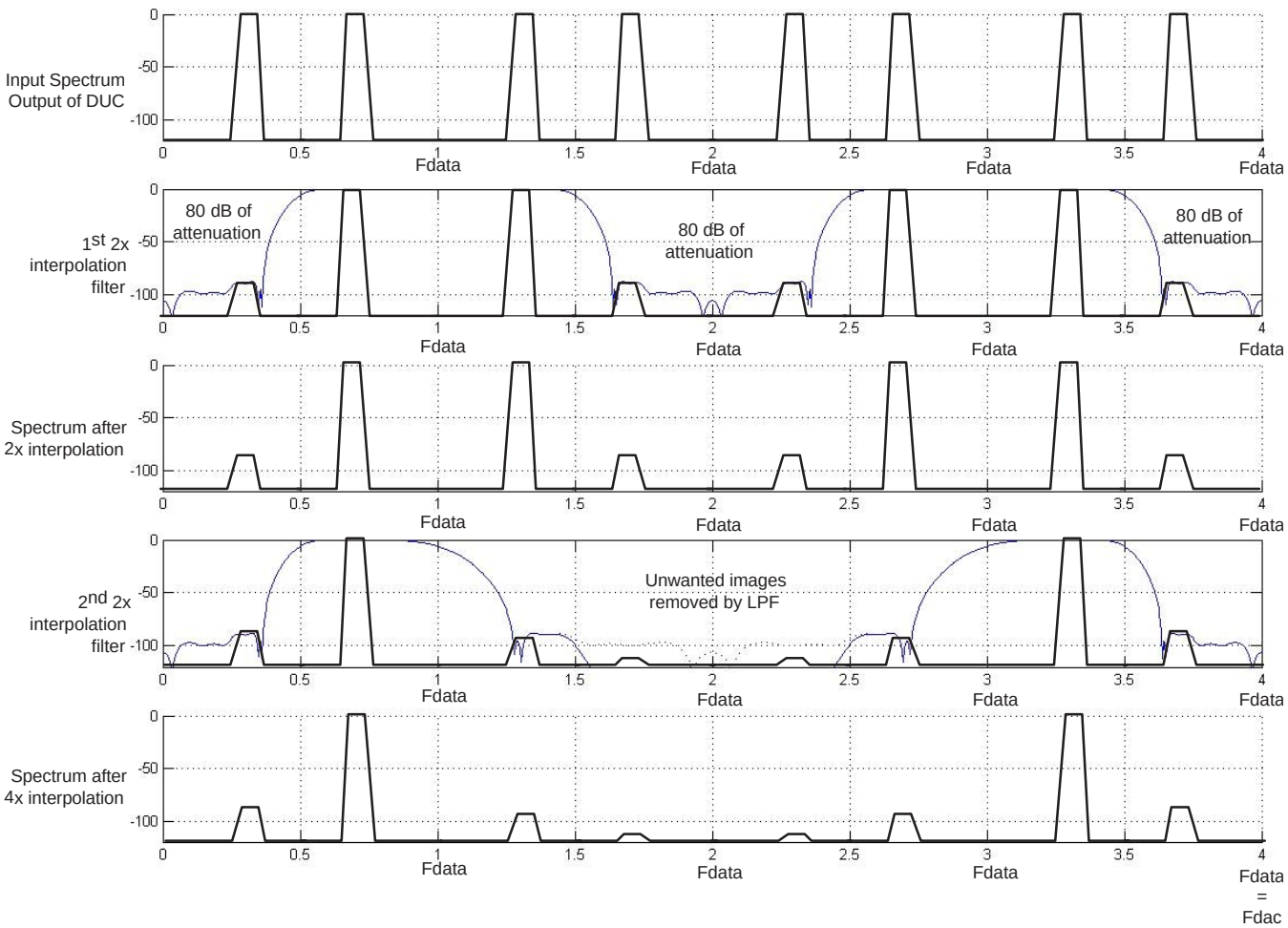

Figure 18. High-Pass/Low-Pass 4× Interpolation Filter Operation

High-Pass/High-Pass 4× Interpolation Filter Operation

Figure 19 shows the high-pass/high-pass filter configuration. The transition bands of filter 1 and filter 2 allow for the placement of the fundamental IF between 0.2…0.4F_{data}. In this configuration, the user can select the images at F_{data} + IF and 3F_{data} − IF. For F_{data} = 100 MSPS and a fundamental IF of 0.4 × F_{data} = 40 MHz, this would translate into images located at 140 MHz and 260 MHz. Note that this is the equivalent of mixing a 60-MHz analog IF signal with a 200-MHz sine wave.

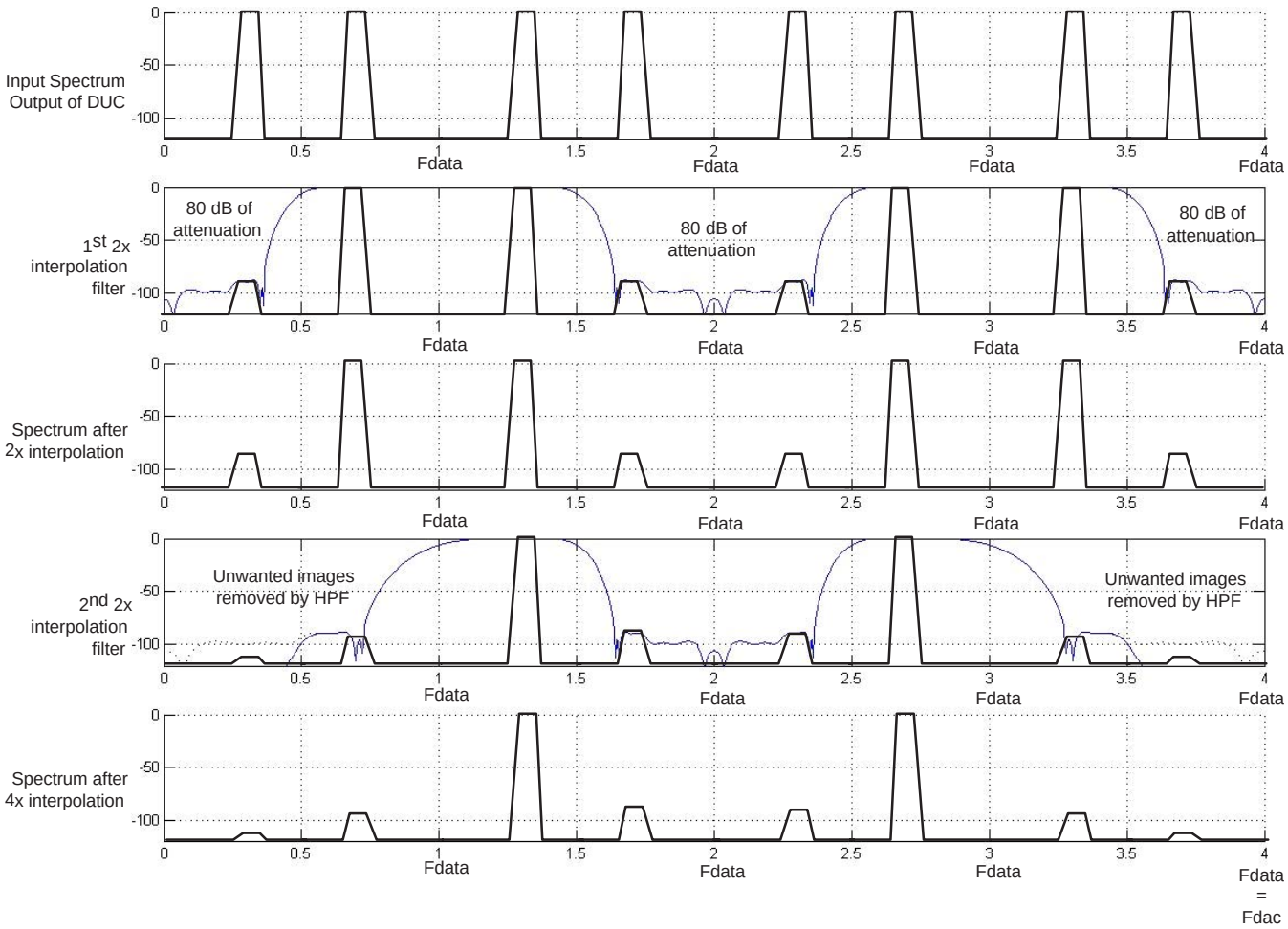

Figure 19. High-Pass/High-Pass 4× Interpolation Filter Operation

DAC Sinx/x Output Attenuation

The output frequency spectrum of the DACs shows some inherent attenuation due to their sample-and-hold nature. The output of the DAC is normally seen as the signal sample held over the sampling time in a stair-step manner. In the time domain, this step-like output can be thought of as an impulse sample of some value convolved with a unit-square pulse with a duration of the sampling time. In the frequency domain, this translates to the frequency response of the discretely sampled signal multiplied by the sinx/x frequency response function of the square pulse. The sinx/x function has a null at every integer multiple of the sampling rate.

This is shown in Figure 20 for various data rates at 4× interpolation.

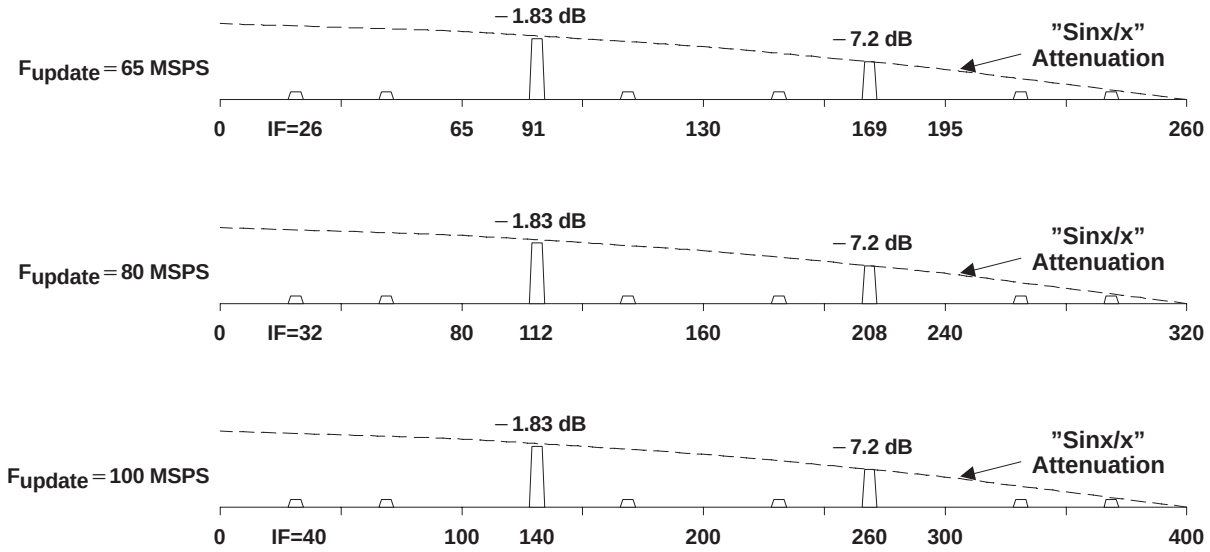

Figure 20. High-Pass 4× Interpolation Filter Operation: Example Frequencies

Clock Generation Function

An internal phase-locked loop (PLL) or external clock can be used to derive the internal clocks (1×, 2×, and 4×) for the logic, FIR interpolation filters, and DAC. Basic functionality is depicted in Figure 21. Power for the internal PLL blocks (PLLVDD and PLLGND) is separate from the other clock generation blocks power (CLKVDD and CLKGND), thus minimizing phase noise within the PLL. The PLLVDD pin establishes internal/external clock mode: when PLLVDD is grounded, external clock mode is active and when PLLVDD is 3.3 V, internal clock mode is active.

In external clock mode, the user provides a differential external clock on pins CLK/CLKC. This clock becomes the 4× clock and is twice divided down to generate the 2× and 1× clocks. The 2× or 1× clock is multiplexed out on the PLLLOCK pin to allow for external clock synchronization.

In internal clock mode, the user provides a differential external reference clock on CLK/CLKC. A type four phase-frequency detector (PFD) in the internal PLL compares this reference clock to a feedback clock and drives the PLL to maintain synchronization between the two clocks. The feedback clock is generated by dividing the VCO output by 1×, 2×, 4×, or 8×, as selected by the prescaler (DIV[1:0]). The output of the prescaler is the 4× clock, and is divided down twice to generate the 2× and 1× clocks. Pin X4 selects the 1× or 2× clock to clock in the input data; the selected clock is also fed back to the PFD for synchronization. The PLLLOCK pin is an output indicating when the PLL has achieved lock. An external RC low-pass PLL filter is provided by the user at pin LPF. See the *Low-Pass Filter* section for filter setting calculations. Table 4 provides a summary of the clock configurations with corresponding data rate ranges.

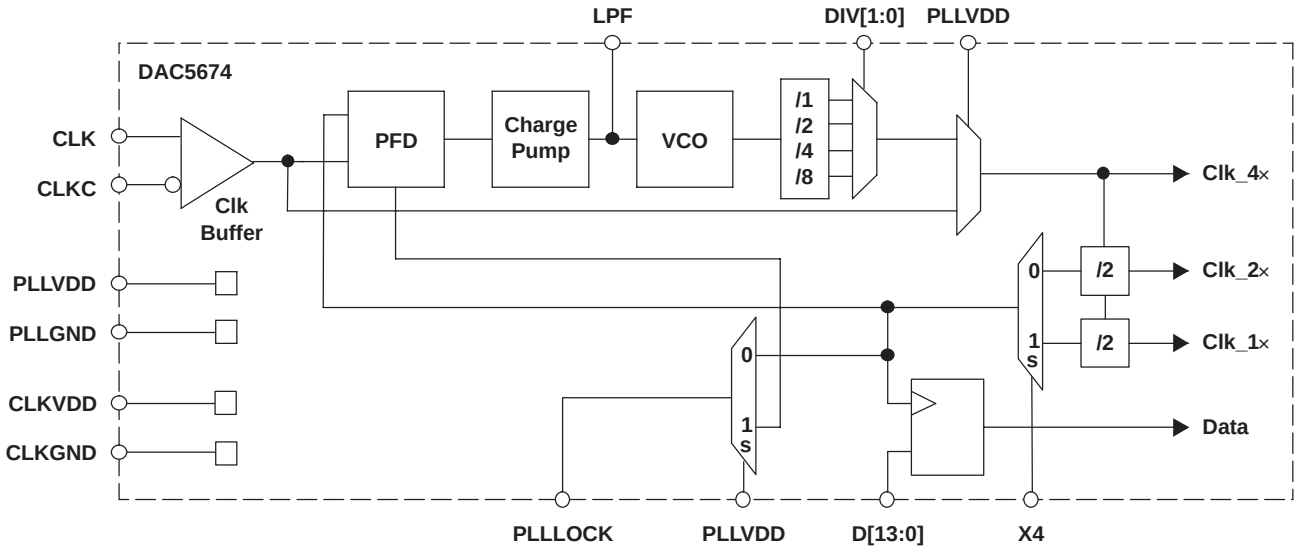

Figure 21. Clock Generation Functional Diagram

Table 4. Clock Mode Configuration

CLOCK MODE	PLLVDD	DIV[1:0]	X4	DATA RANGE (MHz)	PLLLOCK PIN FUNCTION
External 2×	0 V	XX	0	DC to 200	External clock/2
External 4×	0 V	XX	1	DC to 100	External clock/4
Internal 2×	3.3 V	00	0	100 to 200	Internal PLL lock indicator
Internal 2×	3.3 V	01	0	50 to 100	Internal PLL lock indicator
Internal 2×	3.3 V	10	0	25 to 50	Internal PLL lock indicator
Internal 2×	3.3 V	11	0	12 to 25	Internal PLL lock indicator
Internal 4×	3.3 V	00	1	50 to 100	Internal PLL lock indicator
Internal 4×	3.3 V	01	1	25 to 50	Internal PLL lock indicator
Internal 4×	3.3 V	10	1	12 to 25	Internal PLL lock indicator
Internal 4×	3.3 V	11	1	5 to 12	Internal PLL lock indicator

Low-Pass Filter

The PLL consists of a type four phase-frequency detector (PFD), charge pump, external low-pass loop filter, voltage to current converter, and current controlled oscillator (ICO) as shown in Figure 22. The DAC5674 evaluation board comes with component values R = 200, C1 = 0.01 µF, and C2 = 100 pF. These values have been designed to give the phase margins and loop bandwidths listed in Table 5 for the five divide down factors of prescaling and interpolation. Note that the values derived were based on a charge pump current output of 1 mA and a VCO gain of 300 MHz/V (nominal at Fvco = 400 MHz). With this filter, the settling time from a phase or frequency disturbance is about 2.5 µs. If different PLL dynamics are required, DAC5674 users can design a second order filter for their application; see the *Designing the PLL Loop Filter* section of this data sheet.

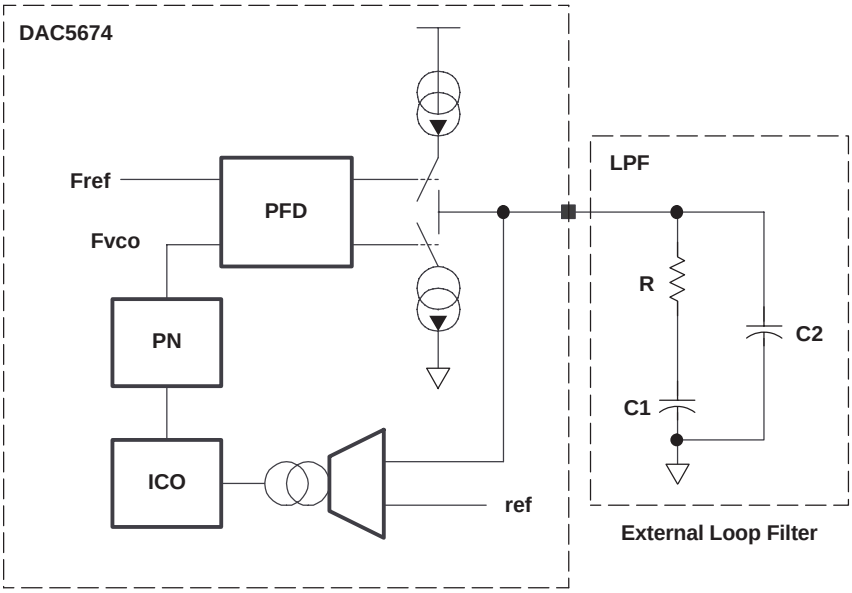

Figure 22. PLL Functional Block Diagram

Table 5. DAC5674 Evaluation Board PLL Loop Filter Parameters

N(1)	PHASE MARGIN (DEGREES)	BANDWIDTH (MHZ)
2	60	1.6
4	71	1.4
8	77	1
16	78	0.7
32	74	0.4

(1) N is the VCO divide-down factor from prescale and interpolation.

Non-Harmonic Clock-Related Spurious Signals

In interpolating DACs, imperfect isolation between the digital and DAC clock circuits generates spurious signals at frequencies related to the DAC clock rate. The digital interpolation filters in these DACs run at subharmonic frequencies of the output rate clock, where these frequencies are $f_{DAC}/2$, N = 1,2. For example, for 2× interpolation only one interpolation filter runs at $f_{DAC}/2$; for 4× interpolation, on the other hand, two interpolation filters run at $f_{DAC}/2$ and $f_{DAC}/4$. These lower-speed clocks for the interpolation filter mix with the DAC clock circuit and create spurious images of the wanted signal and second Nyquist-zone image at offsets of $f_{DAC}/2^N$.

Figure 23 shows the location of the largest spurious signals for 4× interpolation for a real signal. With a real output signal, there is no distinction between negative and positive frequencies, and therefore the signals that appear at negative frequencies wrap and potentially fall near the wanted signal. In particular, at IFs near $f_{DAC}/8$, $f_{DAC}/4$, and $f_{DAC} \times 3/4$ (50 MHz, 100 MHz, and 150 MHz in this example), the mixing effect results in spurious signals falling near the wanted signal, which may present a problem depending on the system application. For a frequency-symmetric signal (such as a single WCDMA or CDMA carrier), operating at exactly $f_{DAC}/8$, $f_{DAC}/4$ and $f_{DAC} \times 3/4$, the spurious signal falls completely inside the wanted signal, which produces a clean spectrum but may result in degradation of the signal quality.

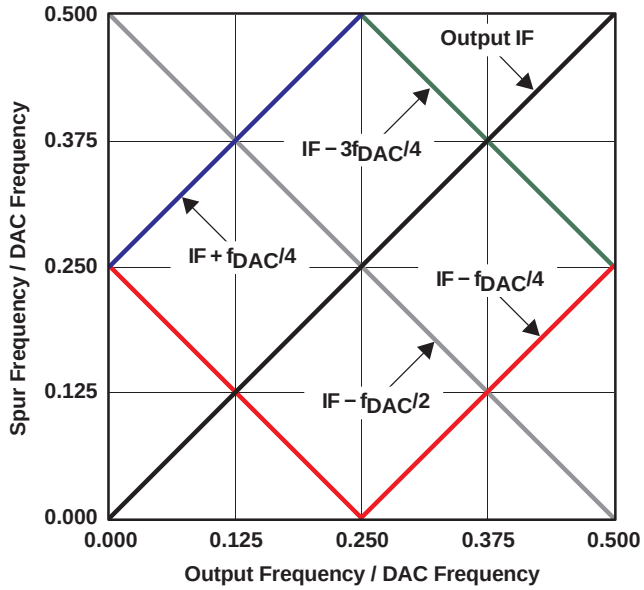

Figure 23. Location of Clock Mixing Spurs vs IF for 4× Mode

The offset between wanted and spurious signals is maximized at low IFs (< $f_{DAC}/8$) and at $f_{DAC} \times 3/16$, fDAC × 5/16, and fDAC × 7/16. For example, with f_{DATA} = 100 MSPS and 4× interpolation, operating with IF = $f_{DAC} \times 5/16$ = 125 MHz results in spurious signals at offsets of ±50 MHz from the wanted signal.

Figure 24a shows the amplitude of each spurious signal as a function of IF in external-clock mode. The dominant spurious signal is IF − $f_{DAC}/2$. The amplitudes of the IF + $f_{DAC}/4$ and IF − $f_{DAC}/4$ are the next-highest spurious signals and are approximately at the same amplitude. Finally, at IF frequencies greater than 100 MHz, small spurious signals at IF − $f_{DAC} \times 3/4$ are measurable.

Figure 24b shows the amplitude of each spurious signal as a function of IF in PLL clock mode. Generating the DAC clock with the onboard PLL/VCO increases the IF − $f_{DAC}/2$ by 3 dB. The amplitude of the IF ± $f_{DAC}/4$ and IF − $f_{DAC} \times 3/4$ remain at about the same level as in the external-clock mode.

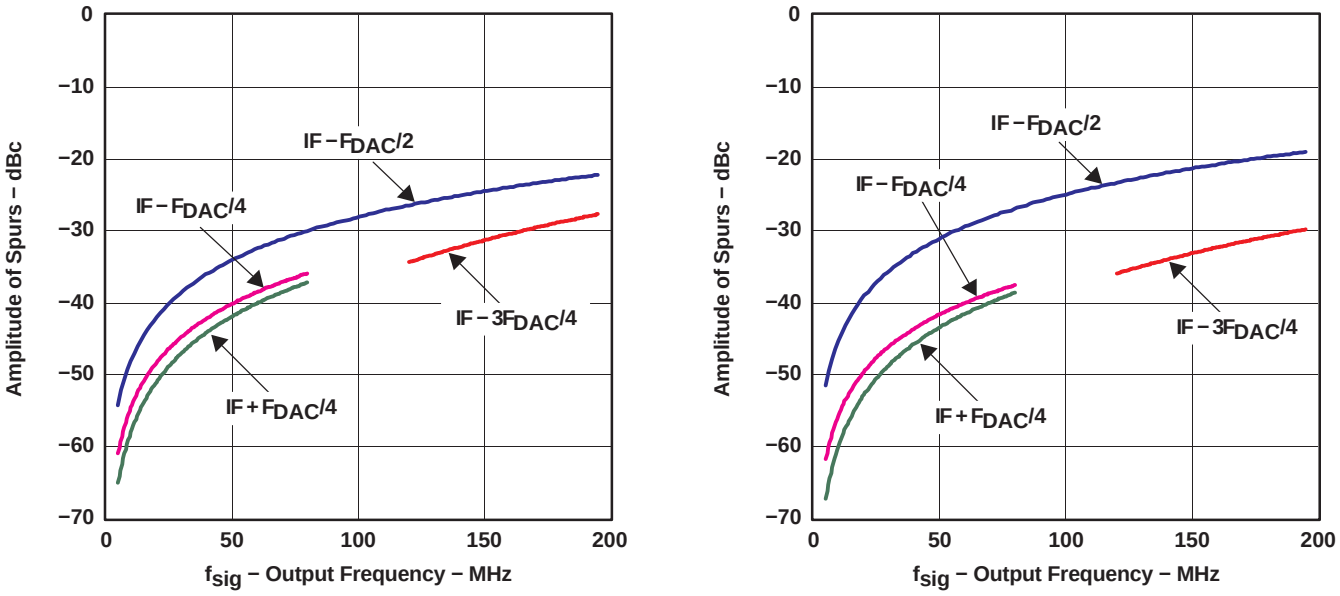

a. External Clock Mode

b. PLL Mode

Figure 24. External Clock Mode and PLL Mode

The amplitudes in Figure 24 are typical values and vary by a few dB across different parts, supply voltages, and temperatures. Figure 23 and Figure 24 can be used to estimate the non-harmonic clock-related spurious signals. Take the example for using the DAC5674 in external-clock mode, f_{DAC} = 400 MHz, 4× interpolation, and IF = 30 MHz. Figure 23 and Figure 24a predict the spurious signals shown in Table 6. The resulting spurs are at 170 MHz at −38 dBc, 130 MHz at −45 dBc, and 70 MHz at −43 dBc.

Table 6. Predicted Frequency and Amplitude for F_{DAC} − 400 MHz, 4× Interpolation

SPURIOUS COMPONENT	SPURIOUS FREQUENCY	AMPLITUDE dBc
IF – $f_{DAC}/2$	170 MHz	–38
IF + $f_{DAC}/4$	130 MHz	–45
IF – $f_{DAC}/4$	70 MHz	–43
IF – $3f_{DAC}/4$	>200 MHz	N/A

Figure 25 shows the DAC5674 output spectrum for the preceding example. The amplitudes of the clock-related spurs agree quite well with the predicted amplitudes in Table 6.

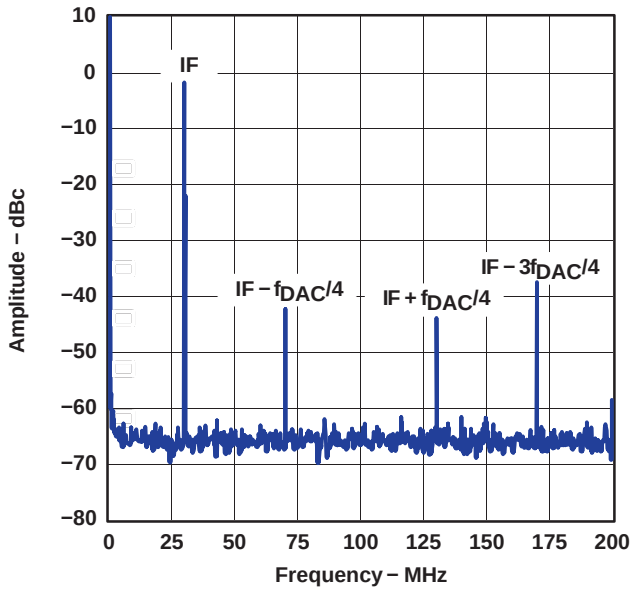

Figure 25. DAC Output Spectrum With F_{DAC} = 400 MSPS, 4× Interpolation, IF=30 MHz, External Clock

Digital Inputs

Figure 26 shows a schematic of the equivalent CMOS digital inputs of the DAC5674. The CMOS-compatible inputs have logic thresholds of IOVDD/2 ±20%. The 14-bit digital data input follows the offset positive binary coding scheme.

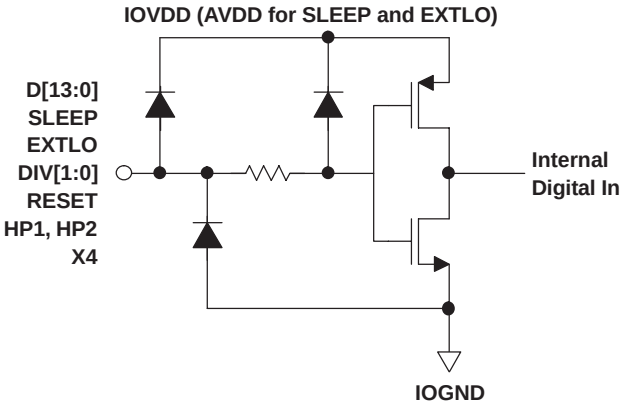

Figure 26. CMOS/TTL Digital Equivalent Input

Clock Input and Timing

Figure 27 shows the clock and data input timing diagram for internal and external clock modes, respectively. Note that a negative value indicates a reversal of the edge positions as shown in the timing diagram. Figure 27 also shows the delay (t_d) of the 1×/2× data clock (PLLLOCK) from CLK in external clock mode (typical t_d = 4.1 ns). The latency from data to DAC is defined by Figure 28. The DAC5674 features a differential clock input. In internal clock mode, the internal data clock is a divided down version of the PLL clock (/2 or /4), depending on the level of interpolation (2× or 4×). In external mode, the internal data clock is a divided down version of the input CLK (/2 or /4), depending on the level of interpolation (2× or 4×). Internal edge-triggered flip-flops latch the input word on the rising edge of the positive data clock.

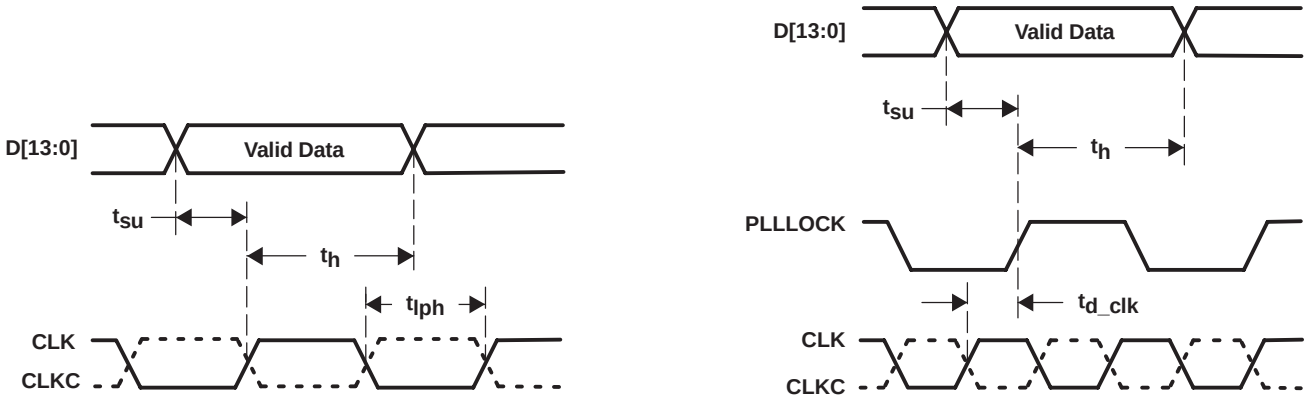

Figure 27. Internal (Left) and External (Right) Clock Mode Timing

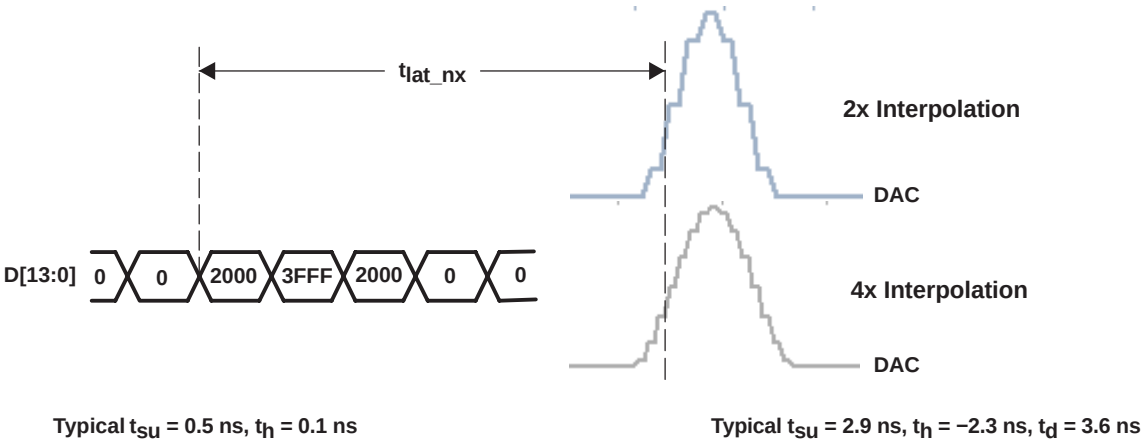

Figure 28. Data to DAC Latency

Figure 29 shows an equivalent circuit for the clock input.

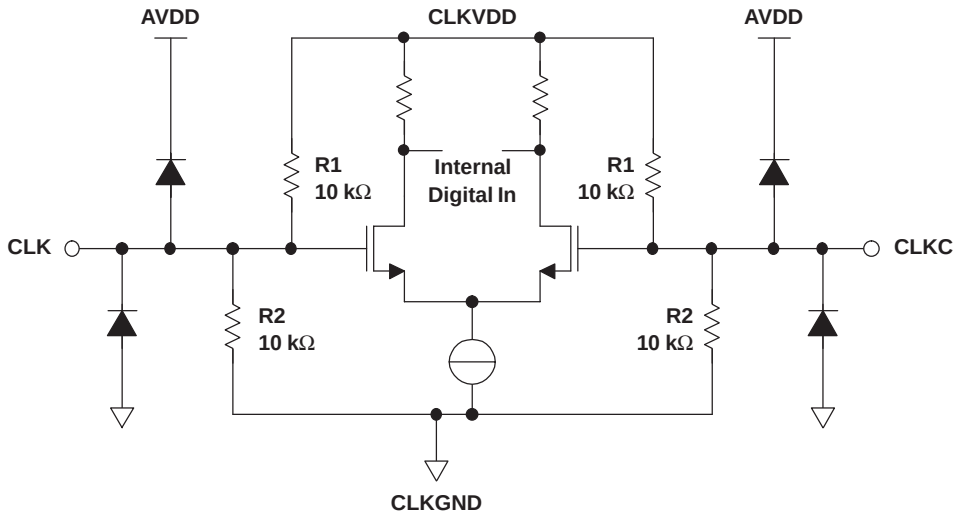

Figure 29. Clock Input Equivalent Circuit

Figure 30, Figure 31, Figure 32, and Figure 33 show various input configurations for driving the differential clock input (CLK/CLKC).

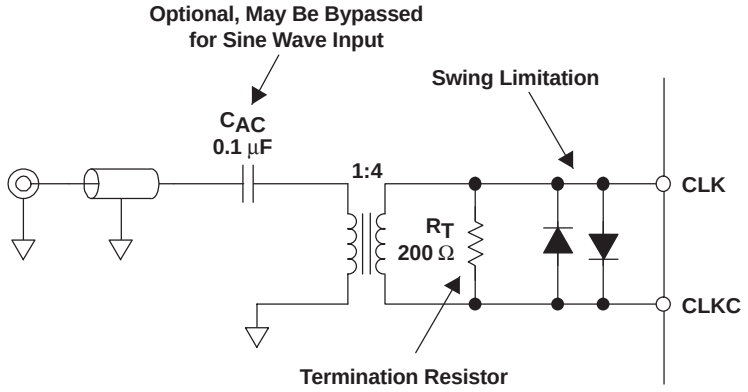

Figure 30. Preferred Clock Input Configuration

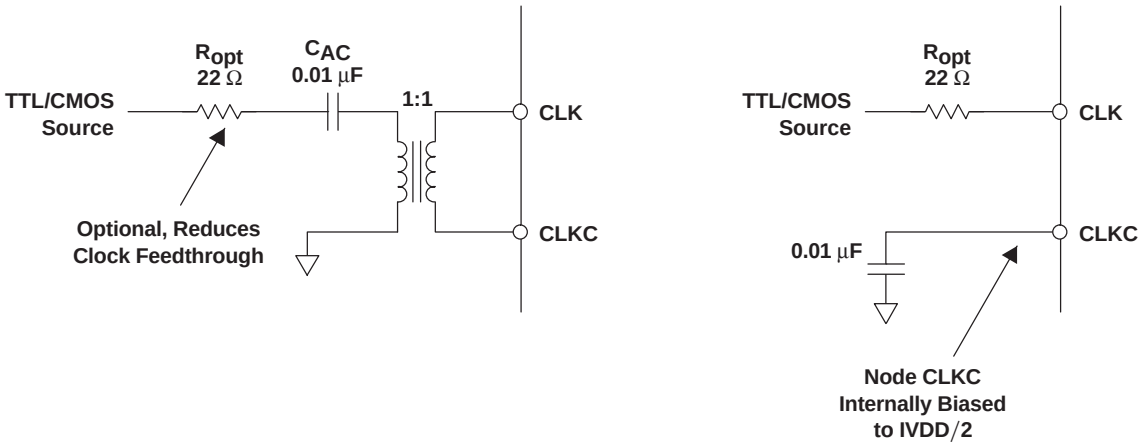

Figure 31. Driving the DAC5674 With a Single-Ended TTL/CMOS Clock Source

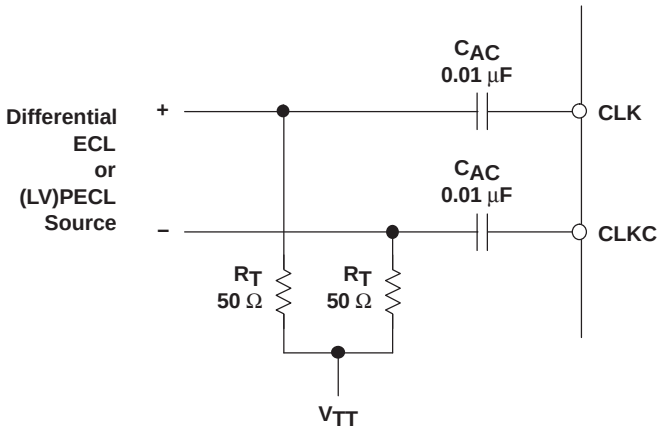

Figure 32. Driving the DAC5674 With Differential ECL/PECL Clock Source

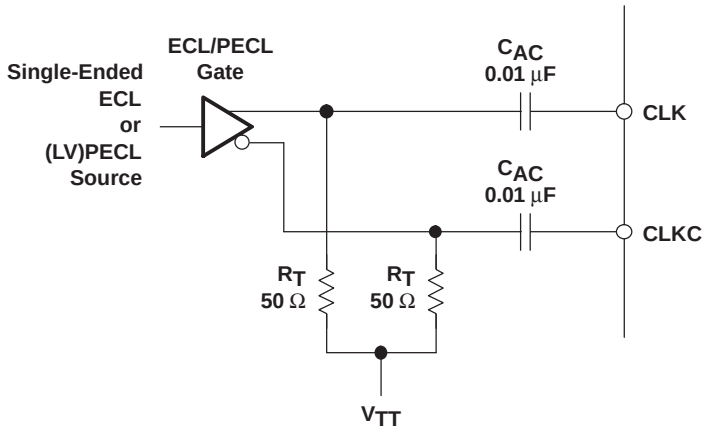

Figure 33. Driving the DAC5674 With a Single-Ended ECL/PECL Clock Source

Supply Inputs

The DAC5674 comprises separate analog and digital supplies at AVDD, DVDD, and IOVDD. These supplies can range from 3 V to 3.6 V for AVDD, 1.65 to 1.95 V for DVDD, and 1.65 to 3.6 for IOVDD.

DAC Transfer Function

The DAC5674 delivers complementary output currents IOUT1 and IOUT2. The DAC supports straight binary coding, with D13 being the MSB and D0 the LSB. Output current IOUT1 equals the approximate full-scale output current when all input bits are set high, i.e., the binary input word has the decimal representation 16383. Full-scale output current flows through terminal IOUT2 when all input bits are set low (mode 0, straight binary input). The relation between IOUT1 and IOUT2 can thus be expressed as:

$$IOUT1 = \frac{2^N - 1}{2^N} IOUT_{FS} - IOUT2$$

Where $IOUT_{FS}$ is the full-scale output current, N = 14 bits. The output currents can be expressed as:

$$IOUT1 = IOUT_{FS} \times \frac{CODE}{16384}$$

$$IOUT2 = IOUT_{FS} \times \frac{16383 - CODE}{16384}$$

Where CODE is the decimal representation of the DAC data input word. Output currents IOUT1 and IOUT2 drive resistor loads (R_L) or a transformer with equivalent input load resistance (R_L). This would translate into single-ended voltages VOUT1 and VOUT2 at terminal IOUT1 and IOUT2, respectively, of:

$$VOUT1 = IOUT1 \times R_L = IOUT_{FS} \times \frac{CODE}{16384} \times R_L$$

$$VOUT2 = IOUT2 \times R_L = IOUT_{FS} \times \frac{16383 - CODE}{16384} \times R_L$$

The differential output voltage $VOUT_{DIFF}$ can thus be expressed as:

$$VOUT_{DIFF} = VOUT1 - VOUT2 = IOUT_{FS} \times \frac{2CODE - 16383}{16384} \times R_L$$

The latter equation shows that applying the differential output results in doubling of the signal power delivered to the load. Because the output currents IOUT1 and IOUT2 are complementary, they become additive when processed differentially. Note that care should be taken not to exceed the compliance voltages at node IOUT1 and IOUT2, which would lead to increased signal distortion.

Reference Operation

The DAC5674 comprises a band-gap reference and control amplifier for biasing the full-scale output current. The full-scale output current is set by applying an external resistor R_{BIAS}. The bias current I_{BIAS} through resistor R_{BIAS} is defined by the on-chip band-gap reference voltage and control amplifier. The full-scale output current equals 32 times this bias current. The full-scale output current $IOUT_{FS}$ can thus be expressed as:

$$IOUT_{FS} = 32 \times I_{BIAS} = \frac{32 \times V_{EXTIO}}{R_{BIAS}}$$

where V_{EXTIO} is the voltage at terminal EXTIO. The band-gap reference voltage delivers an accurate voltage of 1.2 V. This reference is active when terminal EXTLO is connected to AGND. An external decoupling capacitor C_{EXT} of 0.1 µF should be connected externally to terminal EXTIO for compensation. The band-gap reference can additionally be used for external reference operation. In that case, an external buffer with high impedance input should be applied in order to limit the band-gap load current to a maximum of 100 nA. The internal reference can be disabled and overridden by an external reference by connecting EXTLO to AVDD. In this case, capacitor C_{EXT} can be omitted. Terminal EXTIO serves as either input or output node.

The full-scale output current can be adjusted from 20 mA to 2 mA by varying resistor R_{BIAS} or changing the externally applied reference voltage. The internal control amplifier has a wide input range, supporting the full-scale output current range of 20 mA.

Analog Current Outputs

Figure 34 shows a simplified schematic of the current source array output with corresponding switches. Differential switches direct the current of each individual PMOS current source to either the positive output node IOUT1 or its complementary negative output node IOUT2. The output impedance is determined by the stack of the current sources and differential switches, and is typically >300 kΩ in parallel with an output capacitance of 5 pF.

The external output resistors are referred to an external ground. The minimum output compliance at nodes IOUT1 and IOUT2 is limited to −1 V, determined by the CMOS process. Beyond this value, transistor breakdown may occur resulting in reduced reliability of the DAC5674 device. The maximum output compliance voltage at nodes IOUT1 and IOUT2 equals 1.25 V. Exceeding the maximum output compliance voltage adversely affects distortion performance and integral nonlinearity. The optimum distortion performance for a single-ended or differential output is achieved when the maximum full-scale signal at IOUT1 and IOUT2 does not exceed 0.5 V.

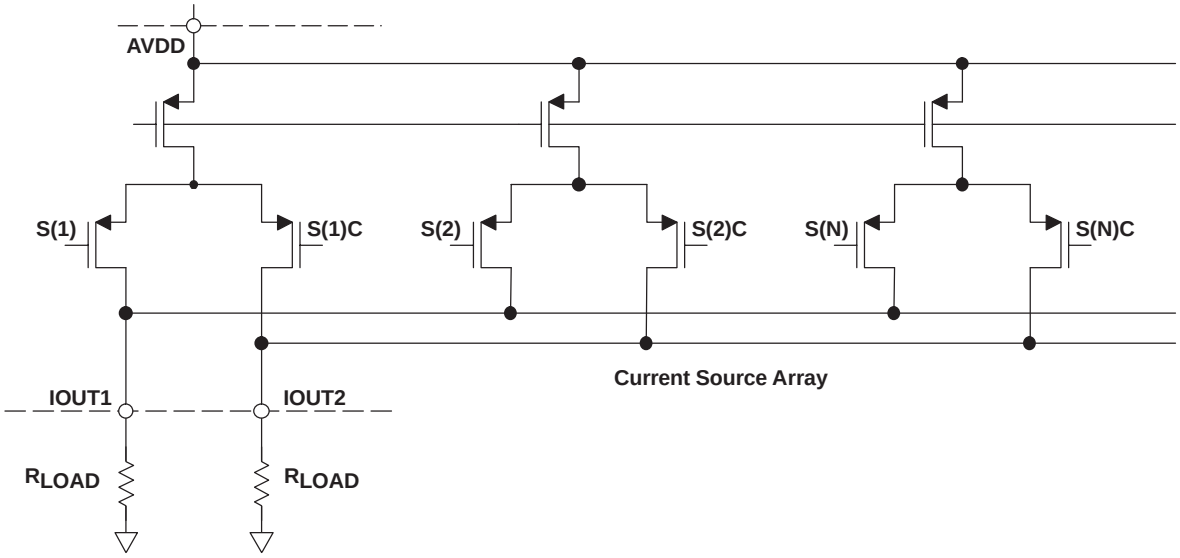

Figure 34. Equivalent Analog Current Output

The DAC5674 can be easily configured to drive a doubly terminated 50-Ω cable using a properly selected RF transformer. Figure 35 and Figure 36 show the 50-Ω doubly terminated transformer configuration with 1:1 and 4:1 impedance ratio, respectively. Note that the center tap of the primary input of the transformer has to be grounded to enable a dc current flow. Applying a 20-mA full-scale output current would lead to a 0.5 V_{PP} for a 1:1 transformer and a 1 V_{PP} output for a 4:1 transformer.

Figure 37 shows the single-ended output configuration, where the output current IOUT1 flows into an equivalent load resistance of 25 Ω. Node IOUT2 should be connected to AGND or terminated with a resistor of 25 Ω to AGND. The nominal resistor load of 25 Ω gives a differential output swing of 1 V_{PP} when applying a 20-mA full-scale output current.

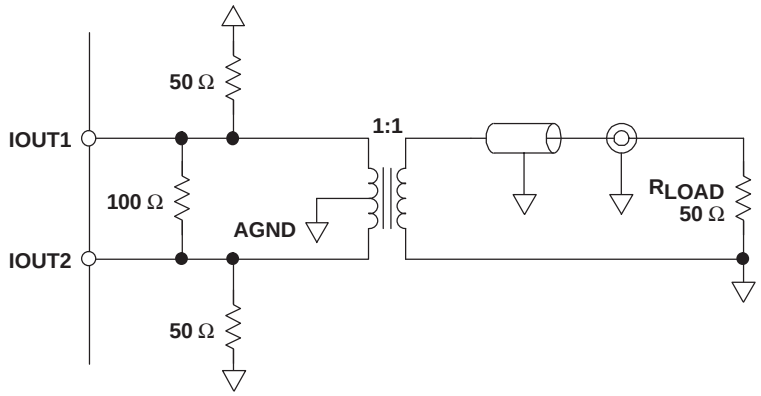

Figure 35. Driving a Doubly Terminated 50-Ω Cable Using a 1:1 Impedance Ratio Transformer

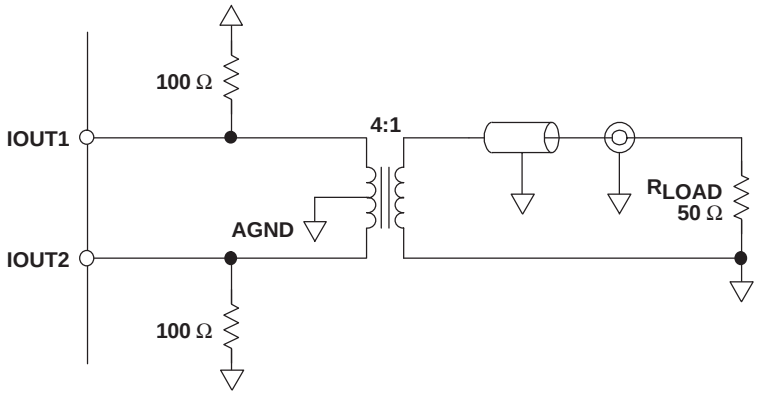

Figure 36. Driving a Doubly Terminated 50-Ω Cable Using a 4:1 Impedance Ratio Transformer

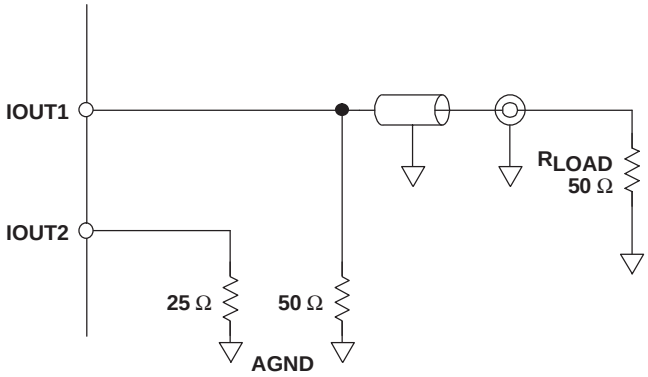

Figure 37. Driving a Doubly Terminated 50-Ω Cable Using Single-Ended Output

Sleep Mode

The DAC5674 features a power-down mode that turns off the output current and reduces the supply current to less than 5 mA over the supply range of 3 V to 3.6 V and temperature range. The power-down mode is activated by applying a logic level 1 to the SLEEP pin (e.g., by connecting pin SLEEP to AVDD). An internal pulldown circuit at node SLEEP ensures that the DAC5674 is enabled if the input is left disconnected. Power-up and power-down activation times depend on the value of external capacitor at node EXTIO. For a nominal capacitor value of 0.1-µF power-down takes less than 5 µs, and power-up takes approximately 3 ms. With external reference, power up takes 10 µs; power down remains the same.

DAC5674 Evaluation Board

A combo EVM board is available for the DAC5674 digital-to-analog converter for evaluation. This board allows the user the flexibility to operate the DAC5674 in various configurations. Possible output configurations include transformer coupled, resistor terminated, inverting/noninverting and differential amplifier outputs. The digital inputs are designed to interface with a TMS320 DSP SDK or to be driven directly from various pattern generators with the onboard option to add a resistor network for proper load termination. See the *DAC5674 EVM User's Guide* (SWRU007) for more information.

DESIGNING THE PLL LOOP FILTER

The DAC5674 contains an external loop filter to set the bandwidth and phase margin of the PLL. For the external second-order filter shown in Figure 38, the components R1, C1, and C2 are set by the user to optimize the PLL for the application. The resistance R3 = 200 Ω. and the capacitance C3 = 8 pF are internal to the DAC5674. Note that R1 and C1 can be reversed.

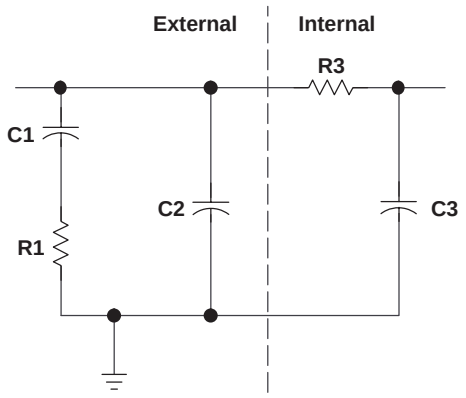

Figure 38. DAC5674 Loop Filter

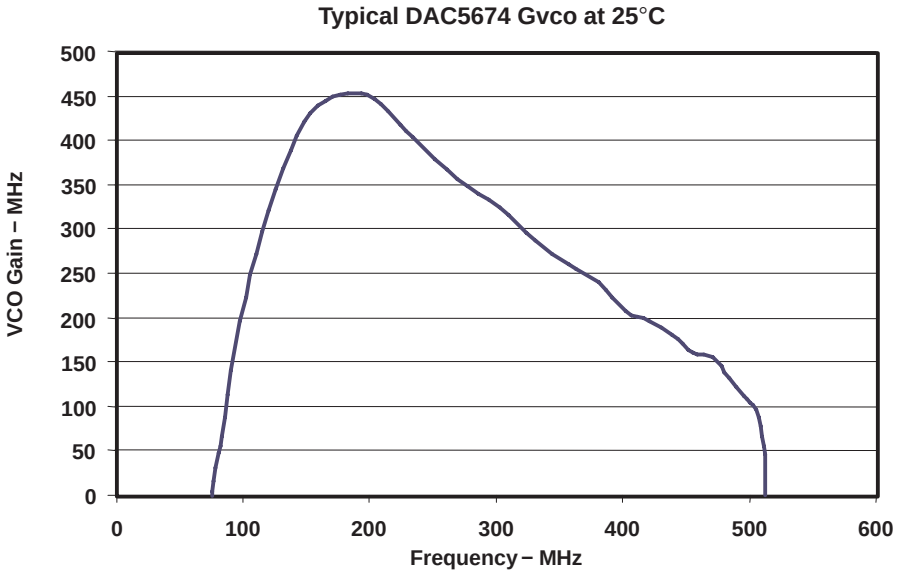

Figure 39. Typical VCO Gain vs VCO Frequency at 25°C

The typical VCO gain (Gvco) (the slope of VCO frequency vs voltage) as a function of VCO frequency for the DAC5674 is shown in Figure 39. For the lowest possible phase noise, the VCO frequency should be chosen so Gvco is minimized, where

Fvco = Fdata × Interpolation × PLL Divider:

For example, if Fdata = 100 MSPS and 2× interpolation is used, the PLL divider should be set to 2 to lock the VCO at 400 MHz for a typical Gvco of 210 MHz/V. Note that the maximum specified VCO frequency range is 160 MHz to 400 MHz.

The external loop filter components C1, C2, and R1 are given by choosing Gvco, N = Fvco/Fdata, the loop phase margin ϕ_d and the loop bandwidth ω_d. Except for applications where abrupt clock frequency changes require a fast PLL lock time, it is suggested that ϕ_d be set to at least 80 degrees for stable locking and suppression of the phase noise side lobes. Phase margins of 60 degrees or less have occasionally been sensitive to board layout and decoupling details.

The optimum loop bandwidth ω_d depends on both the VCO phase noise, which is largely a function of Gvco, and the application. For the foregoing example with Gvco = 210 MHz/V, an ω_d = 1 MHz would be typical, but lower and higher loop bandwidths may provide better phase-noise characteristics. For a higher Gvco, for example Gvco = 400 MHz/V, a $\omega_d \approx 7$ MHz would be typical. However, it is suggested that the customer experiment with varying the loop bandwidth by at least 1/2× through 2× to verify the optimum setting.

C1, C2, and R1 are then calculated by the following equations:

$$C1 = \tau 1\left(1-\frac{\tau 2}{\tau 3}\right) \qquad C2 = \frac{\tau 1-\tau 2}{\tau 3} \qquad R1 = \frac{\tau 3^2}{\tau 1(\tau 3 - \tau 2)}$$

where

$$\tau 1 = \frac{K_d K_{vco}}{\omega_d^2}\left(\tan\phi_d + \sec\phi_d\right) \qquad \tau 2 = \frac{1}{\omega_d\left(\tan\phi_d + \sec\phi_d\right)} \qquad \tau 3 = \frac{\tan\phi_d + \sec\phi_d}{\omega_d}$$

and

charge pump current:	iqp = 1 mA
vco gain:	Kvco = $2\pi \times$ Gvco rad/V
Fvco/Fdata:	N = {2, 4, 8, 16, 32}
phase detector gain:	Kd = iqp $\times (2\pi N)^{-1}$ A/rad

An Excel™ spreadsheet is provided by TI for automatically calculating the values for C1, C2, and R.

Completing the preceding example with

PARAMETER	VALUE	UNIT
Gvco	2.10E+02	MHz/V
ω_d	1.00E+00	MHz
N	4	
ϕ_d	80	degrees

the component values are

C1 (F)	C2 (F)	R (Ω)
1.51E−08	1.16E−10	1.21E+02

As the PLL characteristics are not sensitive to these components, the closest 20% tolerance capacitor and 1% tolerance resistor values can be used. If the calculation results in a negative value for C2 or an unrealistically large value for C1, then the phase margin may need to be reduced slightly.

USING PowerPAD DEVICES

A thermal land should be placed on the top and bottom layers of the circuit board. The recommended thermal land size for this package is 5 mm × 5 mm, with top and bottom layers connected by 9 vias. A thermal land size of 3,8 mm × 3,8 mm (as used on the DAC5674 EVM) is adequate for this device.

REVISION HISTORY

DATE	REV	PAGE	SECTION	DESCRIPTION
Aug. 2005	A	10–12	Typical Characteristics	Added a note that ac measurements are taken with the PLL off
		15	Low-Pass/Low-Pass 4× Interpolation Filter Operation	Updated the filter mode diagrams with more-realistic response
		16	Low-Pass/High-Pass 4× Interpolation Filter Operation	
		17	High-Pass/Low-Pass 4× Interpolation Filter Operation	
		18	High-Pass/High-Pass 4× Interpolation Filter Operation	
		18	DAC Sinx/x Output Attenuation	Added this new section
		26	DAC Transfer Function	Updated DAC transfer equation with a more-accurate model
		29	Sleep Mode	Corrected a word and added a sentence
		30	PLL Loop Filter Components	Replaced with a new section, Designing the PLL Loop Filter

PACKAGING INFORMATION

Orderable part number	Status (1)	Material type (2)	Package | Pins	Package qty | Carrier	RoHS (3)	Lead finish/ Ball material (4)	MSL rating/ Peak reflow (5)	Op temp (°C)	Part marking (6)
DAC5674IPHP	Active	Production	HTQFP (PHP) | 48	250 | JEDEC TRAY (10+1)	Yes	NIPDAU	Level-3-260C-168 HR	-40 to 85	DAC5674
DAC5674IPHP.A	Active	Production	HTQFP (PHP) | 48	250 | JEDEC TRAY (10+1)	Yes	NIPDAU	Level-3-260C-168 HR	-40 to 85	DAC5674
DAC5674IPHPG4	Active	Production	HTQFP (PHP) | 48	250 | JEDEC TRAY (10+1)	Yes	NIPDAU	Level-3-260C-168 HR	-40 to 85	DAC5674
DAC5674IPHPR	Active	Production	HTQFP (PHP) | 48	1000 | LARGE T&R	Yes	NIPDAU	Level-3-260C-168 HR	-40 to 85	DAC5674
DAC5674IPHPR.A	Active	Production	HTQFP (PHP) | 48	1000 | LARGE T&R	Yes	NIPDAU	Level-3-260C-168 HR	-40 to 85	DAC5674

(1) **Status:** For more details on status, see our product life cycle.

(2) **Material type:** When designated, preproduction parts are prototypes/experimental devices, and are not yet approved or released for full production. Testing and final process, including without limitation quality assurance, reliability performance testing, and/or process qualification, may not yet be complete, and this item is subject to further changes or possible discontinuation. If available for ordering, purchases will be subject to an additional waiver at checkout, and are intended for early internal evaluation purposes only. These items are sold without warranties of any kind.

(3) **RoHS values:** Yes, No, RoHS Exempt. See the TI RoHS Statement for additional information and value definition.

(4) **Lead finish/Ball material:** Parts may have multiple material finish options. Finish options are separated by a vertical ruled line. Lead finish/Ball material values may wrap to two lines if the finish value exceeds the maximum column width.

(5) **MSL rating/Peak reflow:** The moisture sensitivity level ratings and peak solder (reflow) temperatures. In the event that a part has multiple moisture sensitivity ratings, only the lowest level per JEDEC standards is shown. Refer to the shipping label for the actual reflow temperature that will be used to mount the part to the printed circuit board.

(6) **Part marking:** There may be an additional marking, which relates to the logo, the lot trace code information, or the environmental category of the part.

Multiple part markings will be inside parentheses. Only one part marking contained in parentheses and separated by a "~" will appear on a part. If a line is indented then it is a continuation of the previous line and the two combined represent the entire part marking for that device.

Important Information and Disclaimer: The information provided on this page represents TI's knowledge and belief as of the date that it is provided. TI bases its knowledge and belief on information provided by third parties, and makes no representation or warranty as to the accuracy of such information. Efforts are underway to better integrate information from third parties. TI has taken and continues to take reasonable steps to provide representative and accurate information but may not have conducted destructive testing or chemical analysis on incoming materials and chemicals. TI and TI suppliers consider certain information to be proprietary, and thus CAS numbers and other limited information may not be available for release.

In no event shall TI's liability arising out of such information exceed the total purchase price of the TI part(s) at issue in this document sold by TI to Customer on an annual basis.

TAPE AND REEL INFORMATION

REEL DIMENSIONS

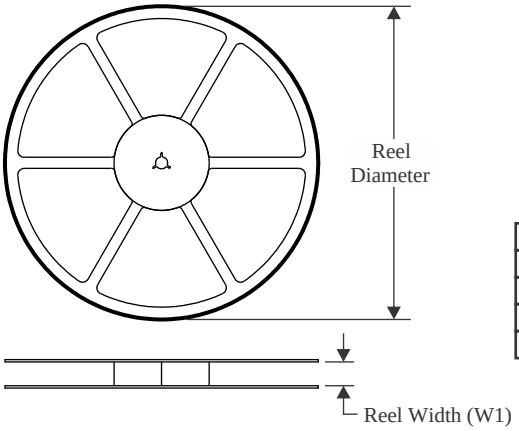

TAPE DIMENSIONS

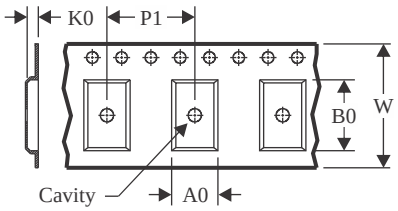

A0	Dimension designed to accommodate the component width
B0	Dimension designed to accommodate the component length
K0	Dimension designed to accommodate the component thickness
W	Overall width of the carrier tape
P1	Pitch between successive cavity centers

QUADRANT ASSIGNMENTS FOR PIN 1 ORIENTATION IN TAPE

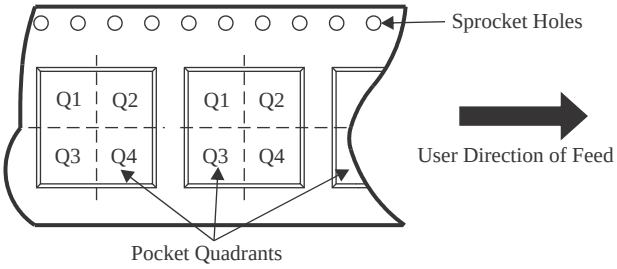

*All dimensions are nominal

Device	Package Type	Package Drawing	Pins	SPQ	Reel Diameter (mm)	Reel Width W1 (mm)	A0 (mm)	B0 (mm)	K0 (mm)	P1 (mm)	W (mm)	Pin1 Quadrant
DAC5674IPHPR	HTQFP	PHP	48	1000	330.0	16.4	9.6	9.6	1.5	12.0	16.0	Q2

TAPE AND REEL BOX DIMENSIONS

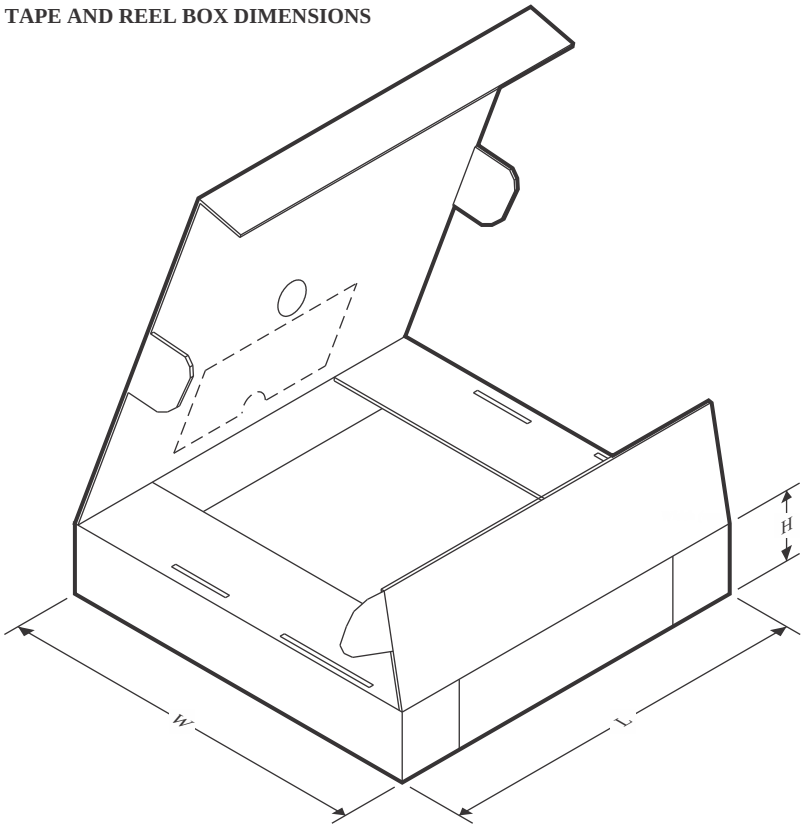

*All dimensions are nominal

Device	Package Type	Package Drawing	Pins	SPQ	Length (mm)	Width (mm)	Height (mm)
DAC5674IPHPR	HTQFP	PHP	48	1000	350.0	350.0	43.0

TRAY

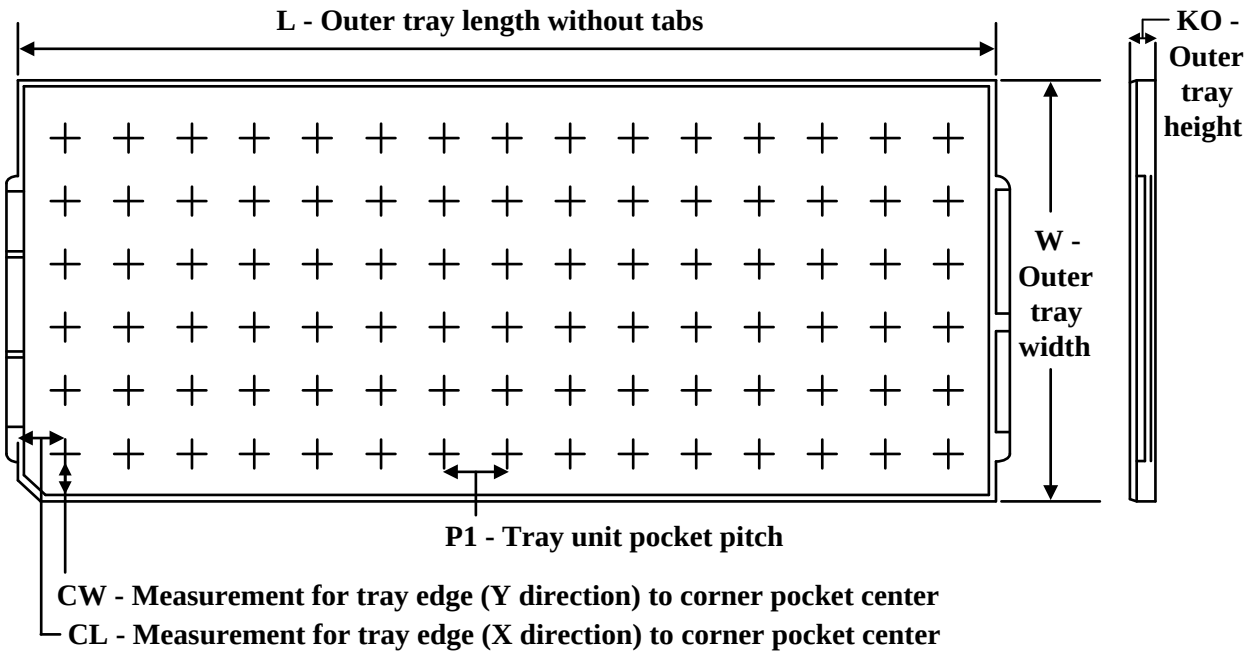

Chamfer on Tray corner indicates Pin 1 orientation of packed units.

*All dimensions are nominal

Device	Package Name	Package Type	Pins	SPQ	Unit array matrix	Max temperature (°C)	L (mm)	W (mm)	K0 (µm)	P1 (mm)	CL (mm)	CW (mm)
DAC5674IPHP	PHP	HTQFP	48	250	10 x 25	150	315	135.9	7620	12.2	11.1	11.25
DAC5674IPHP.A	PHP	HTQFP	48	250	10 x 25	150	315	135.9	7620	12.2	11.1	11.25
DAC5674IPHPG4	PHP	HTQFP	48	250	10 x 25	150	315	135.9	7620	12.2	11.1	11.25

GENERIC PACKAGE VIEW

PHP 48

TQFP - 1.2 mm max height

7 x 7, 0.5 mm pitch

QUAD FLATPACK

This image is a representation of the package family, actual package may vary.
Refer to the product data sheet for package details.

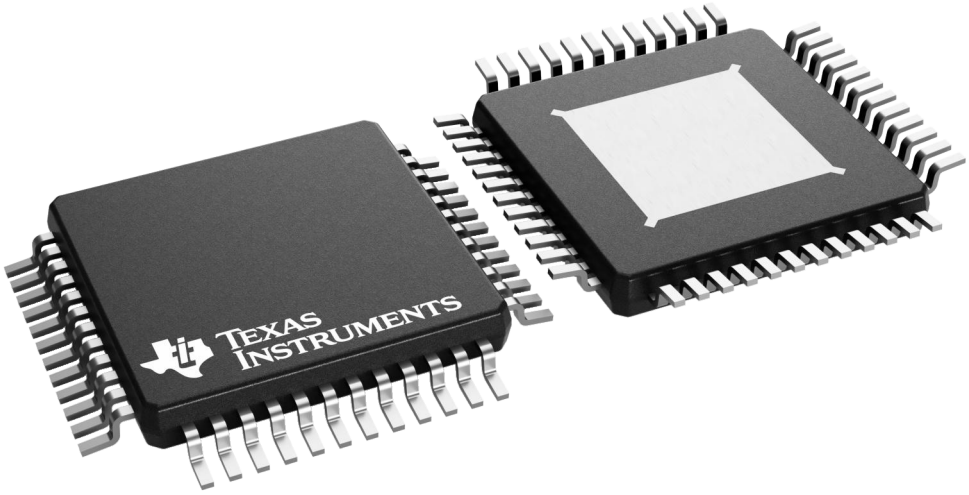

4226443/A

PHP (S–PQFP–G48) PowerPAD™ PLASTIC QUAD FLATPACK

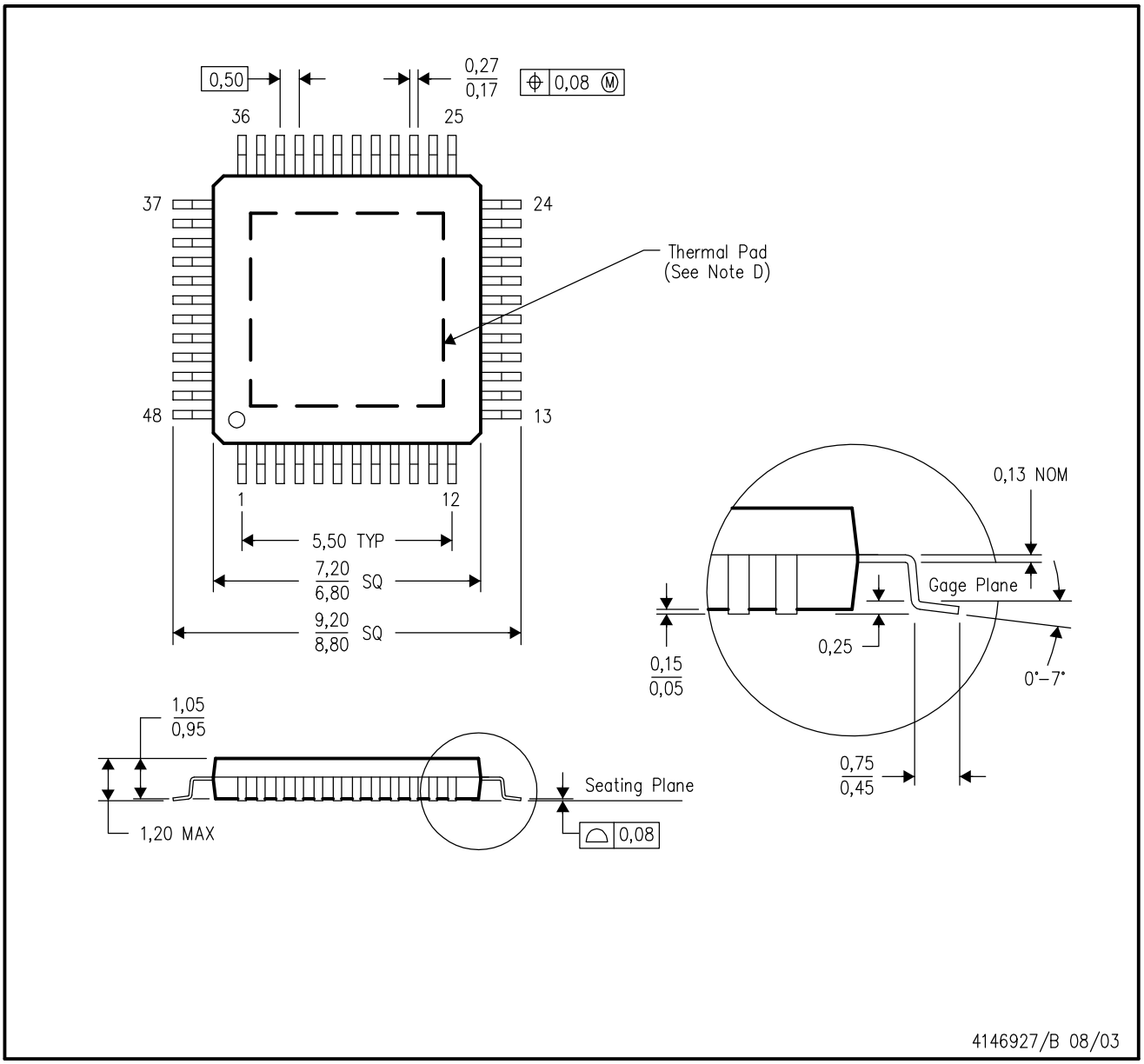

NOTES:
- A. All linear dimensions are in millimeters.
- B. This drawing is subject to change without notice.
- C. Body dimensions do not include mold flash or protrusion
- D. This package is designed to be soldered to a thermal pad on the board. Refer to Technical Brief, PowerPad Thermally Enhanced Package, Texas Instruments Literature No. SLMA002 for information regarding recommended board layout. This document is available at www.ti.com <http://www.ti.com>.
- E. Falls within JEDEC MS–026

PowerPAD is a trademark of Texas Instruments.

PHP (S–PQFP–G48) PowerPAD™ PLASTIC QUAD FLATPACK

THERMAL INFORMATION

This PowerPAD™ package incorporates an exposed thermal pad that is designed to be attached to a printed circuit board (PCB). The thermal pad must be soldered directly to the PCB. After soldering, the PCB can be used as a heatsink. In addition, through the use of thermal vias, the thermal pad can be attached directly to the appropriate copper plane shown in the electrical schematic for the device, or alternatively, can be attached to a special heatsink structure designed into the PCB. This design optimizes the heat transfer from the integrated circuit (IC).

For additional information on the PowerPAD package and how to take advantage of its heat dissipating abilities, refer to Technical Brief, PowerPAD Thermally Enhanced Package, Texas Instruments Literature No. SLMA002 and Application Brief, PowerPAD Made Easy, Texas Instruments Literature No. SLMA004. Both documents are available at www.ti.com.

The exposed thermal pad dimensions for this package are shown in the following illustration.

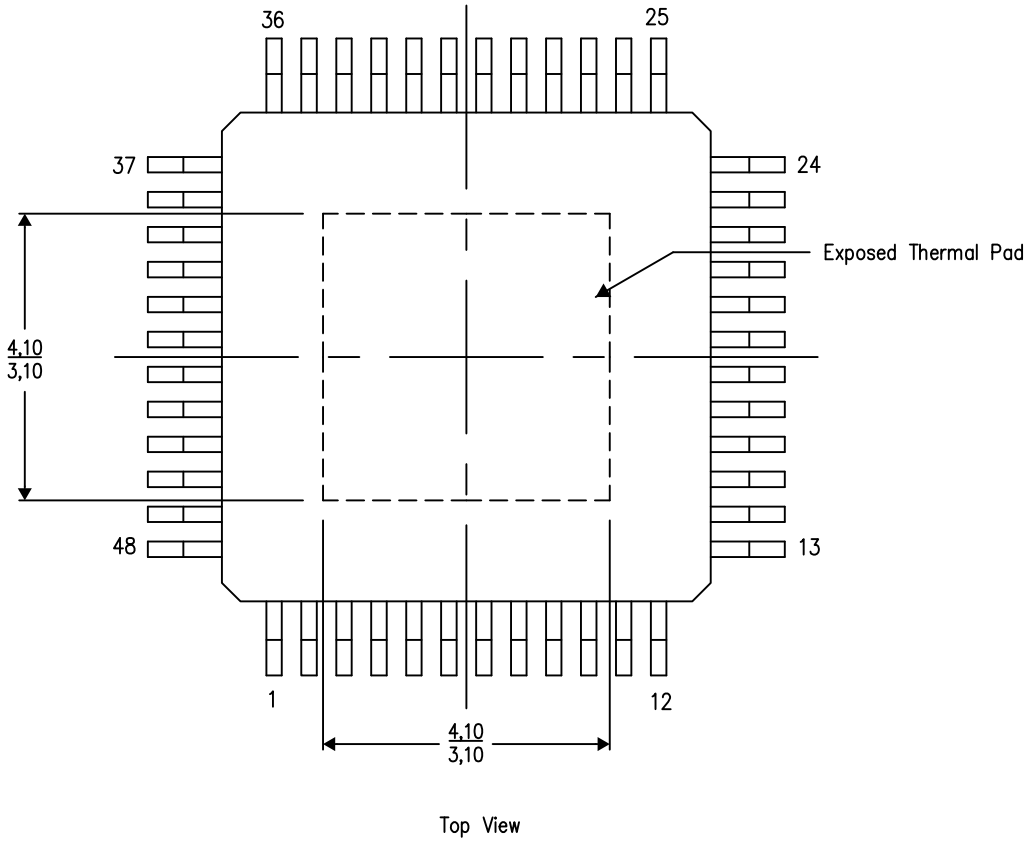

Exposed Thermal Pad Dimensions

4206329–3/P 03/15

NOTE: A. All linear dimensions are in millimeters

PowerPAD is a trademark of Texas Instruments

PHP (S–PQFP–G48) PowerPAD™ PLASTIC QUAD FLATPACK

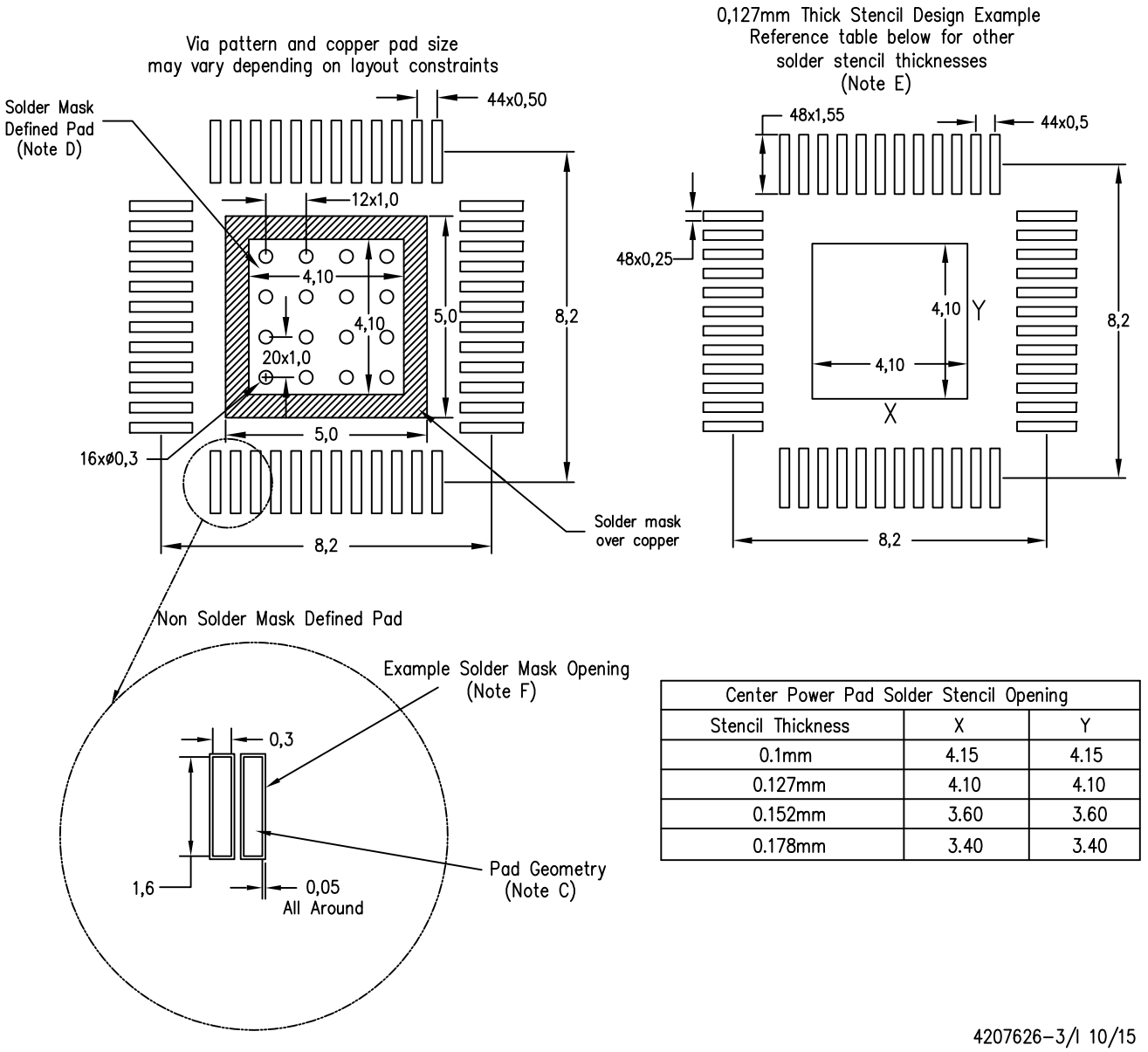

Center Power Pad Solder Stencil Opening		
Stencil Thickness	X	Y
0.1mm	4.15	4.15
0.127mm	4.10	4.10
0.152mm	3.60	3.60
0.178mm	3.40	3.40

NOTES:
- A. All linear dimensions are in millimeters.
- B. This drawing is subject to change without notice.
- C. Publication IPC–7351 is recommended for alternate designs.
- D. This package is designed to be soldered to a thermal pad on the board. Refer to Technical Brief, PowerPad Thermally Enhanced Package, Texas Instruments Literature No. SLMA002, SLMA004, and also the Product Data Sheets for specific thermal information, via requirements, and recommended board layout. These documents are available at www.ti.com <http://www.ti.com>.
- E. Laser cutting apertures with trapezoidal walls and also rounding corners will offer better paste release. Customers should contact their board assembly site for stencil design recommendations. Refer to IPC 7525 for stencil design considerations.
- F. Customers should contact their board fabrication site for recommended solder mask tolerances and via tenting options for vias placed in the thermal pad.

PowerPAD is a trademark of Texas Instruments

IMPORTANT NOTICE AND DISCLAIMER

TI PROVIDES TECHNICAL AND RELIABILITY DATA (INCLUDING DATA SHEETS), DESIGN RESOURCES (INCLUDING REFERENCE DESIGNS), APPLICATION OR OTHER DESIGN ADVICE, WEB TOOLS, SAFETY INFORMATION, AND OTHER RESOURCES “AS IS” AND WITH ALL FAULTS, AND DISCLAIMS ALL WARRANTIES, EXPRESS AND IMPLIED, INCLUDING WITHOUT LIMITATION ANY IMPLIED WARRANTIES OF MERCHANTABILITY, FITNESS FOR A PARTICULAR PURPOSE OR NON-INFRINGEMENT OF THIRD PARTY INTELLECTUAL PROPERTY RIGHTS.

These resources are intended for skilled developers designing with TI products. You are solely responsible for (1) selecting the appropriate TI products for your application, (2) designing, validating and testing your application, and (3) ensuring your application meets applicable standards, and any other safety, security, regulatory or other requirements.

These resources are subject to change without notice. TI grants you permission to use these resources only for development of an application that uses the TI products described in the resource. Other reproduction and display of these resources is prohibited. No license is granted to any other TI intellectual property right or to any third party intellectual property right. TI disclaims responsibility for, and you will fully indemnify TI and its representatives against, any claims, damages, costs, losses, and liabilities arising out of your use of these resources.

TI’s products are provided subject to TI’s Terms of Sale or other applicable terms available either on ti.com or provided in conjunction with such TI products. TI’s provision of these resources does not expand or otherwise alter TI’s applicable warranties or warranty disclaimers for TI products.

TI objects to and rejects any additional or different terms you may have proposed.

Mailing Address: Texas Instruments, Post Office Box 655303, Dallas, Texas 75265
Copyright © 2025, Texas Instruments Incorporated