UCC23511 1.5-A Source, 2-A Sink, 5.7-kV$_{RMS}$ Opto-Compatible Single-Channel Isolated Gate Driver

1 Features

- 5.7-kV$_{RMS}$ single channel isolated gate driver with opto-compatible input
- Pin-to-pin, drop in upgrade for opto isolated gate drivers
- 1.5-A source / 2-A sink, peak output current
- Maximum 33-V output driver supply voltage
- 8-V (B) or 12-V VCC UVLO Options
- Rail-to-rail output
- 105-ns (maximum) propagation delay
- 25-ns (maximum) part-to-part delay matching
- 35-ns (maximum) pulse width distortion
- 150-kV/µs (minimum) common-mode transient immunity (CMTI)
- Isolation barrier life >50 Years
- 13-V reverse polarity voltage handling capability on input stage supporting interlock
- Stretched SO-6 package with >8.5-mm creepage and clearance
- Operating junction temperature, T_J: –40°C to +150°C
- Safety-related certifications (Planned):
  - 5.7-kV$_{RMS}$ isolation for 1 minute per UL 1577
  - 8000-V$_{PK}$reinforced isolation per DIN V VDE V0884-11: 2017-01
  - CQC certification per GB4943.1-2011

2 Applications

- Industrial motor-control drives
- Industrial power supplies, UPS
- Solar inverters
- Induction heating

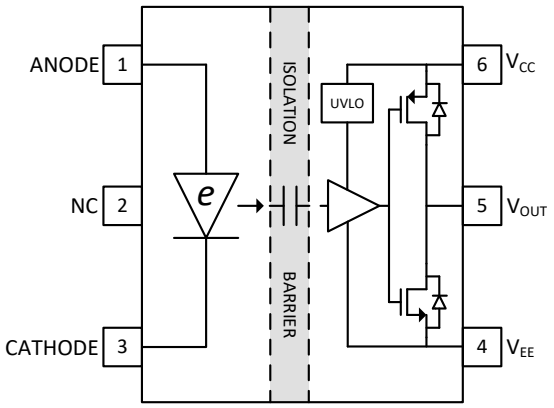

Functional Block Diagram of UCC23511 (SO6)

3 Description

The UCC23511 is an Opto-compatible, single-channel, isolated gate driver for IGBTs, MOSFETs and SiC MOSFETs, with 1.5-A source and 2-A sink peak output current and 5.7-kV$_{RMS}$ reinforced isolation rating. The high supply voltage range of 33-V allows the use of bipolar supplies to effectively drive IGBTs and SiC power FETs. UCC23511 can drive both low side and high side power FETs. Key features and characteristics bring significant performance and reliability upgrades over standard opto-coupler based gate drivers while maintaining pin-to-pin compatibility in both schematic and layout design. Performance highlights include high common mode transient immunity (CMTI), low propagation delay, and small pulse width distortion. Tight process control results in small part-to-part skew. The input stage is an emulated diode (ediode) which means long term reliability and excellent aging characteristics compared to traditional LEDs. It is offered in a stretched SO6 package with >8.5mm creepage and clearance, and a mold compound from material group I which has a comparative tracking index (CTI) >600V. UCC23511's high performance and reliability makes it ideal for use in all types of motor drives, solar inverters, industrial power supplies, and appliances. The higher operating temperature opens up opportunities for applications not previously able to be supported by traditional optocouplers.

Device Information (1)

PART NUMBER	PACKAGE	BODY SIZE (NOM)
UCC23511	Stretched SO-6	7.5 mm x 4.68 mm

(1) For all available packages, see the orderable addendum at the end of the data sheet.

An IMPORTANT NOTICE at the end of this data sheet addresses availability, warranty, changes, use in safety-critical applications, intellectual property matters and other important disclaimers. PRODUCTION DATA.

Table of Contents

1 Features....1
2 Applications....1
3 Description....1
4 Revision History....2
5 Pin Configuration and Function....3
Pin Functions....3
6 Specifications....4
6.1 Absolute Maximum Ratings....4
6.2 ESD Ratings....4
6.3 Recommended Operating Conditions....4
6.4 Thermal Information....4
6.5 Power Ratings....5
6.6 Insulation Specifications....6
6.7 Safety-Related Certifications....7
6.8 Safety Limiting Values....7
6.9 Electrical Characteristics....8
6.10 Switching Characteristics....9
6.11 Insulation Characteristics Curves....9
6.12 Typical Characteristics....11
7 Parameter Measurement Information....14
7.1 Propagation Delay, rise time and fall time....14
7.2 I_{OH} and I_{OL} testing....14
7.3 CMTI Testing....14
8 Detailed Description....15
8.1 Overview....15
8.2 Functional Block Diagram....16
8.3 Feature Description....16
8.4 Device Functional Modes....20
9 Application and Implementation....21
9.1 Application Information....21
9.2 Typical Application....22
10 Power Supply Recommendations....28
11 Layout....29
11.1 Layout Guidelines....29
11.2 Layout Example....30
11.3 PCB Material....33
11.4 Custom Design With WEBENCH® Tools....33
12 Mechanical, Packaging, and Orderable Information....34

4 Revision History

NOTE: Page numbers for previous revisions may differ from page numbers in the current version.

Changes from Revision A (October 2019) to Revision B (October 2020)	Page
• Added UCC23511B orderble to include 8-V UVLO option	8

Changes from Revision * (September 2019) to Revision A (October 2019)	Page
• Changed marketing status from Advance Information to Initial Release	1

Copyright © 2020 Texas Instruments Incorporated

5 Pin Configuration and Function

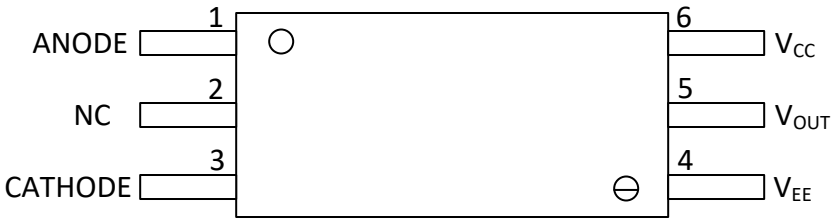

Figure 5-1. UCC23511 Package SO-6 Top View

Pin Functions

PIN		TYPE[(1)]	DESCRIPTION
NAME	NO.		
	UCC23511		
ANODE	1	I	Anode
CATHODE	3	I	Cathode
NC	2	-	No Connection
V_{CC}	6	P	Positive output supply rail
V_{EE}	4	P	Negative output supply rail
V_{OUT}	5	O	Gate-drive output

(1) P = Power, G = Ground, I = Input, O = Output

Copyright © 2020 Texas Instruments Incorporated

6 Specifications

6.1 Absolute Maximum Ratings

Over operating free air temperature range (unless otherwise noted)[1]

		MIN	MAX	UNIT
Average Input Current	$I_{F(AVG)}$	-	25	mA
Peak Transient Input Current	$I_{F(TRAN)}$ <1us pulse, 300pps		1	A
Reverse Input Voltage	$V_{R(MAX)}$		14	V
Output supply voltage	$V_{CC} – V_{EE}$	-0.3	35	V
Output signal voltage	$V_{OUT} – V_{CC}$		0.3	V
Output signal voltage	$V_{OUT} – V_{EE}$	-0.3		V
Junction temperature	T_J [2]	-40	150	°C
Storage temperature	T_{stg}	-65	150	°C

(1) Stresses beyond those listed under *Absolute Maximum Ratings* may cause permanent damage to the device. These are stress ratings only, which do not imply functional operation of the device at these or any other conditions beyond those indicated under *Recommended Operating Conditions*. Exposure to absolute-maximum-rated conditions for extended periods may affect device reliability.

(2) To maintain the recommended operating conditions for T_J, see the *Section 6.4* section.

6.2 ESD Ratings

			VALUE	UNIT
$V_{(ESD)}$	Electrostatic discharge	Human body model (HBM), per ANSI/ESDA/JEDEC JS–001[1]	±4000	V
		Charged device model (CDM), per JEDEC specification JESD22-C101[2]	±1000	

(1) JEDEC document JEP155 states that 500-V HBM allows safe manufacturing with a standard ESD control process.

(2) JEDEC document JEP157 states that 250-V CDM allows safe manufacturing with a standard ESD control process.

6.3 Recommended Operating Conditions

Over operating free-air temperature range (unless otherwise noted)

			MIN	NOM	MAX	UNIT
V_{CC}	Output Supply Voltage($V_{CC} – V_{EE}$)	UCC23511 (12-V UVLO Version)	14		33	V
V_{CC}	Output Supply Voltage($V_{CC} – V_{EE}$)	UCC23511B (8-V UVLO Version)	10		33	V
I_F (ON)	Input Diode Forward Current (Diode "ON")		7		16	mA
V_F (OFF)	Anode voltage - Cathode voltage (Diode "OFF")		-13		0.9	V
T_J	Junction temperature		-40		150	°C
T_A	Ambient temperature		-40		125	°C

6.4 Thermal Information

THERMAL METRIC[1]		UCC23511 SO6 6 Pins	UNIT
$R_{θJA}$	Junction-to-ambient thermal resistance	126	°C/W
$R_{θJC(top)}$	Junction-to-case (top) thermal resistance	66.1	°C/W
$R_{θJB}$	Junction-to-board thermal resistance	62.8	°C/W
$Ψ_{JT}$	Junction-to-top characterization parameter	29.6	°C/W
$Ψ_{JB}$	Junction-to-board characterization parameter	60.8	°C/W

(1) For more information about traditional and new thermal metrics, see the http://www.ti.com/lit/SPRA953 application report.

Copyright © 2020 Texas Instruments Incorporated

6.5 Power Ratings

PARAMETER		TEST CONDITIONS	MIN	TYP	MAX	UNIT
P_D	Maximum power dissipation on input and output	V_{CC} = 20 V, I_F= 10mA 10-kHz, 50% duty cycle, square wave,180-nF load, T_A=25ºC			750	mW
P_{D1}	Maximum input power dissipation(1)				10	mW
P_{D2}	Maximum output power dissipation				740	mW

(1) Recommended maximum PD1 = 40mW. Absolute maximum PD1 = 55mW

6.6 Insulation Specifications

PARAMETER		TEST CONDITIONS	SPECIFICATION	UNIT
CLR	External clearance(1)	Shortest terminal-to-terminal distance through air	>8.5	mm
CPG	External Creepage(1)	Shortest terminal-to-terminal distance across the package surface	>8.5	mm
DTI	Distance through the insulation	Minimum internal gap (internal clearance)	>17	µm
CTI	Comparative tracking index	DIN EN 60112 (VDE 0303-11); IEC 60112	>600	V
	Material Group	According to IEC 60664-1	I	
	Overvoltage category per IEC 60664-1	Rated mains voltage ≤ 600 V_{RMS}	I-IV	
		Rated mains voltage ≤ 1000 V_{RMS}	I-III	
DIN V VDE 0884-11 (VDE V 0884-11)(2)				
V_{IORM}	Maximum repetitive peak isolation voltage	AC voltage (bipolar)	2121	V_{PK}
V_{IOWM}	Maximum isolation working voltage	AC voltage (sine wave); time-dependent dielectric breakdown (TDDB) test; see Figure 1	1500	V_{RMS}
		DC voltage	2121	V_{DC}
V_{IOTM}	Maximum transient isolation voltage	$V_{TEST} = V_{IOTM}$, t = 60 sec (qualification) $V_{TEST} = 1.2 \times V_{IOTM}$, t = 1 s (100% production)	8000	V_{PK}
V_{IOSM}	Maximum surge isolation voltage(3)	Test method per IEC 62368, 1.2/50 ms waveform, $V_{TEST} = 1.6 \times V_{IOSM} = 12800\ V_{PK}$ (qualification)	8000	V_{PK}
q_{pd}	Apparent charge(4)	Method a: After I/O safety test subgroup 2/3, $V_{ini} = V_{IOTM}$, t_{ini} = 60 s; $V_{pd(m)} = 1.2 \times V_{IORM} = 1800\ V_{PK}$, t_m = 10 s	≤5	pC
		Method a: After environmental tests subgroup 1, $V_{ini} = V_{IOTM}$, t_{ini} = 60 s; $V_{pd(m)} = 1.6 \times V_{IORM} = 2400\ V_{PK}$, t_m = 10 s	≤5	
		Method b1: At routine test (100% production) and preconditioning (type test), $V_{ini} = V_{IOTM}$, t_{ini} = 1 s; $V_{pd(m)} = 1.875 \times V_{IORM} = 2813\ V_{PK}$, t_m = 1 s	≤5	
C_{IO}	Barrier capacitance, input to output(5)	$V_{IO} = 0.4 \times \sin(2\pi ft)$, f = 1 MHz	0.5	pF
R_{IO}	Insulation resistance, input to output(5)	V_{IO} = 500 V, T_A = 25°C	$>10^{12}$	Ω
		V_{IO} = 500 V, 100°C ≤ T_A ≤ 125°C	$>10^{11}$	
		V_{IO} = 500 V at T_S = 150°C	$>10^{9}$	
	Pollution degree		2	
	Climatic category		40/125/21	
UL 1577				
V_{ISO}	Withstand isolation voltage	$V_{TEST} = V_{ISO}$ = 5700 V_{RMS}, t = 60 s (qualification), $V_{TEST} = 1.2 \times V_{ISO}$ = 6840 V_{RMS}, t = 1 s (100% production)	5700	V_{RMS}

(1) Creepage and clearance requirements should be applied according to the specific equipment isolation standards of an application. Care should be taken to maintain the creepage and clearance distance of a board design to ensure that the mounting pads of the isolator on the printed-circuit board do not reduce this distance. Creepage and clearance on a printed-circuit board become equal in certain cases. Techniques such as inserting grooves, ribs, or both on a printed-circuit board are used to help increase these specifications.

(2) This coupler is suitable for *safe electrical insulation* only within the safety ratings. Compliance with the safety ratings shall be ensured by means of suitable protective circuits.

(3) Testing is carried out in air or oil to determine the intrinsic surge immunity of the isolation barrier.

(4) Apparent charge is electrical discharge caused by a partial discharge (pd).

(5) All pins on each side of the barrier tied together creating a two-pin device.

Copyright © 2020 Texas Instruments Incorporated

6.7 Safety-Related Certifications

VDE	UL	CQC
Plan to certify according to DIN V VDE V 0884-11: 2017-01	Plan to certify according to UL 1577 Component Recognition Program	Plan to certify according to GB4943.1-2011
Reinforced insulation Maximum transient isolation voltage, 8000 V_{PK}; Maximum repetitive peak isolation voltage, 2121 V_{PK}; Maximum surge isolation voltage, 8000 V_{PK}	Single protection, 5700 V_{RMS}	Reinforced insulation, Altitude ≤ 5000 m, Tropical Climate
Certificate planned(1)	File number: E181974(1)	Certificate planned(1)

(1) UCC23511B certification in progress

6.8 Safety Limiting Values

PARAMETER		TEST CONDITIONS	MIN	TYP	MAX	UNIT
I_S	Safety input, output, or supply current	R_{qJA} = 126°C/W, V_I = 15 V, T_J = 150°C, T_A = 25°C			50	mA
		R_{qJA} = 126°C/W, V_I = 30 V, T_J = 150°C, T_A = 25°C			25	
P_S	Safety input, output, or total power	R_{qJA} = 126°C/W, T_J = 150°C, T_A = 25°C			750	mW
T_S	Maximum safety temperature(1)				150	°C

(1) The maximum safety temperature, T_S, has the same value as the maximum junction temperature, T_J , specified for the device. The I_S and P_S parameters represent the safety current and safety power respectively. The maximum limits of I_S and P_S should not be exceeded. These limits vary with the ambient temperature, T_A. The junction-to-air thermal resistance, R_{qJA}, in the Thermal Information table is that of a device installed on a high-K test board for leaded surface-mount packages. Use these equations to calculate the value for each parameter: $T_J = T_A + R_{qJA} \times P$, where P is the power dissipated in the device. $T_{J(max)} = T_S = T_A + R_{qJA} \times P_S$, where $T_{J(max)}$ is the maximum allowed junction temperature. $P_S = I_S \times V_I$, where VI is the maximum supply voltage.

6.9 Electrical Characteristics

Unless otherwise noted, all typical values are at T_A = 25°C, V_{CC}–V_{EE}= 15V, V_{EE}= GND. All min and max specifications are at recommended operating conditions (T_J = -40C to 150°C, $I_{F(on)}$= 7 mA to 16 mA, V_{EE}= GND, V_{CC}= 15 V to 30 V, $V_{F(off)}$= –5V to 0.8V)

PARAMETER		TEST CONDITIONS	MIN	TYP	MAX	UNIT
INPUT						
I_{FLH}	Input Forward Threshold Current Low to High	V_{OUT} > 5 V, Cg = 1 nF	1.5	2.8	4	mA
V_F	Input Forward Voltage	I_F =10 mA	1.8	2.1	2.4	V
V_{F_HL}	Threshold Input Voltage High to Low	V < 5 V, Cg = 1 nF	0.9			V
$\Delta V_F/\Delta T$	Temp Coefficient of Input Forward Voltage	I_F =10 mA		1	1.35	mV/°C
V_R	Input Reverse Breakdown Voltage	I_R= 10 uA	15			V
C_{IN}	Input Capacitance	F = 0.5 MHz		15		pF
OUTPUT						
I_{OH}	High Level Peak Output Current	I_F = 10 mA, V_{CC} =15V, C_{LOAD}=0.18uF, R_{G_total}=6Ω (1), C_{VDD}=10uF, Pulse width <10us	1	1.5		A
I_{OL}	Low Level Peak Output Current	V_F= 0 V, V_{CC} =15V, C_{LOAD}=0.18uF, R_{G_total}=6Ω(1), C_{VDD}=10uF, Pulse width <10us	1	2.0		A
V_{OH}	High Level Output Voltage	I_F = 10 mA, I_O= -20mA (with respect to VCC)	0.07	0.18	0.36	V
		I_F = 10 mA, I_O= 0 mA		VCC		V
V_{OL}	Low Level Output Voltage	V_F = 0 V, I_O= 20 mA			25	mV
I_{CC_H}	Output Supply Current (Diode On)	I_F = 10 mA, I_O= 0 mA			2.2	mA
I_{CC_L}	Output Supply Current (Diode Off)	V_F = 0 V, I_O= 0 mA			2	mA
UNDER VOLTAGE LOCKOUT, UCC23511 (12-V UVLO Version)						
$UVLO_R$	Under Voltage Lockout VCC rising	V_{CC_Rising}, I_F=10 mA	11	12.5	13.5	V
$UVLO_F$	Under Voltage Lockout VCC falling	$V_{CC_Falling}$, I_F=10 mA	10	11.5	12.5	V
$UVLO_{HYS}$	UVLO Hysteresis			1.0		V
UNDER VOLTAGE LOCKOUT, UCC23511B (8-V UVLO Version)						
$UVLO_R$	Under Voltage Lockout VCC rising	V_{CC_Rising}, I_F=10 mA	7.8	8.5	9.2	V
$UVLO_F$	Under Voltage Lockout VCC falling	$V_{CC_Falling}$, I_F=10 mA	7.05	7.75	8.45	V
$UVLO_{HYS}$	UVLO Hysteresis			0.75		V

(1) R_{G_total} is the total gate resistance. It includes the external gate resistor on the PCB + the internal gate resistance of the power switch. Min R_{G_total} of 4Ω is recommended (for V_{CC}-V_{EE} =15V). For more details, refer to section 9 (Application and Implementation) of this datasheet.

Copyright © 2020 Texas Instruments Incorporated

6.10 Switching Characteristics

Unless otherwise noted, all typical values are at T_A = 25°C, V_{CC}-V_{EE}= 30 V, V_{EE}= GND. All min and max specifications are at recommended operating conditions (T_J = -40 to 150°C, $I_{F(ON)}$= 7 mA to 16 mA, V_{EE}= GND, V_{CC}= 15 V to 30 V, $V_{F(OFF)}$= –5V to 0.8V)

PARAMETER		TEST CONDITIONS	MIN	TYP	MAX	UNIT
t_r	Output-signal Rise Time	Cg = 1nF F_{SW} = 20 kHz, (50% Duty Cycle) VCC=15V			28	ns
t_f	Output-signal Fall Time				25	ns
t_{PLH}	Propagation Delay, Low to High			70	105	ns
t_{PHL}	Propagation Delay, High to Low			70	105	ns
t_{PWD}	Pulse Width Distortion $\lvert t_{PHL} – t_{PLH}\rvert$				35	ns
$t_{sk(pp)}$	Part-to-Part Skew in Propagation Delay Between any Two Parts(1)	Cg = 1nF F_{SW} = 20 kHz, (50% Duty Cycle) VCC=15V, I_F=10mA			25	ns
t_{UVLO_rec}	UVLO Recovery Delay	V_{CC} Rising from 0V to 15V		20	30	µs
$CMTI_H$	Common-mode Transient Immunity (Output High)	I_F = 10 mA, V_{CM} = 1500 V, V_{CC}= 30 V, T_A= 25°C	150			kV/µs
$CMTI_L$	Common-mode Transient Immunity (Output Low)	V_F = 0 V, V_{CM} = 1500 V, V_{CC}= 30 V, T_A= 25°C	150			kV/µs

(1) $t_{sk(pp)}$ is the magnitude of the difference in propagation delay times between the output of different devices switching in the same direction while operating at identical supply voltages, temperature, input signals and loads ensured by characterization.

6.11 Insulation Characteristics Curves

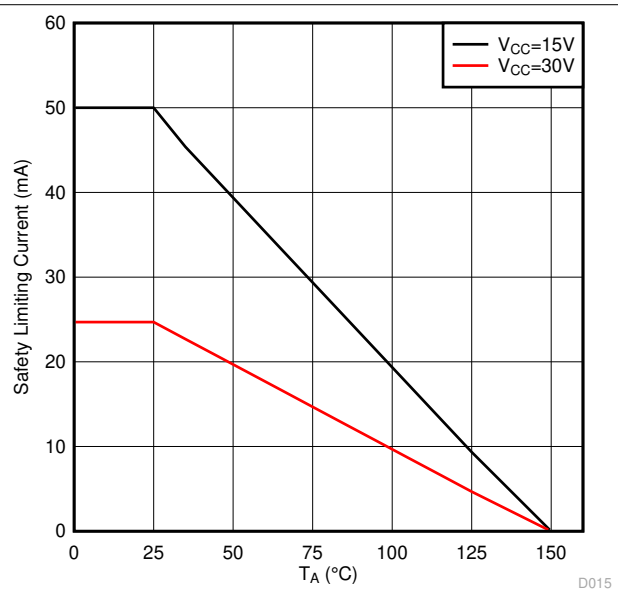

Figure 6-1. Thermal Derating Curve for Limiting Current per VDE

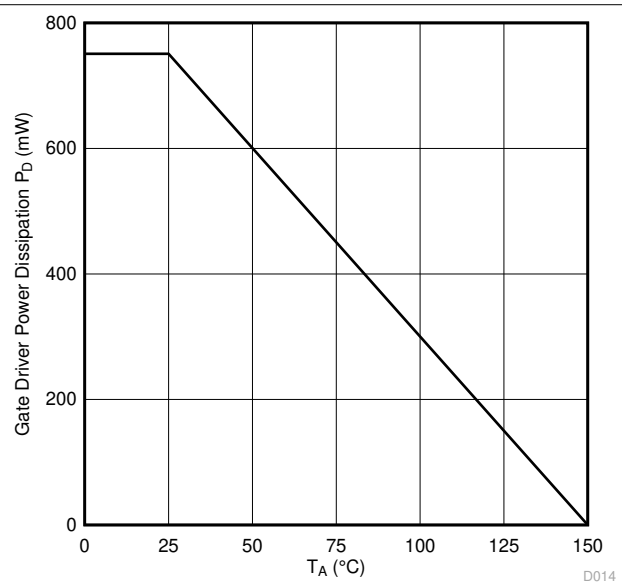

Figure 6-2. Thermal Derating Curve for Limiting Power per VDE

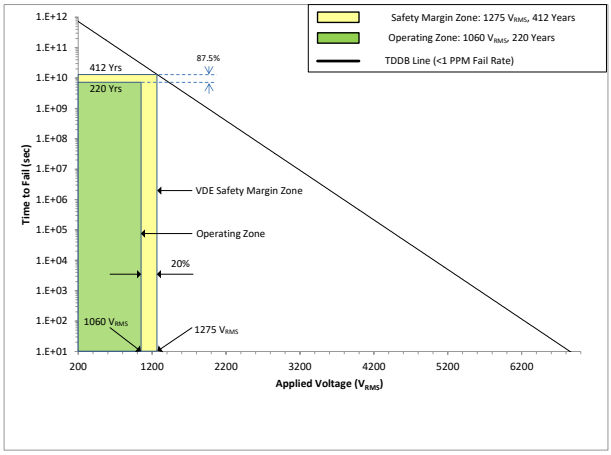

Figure 6-3. Reinforced Isolation Capacitor Life Time Projection

Copyright © 2020 Texas Instruments Incorporated

6.12 Typical Characteristics

V_{CC}= 15 V, 1-µF capacitor from V_{CC} to V_{EE}, C_{LOAD} = 1 nF for timing tests and 180nF for I_{OH} and I_{OL} tests, T_J = –40°C to +150°C, (unless otherwise noted)

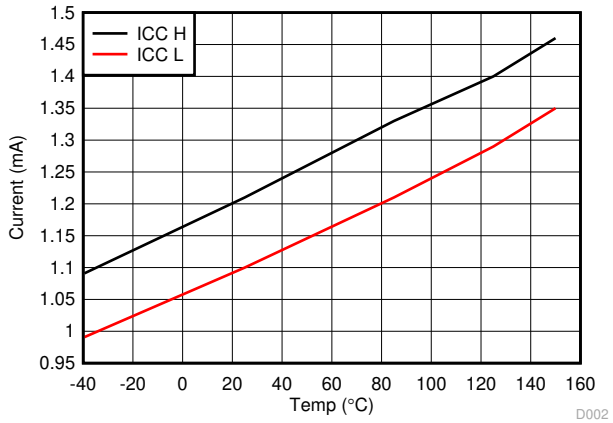

Figure 6-4. Supply currents versus Temperature

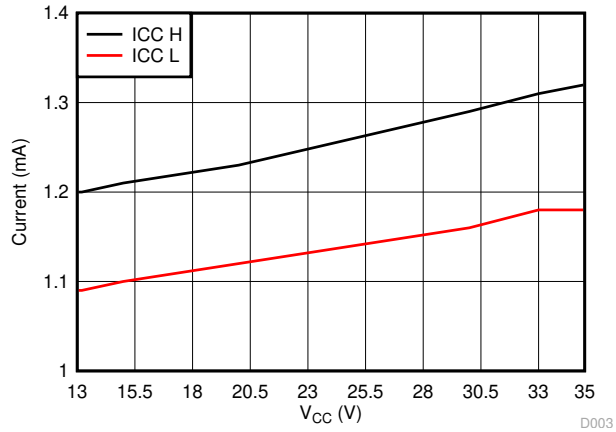

Figure 6-5. Supply current versus Supply Voltage

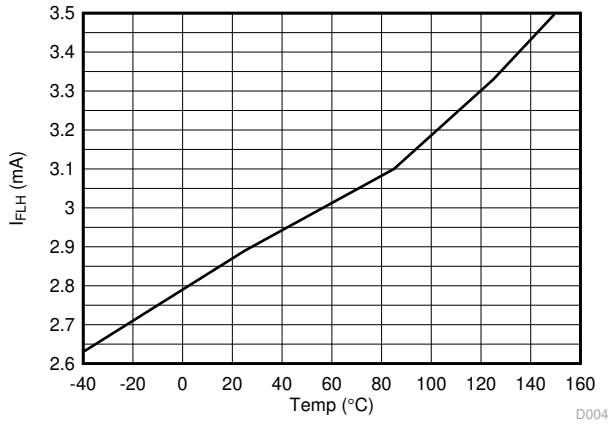

Figure 6-6. Forward threshold current versus Temperature

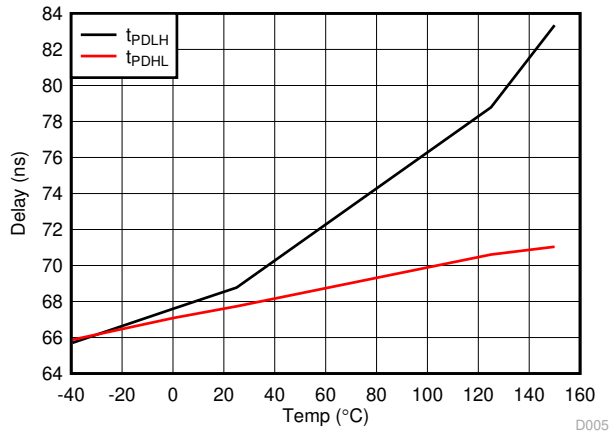

C_{LOAD} = 1-nF

Figure 6-7. Propagation delay versus Temperature

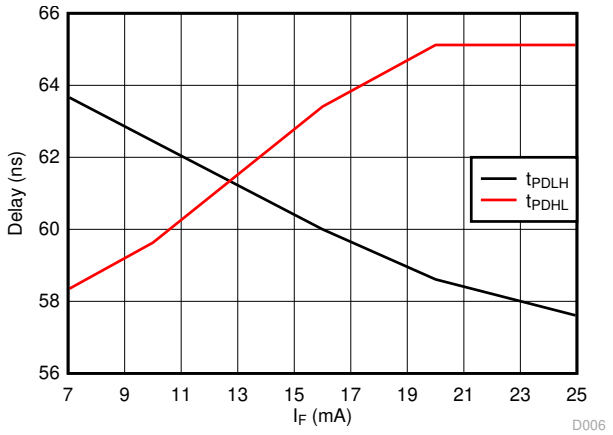

C_{LOAD} = 1-nF

Figure 6-8. Propagation delay versus Forward current

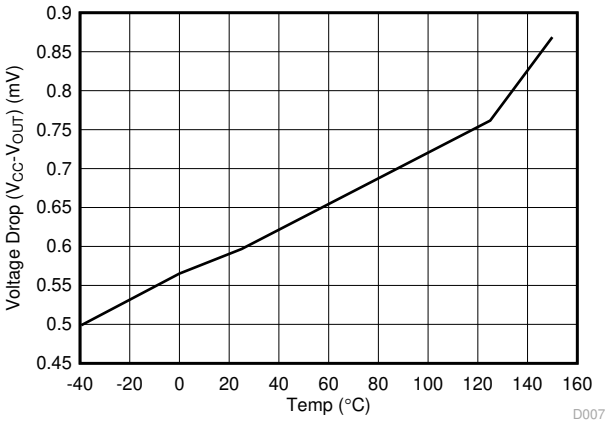

A. I_{OUT} = 0mA

Figure 6-9. V_{OH} (No Load) versus Temperature

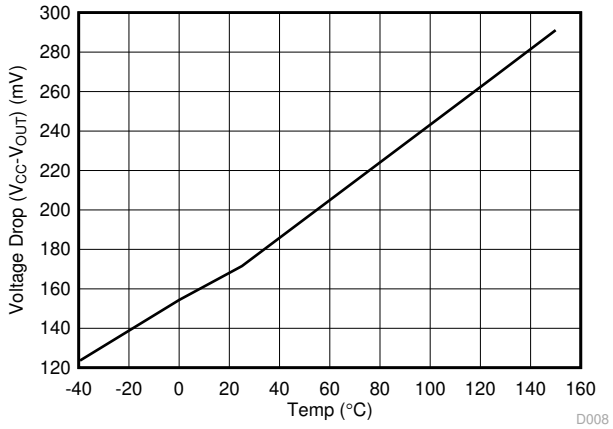

A. I_{OUT} = 20mA (sourcing)

Figure 6-10. V_{OH} (20mA Load) versus Temperature

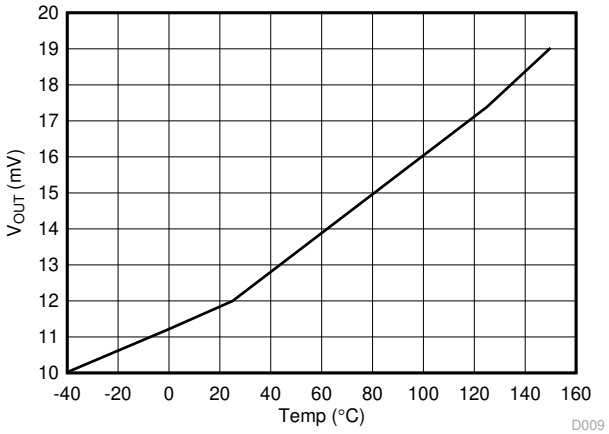

A. I_{OUT} = 20mA (sinking)

Figure 6-11. V_{OL} versus Temperature

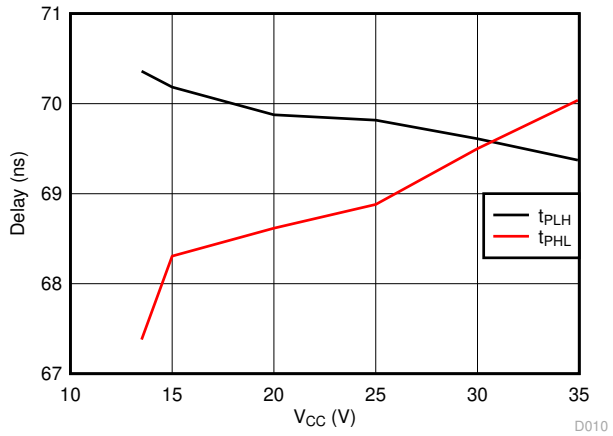

Figure 6-12. Propagation delay versus Supply voltage

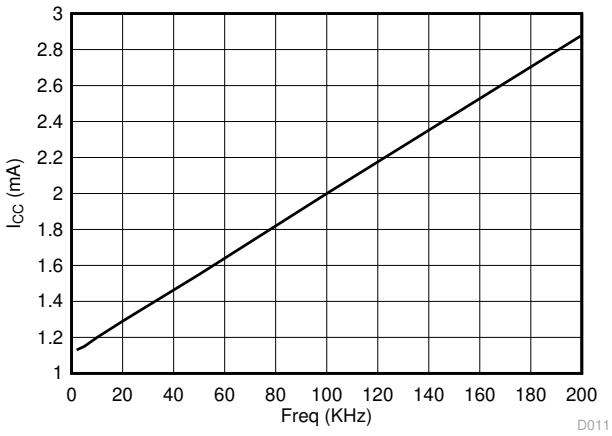

Figure 6-13. Supply current versus Frequency

Copyright © 2020 Texas Instruments Incorporated

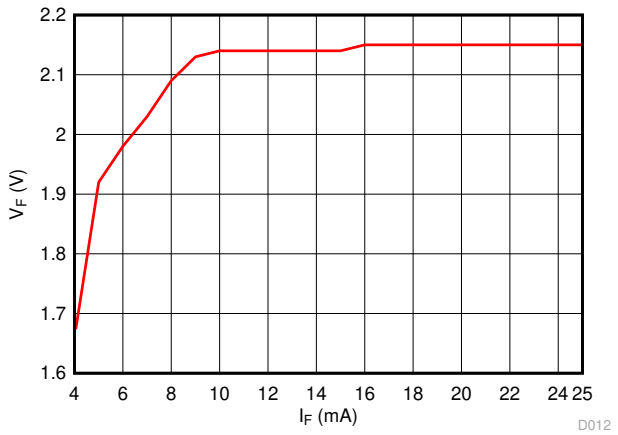

A. T_A = 25°C

Figure 6-14. Forward current versus Forward voltage drop

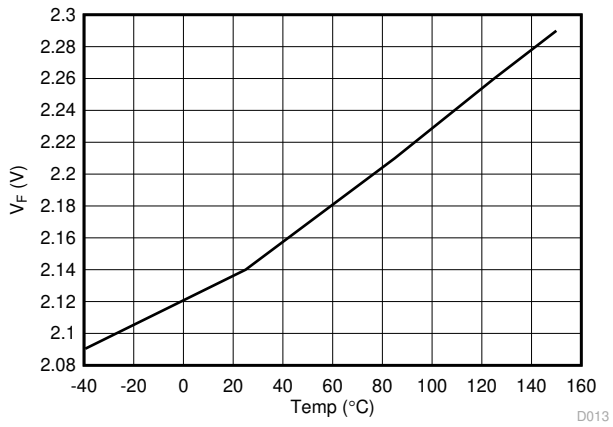

A. I_F = 10mA

Figure 6-15. Forward voltage drop versus Temperature

7 Parameter Measurement Information

7.1 Propagation Delay, rise time and fall time

Figure 7-1 shows the propagation delay from the input forward current I_F, to V_{OUT}. This figures also shows the circuit used to measure the rise (t_r) and fall (t_f) times and the propagation delays t_{PDLH} and t_{PDHL}.

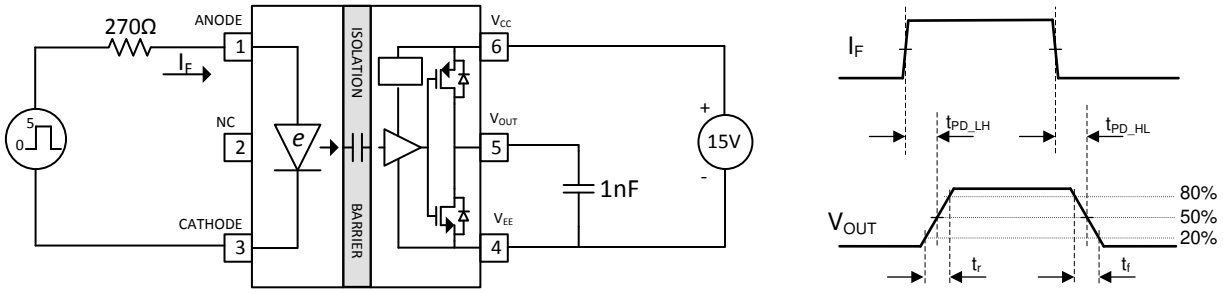

Figure 7-1. I_F to V_{OUT} Propagation Delay, Rise Time and Fall Time

7.2 I_{OH} and I_{OL} testing

Figure 7-2 shows the circuit used to measure the output drive currents I_{OH} and I_{OL}. A series resistor of 6 Ω and a load capacitance of 180 nF are used at the output. The peak dv/dt of the capacitor voltage is measured in order to determine the peak source and sink currents of the gate driver.

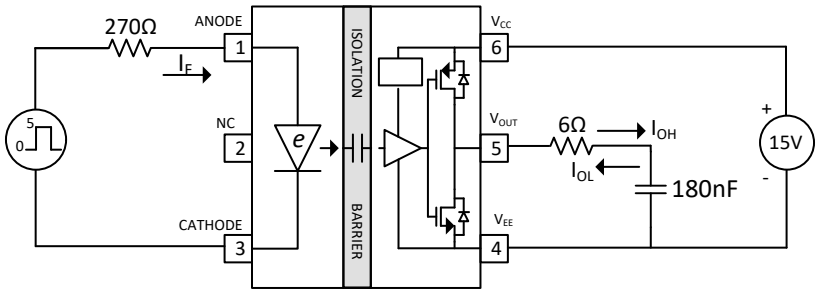

Figure 7-2. I_{OH} and I_{OL}

7.3 CMTI Testing

Figure 7-3 is the simplified diagram of the CMTI testing. Common mode voltage is set to 1500V. The test is performed with I_F = 6mA (VOUT= High) and I_F = 0mA (V_{OUT} = LOW). The diagram also shows the fail criteria for both cases. During the application on the CMTI pulse with I_F = 6mA, if V_{OUT} drops from VCC to ½VCC it is considered as a failure. With I_F= 0mA, if V_{OUT} rises above 1V, it is considered as a failure.

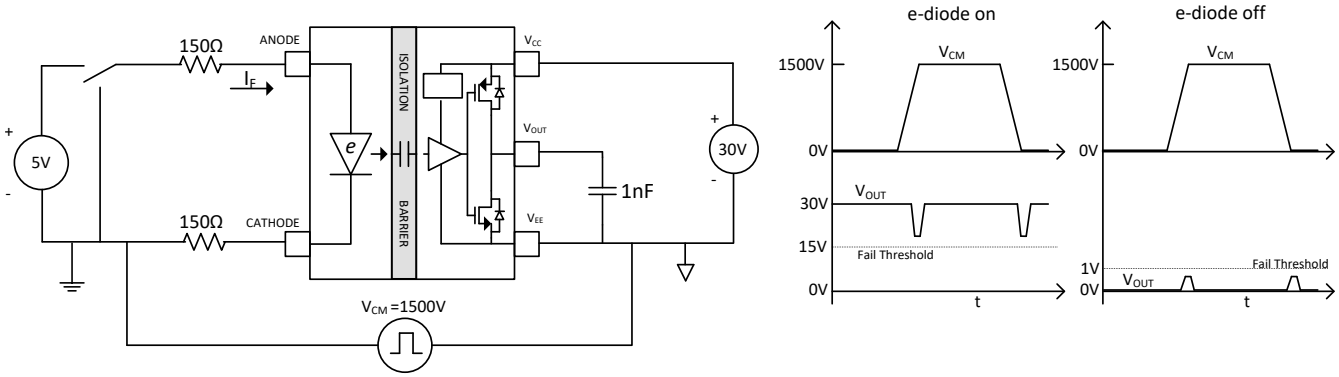

Figure 7-3. CMTI Test Circuit for UCC23511

Copyright © 2020 Texas Instruments Incorporated

8 Detailed Description

8.1 Overview

UCC23511 is a single channel isolated gate driver, with an opto-compatible input stage, that can drive IGBTs, MOSFETs and SiC FETs. It has 1.5-A source and 2-A sink peak output current capability with max output driver supply voltage of 33V. The inputs and the outputs are galvanically isolated. UCC23511 is offered in an industry standard 6 pin (SO6) package with >8.5mm creepage and clearance. It has a working voltage of 1060-V_{RMS}, reinforced isolation rating of 5.7-kV_{RMS} for 60s and a surge rating of 8-kV_{PK}. It is pin-to-pin compatible with standard opto isolated gate drivers. While standard opto isolated gate drivers use an LED as the input stage, UCC23511 uses an emulated diode (or "e-diode") as the input stage which does not use light emission to transmit signals across the isolation barrier. The input stage is isolated from the driver stage by dual, series HV SiO_2 capacitors in full differential configuration that not only provides reinforced isolation but also offers best-in-class common mode transient immunity of >150kV/us. The e-diode input stage along with capacitive isolation technology gives UCC23511 several performance advantages over standard opto isolated gate drivers. They are as follows:

1.

1. Since the e-diode does not use light emission for its operation, the reliability and aging characteristics of UCC23511 are naturally superior to those of standard opto isolated gate drivers.
2. Higher ambient operating temperature range of 125°C, compared to only 105°C for most opto isolated gate drivers
3. The e-diode forward voltage drop has less part-to-part variation and smaller variation across temperature. Hence, the operating point of the input stage is more stable and predictable across different parts and operating temperature.
4. Higher common mode transient immunity than opto isolated gate drivers
5. Smaller propagation delay than opto isolated gate drivers
6. Due to superior process controls achievable in capacitive isolation compared to opto isolation, there is less part-to-part skew in the prop delay, making the system design simpler and more robust
7. Smaller pulse width distortion than opto isolated gate drivers

The signal across the isolation has an on-off keying (OOK) modulation scheme to transmit the digital data across a silicon dioxide based isolation barrier (see Figure 8-1). The transmitter sends a high-frequency carrier across the barrier to represent one digital state and sends no signal to represent the other digital state. The receiver demodulates the signal after advanced signal conditioning and produces the output through a buffer stage. The UCC23511 also incorporates advanced circuit techniques to maximize the CMTI performance and minimize the radiated emissions from the high frequency carrier and IO buffer switching. Figure 8-2 shows conceptual detail of how the OOK scheme works.

Copyright © 2020 Texas Instruments Incorporated

8.2 Functional Block Diagram

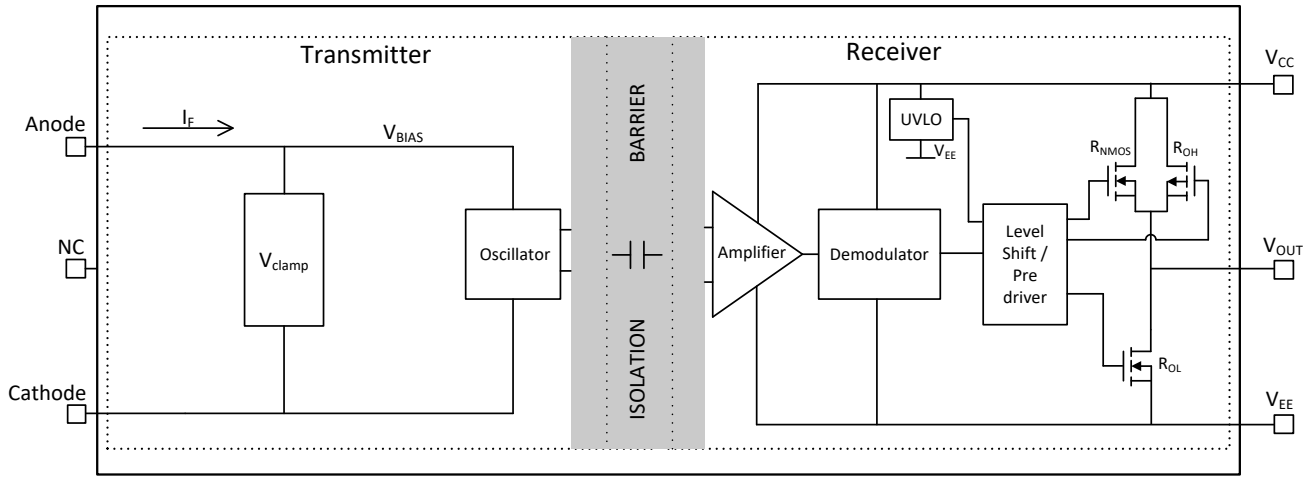

Figure 8-1. Conceptual Block Diagram of a Isolated Gate Driver with an Opto Emulated Input Stage (SO6 pkg)

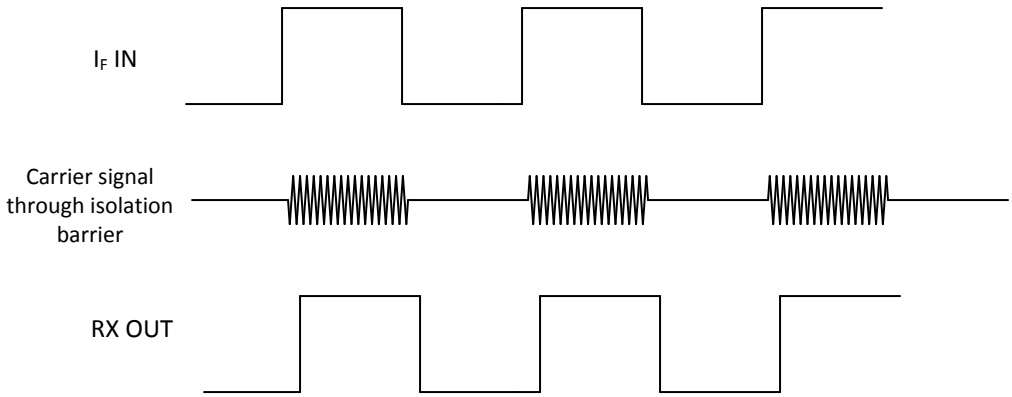

Figure 8-2. On-Off Keying (OOK) Based Modulation Scheme

8.3 Feature Description

8.3.1 Power Supply

Since the input stage is an emulated diode, no power supply is needed at the input.

The output supply, V_{CC}, supports a voltage range from 14V to 33V. For operation with bipolar supplies, the power device is turned off with a negative voltage on the gate with respect to the emitter or source. This configuration prevents the power device from unintentionally turning on because of current induced from the Miller effect. The typical values of the V_{CC} and V_{EE} output supplies for bipolar operation are 15V and -8V with respect to GND for IGBTs, and 20V and -5V for SiC MOSFETs.

For operation with unipolar supply, the V_{CC} supply is connected to 15V with respect to GND for IGBTs, and 20V for SiC MOSFETs. The V_{EE} supply is connected to 0V.

8.3.2 Input Stage

The input stage of UCC23511 is simply the e-diode and therefore has an Anode (Pin 1) and a Cathode (Pin 3). Pin 2 has no internal connection and can be left open or connected to ground. The input stage does not have a power and ground pin. When the e-diode is forward biased by applying a positive voltage to the Anode with respect to the Cathode, a forward current I_F flows into the e-diode. The forward voltage drop across the e-diode is 2.1V (typ). An external resistor should be used to limit the forward current. The recommended range for the forward current is 7mA to 16mA. When I_F exceeds the threshold current I_{FLH}(2.8mA typ.) a high frequency signal

Copyright © 2020 Texas Instruments Incorporated

is transmitted across the isolation barrier through the high voltage SiO_2 capacitors. The HF signal is detected by the receiver and V_{OUT} is driven high. See Section 9.2.2.1 for information on selecting the input resistor. The dynamic impedance of the e-diode is very small(<1.0Ω) and the temperature coefficient of the e-diode forward voltage drop is <1.35mV/°C. This leads to excellent stability of the forward current I_F across all operating conditions. If the Anode voltage drops below V_{F_HL} (0.9V), or reverse biased, the gate driver output is driven low. The reverse breakdown voltage of the e-diode is >15V. So for normal operation, a reverse bias of up to 13V is allowed. The large reverse breakdown voltage of the e-diode enables UCC23511 to be operated in interlock architecture (see example in Figure 8-3) where V_{SUP} can be as high as 12V. The system designer has the flexibility to choose a 3.3V, 5.0V or up to 12V PWM signal source to drive the input stage of UCC23511 using an appropriate input resistor. The example shows two gate drivers driving a set of IGBTs. The inputs of the gate drivers are connected as shown and driven by two buffers that are controlled by the MCU. Interlock architecture prevents both the e-diodes from being "ON" at the same time, preventing shoot through in the IGBTs. It also ensures that if both PWM signals are erroneously stuck high (or low) simultaneously, both gate driver outputs will be driven low.

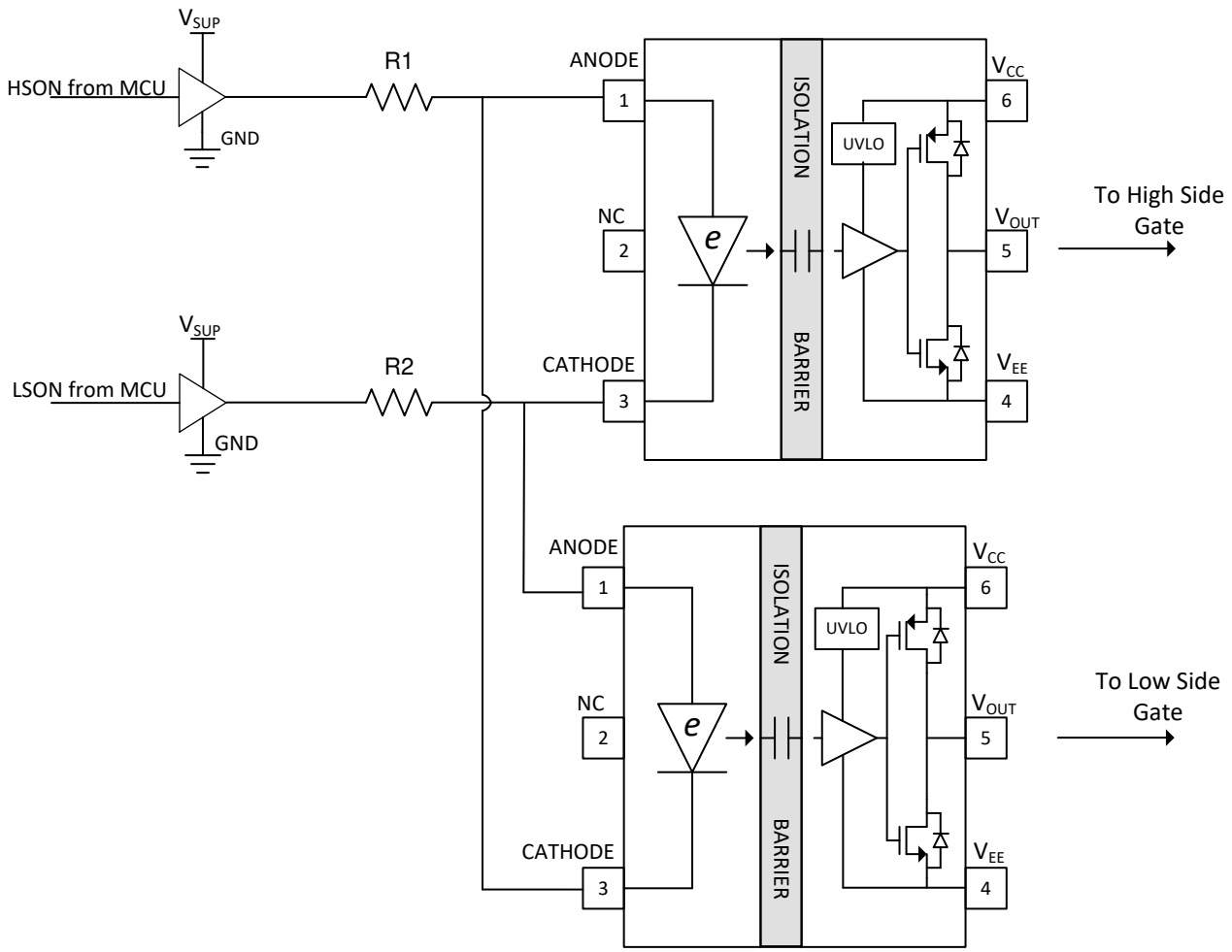

Figure 8-3. Interlock

8.3.3 Output Stage

The output stages of the UCC23511 family feature a pullup structure that delivers the highest peak-source current when it is most needed which is during the Miller plateau region of the power-switch turnon transition (when the power-switch drain or collector voltage experiences dV/dt). The output stage pullup structure features a P-channel MOSFET and an additional pull-up N-channel MOSFET in parallel. The function of the N-channel MOSFET is to provide a brief boost in the peak-sourcing current, enabling fast turnon. Fast turnon is

accomplished by briefly turning on the N-channel MOSFET during a narrow instant when the output is changing states from low to high. The on-resistance of this N-channel MOSFET (R_{NMOS}) is approximately 5.1 Ω when activated.

Table 8-1. UCC23511 On-Resistance

R_{NMOS}	R_{OH}	R_{OL}	UNIT
5.1	9.5	0.40	Ω

The R_{OH} parameter is a DC measurement and is representative of the on-resistance of the P-channel device only. This parameter is only for the P-channel device because the pullup N-channel device is held in the OFF state in DC condition and is turned on only for a brief instant when the output is changing states from low to high. Therefore, the effective resistance of the UCC23511 pullup stage during this brief turnon phase is much lower than what is represented by the R_{OH} parameter, yielding a faster turn on. The turnon-phase output resistance is the parallel combination R_{OH} || R_{NMOS}.

The pulldown structure in the UCC23511 is simply composed of an N-channel MOSFET. The output voltage swing between V_{CC} and V_{EE} provides rail-to-rail operation because of the MOS-out stage which delivers very low dropout.

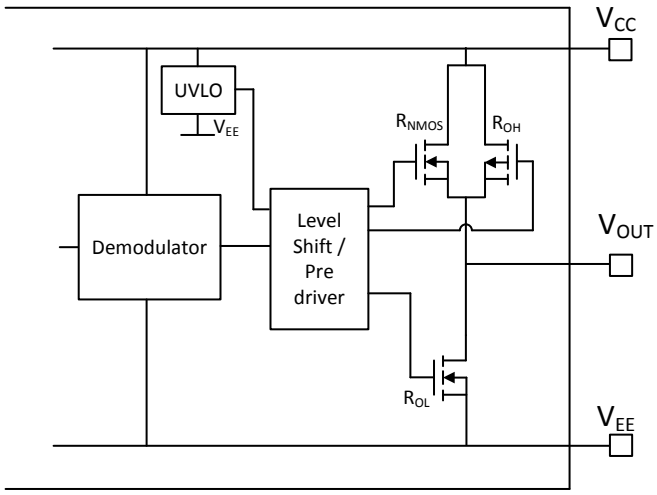

Figure 8-4. Output Stage

8.3.4 Protection Features

8.3.4.1 Undervoltage Lockout (UVLO)

UVLO function is implemented for V_{CC} and V_{EE} pins to prevent an under-driven condition on IGBTs and MOSFETs. When V_{CC} is lower than $UVLO_R$ at device start-up or lower than $UVLO_F$ after start-up, the voltage-supply UVLO feature holds the effected output low, regardless of the input forward current as shown in Table 8-2. The V_{CC} UVLO protection has a hysteresis feature ($UVLO_{hys}$). This hysteresis prevents chatter when the power supply produces ground noise which allows the device to permit small drops in bias voltage, which occurs when the device starts switching and operating current consumption increases suddenly.

When V_{CC} drops below $UVLO_F$, a delay, t_{UVLO_rec} occurs on the output when the supply voltage rises above $UVLO_R$ again.

Copyright © 2020 Texas Instruments Incorporated

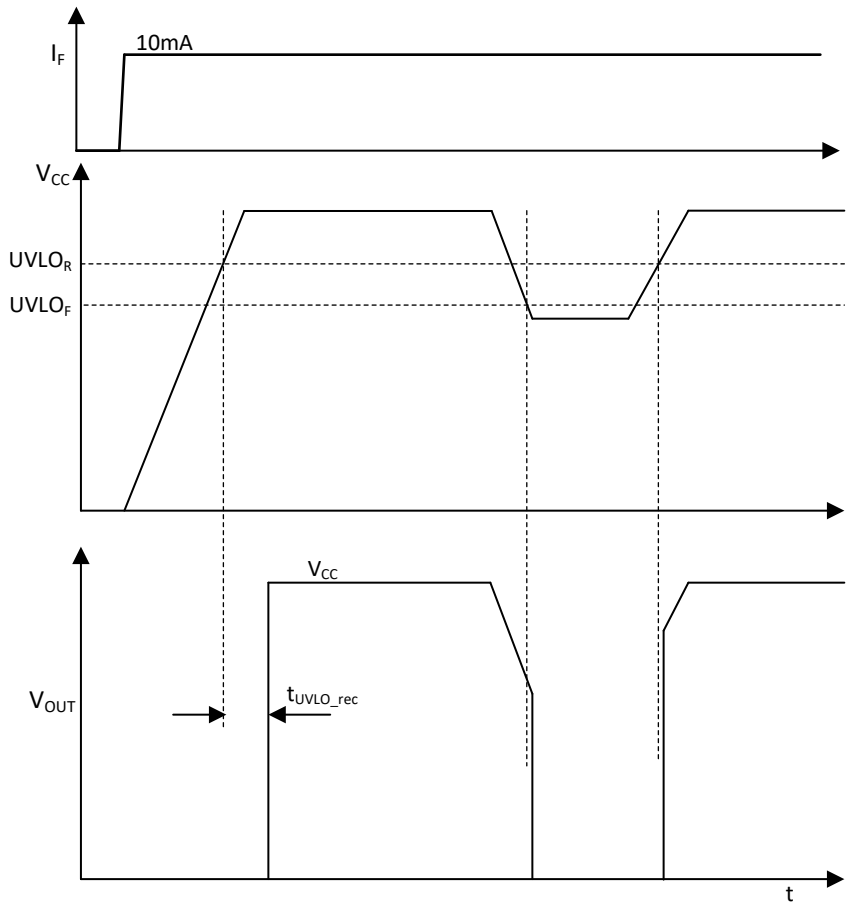

Figure 8-5. UVLO functionality

8.3.4.2 Active Pulldown

The active pull-down function is used to pull the IGBT or MOSFET gate to the low state when no power is connected to the V_{CC} supply. This feature prevents false IGBT and MOSFET turn-on by clamping V_{OUT} pin to approximately 2V.

When the output stage of the driver is in an unbiased condition (V_{CC} floating), the driver outputs (see Figure 8-4) are held low by an active clamp circuit that limits the voltage rise on the driver outputs. In this condition, the upper PMOS & NMOS are held off while the lower NMOS gate is tied to the driver output through an internal 500-kΩ resistor. In this configuration, the lower NMOS device effectively clamps the output (V_{OUT}) to less than 2V.

8.3.4.3 Short-Circuit Clamping

The short-circuit clamping function is used to clamp voltages at the driver output and pull the output pin V_{OUT} slightly higher than the V_{CC} voltage during short-circuit conditions. The short-circuit clamping function helps protect the IGBT or MOSFET gate from overvoltage breakdown or degradation. The short-circuit clamping function is implemented by adding a diode connection between the dedicated pins and the V_{CC} pin inside the driver. The internal diodes can conduct up to 500-mA current for a duration of 10 µs and a continuous current of 20 mA. Use external Schottky diodes to improve current conduction capability as needed.

8.4 Device Functional Modes

Table 8-2 lists the functional modes for UCC23511

Table 8-2. Function Table for UCC23511 with VCC Rising

e-diode	VCC	V_{OUT}
OFF (I_F< I_{FLH})	0V - 33V	Low
ON (I_F> I_{FLH})	0V - $UVLO_R$	Low
ON ((I_F> I_{FLH})	$UVLO_R$ - 33V	High

Table 8-3. Function Table for UCC23511 with VCC Falling

e-diode	VCC	V_{OUT}
OFF (I_F< I_{FLH})	0V - 33V	Low
ON (I_F> I_{FLH})	$UVLO_F$- 0V	Low
ON ((I_F> I_{FLH})	33V - $UVLO_F$	High

8.4.1 ESD Structure

Figure 8-6 shows the multiple diodes involved in the ESD protection components of the UCC23511 device . This provides pictorial representation of the absolute maximum rating for the device.

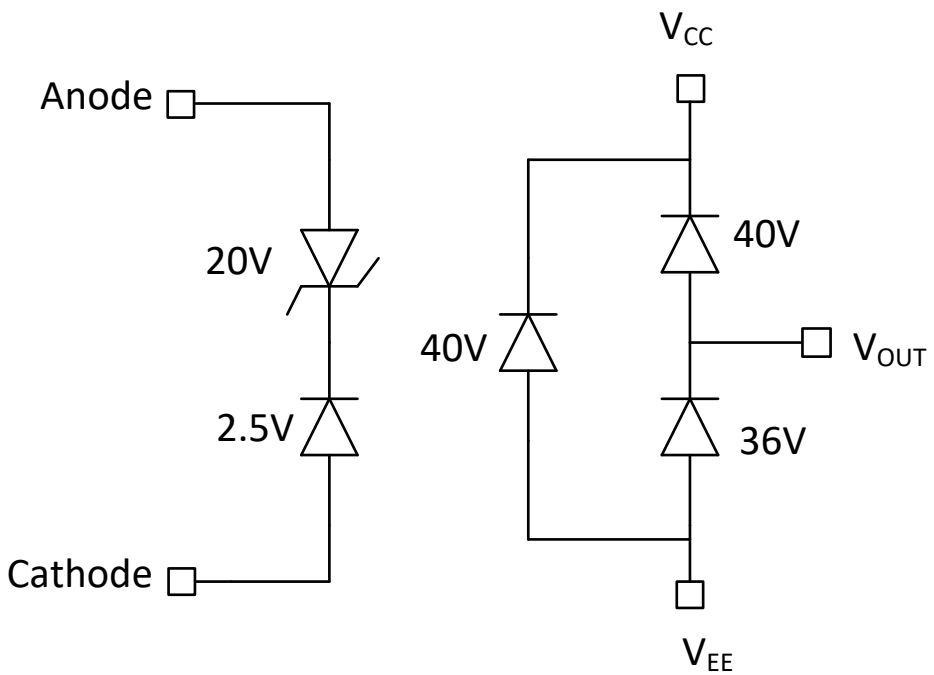

Figure 8-6. ESD Structure

Copyright © 2020 Texas Instruments Incorporated

9 Application and Implementation

Note

Information in the following applications sections is not part of the TI component specification, and TI does not warrant its accuracy or completeness. TI's customers are responsible for determining suitability of components for their purposes. Customers should validate and test their design implementation to confirm system functionality.

9.1 Application Information

UCC23511 is a single channel, isolated gate driver with opto-compatible input for power semiconductor devices, such as MOSFETs, IGBTs, or SiC MOSFETs. It is intended for use in applications such as motor control, industrial inverters, and switched-mode power supplies. It differs from standard opto isolated gate drivers as it does not have an LED input stage. Instead of an LED, it has an emulated diode (e-diode). To turn the e-diode "ON", a forward current in the range of 7mA to 16mA should be driven into the Anode. This will drive the gate driver output High and turn on the power FET. Typically, MCU's are not capable of providing the required forward current. Hence a buffer has to be used between the MCU and the input stage of UCC23511. Typical buffer power supplies are either 5V or 3.3V. A resistor is needed between the buffer and the input stage of UCC23511 to limit the current. It is simple, but important to choose the right value of resistance. The resistor tolerance, buffer supply voltage tolerance and output impedance of the buffer, have to be considered in the resistor selection. This will ensure that the e-diode forward current stays within the recommended range of 7mA to 16mA. Detailed design recommendations are given in the Section 9.1. The current driven input stage offers excellent noise immunity that is need in high power motor drive systems, especially in cases where the MCU cannot be located close to the isolated gate driver. UCC23511 offers best in class CMTI performance of >150kV/us at 1500V common mode voltages.

The e-diode is capable of 25mA continuous in the forward direction. The forward voltage drop of the e-diode has a very tight part to part variation (1.8V min to 2.4V max). The temperature coefficient of the forward drop is <1.35mV/°C. The dynamic impedance of the e-diode in the forward biased region is ~1Ω. All of these factors contribute in excellent stability of the e-diode forward current. To turn the e-diode "OFF", the Anode - Cathode voltage should be <0.8V, or I_F should be <I_{FLH}. The e-diode can also be reverse biased up to 13V (14V abs max) in order to turn it off and bring the gate driver output low. The large reverse breakdown voltage of the input stage provides system designers the flexibility to drive the input stage with 12V PWM signals without the need for an additional clamping circuit on the Anode and Cathode pin.

The output power supply for UCC23511 can be as high as 33V (35V abs max). The output power supply can be configured externally as a single isolated supply up to 33V or isolated bipolar supply such that V_{CC}-V_{EE} does not exceed 33V, or it can be bootstrapped (with external diode & capacitor) if the system uses a single power supply with respect to the power ground. Typical quiescent power supply current from V_{CC} is 1.2mA (max 2.2mA).

Copyright © 2020 Texas Instruments Incorporated

9.2 Typical Application

The circuit in Figure 9-1, shows a typical application for driving IGBTs.

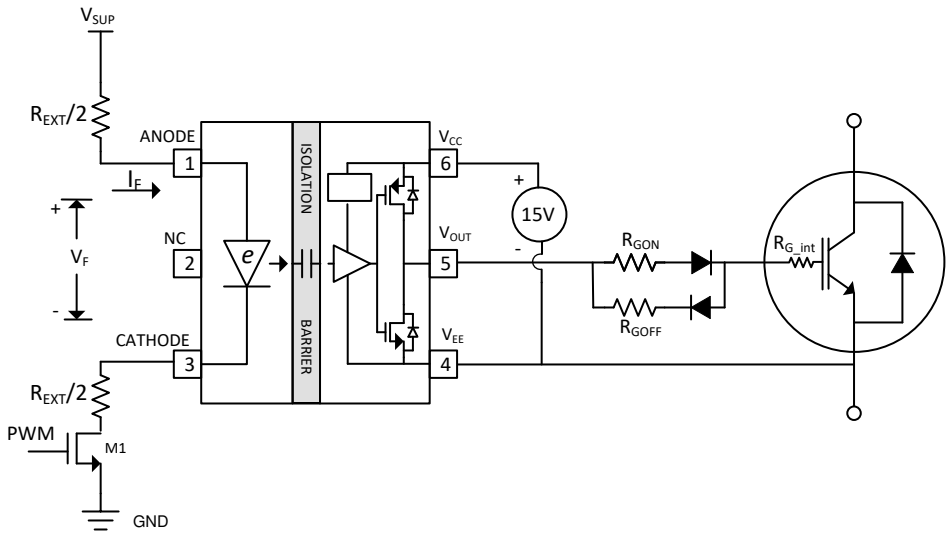

Figure 9-1. Typical Application Circuit for UCC23511 to Drive IGBT

9.2.1 Design Requirements

Table 9-1 lists the recommended conditions to observe the input and output of the UCC23511 gate driver.

Table 9-1. UCC23511 Design Requirements

PARAMETER	VALUE	UNIT
V_{CC}	15	V
I_F	10	mA
Switching frequency	8	kHz

Copyright © 2020 Texas Instruments Incorporated

9.2.2 Detailed Design Procedure

9.2.2.1 Selecting the Input Resistor

The input resistor limits the current that flows into the e-diode when it is forward biased. The threshold current I_{FLH} is 2.8 mA typ. The recommended operating range for the forward current is 7 mA to 16 mA (e-diode ON). All the electrical specifications are guaranteed in this range. The resistor should be selected such that for typical operating conditions, I_F is 10 mA. Following are the list of factors that will affect the exact value of this current:

1. Supply Voltage V_{SUP} variation
2. Manufacturer's tolerance for the resistor and variation due to temperature
3. e-diode forward voltage drop variation (at I_F=10 mA, V_F= typ 2.1 V, min 1.8 V, max 2.4 V, with a temperature coefficient <1.35 mV/°C and dynamic impedance < 1 Ω)

See Figure 9-2 for the schematic using a single NMOS and split resistor combination to drive the input stage of UCC23511. The input resistor can be selected using the equation shown.

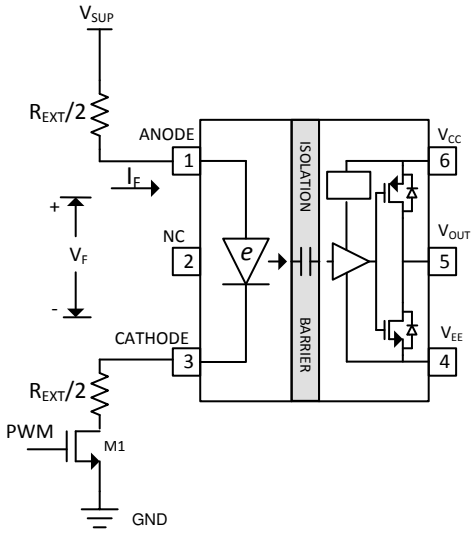

$$R_{EXT} = \frac{V_{SUP} - V_F}{I_F} - R_{M1}$$

Figure 9-2. Configuration 1: Driving the input stage of UCC23511 with a single NMOS and split resistors

Driving the input stage of UCC23511 using a single buffer is shown in Figure 9-3 and using 2 buffers is shown in Figure 9-4

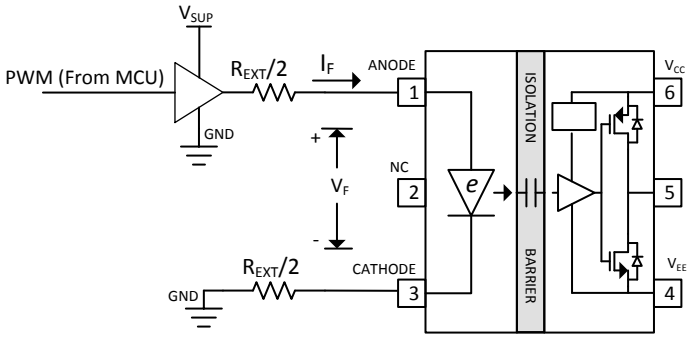

$$R_{EXT} = \frac{V_{SUP} - V_F}{I_F} - R_{OH_buf}$$

Figure 9-3. Configuration 2: Driving the input stage of UCC23511 with one Buffer and split resistors

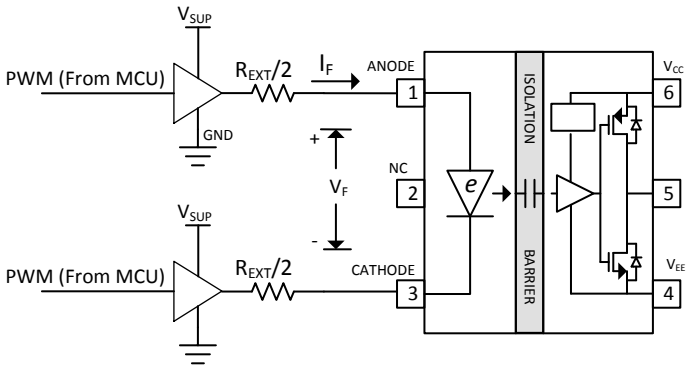

$$R_{EXT} = \frac{V_{SUP} - V_F}{I_F} - (R_{OH_buf} + R_{OL_buf})$$

Figure 9-4. Configuration 3: Driving the input stage of UCC23511 with 2 buffers and split resistors

Table 9-2 shows the range of values for R_{EXT} for the 3 different configurations shown in Figure 9-2, Figure 9-3 and Figure 9-4.The assumptions used in deriving the range for R_{EXT} are as follows:

1. Target forward current I_F is 7mA min, 10mA typ and 16mA max
2. e-diode forward voltage drop is 1.8V to 2.4V
3. V_{SUP} (Buffer supply voltage) is 5V with ±5% tolerance
4. Manufacturer's tolerance for R_{EXT} is 1%
5. NMOS resistance is 0.25Ω to 1.0Ω (for configuration 1)
6. R_{OH}(buffer output impedance in output "High" state) is 13Ω min, 18Ω typ and 22Ω max
7. R_{OL}(buffer output impedance in "Low" state) is 10Ω min, 14Ω typ and 17Ω max

Table 9-2. R_{EXT} Values to Drive The Input Stage

	R_{EXT} Ω		
Configuration	Min	Typ	Max
Single NMOS and R_{EXT}	218	290	331
Single Buffer and R_{EXT}	204	272	311
Two Buffers and R_{EXT}	194	259	294

9.2.2.2 Gate Driver Output Resistor

The external gate-driver resistors, $R_{G(ON)}$ and $R_{G(OFF)}$ are used to:

1. Limit ringing caused by parasitic inductances and capacitances
2. Limit ringing caused by high voltage or high current switching dv/dt, di/dt, and body-diode reverse recovery
3. Fine-tune gate drive strength, specifically peak sink and source current to optimize the switching loss
4. Reduce electromagnetic interference (EMI)

The output stage of UCC23511 has a pull up structure consisting of a P-channel MOSFET and an N-channel MOSFET in parallel, as shown in Figure 8-4. The N-channel MOSFET provides the peak current that charges the gate of the IGBT (or power switch) while the P-channel MOSFET ensures that V_{OUT} will go all the way upto V_{CC}. Figure 9-1 shows the internal gate resistance, R_{G_int} of the power switch. $R_{G_int}$is usually specified in the datasheet of the power switch. When turning the power switch "on", the gate driver sees a total gate resistance $R_{G_total} = R_{GON} + R_{G_int}$ and when turning the power switch "off", the gate driver sees a total gate resistance $R_{G_total} = R_{GOFF} + R_{G_int}$ in series with the gate capacitance where,

- R_{GON} is the external resistance on the pcb for turn "on"
- R_{GOFF} is the external resistance on the pcb for turn "off"

Copyright © 2020 Texas Instruments Incorporated

- R_{G_int} is the internal gate resistance of the power switch that can be found in the data sheet of the power switch
- Ideal diodes — zero resistance and zero voltage drop — are assumed on both the turn-on and turn-off paths, for simplicity.

To illustrate the procedure to select R_{GON} and R_{GOFF} , let us consider the following example with the assumptions listed below:

1. Power switch internal gate resistance is 2 ohms
2. Desired charging current is 1.5A
3. Desired discharging current is 1.7A
4. Gate driver supply is 15 V

For this example, since V_{CC}=15V, use the typical curves shown in Figure 9-5. It can be seen that we need a total turn on resistance of 7 ohms (peak charging current of 1.5A) and a total turn off resistance of 8 ohms (peak discharging current of 1.7A). Subtracting the internal gate resistance of the power switch, we get R_{GON}= 7 ohms - 2 ohms = 5 ohms, and R_{GOFF}= 8 ohms- 2 ohms = 6 ohms.

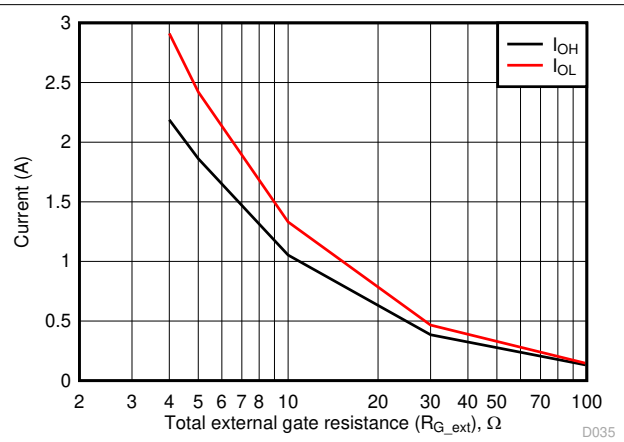

Figure 9-5. Peak drive current vs Total gate resistance, R_{G_total} (Gate driver supply =15V)

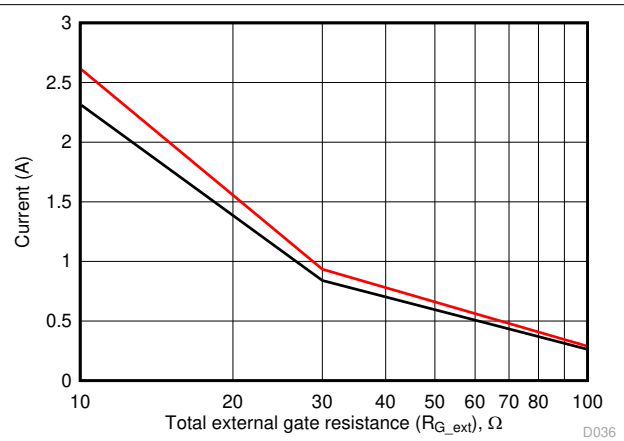

Figure 9-6. Peak drive current vs Total gate resistance, R_{G_total} (Gate driver supply = 30V)

Use Table 9-3 to find the minimum gate resistance to be used with UCC23511 when driving a power switch. The values shown includes the power switch internal gate resistance R_{G_int}. Hence, R_{G_int} must be subtracted from the values shown to determine the value of the resistor to populate on the printed circuit board.

Table 9-3. Minimum gate resistor (Ω)

Gate driver supply V_{CC}-V_{EE} (V)	Minimum total gate resistance (Ω) = (R_{GON}+ R_{G_int}) or (R_{GOFF}+ R_{G_int})
15	4
23	7
30	10

The diodes shown in series with each, R_{GON} and R_{GOFF}, in Figure 9-1 ensure the gate drive current flows through the intended path, respectively, during turn-on and turn-off. Note that the diode forward drop will reduce the voltage level at the gate of the power switch. To achieve rail-to-rail gate voltage levels, add a resistor from the V_{OUT} pin to the power switch gate, with a resistance value approximately 20 times higher than R_{GON} and R_{GOFF}. For the examples described in this section, a good choice is 100 Ω to 200 Ω.

Note

The estimated peak current is also influenced by PCB layout and load capacitance. Parasitic inductance in the gate-driver loop can slow down the peak gate-drive current and introduce overshoot and undershoot. Therefore, TI strongly recommends that the gate-driver loop should be minimized. Conversely, the peak source and sink current is dominated by loop parasitics when the load capacitance (C_{ISS}) of the power transistor is very small (typically less than 1 nF) because the rising and falling time is too small and close to the parasitic ringing period.

9.2.2.3 Estimate Gate-Driver Power Loss

The total loss, P_G, in the gate-driver subsystem includes the power losses (P_{GD}) of the UCC23511 device and the power losses in the peripheral circuitry, such as the external gate-drive resistor.

The P_{GD} value is the key power loss which determines the thermal safety-related limits of the UCC23511 device, and it can be estimated by calculating losses from several components.

The first component is the static power loss, P_{GDQ}, which includes power dissipated in the input stage (P_{GDQ_IN}) as well as the quiescent power dissipated in the output stage (P_{GDQ_OUT}) when operating with a certain switching frequency under no load. P_{GDQ_IN} is determined by I_F and V_F and is given by Equation 1. The P_{GDQ_OUT} parameter is measured on the bench with no load connected to V_{OUT} pin at a given V_{CC}, switching frequency, and ambient temperature. In this example, V_{CC} is 15 V. The current on the power supply, with PWM switching at 10 kHz, is measured to be I_{CC} = 1.33 mA . Therefore, use Equation 2 to calculate P_{GDQ_OUT}.

$$P_{GDQ_IN} = \frac{1}{2} * V_F * I_F \tag{1}$$

$$P_{GDQ_OUT} = V_{CC} * I_{CC} \tag{2}$$

The total quiescent power (without any load capacitance) dissipated in the gate driver is given by the sum of Equation 1 and Equation 2 as shown in Equation 3

$$P_{GDQ} = P_{GDQ_IN} + P_{GDQ_OUT} = 10\text{ mW} + 20\text{mW} = 30\text{mW} \tag{3}$$

The second component is the switching operation loss, P_{GDSW}, with a given load capacitance which the driver charges and discharges the load during each switching cycle. Use Equation 4 to calculate the total dynamic loss from load switching, P_{GSW}.

$$P_{GSW} = V_{CC2} \times Q_G \times f_{SW} \tag{4}$$

where

- Q_G is the gate charge of the power transistor at V_{CC}.

So, for this example application the total dynamic loss from load switching is approximately 18 mW as calculated in Equation 5.

$$P_{GSW} = 15\text{ V} \times 120\text{ nC} \times 10\text{ kHz} = 18\text{ mW} \tag{5}$$

Q_G represents the total gate charge of the power transistor switching 520 V at 50 A, and is subject to change with different testing conditions. The UCC23511 gate-driver loss on the output stage, P_{GDO}, is part of P_{GSW}. P_{GDO} is equal to P_{GSW} if the external gate-driver resistance and power-transistor internal resistance are 0 Ω, and all the gate driver-loss will be dissipated inside the UCC23511. If an external turn-on and turn-off resistance exists, the total loss is distributed between the gate driver pull-up/down resistance, external gate resistance, and

Copyright © 2020 Texas Instruments Incorporated

power-transistor internal resistance. Importantly, the pull-up/down resistance is a linear and fixed resistance if the source/sink current is not saturated to 1.5A/2.0A, however, it will be non-linear if the source/sink current is saturated. Therefore, P_{GDO} is different in these two scenarios.

Case 1 - Linear Pull-Up/Down Resistor:

$$P_{GDO} = \frac{P_{GSW}}{2}\left[\frac{R_{OH}||R_{NMOS}}{R_{OH}||R_{NMOS} + R_{GON} + R_{GFET_int}} + \frac{R_{OL}}{R_{OL} + R_{GOFF} + R_{GFET_int}}\right] \tag{6}$$

In this design example, all the predicted source and sink currents are less than 1.5 A and 2.0 A, therefore, use Equation 6 to estimate the UCC23511 gate-driver loss.

$$P_{GDO} = \frac{18\text{ mW}}{2}\left[\frac{9.5\Omega||5.1\Omega}{9.5\Omega||5.1\Omega + 5.1\Omega + 0\Omega} + \frac{0.4\Omega}{0.4\Omega + 10\Omega + 0\Omega}\right] = 3.9\text{ mW} \tag{7}$$

Case 2 - Nonlinear Pull-Up/Down Resistor:

$$P_{GDO} = f_{sw}\text{ x}\left[4.5\text{A x}\int_0^{T_{R_Sys}}(V_{CC} - V_{OUT}(t))dt + 5.3\text{A x}\int_0^{T_{F_Sys}} V_{OUT}(t)\,dt\right] \tag{8}$$

where

- $V_{OUT(t)}$ is the gate-driver OUT pin voltage during the turnon and turnoff period. In cases where the output is saturated for some time, this value can be simplified as a constant-current source (1.5 A at turnon and 2.0 A at turnoff) charging or discharging a load capacitor. Then, the $V_{OUT(t)}$ waveform will be linear and the T_{R_Sys} and T_{F_Sys} can be easily predicted.

For some scenarios, if only one of the pullup or pulldown circuits is saturated and another one is not, the P_{GDO} is a combination of case 1 and case 2, and the equations can be easily identified for the pullup and pulldown based on this discussion.

Use Equation 9 to calculate the total gate-driver loss dissipated in the UCC23511 gate driver, P_{GD}.

$$P_{GD} = P_{GDQ} + P_{GDO} = 30\text{mW} + 3.9\text{mW} = 33.9\text{mW} \tag{9}$$

9.2.2.4 Estimating Junction Temperature

Use Equation 10 to estimate the junction temperature (T_J) of UCC23511.

$$T_J = T_C + \Psi_{JT} \times P_{GD} \tag{10}$$

where

- T_C is the UCC23511 case-top temperature measured with a thermocouple or some other instrument.
- Ψ_{JT} is the junction-to-top characterization parameter from the table.

Using the junction-to-top characterization parameter (Ψ_{JT}) instead of the junction-to-case thermal resistance ($R_{\theta JC}$) can greatly improve the accuracy of the junction temperature estimation. The majority of the thermal energy of most ICs is released into the PCB through the package leads, whereas only a small percentage of the total energy is released through the top of the case (where thermocouple measurements are usually conducted). The $R_{\theta JC}$ resistance can only be used effectively when most of the thermal energy is released through the case, such as with metal packages or when a heat sink is applied to an IC package. In all other cases, use of $R_{\theta JC}$ will inaccurately estimate the true junction temperature. The Ψ_{JT} parameter is experimentally derived by assuming

that the dominant energy leaving through the top of the IC will be similar in both the testing environment and the application environment. As long as the recommended layout guidelines are observed, junction temperature estimations can be made accurately to within a few degrees Celsius.

9.2.2.5 Selecting V_{CC} Capacitor

Bypass capacitors for V_{CC} is essential for achieving reliable performance. TI recommends choosing low-ESR and low-ESL, surface-mount, multi-layer ceramic capacitors (MLCC) with sufficient voltage ratings, temperature coefficients, and capacitance tolerances. A 50-V, 10-µF MLCC and a 50-V, 0.22-µF MLCC are selected for the C_{VCC} capacitor. If the bias power supply output is located a relatively long distance from the V_{CC} pin, a tantalum or electrolytic capacitor with a value greater than 10 µF should be used in parallel with C_{VCC}.

Note

DC bias on some MLCCs will impact the actual capacitance value. For example, a 25-V, 1-µF X7R capacitor is measured to be only 500 nF when a DC bias of 15-V_{DC} is applied.

10 Power Supply Recommendations

The recommended input supply voltage (V_{CC}) for the UCC23511 device is from 14V to 33V. The lower limit of the range of output bias-supply voltage (V_{CC}) is determined by the internal UVLO protection feature of the device. V_{CC} voltage should not fall below the UVLO threshold for normal operation, or else the gate-driver outputs can become clamped low for more than 20 µs by the UVLO protection feature. The higher limit of the V_{CC} range depends on the maximum gate voltage of the power device that is driven by the UCC23511 device, and should not exceed the recommended maximum V_{CC} of 33 V. A local bypass capacitor should be placed between the V_{CC} and V_{EE} pins, with a value of 220-nF to 10-µF for device biasing. TI recommends placing an additional 100-nF capacitor in parallel with the device biasing capacitor for high frequency filtering. Both capacitors should be positioned as close to the device as possible. Low-ESR, ceramic surface-mount capacitors are recommended.

If only a single, primary-side power supply is available in an application, isolated power can be generated for the secondary side with the help of a transformer driver such as Texas Instruments' SN6501 or SN6505A. For such applications, detailed power supply design and transformer selection recommendations are available in *SN6501 Transformer Driver for Isolated Power Supplies* data sheet and *SN6505A Low-Noise 1-A Transformer Drivers for Isolated Power Supplies* data sheet.

Copyright © 2020 Texas Instruments Incorporated

11 Layout

11.1 Layout Guidelines

Designers must pay close attention to PCB layout to achieve optimum performance for the UCC23511. Some key guidelines are:

- Component placement:
  - Low-ESR and low-ESL capacitors must be connected close to the device between the V_{CC} and V_{EE} pins to bypass noise and to support high peak currents when turning on the external power transistor.
  - To avoid large negative transients on the V_{EE} pins connected to the switch node, the parasitic inductances between the source of the top transistor and the source of the bottom transistor must be minimized.
- Grounding considerations:
  - Limiting the high peak currents that charge and discharge the transistor gates to a minimal physical area is essential. This limitation decreases the loop inductance and minimizes noise on the gate terminals of the transistors. The gate driver must be placed as close as possible to the transistors.
- High-voltage considerations:
  - To ensure isolation performance between the primary and secondary side, avoid placing any PCB traces or copper below the driver device. A PCB cutout or groove is recommended in order to prevent contamination that may compromise the isolation performance.
- Thermal considerations:
  - A large amount of power may be dissipated by the UCC23511 if the driving voltage is high, the load is heavy, or the switching frequency is high. Proper PCB layout can help dissipate heat from the device to the PCB and minimize junction-to-board thermal impedance (θ_{JB}).
  - Increasing the PCB copper connecting to the V_{CC} and V_{EE} pins is recommended, with priority on maximizing the connection to V_{EE}. However, the previously mentioned high-voltage PCB considerations must be maintained.
  - If the system has multiple layers, TI also recommends connecting the V_{CC} and V_{EE} pins to internal ground or power planes through multiple vias of adequate size. These vias should be located close to the IC pins to maximize thermal conductivity. However, keep in mind that no traces or coppers from different high voltage planes are overlapping.

Copyright © 2020 Texas Instruments Incorporated

11.2 Layout Example

Figure 11-1 shows a PCB layout example with the signals and key components labeled.

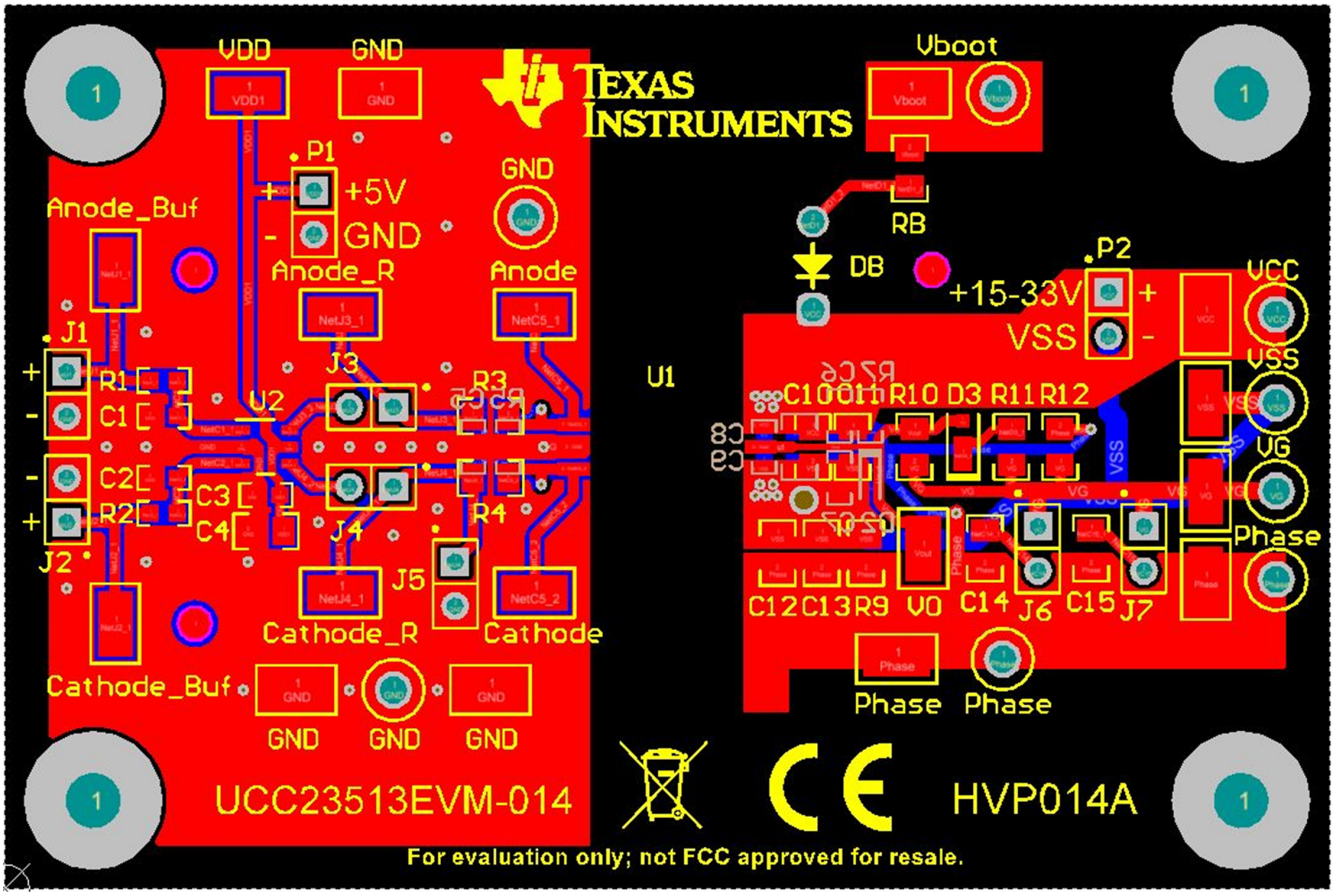

A. No PCB traces or copper are located between the primary and secondary side, which ensures isolation performance.

Figure 11-1. Layout Example

Figure 11-2 and Figure 11-3 show the top and bottom layer traces and copper.

Copyright © 2020 Texas Instruments Incorporated

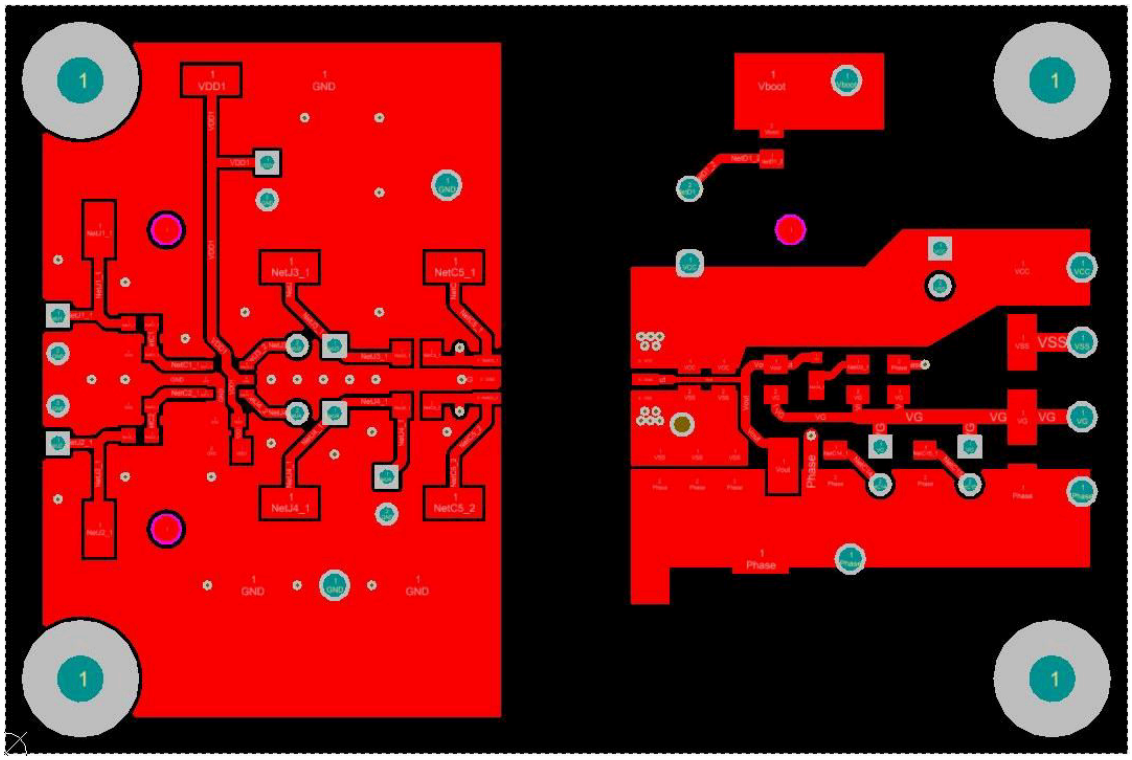

Figure 11-2. Top-Layer Traces and Copper

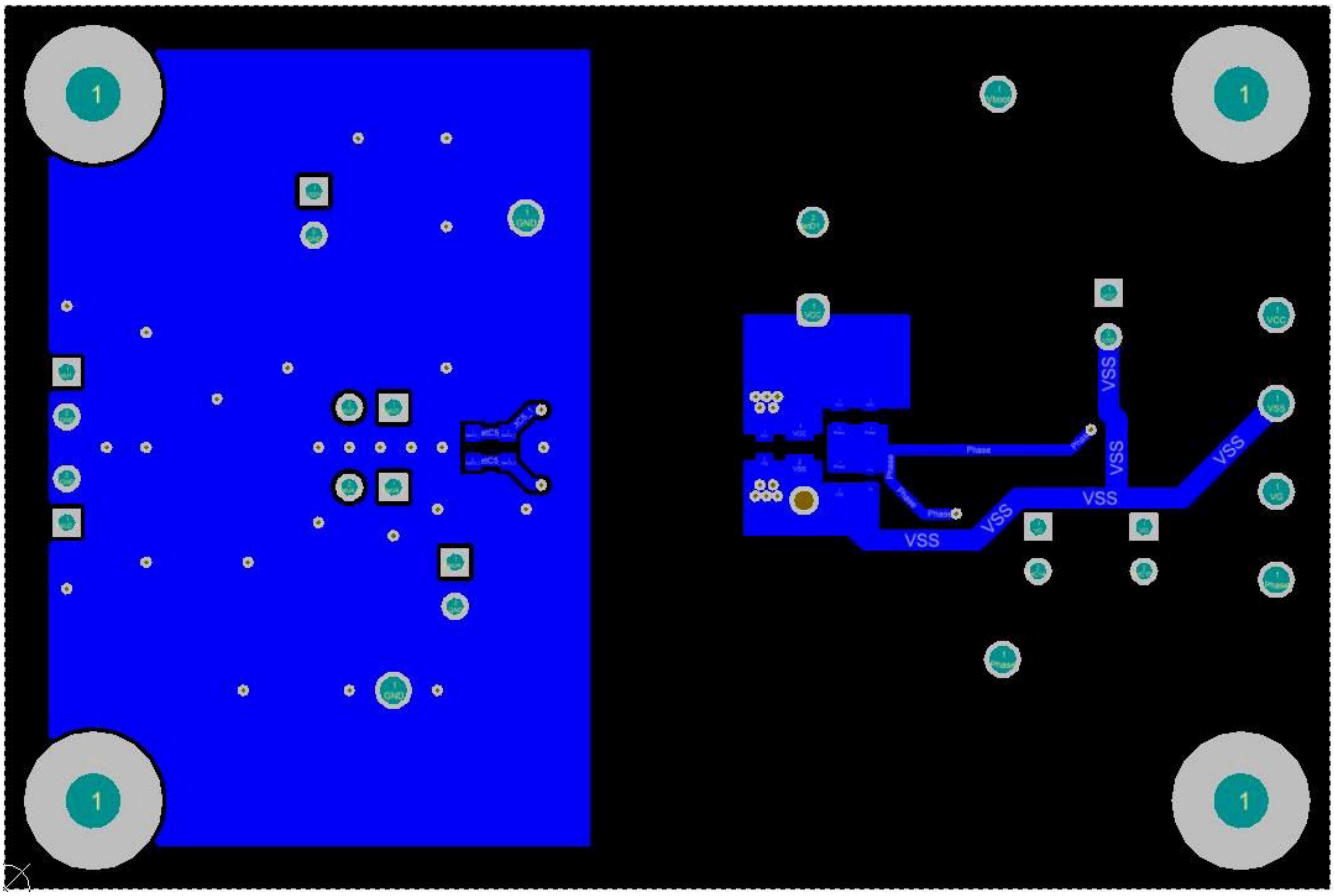

Figure 11-3. Bottom-Layer Traces and Copper (Flipped)

Figure 11-4 shows the 3D layout of the top view of the PCB.

Copyright © 2020 Texas Instruments Incorporated

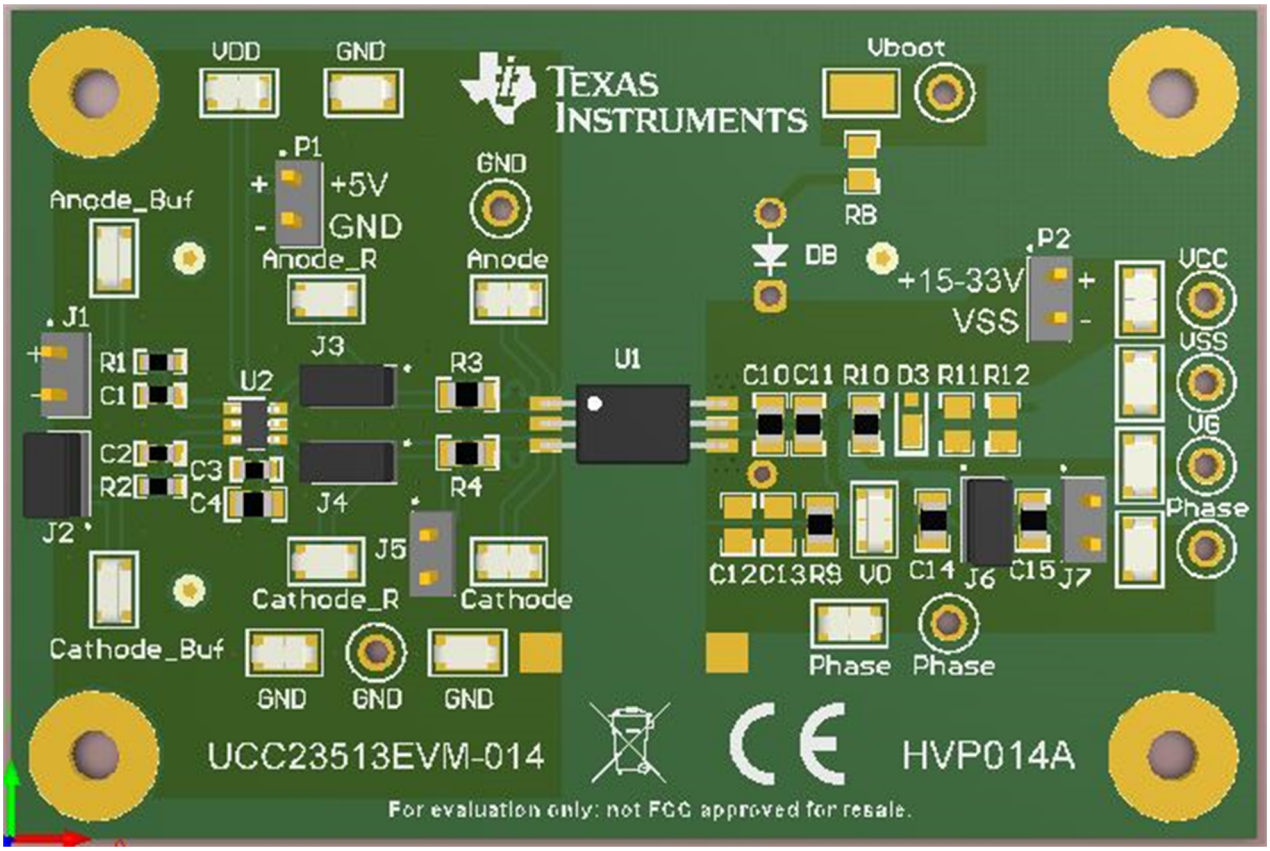

A. The location of the PCB cutout between primary side and secondary sides ensures isolation performance.

Figure 11-4. 3-D PCB View

11.3 PCB Material

Use standard FR-4 UL94V-0 printed circuit board. This PCB is preferred over cheaper alternatives because of lower dielectric losses at high frequencies, less moisture absorption, greater strength and stiffness, and the self-extinguishing flammability-characteristics.

11.4 Custom Design With WEBENCH® Tools

Click here to create a custom design using the UCC3511 device with the WEBENCH® Power Designer.

1. Start by entering the input voltage (V_{IN}), output voltage (V_{OUT}), and output current (I_{OUT}) requirements.
2. Optimize the design for key parameters such as efficiency, footprint, and cost using the optimizer dial.
3. Compare the generated design with other possible solutions from Texas Instruments.

The WEBENCH Power Designer provides a customized schematic along with a list of materials with real-time pricing and component availability.

In most cases, these actions are available:

- Run electrical simulations to see important waveforms and circuit performance
- Run thermal simulations to understand board thermal performance
- Export customized schematic and layout into popular CAD formats
- Print PDF reports for the design, and share the design with colleagues

Get more information about WEBENCH tools at www.ti.com/WEBENCH.

12 Mechanical, Packaging, and Orderable Information

The following pages include mechanical, packaging, and orderable information. This information is the most current data available for the designated devices. This data is subject to change without notice and revision of this document. For browser-based versions of this data sheet, refer to the left-hand navigation.

Copyright © 2020 Texas Instruments Incorporated

PACKAGING INFORMATION

Orderable part number	Status (1)	Material type (2)	Package | Pins	Package qty | Carrier	RoHS (3)	Lead finish/ Ball material (4)	MSL rating/ Peak reflow (5)	Op temp (°C)	Part marking (6)
UCC23511BDWY	Obsolete	Production	SOIC (DWY) | 6	-	-	Call TI	Call TI	-40 to 125	UC23511B
UCC23511BDWYR	Active	Production	SOIC (DWY) | 6	850 | LARGE T&R	Yes	NIPDAU	Level-2-260C-1 YEAR	-40 to 125	UC23511B
UCC23511BDWYR.A	Active	Production	SOIC (DWY) | 6	850 | LARGE T&R	Yes	NIPDAU	Level-2-260C-1 YEAR	-40 to 125	UC23511B
UCC23511BDWYR.B	Active	Production	SOIC (DWY) | 6	850 | LARGE T&R	Yes	NIPDAU	Level-2-260C-1 YEAR	-40 to 125	UC23511B
UCC23511DWY	Obsolete	Production	SOIC (DWY) | 6	-	-	Call TI	Call TI	-40 to 125	UCC23511
UCC23511DWYR	Active	Production	SOIC (DWY) | 6	850 | LARGE T&R	Yes	NIPDAU	Level-2-260C-1 YEAR	-40 to 125	UCC23511
UCC23511DWYR.A	Active	Production	SOIC (DWY) | 6	850 | LARGE T&R	Yes	NIPDAU	Level-2-260C-1 YEAR	-40 to 125	UCC23511
UCC23511DWYR.B	Active	Production	SOIC (DWY) | 6	850 | LARGE T&R	Yes	NIPDAU	Level-2-260C-1 YEAR	-40 to 125	UCC23511

(1) **Status:** For more details on status, see our product life cycle.

(2) **Material type:** When designated, preproduction parts are prototypes/experimental devices, and are not yet approved or released for full production. Testing and final process, including without limitation quality assurance, reliability performance testing, and/or process qualification, may not yet be complete, and this item is subject to further changes or possible discontinuation. If available for ordering, purchases will be subject to an additional waiver at checkout, and are intended for early internal evaluation purposes only. These items are sold without warranties of any kind.

(3) **RoHS values:** Yes, No, RoHS Exempt. See the TI RoHS Statement for additional information and value definition.

(4) **Lead finish/Ball material:** Parts may have multiple material finish options. Finish options are separated by a vertical ruled line. Lead finish/Ball material values may wrap to two lines if the finish value exceeds the maximum column width.

(5) **MSL rating/Peak reflow:** The moisture sensitivity level ratings and peak solder (reflow) temperatures. In the event that a part has multiple moisture sensitivity ratings, only the lowest level per JEDEC standards is shown. Refer to the shipping label for the actual reflow temperature that will be used to mount the part to the printed circuit board.

(6) **Part marking:** There may be an additional marking, which relates to the logo, the lot trace code information, or the environmental category of the part.

Multiple part markings will be inside parentheses. Only one part marking contained in parentheses and separated by a "~" will appear on a part. If a line is indented then it is a continuation of the previous line and the two combined represent the entire part marking for that device.

Important Information and Disclaimer: The information provided on this page represents TI's knowledge and belief as of the date that it is provided. TI bases its knowledge and belief on information provided by third parties, and makes no representation or warranty as to the accuracy of such information. Efforts are underway to better integrate information from third parties. TI has taken and continues to take reasonable steps to provide representative and accurate information but may not have conducted destructive testing or chemical analysis on incoming materials and chemicals. TI and TI suppliers consider certain information to be proprietary, and thus CAS numbers and other limited information may not be available for release.

In no event shall TI's liability arising out of such information exceed the total purchase price of the TI part(s) at issue in this document sold by TI to Customer on an annual basis.

OTHER QUALIFIED VERSIONS OF UCC23511 :

- Automotive : UCC23511-Q1

NOTE: Qualified Version Definitions:

- Automotive - Q100 devices qualified for high-reliability automotive applications targeting zero defects

TAPE AND REEL INFORMATION

REEL DIMENSIONS

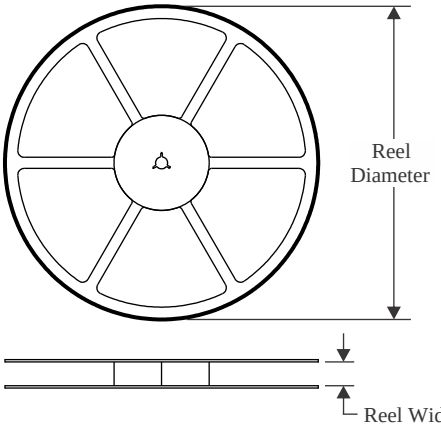

TAPE DIMENSIONS

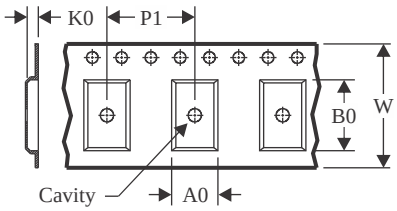

A0	Dimension designed to accommodate the component width
B0	Dimension designed to accommodate the component length
K0	Dimension designed to accommodate the component thickness
W	Overall width of the carrier tape
P1	Pitch between successive cavity centers

QUADRANT ASSIGNMENTS FOR PIN 1 ORIENTATION IN TAPE

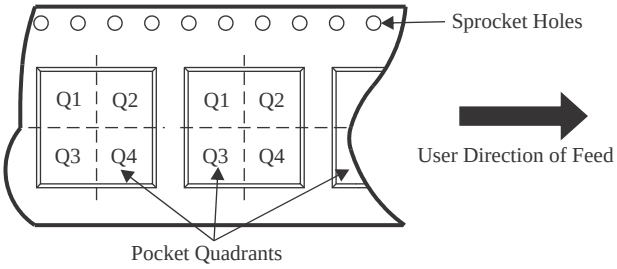

*All dimensions are nominal

Device	Package Type	Package Drawing	Pins	SPQ	Reel Diameter (mm)	Reel Width W1 (mm)	A0 (mm)	B0 (mm)	K0 (mm)	P1 (mm)	W (mm)	Pin1 Quadrant
UCC23511BDWYR	SOIC	DWY	6	850	330.0	16.4	12.15	5.0	3.9	16.0	16.0	Q1
UCC23511BDWYR	SOIC	DWY	6	850	330.0	16.4	12.15	5.0	3.9	16.0	16.0	Q1
UCC23511DWYR	SOIC	DWY	6	850	330.0	16.4	12.15	5.0	3.9	16.0	16.0	Q1
UCC23511DWYR	SOIC	DWY	6	850	330.0	16.4	12.15	5.0	3.9	16.0	16.0	Q1

TAPE AND REEL BOX DIMENSIONS

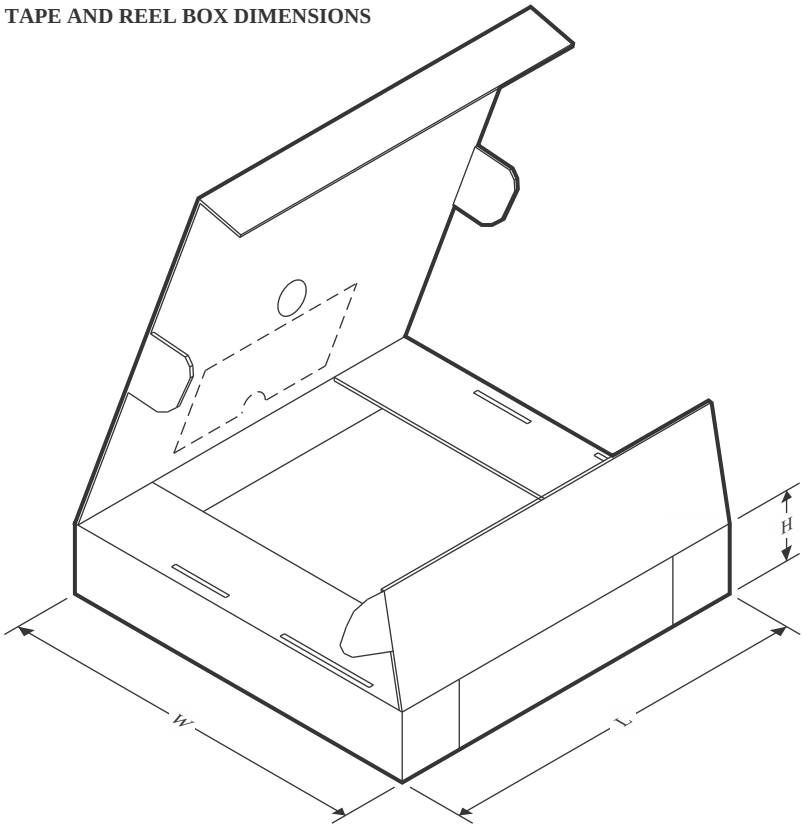

*All dimensions are nominal

Device	Package Type	Package Drawing	Pins	SPQ	Length (mm)	Width (mm)	Height (mm)
UCC23511BDWYR	SOIC	DWY	6	850	353.0	353.0	32.0
UCC23511BDWYR	SOIC	DWY	6	850	356.0	356.0	35.0
UCC23511DWYR	SOIC	DWY	6	850	353.0	353.0	32.0
UCC23511DWYR	SOIC	DWY	6	850	356.0	356.0	35.0

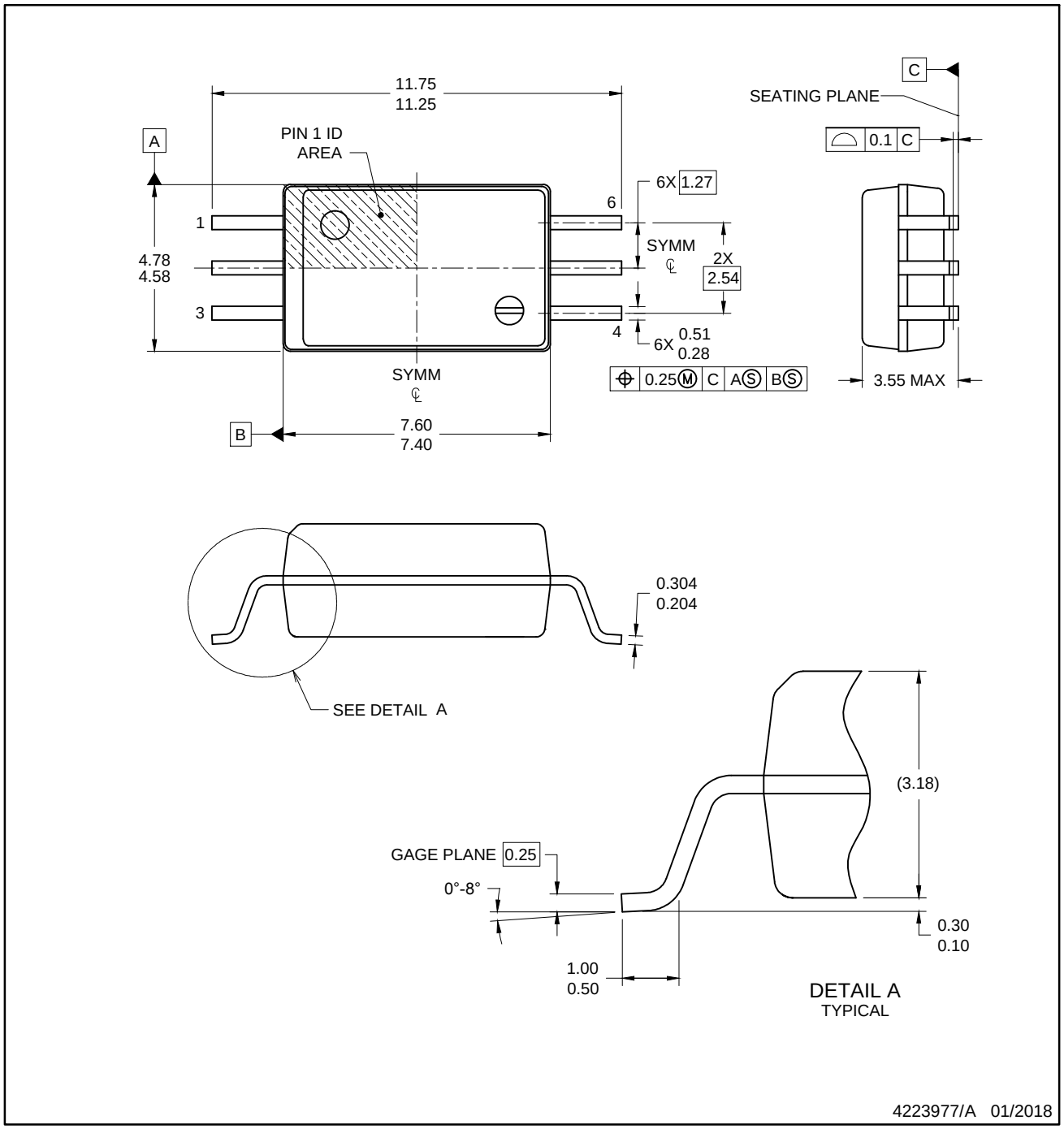

NOTES:

1. All linear dimensions are in millimeters. Any dimensions in parenthesis are for reference only. Dimensioning and tolerancing per ASME Y14.5M.
2. This drawing is subject to change without notice.
3. This dimension does not include mold flash, protrusions, or gate burrs. Mold flash, protrusions, or gate burrs shall not exceed 0.15 per side.
4. This dimension does not include interlead flash. Interlead flash shall not exceed 0.70 per side.

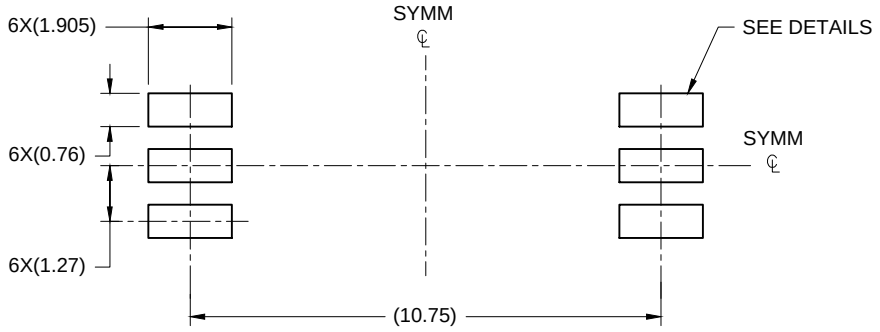

LAND PATTERN EXAMPLE
SCALE:6X

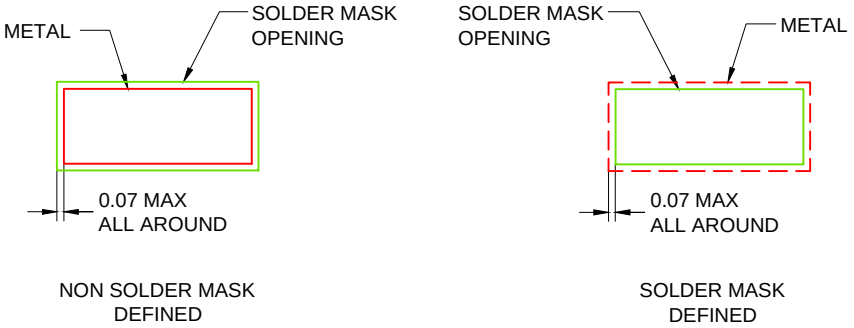

SOLDER MASK DETAAILS

4223977/A 01/2018

NOTES: (continued)

5. Publication IPC-7351 may have alternate designs.
6. Solder mask tolerances between and around signal pads can vary based on board fabrication site.

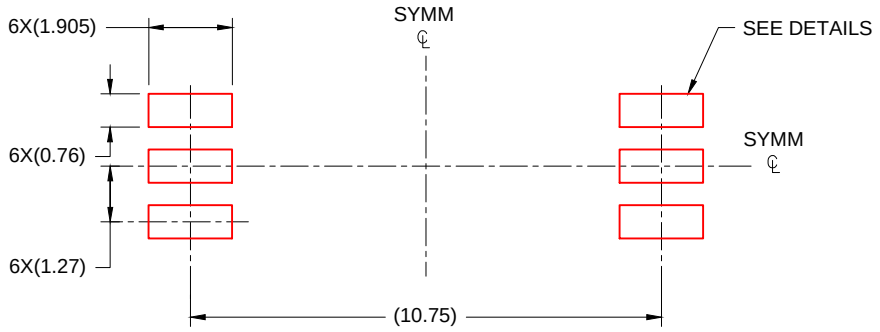

SOLDER PASTE EXAMPLE
BASED ON 0.125 mm THICK STENCIL
SCALE: 6X

4223977/A 01/2018

NOTES: (continued)

7. Laser cutting apertures with trapezoidal walls and rounded corners may offer better paste release. IPC-7525 may have alternate design recommendations.
8. Board assembly site may have different recommendations for stencil design.

IMPORTANT NOTICE AND DISCLAIMER

TI PROVIDES TECHNICAL AND RELIABILITY DATA (INCLUDING DATA SHEETS), DESIGN RESOURCES (INCLUDING REFERENCE DESIGNS), APPLICATION OR OTHER DESIGN ADVICE, WEB TOOLS, SAFETY INFORMATION, AND OTHER RESOURCES “AS IS” AND WITH ALL FAULTS, AND DISCLAIMS ALL WARRANTIES, EXPRESS AND IMPLIED, INCLUDING WITHOUT LIMITATION ANY IMPLIED WARRANTIES OF MERCHANTABILITY, FITNESS FOR A PARTICULAR PURPOSE OR NON-INFRINGEMENT OF THIRD PARTY INTELLECTUAL PROPERTY RIGHTS.

These resources are intended for skilled developers designing with TI products. You are solely responsible for (1) selecting the appropriate TI products for your application, (2) designing, validating and testing your application, and (3) ensuring your application meets applicable standards, and any other safety, security, regulatory or other requirements.

These resources are subject to change without notice. TI grants you permission to use these resources only for development of an application that uses the TI products described in the resource. Other reproduction and display of these resources is prohibited. No license is granted to any other TI intellectual property right or to any third party intellectual property right. TI disclaims responsibility for, and you will fully indemnify TI and its representatives against, any claims, damages, costs, losses, and liabilities arising out of your use of these resources.

TI’s products are provided subject to TI’s Terms of Sale or other applicable terms available either on ti.com or provided in conjunction with such TI products. TI’s provision of these resources does not expand or otherwise alter TI’s applicable warranties or warranty disclaimers for TI products.

TI objects to and rejects any additional or different terms you may have proposed.

Mailing Address: Texas Instruments, Post Office Box 655303, Dallas, Texas 75265
Copyright © 2025, Texas Instruments Incorporated