# TS3A27518E-Q1 6-bit, 1-of-2 Multiplexer or Demultiplexer With Integrated IEC L-4 ESD and 1.8-V Logic Compatible Control Inputs

## 1 Features

- Qualified for automotive applications
- AEC-Q100 qualified with the following results:
  - Device temperature grade 2: –40°C to 105°C ambient operating temperature range
  - Device HBM ESD classification level H2
  - Device CDM ESD classification level C3B
- Functional Safety-Capable
  - Documentation available to aid functional safety system design
- 1.65-V to 3.6-V single-supply operation
- Powered-off protection (isolation in powerdown mode, Hi-Z when $V_+ = 0$)
- Low capacitance switches, 21.5 pF (typical)
- Bandwidth up to 240 MHz for high-speed rail-to-rail signal handling
- Crosstalk and off isolation of −62 dB
- 1.8-V logic threshold compatibility for control inputs
- 3.6-V tolerant control inputs
- ESD performance: NC/NO ports
  - ±6-kV contact discharge (IEC 61000-4-2)
- 24-pin TSSOP (7.80 mm × 4.40 mm) and 24-pin QFN (4.00 mm × 4.00 mm) package

## 2 Applications

- SD/SDIO and MMC two port MUX
- PC VGA video MUX/video systems
- Audio and video signal routing

## 3 Description

The TS3A27518E-Q1 is a 6-bit 1-of-2 multiplexer-demultiplexer designed to operate from 1.65 V to 3.6 V. This device can handle both digital and analog signals, and signals up to $V_+$ can be transmitted in either direction. The TS3A27518E-Q1 has two control pins, each controlling three 1-of-2 muxes at the same time, and an enable pin that is used to put all outputs in high-impedance mode. The control pins are compatible with 1.8-V logic thresholds and are backward compatible with 2.5-V and 3.3-V logic thresholds as well.

The TS3A27518E-Q1 allows any SD, SDIO, and multimedia card host controllers to be expanded out to multiple cards or peripherals because the SDIO interface consists of 6-bits: CMD, CLK, and Data[0:3] signals. The TS3A27518E-Q1 has two control pins that give additional flexibility to the user, for example, the ability to mux two different audio-video signals in equipment such as an LCD television, an LCD monitor, or a notebook docking station.

**Package Information**(1)

| PART NUMBER | PACKAGE | BODY SIZE (NOM) |
|---|---|---|
| TS3A27518E-Q1 | RTW (WQFN, 24) | 4.00 mm × 4.00 mm |
| | PW (TSSOP, 24) | 7.80 mm × 4.40 mm |

(1) For all available packages, see the orderable addendum at the end of the data sheet.

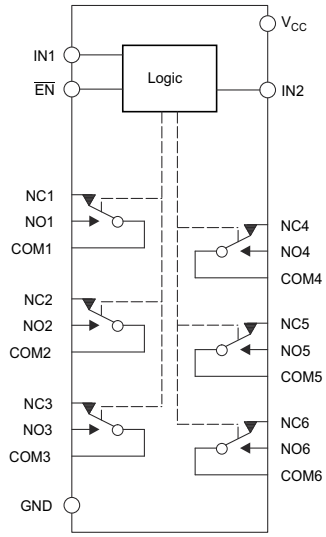


Copyright © 2016, Texas Instruments Incorporated

**Functional Block Diagram**

An IMPORTANT NOTICE at the end of this data sheet addresses availability, warranty, changes, use in safety-critical applications, intellectual property matters and other important disclaimers. PRODUCTION DATA.

## Table of Contents

**1 Features**....1
**2 Applications**....1
**3 Description**....1
**4 Revision History**....2
**5 Pin Configuration and Functions**....3
**6 Specifications**....4
6.1 Absolute Maximum Ratings....4
6.2 ESD Ratings....4
6.3 Recommended Operating Conditions....4
6.4 Thermal Information....5
6.5 Electrical Characteristics for 3.3-V Supply....5
6.6 Electrical Characteristics for 2.5-V Supply....7
6.7 Electrical Characteristics for 1.8-V Supply....9
6.8 Typical Characteristics....11
**7 Parameter Measurement Information**....14
**8 Detailed Description**....19
8.1 Overview....19
8.2 Functional Block Diagram....19
8.3 Feature Description....19
8.4 Device Functional Modes....19
**9 Application and Implementation**....20
9.1 Application Information....20
9.2 Typical Application....20
**10 Power Supply Recommendations**....21
**11 Layout**....22
11.1 Layout Guidelines....22
11.2 Layout Example....22
**12 Device and Documentation Support**....23
12.1 Documentation Support....23
12.2 Receiving Notification of Documentation Updates....23
12.3 Support Resources....23
12.4 Trademarks....23
12.5 Electrostatic Discharge Caution....23
12.6 Glossary....23
**13 Mechanical, Packaging, and Orderable Information**....23

## 4 Revision History

NOTE: Page numbers for previous revisions may differ from page numbers in the current version.

**Changes from Revision C (January 2019) to Revision D (November 2022)** — **Page**

- Updated the numbering format for tables, figures, and cross-references throughout the document....1
- Added functional safety-capable information to the *Features* section....1

**Changes from Revision B (May 2012) to Revision C (January 2019)** — **Page**

- Added *Device Information* table, *ESD Ratings* table, *Recommended Operating Conditions* table, *Feature Description* section, *Device Functional Modes*, *Application and Implementation* section, *Power Supply Recommendations* section, *Layout* section, *Device and Documentation Support* section, and *Mechanical, Packaging, and Orderable Information* section....1
- Updated the numbering format for tables, figures, and cross-references throughout the document....1

**Changes from Revision A (March 2012) to Revision B (May 2012)** — **Page**

- Changed device temp grade from 1 to 2, removed maximum withstand voltage info, changed C3B2 to C3B.. 1
- Added extra row to ordering information table....1
- Changed $T_A$ = –40°C to 85°C to $T_A$ = –40°C to 105°C....5
- Changed Full to –40°C to 85°C and added extra row with 85°C to 105°C and limits -7.5 to 7.5....5
- Changed Full to –40°C to 85°C and added extra row with 85°C to 105°C with limits 68....5
- Changed Full to –40°C to 85°C and added extra row with 85°C to 105°C with limits 70....5
- Changed Full to –40°C to 85°C and added extra row with 85°C to 105°C with limits 5 µA....5
- Changed $T_A$ = –40°C to 85°C to $T_A$ = –40°C to 105°C....7
- Changed Full to –40°C to 85°C and added extra row with 85°C to 105°C with limits 38.4....7
- Changed Full to –40°C to 85°C and added extra row with 85°C to 105°C with limits 3....7
- Changed $T_A$ = –40°C to 85°C to $T_A$ = –40°C to 105°C....9
- Changed Full to –40°C to 85°C and added extra row with 85°C to 105°C and limits –5.8 to 5.8....9
- Changed Full to –40°C to 85°C and added extra row with 85°C to 105°C with limits 35.2....9
- Changed Full to –40°C to 85°C and added extra row with 85°C to 105°C with limits 2.5....9


Copyright © 2022 Texas Instruments Incorporated

# 5 Pin Configuration and Functions

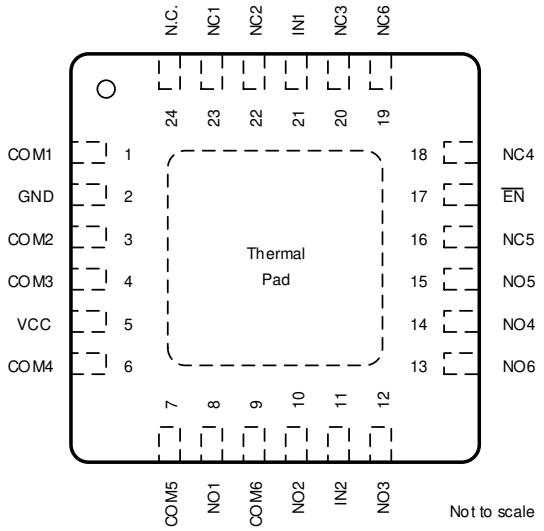


**Figure 5-1. RTW Package, 24-Pin WQFN (Top View)**

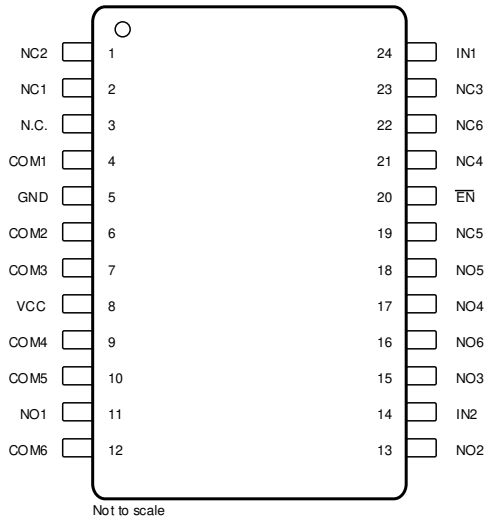


**Figure 5-2. PW Package, 24-Pin TSSOP (Top View)**

**Table 5-1. Pin Functions**

| PIN | | | TYPE(1) | DESCRIPTION |
|---|---|---|---|---|
| NAME | RTW | PW | | |
| COM1 | 1 | 4 | I/O | Common-signal path |
| COM2 | 3 | 6 | I/O | Common-signal path |
| COM3 | 4 | 7 | I/O | Common-signal path |
| COM4 | 6 | 9 | I/O | Common-signal path |
| COM5 | 7 | 10 | I/O | Common-signal path |
| COM6 | 9 | 12 | I/O | Common-signal path |
| $\overline{EN}$ | 17 | 20 | I | Digital control to enable or disable all signal paths |
| GND | 2 | 5 | — | Ground. |
| IN1 | 21 | 24 | I | Digital control to connect COM to NC or NO |
| IN2 | 11 | 14 | I | Digital control to connect COM to NC or NO |
| N.C. | 24 | 3 | — | Not connected |
| NC1 | 23 | 2 | I/O | Normally closed-signal path |
| NC2 | 22 | 1 | I/O | Normally closed-signal path |
| NC3 | 20 | 23 | I/O | Normally closed-signal path |
| NC4 | 18 | 21 | I/O | Normally closed-signal path |
| NC5 | 16 | 19 | I/O | Normally closed-signal path |
| NC6 | 19 | 22 | I/O | Normally closed-signal path |
| NO1 | 8 | 11 | I/O | Normally open-signal path |
| NO2 | 10 | 13 | I/O | Normally open-signal path |
| NO3 | 12 | 15 | I/O | Normally open-signal path |
| NO4 | 14 | 17 | I/O | Normally open-signal path |
| NO5 | 15 | 18 | I/O | Normally open-signal path |
| NO6 | 13 | 16 | I/O | Normally open-signal path |
| $V_{CC}$ | 5 | 8 | — | Voltage supply |

(1) I = input, O = output

# 6 Specifications

## 6.1 Absolute Maximum Ratings

over operating free-air temperature range (unless otherwise noted)[1]

| | | | MIN | MAX | UNIT |
|---|---|---|---|---|---|
| $V_+$ | Supply voltage range[2] | | –0.5 | 4.6 | V |
| $V_{NC}$<br>$V_{NO}$<br>$V_{COM}$ | Analog voltage range[2] [3] [4] | | –0.5 | 4.6 | V |
| $I_K$ | Analog port diode current[5] | $V_+ < V_{NC}, V_{NO}, V_{COM} < 0$ | –50 | | mA |
| $I_{NC}$<br>$I_{NO}$<br>$I_{COM}$ | ON-state switch current[6] | $V_{NC}, V_{NO}, V_{COM} = 0$ to $V_+$ | –50 | 50 | mA |
| $V_I$ | Digital input voltage range[2] [3] | | –0.5 | 4.6 | V |
| $I_{IK}$ | Digital input clamp current[2] [3] | $V_{IO} < V_I < 0$ | –50 | | mA |
| $I_+$ | Continuous current through $V_+$ | | | 100 | mA |
| $I_{GND}$ | Continuous current through GND | | –100 | | mA |
| $T_{stg}$ | Storage temperature range | | –65 | 150 | °C |

(1) Stresses beyond those listed under *Absolute Maximum Ratings* may cause permanent damage to the device. These are stress ratings only, which do not imply functional operation of the device at these or any other conditions beyond those indicated under *Recommended Operating Conditions*. Exposure to absolute-maximum-rated conditions for extended periods may affect device reliability.
(2) All voltages are with respect to ground, unless otherwise specified.
(3) The input and output voltage ratings may be exceeded if the input and output clamp-current ratings are observed.
(4) This value is limited to 5.5 V maximum.
(5) Requires clamp diodes on analog port to $V_+$.
(6) Pulse at 1-ms duration <10% duty cycle

## 6.2 ESD Ratings

| | | | VALUE | UNIT |
|---|---|---|---|---|
| $V_{(ESD)}$ | Electrostatic discharge | Human-body model (HBM), per ANSI/ESDA/JEDEC JS-001[1]<br>AEC-Q100 Classification Level H2 | ±2000 | V |
| | | Charged-device model (CDM), per JEDEC specification JESD22-C101[2]<br>AEC-Q100 Classification Level C3B | ±750 | |

(1) JEDEC document JEP155 states that 500-V HBM allows safe manufacturing with a standard ESD control process..
(2) JEDEC document JEP157 states that 250-V CDM allows safe manufacturing with a standard ESD control process.

## 6.3 Recommended Operating Conditions

over operating free-air temperature range (unless otherwise noted)

| | | MIN | MAX | UNIT |
|---|---|---|---|---|
| Supply voltage | $V_{CC}$ | 1.65 | 3.6 | V |
| Analog signal voltage | $V_{NC}$ | 0 | $V_{CC}$ | V |
| | $V_{NO}$ | | | |
| | $V_{COM}$ | | | |
| Digital input voltage | $V_I$ | 0 | $V_{CC}$ | V |


Copyright © 2022 Texas Instruments Incorporated

## 6.4 Thermal Information

| THERMAL METRIC [1] | | TS3A27518E | | UNIT |
|---|---|---|---|---|
| | | PW (TSSOP) | RTW (WQFN) | |
| | | 24 PINS | 24 PINS | |
| $R_{\theta JA}$ | Junction-to-ambient thermal resistance | 104 | 40.7 | °C/W |
| $R_{\theta JC(top)}$ | Junction-to-case (top) thermal resistance | 51.6 | 42.9 | °C/W |
| $R_{\theta JB}$ | Junction-to-board thermal resistance | 57.5 | 19.2 | °C/W |
| $\psi_{JT}$ | Junction-to-top characterization parameter | 9.9 | 1 | °C/W |
| $\psi_{JB}$ | Junction-to-board characterization parameter | 57.1 | 19.3 | °C/W |
| $R_{\theta JC(bot)}$ | Junction-to-case (bottom) thermal resistance | — | 8 | °C/W |

(1) For more information about traditional and new thermal metrics, see the *Semiconductor and IC Package Thermal Metrics* application report.

## 6.5 Electrical Characteristics for 3.3-V Supply

$V_+$ = 3 V to 3.6 V, $T_A$ = –40°C to 105°C (unless otherwise noted)

| PARAMETER | SYMBOL | TEST CONDITIONS | | $T_A$ | $V_+$ | MIN | TYP | MAX | UNIT |
|---|---|---|---|---|---|---|---|---|---|
| **Analog Switch** | | | | | | | | | |
| ON-state resistance | $r_{on}$ | 0 ≤ ($V_{NC}$ or $V_{NO}$) ≤ $V_+$, $I_{COM}$ = –32 mA, | Switch ON, See Figure 7-1 | 25°C | 3 V | | 4.4 | 6.2 | Ω |
| | | | | Full | | | | 7.6 | |
| ON-state resistance match between channels | $\Delta r_{on}$ | $V_{NC}$ or $V_{NO}$ = 2.1 V, $I_{COM}$ = –32 mA, | Switch ON, See Figure 7-1 | 25°C | 3 V | | 0.3 | 0.7 | Ω |
| | | | | Full | | | | 0.8 | |
| ON-state resistance flatness | $r_{on(flat)}$ | 0 ≤ ($V_{NC}$ or $V_{NO}$) ≤ $V_+$, $I_{COM}$ = –32 mA, | Switch ON, See Figure 7-2 | 25°C | 3 V | | 0.95 | 2.1 | Ω |
| | | | | Full | | | | 2.3 | |
| NC, NO OFF leakage current | $I_{NC(OFF)}$, $I_{NO(OFF)}$ | $V_{NC}$ or $V_{NO}$ = 1 V, $V_{COM}$ = 3 V, or $V_{NC}$ or $V_{NO}$ = 3 V, $V_{COM}$ = 1 V, | Switch OFF, See Figure 7-2 | 25°C | 3.6 V | –0.5 | 0.05 | 0.5 | µA |
| | | | | Full | | –7 | | 7 | |
| | $I_{NC(PWROFF)}$, $I_{NO(PWROFF)}$ | $V_{NC}$ or $V_{NO}$ = 0 to 3.6 V, $V_{COM}$ = 3.6 V to 0, or $V_{NC}$ or $V_{NO}$ = 3.6 V to 0, $V_{COM}$ = 0 to 3.6 V, | | 25°C | 0 V | –1 | 0.05 | 1 | |
| | | | | Full | | –12 | | 12 | |
| COM OFF leakage current | $I_{COM(OFF)}$ | $V_{NC}$ or $V_{NO}$ = 3 V, $V_{COM}$ = 1 V, or $V_{NC}$ or $V_{NO}$ = 1 V, $V_{COM}$ = 3 V, | Switch OFF, See Figure 7-2 | 25°C | 3.6 V | –1 | 0.01 | 1 | µA |
| | | | | Full | | –2 | | 2 | |
| | $I_{COM(PWROFF)}$ | $V_{NC}$ or $V_{NO}$ = 3.6 V to 0, $V_{COM}$ = 0 to 3.6 V, or $V_{NC}$ or $V_{NO}$ = 0 to 3.6 V, $V_{COM}$ = 3.6 V to 0, | | 25°C | 0 V | –1 | 0.02 | 1 | |
| | | | | Full | | –12 | | 12 | |
| NC, NO ON leakage current | $I_{NO(ON)}$, $I_{NC(ON)}$ | $V_{NC}$ or $V_{NO}$ = 1 V, $V_{COM}$ = Open, or $V_{NC}$ or $V_{NO}$ = 3 V, $V_{COM}$ = Open, | Switch ON, See Figure 7-3 | 25°C | 3.6 V | –2.5 | 0.04 | 2.2 | µA |
| | | | | –40°C to 85°C | | –7 | | 7 | |
| | | | | 85°C to 105°C | | –7.5 | | 7.5 | |
| COM ON leakage current | $I_{COM(ON)}$ | $V_{NC}$ or $V_{NO}$ = Open, $V_{COM}$ = 1 V, or $V_{NC}$ or $V_{NO}$ = Open, $V_{COM}$ = 3 V, | Switch ON, See Figure 7-3 | 25°C | 3.6 V | –2 | 0.03 | 2 | µA |
| | | | | Full | | –7 | | 7 | |
| **Digital Control Inputs (IN1, IN2, $\overline{EN}$)[1]** | | | | | | | | | |
| Input logic high | $V_{IH}$ | | | Full | 3.6 V | 1.2 | | 3.6 | V |
| Input logic low | $V_{IL}$ | | | Full | 3.6 V | 0 | | 0.65 | V |

## 6.5 Electrical Characteristics for 3.3-V Supply (continued)

$V_+$ = 3 V to 3.6 V, $T_A$ = –40°C to 105°C (unless otherwise noted)

| PARAMETER | SYMBOL | TEST CONDITIONS | | $T_A$ | $V_+$ | MIN | TYP | MAX | UNIT |
|---|---|---|---|---|---|---|---|---|---|
| Input leakage current | $I_{IH}$, $I_{IL}$ | $V_I$ = $V_+$ or 0 | | 25°C | 3.6 V | –0.1 | 0.05 | 0.1 | µA |
| | | | | Full | | –2.5 | | 2.5 | |
| **Dynamic** | | | | | | | | | |
| Turn-on time | $t_{ON}$ | $V_{COM}$ = $V_+$, $R_L$ = 50 Ω, | $C_L$ = 35 pF, See Figure 7-5 | 25°C | 3.3 V | | 18.1 | 59 | ns |
| | | | | –40°C to 85°C | 3 V to 3.6 V | | | 60 | |
| | | | | 85°C to 105°C | | | | 68 | |
| Turn-off time | $t_{OFF}$ | $V_{COM}$ = $V_+$, $R_L$ = 50 Ω, | $C_L$ = 35 pF, See Figure 7-5 | 25°C | 3.3 V | | 25.4 | 60.6 | ns |
| | | | | –40°C to 85°C | 3 V to 3.6 V | | | 61 | |
| | | | | 85°C to 105°C | | | | 70 | |
| Break-before-make time | $t_{BBM}$ | $V_{NC}$ = $V_{NO}$ = $V_+$/2, $R_L$ = 50 Ω, | $C_L$ = 35 pF, See Figure 7-6 | 25°C | 3.3 V | 4 | 11.1 | 22.7 | ns |
| | | | | Full | 3 V to 3.6 V | | | 28 | |
| Charge injection | $Q_C$ | $V_{GEN}$ = 0, $R_{GEN}$ = 0, | $C_L$ = 0.1 nF, See Figure 7-10 | 25°C | 3.3 V | | 0.81 | | pC |
| NC, NO OFF capacitance | $C_{NC(OFF)}$, $C_{NO(OFF)}$ | $V_{NC}$ or $V_{NO}$ = $V_+$ or GND, Switch OFF, | See Figure 7-4 | 25°C | 3.3 V | | 13 | | pF |
| COM OFF capacitance | $C_{COM(OFF)}$ | $V_{NC}$ or $V_{NO}$ = $V_+$ or GND, Switch OFF, | See Figure 7-4 | | 3.3 V | | 8.5 | | pF |
| NC, NO ON capacitance | $C_{NC(ON)}$, $C_{NO(ON)}$ | $V_{NC}$ or $V_{NO}$ = $V_+$ or GND, Switch OFF, | See Figure 7-4 | 25°C | 3.3 V | | 21.5 | | pF |
| COM ON capacitance | $C_{COM(ON)}$ | $V_{COM}$ = $V_+$ or GND, Switch ON, | See Figure 7-4 | 25°C | 3.3 V | | 21.5 | | pF |
| Digital input capacitance | $C_I$ | $V_I$ = $V_+$ or GND | See Figure 7-4 | 25°C | 3.3 V | | 2 | | pF |
| Bandwidth | BW | $R_L$ = 50 Ω, | Switch ON, See Figure 7-6 | 25°C | 3.3 V | | 240 | | MHz |
| OFF isolation | $O_{ISO}$ | $R_L$ = 50 Ω, f = 10 MHz, | Switch OFF, See Figure 7-8 | 25°C | 3.3 V | | –62 | | dB |
| Crosstalk | $X_{TALK}$ | $R_L$ = 50 Ω, f = 10 MHz, | Switch ON, See Figure 7-9 | 25°C | 3.3 V | | –62 | | dB |
| Crosstalk adjacent | $X_{TALK(ADJ)}$ | $R_L$ = 50 Ω, f = 10 MHz, | Switch ON, See Figure 7-9 | 25°C | 3.3 V | | –71 | | dB |
| Total harmonic distortion | THD | $R_L$ = 600 Ω, $C_L$ = 50 pF, | f = 20 Hz to 20 kHz, See Figure 7-11 | 25°C | 3.3 V | | 0.05 | | % |
| **Supply** | | | | | | | | | |
| Positive supply current | $I_+$ | $V_I$ = $V_+$ or GND, | Switch ON or OFF | 25°C | 3.6 V | | 0.04 | 0.3 | µA |
| | | | | –40°C to 85°C | | | | 3 | |
| | | | | 85°C to 105°C | | | | 5 | |

(1) All unused digital inputs of the device must be held at $V_+$ or GND to ensure proper device operation. Refer to the TI application report, *Implications of Slow or Floating CMOS Inputs*, literature number SCBA004.


Copyright © 2022 Texas Instruments Incorporated

## 6.6 Electrical Characteristics for 2.5-V Supply

$V_+$ = 2.3 V to 2.7 V, $T_A$ = –40°C to 105°C (unless otherwise noted)

| PARAMETER | SYMBOL | TEST CONDITIONS | | $T_A$ | $V_+$ | MIN | TYP | MAX | UNIT |
|---|---|---|---|---|---|---|---|---|---|
| **Analog Switch** | | | | | | | | | |
| ON-state resistance | $r_{on}$ | 0 ≤ ($V_{NC}$ or $V_{NO}$) ≤ $V_+$, $I_{COM}$ = –32 mA, | Switch ON, See Figure 7-1 | 25°C | 2.3 V | | 5.5 | 9.6 | Ω |
| | | | | Full | | | | 11.5 | |
| ON-state resistance match between channels | $\Delta r_{on}$ | $V_{NC}$ or $V_{NO}$ = 1.6 V, $I_{COM}$ = –32 mA, | Switch ON, See Figure 7-1 | 25°C | 2.3 V | | 0.3 | 0.8 | Ω |
| | | | | Full | | | | 0.9 | |
| ON-state resistance flatness | $r_{on(flat)}$ | 0 ≤ ($V_{NC}$ or $V_{NO}$) ≤ $V_+$, $I_{COM}$ = –32 mA, | Switch ON, See Figure 7-2 | 25°C | 2.3 V | | 0.91 | 2.2 | Ω |
| | | | | Full | | | | 2.3 | |
| NC, NO OFF leakage current | $I_{NC(OFF)}$, $I_{NO(OFF)}$ | $V_{NC}$ or $V_{NO}$ = 0.5 V, $V_{COM}$ = 2.3 V, or $V_{NC}$ or $V_{NO}$ = 2.3 V, $V_{COM}$ = 0.5 V, | Switch OFF, See Figure 7-2 | 25°C | 2.7 V | –0.3 | 0.04 | 0.3 | μA |
| | | | | Full | | –6 | | 6 | |
| | $I_{NC(PWROFF)}$, $I_{NO(PWROFF)}$ | $V_{NC}$ or $V_{NO}$ = 0 to 2.7 V, $V_{COM}$ =2.7 V to 0, or $V_{NC}$ or $V_{NO}$ = 2.7 V to 0, $V_{COM}$ = 0 to 2.7 V, | | 25°C | 0 V | –0.6 | 0.02 | 0.6 | |
| | | | | Full | | –10 | | 10 | |
| COM OFF leakage current | $I_{COM(OFF)}$ | $V_{NC}$ or $V_{NO}$ = 0.5 V, $V_{COM}$ = 2.3 V, or $V_{NC}$ or $V_{NO}$ = 2.3 V, $V_{COM}$ = 0.5 V, | Switch OFF, See Figure 7-2 | 25°C | 2.7 V | –0.7 | 0.02 | 0.7 | μA |
| | | | | Full | | –1 | | 1 | |
| | $I_{COM(PWROFF)}$ | $V_{NC}$ or $V_{NO}$ = 2.7 V to 0, $V_{COM}$ = 0 to 2.7 V, or $V_{NC}$ or $V_{NO}$ = 0 to 2.7 V, $V_{COM}$ = 2.7 V to 0, | | 25°C | 0 V | –0.7 | 0.02 | 0.7 | |
| | | | | Full | | –7.2 | | 7.2 | |
| NC, NO ON leakage current | $I_{NO(ON)}$, $I_{NC(ON)}$ | $V_{NC}$ or $V_{NO}$ = 0.5 V or 2.3 V, $V_{COM}$ = Open, | Switch ON, See Figure 7-3 | 25°C | 2.7 V | –2.1 | 0.03 | 2.1 | μA |
| | | | | Full | | –6 | | 6 | |
| COM ON leakage current | $I_{COM(ON)}$ | $V_{NC}$ or $V_{NO}$ = Open, $V_{COM}$ = 0.5 V, or $V_{NC}$ or $V_{NO}$ = Open, $V_{COM}$ = 2.3 V, | Switch ON, See Figure 7-3 | 25°C | 2.7 V | –2 | 0.02 | 2 | μA |
| | | | | Full | | –5.7 | | 5.7 | |
| **Digital Control Inputs (IN1, IN2, $\overline{EN}$)**[1] | | | | | | | | | |
| Input logic high | $V_{IH}$ | $V_I$ = $V_+$ or GND | | Full | 2.7 V | 1.15 | | 3.6 | V |
| Input logic low | $V_{IL}$ | | | Full | 2.7 V | 0 | | 0.55 | V |
| Input leakage current | $I_{IH}$, $I_{IL}$ | $V_I$ = $V_+$ or 0 | | 25°C | 2.7 V | -0.1 | 0.01 | 0.1 | μA |
| | | | | Full | | –2.1 | | 2.1 | |
| **Dynamic** | | | | | | | | | |
| Turn-on time | $t_{ON}$ | $V_{COM}$ = V+, $R_L$ = 50 Ω, | $C_L$ = 35 pF, See Figure 7-5 | 25°C | 2.5 V | | 17.2 | 36.8 | ns |
| | | | | Full | 2.3 V to 2.7 V | | | 42.5 | |
| Turn-off time | $t_{OFF}$ | $V_{COM}$ = V+, $R_L$ = 50 Ω, | $C_L$ = 35 pF, See Figure 7-5 | 25°C | 2.5 V | | 17.1 | 29.8 | ns |
| | | | | –40°C to 85°C | 2.3 V to 2.7 V | | | 34.4 | |
| | | | | 85°C to 105°C | | | | 38.4 | |
| Break-before-make time | $t_{BBM}$ | $V_{NC}$ = $V_{NO}$ = $V_+$/2, $R_L$ = 50 Ω, | $C_L$ = 35 pF, See Figure 7-6 | 25°C | 2.5 V | 4.5 | 13 | 30 | ns |
| | | | | Full | 2.3 V to 2.7 V | | | 33.3 | |
| Charge injection | $Q_C$ | $V_{GEN}$ = 0, $R_{GEN}$ = 0, | $C_L$ = 0.1 nF, See Figure 7-10 | 25°C | 2.5 V | | 0.47 | | pC |
| NC, NO OFF capacitance | $C_{NC(OFF)}$, $C_{NO(OFF)}$ | $V_{NC}$ or $V_{NO}$ = $V_+$ or GND, Switch OFF, | See Figure 7-4 | 25°C | 2.5 V | | 13.5 | | pF |
| COM OFF capacitance | $C_{COM(OFF)}$ | $V_{NC}$ or $V_{NO}$ = $V_+$ or GND, Switch OFF, | See Figure 7-4 | | 2.5 V | | 9 | | pF |

## 6.6 Electrical Characteristics for 2.5-V Supply (continued)

$V_+$ = 2.3 V to 2.7 V, $T_A$ = –40°C to 105°C (unless otherwise noted)

| PARAMETER | SYMBOL | TEST CONDITIONS | | $T_A$ | $V_+$ | MIN | TYP | MAX | UNIT |
|---|---|---|---|---|---|---|---|---|---|
| NC, NO ON capacitance | $C_{NC(ON)}$, $C_{NO(ON)}$ | $V_{NC}$ or $V_{NO}$ = $V_+$ or GND, Switch OFF, | See Figure 7-4 | 25°C | 2.5 V | | 22 | | pF |
| COM ON capacitance | $C_{COM(ON)}$ | $V_{COM}$ = $V_+$ or GND, Switch ON, | See Figure 7-4 | 25°C | 2.5 V | | 22 | | pF |
| Digital input capacitance | $C_I$ | $V_I$ = $V_+$ or GND | See Figure 7-4 | 25°C | 2.5 V | | 2 | | pF |
| Bandwidth | BW | $R_L$ = 50 Ω, | Switch ON, See Figure 7-6 | 25°C | 2.5 V | | 240 | | MHz |
| OFF isolation | $O_{ISO}$ | $R_L$ = 50 Ω, f = 10 MHz, | Switch OFF, See Figure 7-8 | 25°C | 2.5 V | | –62 | | dB |
| Crosstalk | $X_{TALK}$ | $R_L$ = 50 Ω, f = 10 MHz, | Switch ON, See Figure 7-9 | 25°C | 2.5 V | | –62 | | dB |
| Crosstalk adjacent | $X_{TALK(ADJ)}$ | $R_L$ = 50 Ω, f = 10 MHz, | Switch ON, See Figure 7-9 | 25°C | 2.5 V | | –71 | | dB |
| Total harmonic distortion | THD | $R_L$ = 600 Ω, $C_L$ = 50 pF, | f = 20 Hz to 20 kHz, See Figure 7-11 | 25°C | 2.5 V | | 0.06 | | % |
| **Supply** | | | | | | | | | |
| Positive supply current | $I_+$ | $V_I$ = $V_+$ or GND, | Switch ON or OFF | 25°C | 2.7 V | | 0.01 | 0.1 | μA |
| | | | | –40°C to 85°C | | | | 2 | |
| | | | | 85°C to 105°C | | | | 3 | |

(1) All unused digital inputs of the device must be held at $V_+$ or GND to ensure proper device operation. Refer to the TI application report, *Implications of Slow or Floating CMOS Inputs*, literature number SCBA004.


Copyright © 2022 Texas Instruments Incorporated

## 6.7 Electrical Characteristics for 1.8-V Supply

$V_+$ = 1.65 V to 1.95 V, $T_A$ = –40°C to 105°C (unless otherwise noted)

| PARAMETER | SYMBOL | TEST CONDITIONS | | $T_A$ | $V_+$ | MIN | TYP | MAX | UNIT |
|---|---|---|---|---|---|---|---|---|---|
| **Analog Switch** | | | | | | | | | |
| ON-state resistance | $r_{on}$ | 0 ≤ ($V_{NC}$ or $V_{NO}$) ≤ $V_+$, $I_{COM}$ = –32 mA, | Switch ON, See Figure 7-1 | 25°C | 1.65 V | | 7.1 | 14.4 | Ω |
| | | | | Full | | | | 16.3 | |
| ON-state resistance match between channels | $\Delta r_{on}$ | $V_{NC}$ or $V_{NO}$ = 1.5 V, $I_{COM}$ = –32 mA, | Switch ON, See Figure 7-1 | 25°C | 1.65 V | | 0.3 | 1 | Ω |
| | | | | Full | | | | 1.2 | |
| ON-state resistance flatness | $r_{on(flat)}$ | 0 ≤ ($V_{NC}$ or $V_{NO}$) ≤ $V_+$, $I_{COM}$ = –32 mA, | Switch ON, See Figure 7-2 | 25°C | 1.65 V | | 2.7 | 5.5 | Ω |
| | | | | Full | | | | 7.3 | |
| NC, NO OFF leakage current | $I_{NC(OFF)}$, $I_{NO(OFF)}$ | $V_{NC}$ or $V_{NO}$ = 0.3 V, $V_{COM}$ = 1.65 V, or $V_{NC}$ or $V_{NO}$ = 1.65 V, $V_{COM}$ = 0.3 V | Switch OFF, See Figure 7-2 | 25°C | 1.95 V | –0.25 | 0.03 | 0.25 | μA |
| | | | | Full | | –5 | | 5 | |
| | $I_{NC(PWROFF)}$, $I_{NO(PWROFF)}$ | $V_{NC}$ or $V_{NO}$ = 1.95 V to 0, $V_{COM}$ = 0 to 1.95 V, or $V_{NC}$ or $V_{NO}$ = 0 to 1.95 V, $V_{COM}$ = 1.95 V to 0, | | 25°C | 0 V | –0.4 | 0.01 | 0.4 | μA |
| | | | | Full | | –7.2 | | 7.2 | |
| COM OFF leakage current | $I_{COM(OFF)}$, $I_{COM(OFF)}$ | $V_{NC}$ or $V_{NO}$ = 0.3 V, $V_{COM}$ = 1.65 V, or $V_{NC}$ or $V_{NO}$ = 1.65 V, $V_{COM}$ = 0.3 V | Switch OFF, See Figure 7-2 | 25°C | 1.95 V | –0.4 | 0.02 | 0.4 | μA |
| | | | | Full | | –0.9 | | 0.9 | |
| | $I_{COM(PWROFF)}$, $I_{COM(PWROFF)}$ | $V_{NC}$ or $V_{NO}$ = 1.95 V to 0, $V_{COM}$ = 0 to 1.95 V, or $V_{NC}$ or $V_{NO}$ = 0 to 1.95 V, $V_{COM}$ = 1.95 V to 0, | | 25°C | 0 V | –0.4 | 0.02 | 0.4 | μA |
| | | | | –40°C to 85°C | | –5 | | 5 | |
| | | | | 85°C to 105°C | | –5.8 | | 5.8 | |
| NC, NO ON leakage current | $I_{NO(ON)}$, $I_{NC(ON)}$ | $V_{NC}$ or $V_{NO}$ = 0.3 V, $V_{COM}$ = Open, or $V_{NC}$ or $V_{NO}$ = 1.65 V, $V_{COM}$ = Open, | Switch ON, See Figure 7-3 | 25°C | 1.95 V | –2 | 0.02 | 2 | μA |
| | | | | Full | | –5.2 | | 5.2 | |
| COM ON leakage current | $I_{COM(ON)}$ | $V_{NC}$ or $V_{NO}$ = Open, $V_{COM}$ = 0.3 V, or $V_{NC}$ or $V_{NO}$ = Open, $V_{COM}$ = 1.65 V, | Switch ON, See Figure 7-3 | 25°C | 1.95 V | –2 | 0.02 | 2 | μA |
| | | | | Full | | –5.2 | | 5.2 | |
| **Digital Control Inputs (IN1, IN2, $\overline{EN}$)**[(1)] | | | | | | | | | |
| Input logic high | $V_{IH}$ | $V_I$ = $V_+$ or GND | | Full | 1.95 V | 1 | | 3.6 | V |
| Input logic low | $V_{IL}$ | | | Full | 1.95 V | 0 | | 0.4 | V |
| Input leakage current | $I_{IH}$, $I_{IL}$ | $V_I$ = $V_+$ or 0 | | 25°C | 1.95 V | -0.1 | 0.01 | 0.1 | μA |
| | | | | Full | | -2.1 | | 2.1 | |
| **Dynamic** | | | | | | | | | |
| Turn-on time | $t_{ON}$ | $V_{COM}$ = $V_+$, $R_L$ = 50 Ω, | $C_L$ = 35 pF, See Figure 7-5 | 25°C | 1.8 V | | 14.1 | 49.3 | ns |
| | | | | Full | 1.65 V to 1.95 V | | | 56.7 | |
| Turn-off time | $t_{OFF}$ | $V_{COM}$ = $V_+$, $R_L$ = 50 Ω, | $C_L$ = 35 pF, See Figure 7-5 | 25°C | 1.8 V | | 16.1 | 26.5 | ns |
| | | | | –40°C to 85°C | 1.65 V to 1.95 V | | | 31.2 | |
| | | | | 85°C to 105°C | | | | 35.2 | |
| Break-before-make time | $t_{BBM}$ | $V_{NC}$ = $V_{NO}$ = $V_+$/2, $R_L$ = 50 Ω, | $C_L$ = 35 pF, See Figure 7-6 | 25°C | 1.8 V | 5.3 | 18.4 | 58 | ns |
| | | | | Full | 1.65 V to 1.95 V | | | 58 | |
| Charge injection | $Q_C$ | $V_{GEN}$ = 0, $R_{GEN}$ = 0, | $C_L$ = 1 nF, See Figure 7-10 | 25°C | 1.8 V | | 0.21 | | pC |

## 6.7 Electrical Characteristics for 1.8-V Supply (continued)

$V_+$ = 1.65 V to 1.95 V, $T_A$ = –40°C to 105°C (unless otherwise noted)

| PARAMETER | SYMBOL | TEST CONDITIONS | | $T_A$ | $V_+$ | MIN | TYP | MAX | UNIT |
|---|---|---|---|---|---|---|---|---|---|
| NC, NO OFF capacitance | $C_{NC(OFF)}$, $C_{NO(OFF)}$ | $V_{NC}$ or $V_{NO}$ = $V_+$ or GND, Switch OFF, | See Figure 7-4 | 25°C | 1.8 V | | 9 | | pF |
| NC, NO ON capacitance | $C_{NC(ON)}$, $C_{NO(ON)}$ | $V_{NC}$ or $V_{NO}$ = $V_+$ or GND, Switch OFF, | See Figure 7-4 | 25°C | 1.8 V | | 22 | | pF |
| COM ON capacitance | $C_{COM(ON)}$ | $V_{COM}$ = $V_+$ or GND, Switch ON, | See Figure 7-4 | 25°C | 1.8 V | | 22 | | pF |
| Digital input capacitance | $C_I$ | $V_I$ = $V_+$ or GND | See Figure 7-4 | 25°C | 1.8 V | | 2 | | pF |
| Bandwidth | BW | $R_L$ = 50 Ω, | Switch ON, See Figure 7-6 | 25°C | 1.8 V | | 240 | | MHz |
| OFF isolation | $O_{ISO}$ | $R_L$ = 50 Ω, f = 10 MHz, | Switch OFF, See Figure 7-8 | 25°C | 1.8 V | | -60 | | dB |
| Crosstalk | $X_{TALK}$ | $R_L$ = 50 Ω, f = 10 MHz, | Switch ON, See Figure 7-9 | 25°C | 1.8 V | | -60 | | dB |
| Crosstalk adjacent | $X_{TALK(ADJ)}$ | $R_L$ = 50 Ω, f = 10 MHz, | Switch ON, See Figure 7-9 | 25°C | 1.8 V | | -71 | | dB |
| Total harmonic distortion | THD | $R_L$ = 600 Ω, $C_L$ = 50 pF, | f = 20 Hz to 20 kHz, See Figure 7-11 | 25°C | 1.8 V | | 0.1 | | % |
| **Supply** | | | | | | | | | |
| Positive supply current | $I_+$ | $V_I$ = $V_+$ or GND, | Switch ON or OFF | 25°C | 1.95 V | | 0.01 | 0.1 | µA |
| | | | | –40°C to 85°C | | | | 1.5 | |
| | | | | 85°C to 105°C | | | | 2.5 | |

(1) All unused digital inputs of the device must be held at $V_+$ or GND to ensure proper device operation. Refer to the TI application report, *Implications of Slow or Floating CMOS Inputs*, literature number SCBA004.


Copyright © 2022 Texas Instruments Incorporated

## 6.8 Typical Characteristics

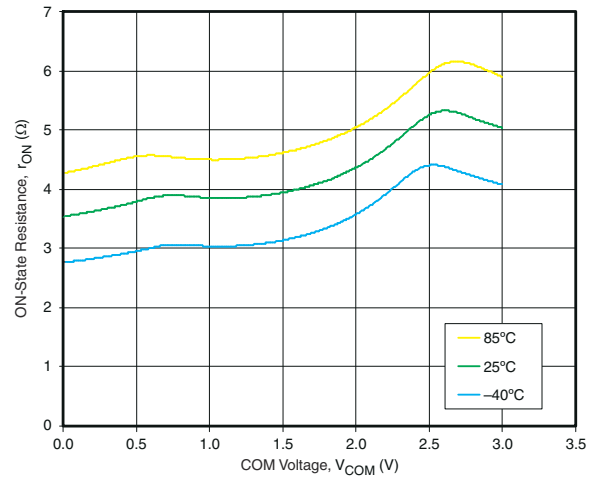


**Figure 6-1. ON-State Resistance vs COM Voltage ($V_{CC}$ = 3 V)**

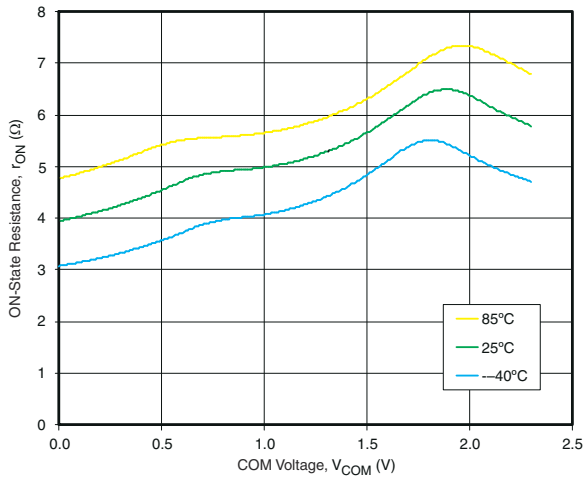


**Figure 6-2. ON-State Resistance vs COM Voltage ($V_{CC}$ = 2.3 V)**

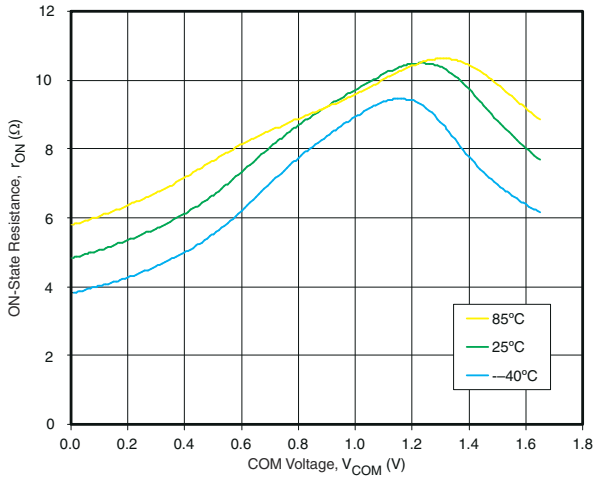


**Figure 6-3. ON-State Resistance vs COM Voltage ($V_{CC}$ = 1.65 V)**

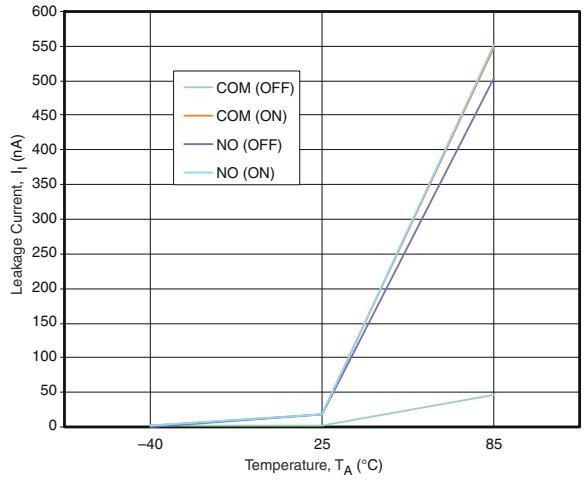


**Figure 6-4. Leakage Current vs Temperature ($V_{CC}$ = 3.3 V)**

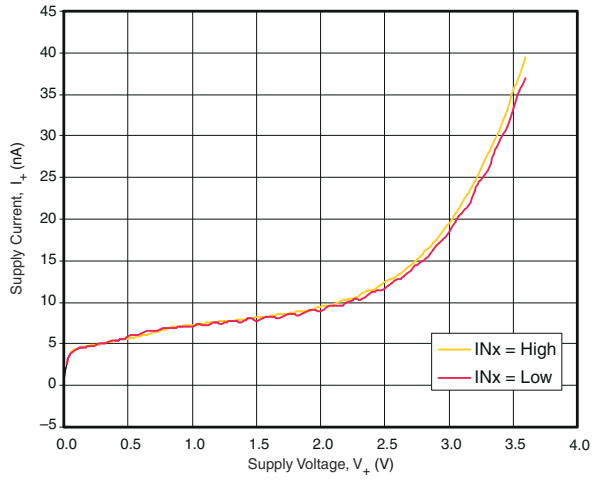


**Figure 6-5. Supply Current vs Supply Voltage**

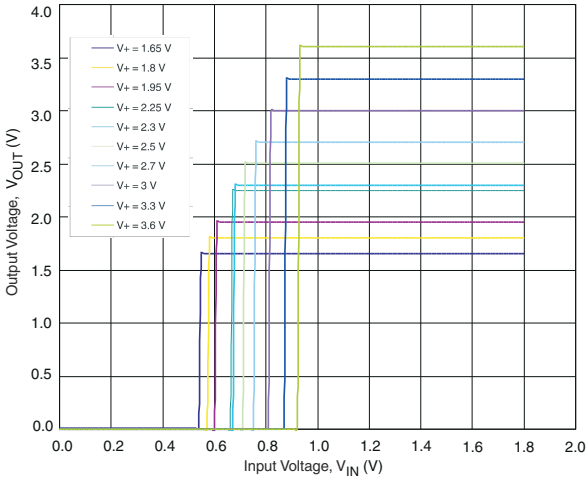


**Figure 6-6. Control Input Thresholds (IN1, $T_A$ = 25°C)**

## 6.8 Typical Characteristics (continued)

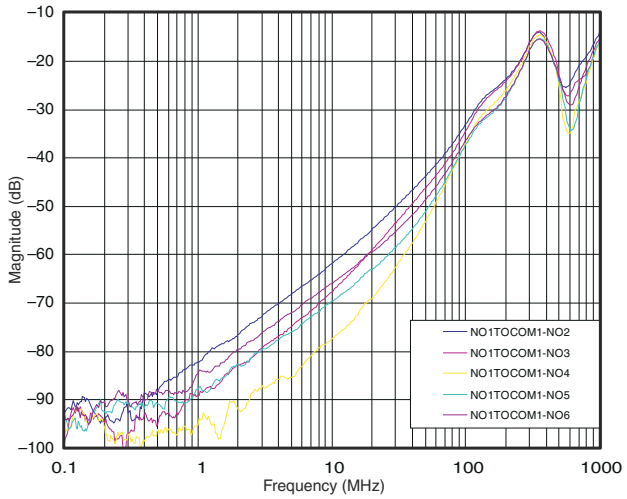


**Figure 6-7. Crosstalk Adjacent**

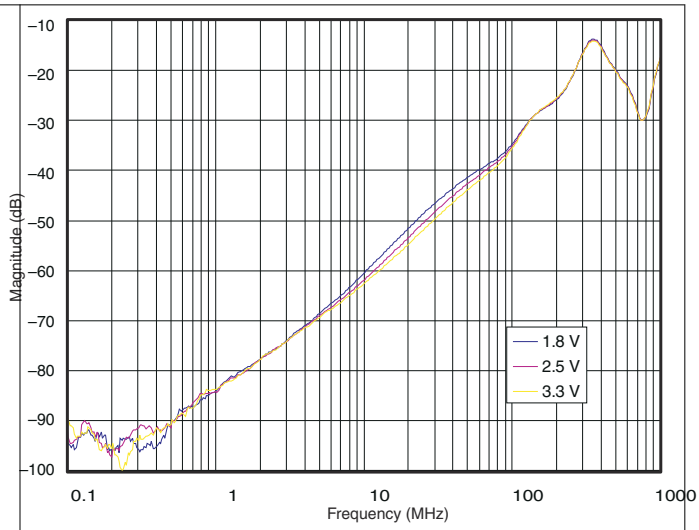


**Figure 6-8. Crosstalk**

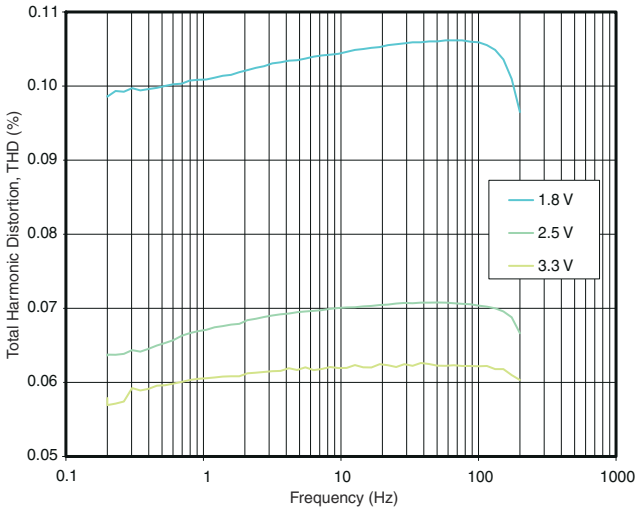


**Figure 6-9. Total Harmonic Distortion vs Frequency**

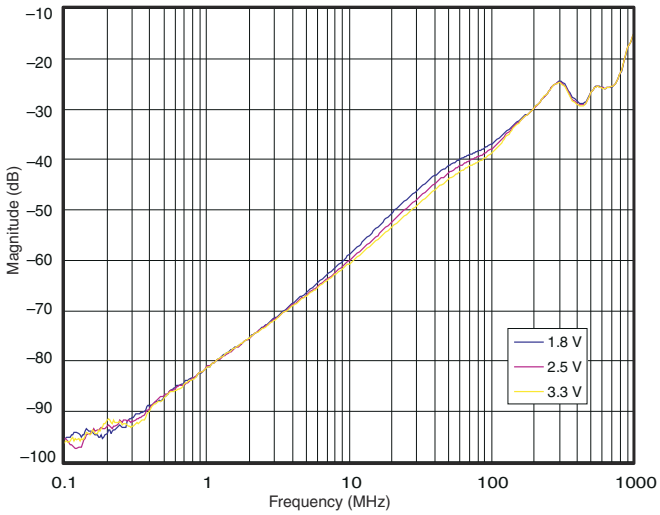


**Figure 6-10. OFF Isolation**

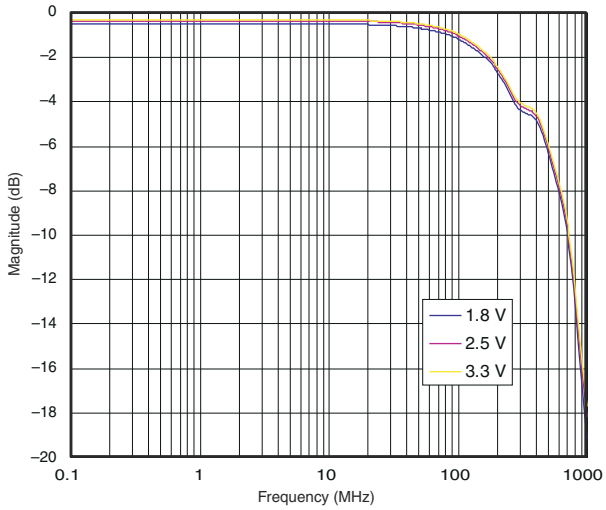


**Figure 6-11. Insertion Loss**

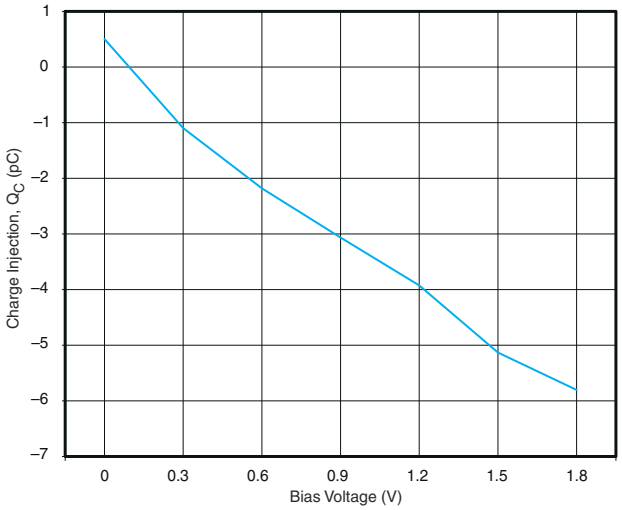


**Figure 6-12. Charge Injection vs Bias Voltage (1.8 V)**


Copyright © 2022 Texas Instruments Incorporated

## 6.8 Typical Characteristics (continued)

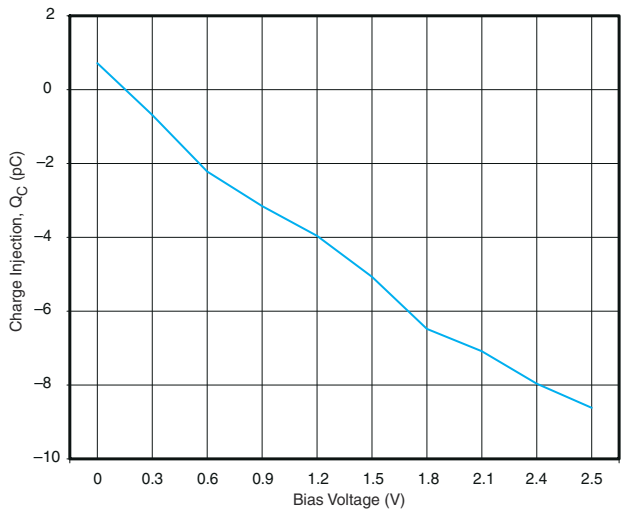


**Figure 6-13. Charge Injection vs Bias Voltage (2.5 V)**

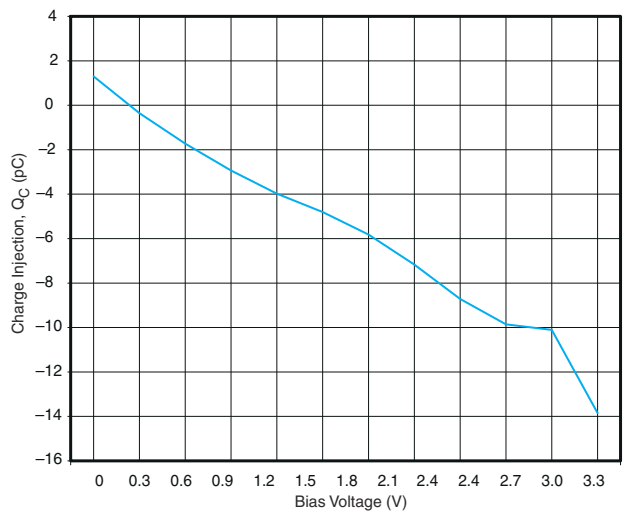


**Figure 6-14. Charge Injection vs Bias Voltage (3.3 V)**

# 7 Parameter Measurement Information

**Table 7-1. Parameter Description**

| SYMBOL | DESCRIPTION |
|---|---|
| $V_{COM}$ | Voltage at COM |
| $V_{NC}$ | Voltage at NC |
| $V_{NO}$ | Voltage at NO |
| $r_{on}$ | Resistance between COM and NC or NO ports when the channel is ON |
| $\Delta r_{on}$ | Difference of $r_{on}$ between channels in a specific device |
| $r_{on(flat)}$ | Difference between the maximum and minimum value of $r_{on}$ in a channel over the specified range of conditions |
| $I_{NC(OFF)}$ | Leakage current measured at the NC port, with the corresponding channel (NC to COM) in the OFF state |
| $I_{NC(ON)}$ | Leakage current measured at the NC port, with the corresponding channel (NC to COM) in the ON state and the output (COM) open |
| $I_{NO(OFF)}$ | Leakage current measured at the NO port, with the corresponding channel (NO to COM) in the OFF state |
| $I_{NO(ON)}$ | Leakage current measured at the NO port, with the corresponding channel (NO to COM) in the ON state and the output (COM) open |
| $I_{COM(OFF)}$ | Leakage current measured at the COM port, with the corresponding channel (COM to NC or NO) in the OFF state |
| $I_{COM(ON)}$ | Leakage current measured at the COM port, with the corresponding channel (COM to NC or NO) in the ON state and the output (NC or NO) open |
| $V_{IH}$ | Minimum input voltage for logic high for the control input (IN, $\overline{EN}$) |
| $V_{IL}$ | Maximum input voltage for logic low for the control input (IN, $\overline{EN}$) |
| $V_I$ | Voltage at the control input (IN, $\overline{EN}$) |
| $I_{IH}$, $I_{IL}$ | Leakage current measured at the control input (IN, $\overline{EN}$) |
| $t_{ON}$ | Turn-on time for the switch. This parameter is measured under the specified range of conditions and by the propagation delay between the digital control (IN) signal and analog output NC or NO) signal when the switch is turning ON. |
| $t_{OFF}$ | Turn-off time for the switch. This parameter is measured under the specified range of conditions and by the propagation delay between the digital control (IN) signal and analog output (NC or NO) signal when the switch is turning OFF. |
| $Q_C$ | Charge injection is a measurement of unwanted signal coupling from the control (IN) input to the analog (NC or NO) output. This is measured in coulomb (C) and measured by the total charge induced due to switching of the control input. Charge injection, $Q_C = C_L \times \Delta V_{COM}$, $C_L$ is the load capacitance and $\Delta V_{COM}$ is the change in analog output voltage. |
| $C_{NC(OFF)}$ | Capacitance at the NC port when the corresponding channel (NC to COM) is OFF |
| $C_{NC(ON)}$ | Capacitance at the NC port when the corresponding channel (NC to COM) is ON |
| $C_{NO(OFF)}$ | Capacitance at the NC port when the corresponding channel (NO to COM) is OFF |
| $C_{NO(ON)}$ | Capacitance at the NC port when the corresponding channel (NO to COM) is ON |
| $C_{COM(OFF)}$ | Capacitance at the COM port when the corresponding channel (COM to NC) is OFF |
| $C_{COM(ON)}$ | Capacitance at the COM port when the corresponding channel (COM to NC) is ON |
| $C_I$ | Capacitance of control input (IN, $\overline{EN}$) |
| $O_{ISO}$ | OFF isolation of the switch is a measurement of OFF-state switch impedance. This is measured in dB in a specific frequency, with the corresponding channel (NC to COM) in the OFF state. |
| $X_{TALK}$ | Crosstalk is a measurement of unwanted signal coupling from an ON channel to an OFF channel (NC1 to NO1). Adjacent crosstalk is a measure of unwanted signal coupling from an ON channel to an adjacent ON channel (NC1 to NC2) .This is measured in a specific frequency and in dB. |
| BW | Bandwidth of the switch. This is the frequency in which the gain of an ON channel is –3 dB below the DC gain. |
| THD | Total harmonic distortion describes the signal distortion caused by the analog switch. This is defined as the ratio of root mean square (RMS) value of the second, third, and higher harmonic to the absolute magnitude of the fundamental harmonic. |
| $I_+$ | Static power-supply current with the control (IN) pin at $V_+$ or GND |


Copyright © 2022 Texas Instruments Incorporated

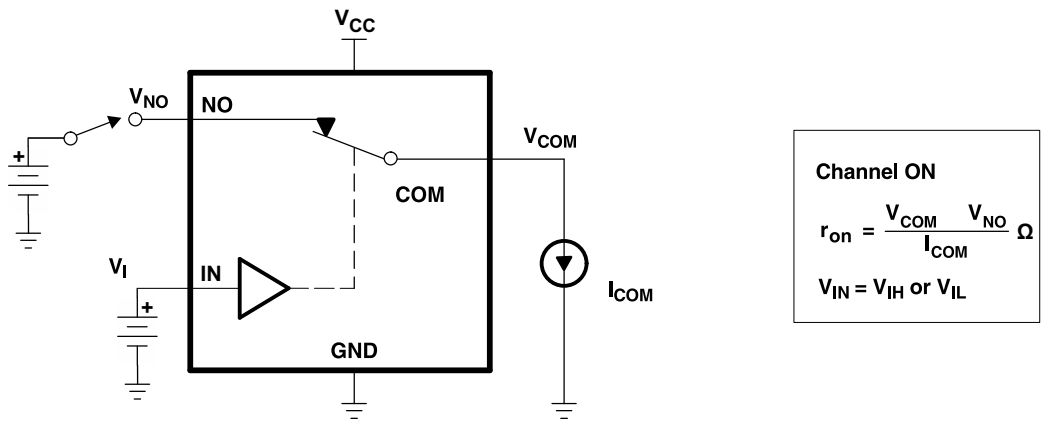


**Figure 7-1. ON-state Resistance ($r_{ON}$)**

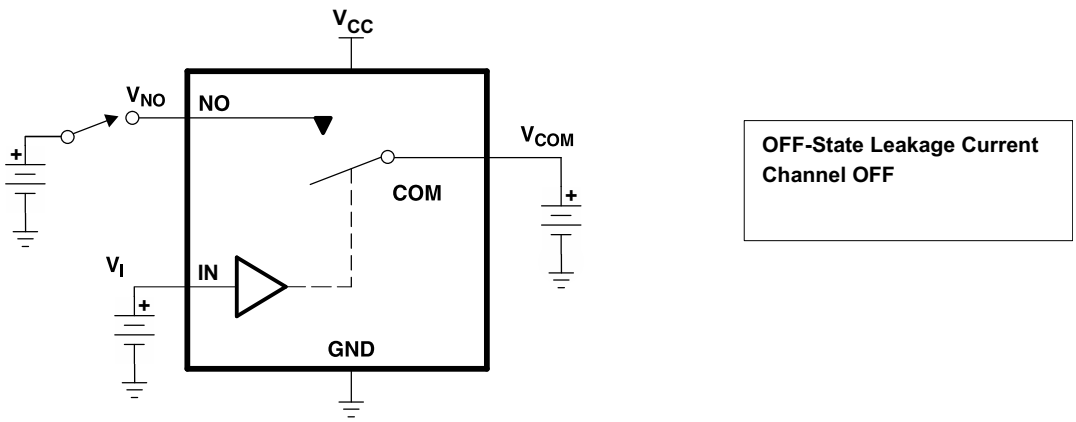


**Figure 7-2. OFF-State Leakage Current ($I_{COM(OFF)}$, $I_{NC(OFF)}$, $I_{COM(PWROFF)}$, $I_{NC(PWROFF)}$)**

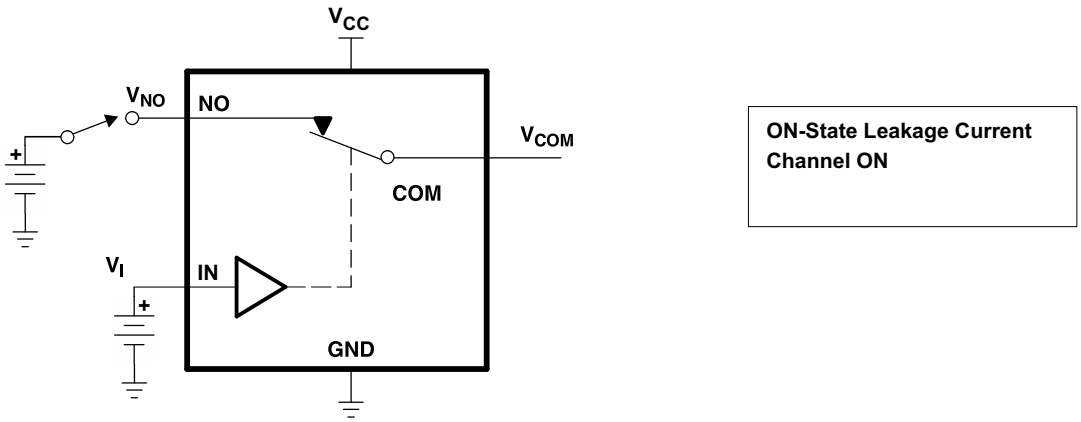


**Figure 7-3. ON-State Leakage Current ($I_{COM(ON)}$, $I_{NC(ON)}$)**

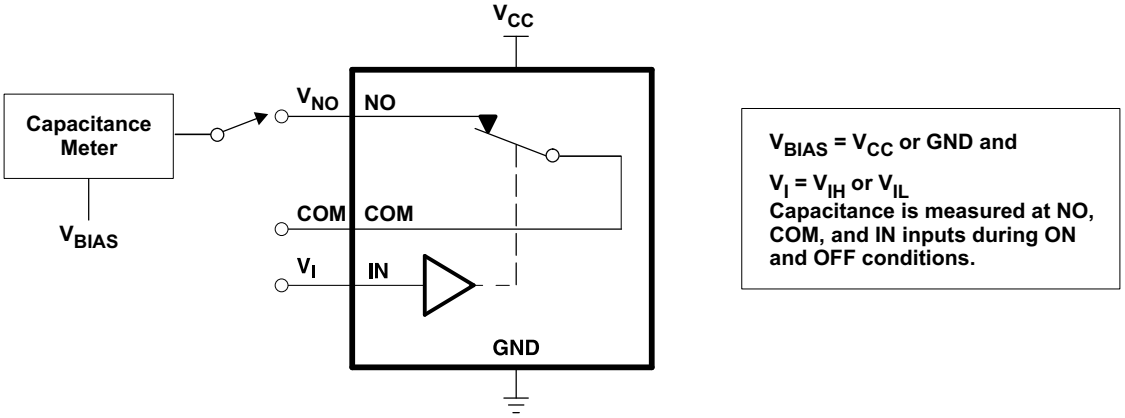


**Figure 7-4. Capacitance ($C_I$, $C_{COM(OFF)}$, $C_{COM(ON)}$, $C_{NC(OFF)}$, $C_{NC(ON)}$)**

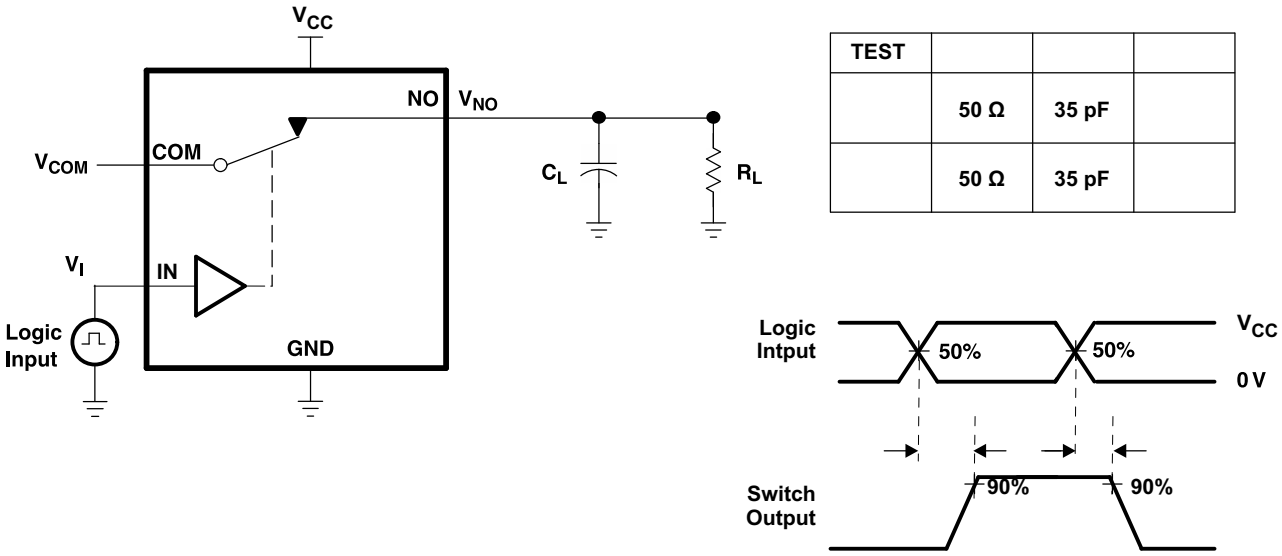


| TEST | | | |
|---|---|---|---|
| | 50 Ω | 35 pF | |
| | 50 Ω | 35 pF | |

A. All input pulses are supplied by generators having the following characteristics: PRR ≤ 10 MHz, $Z_O$ = 50 Ω, $t_r$ < 5 ns, $t_f$ < 5 ns.
B. $C_L$ includes probe and jig capacitance.

**Figure 7-5. Turn-On ($t_{ON}$) and Turn-Off Time ($t_{OFF}$)**

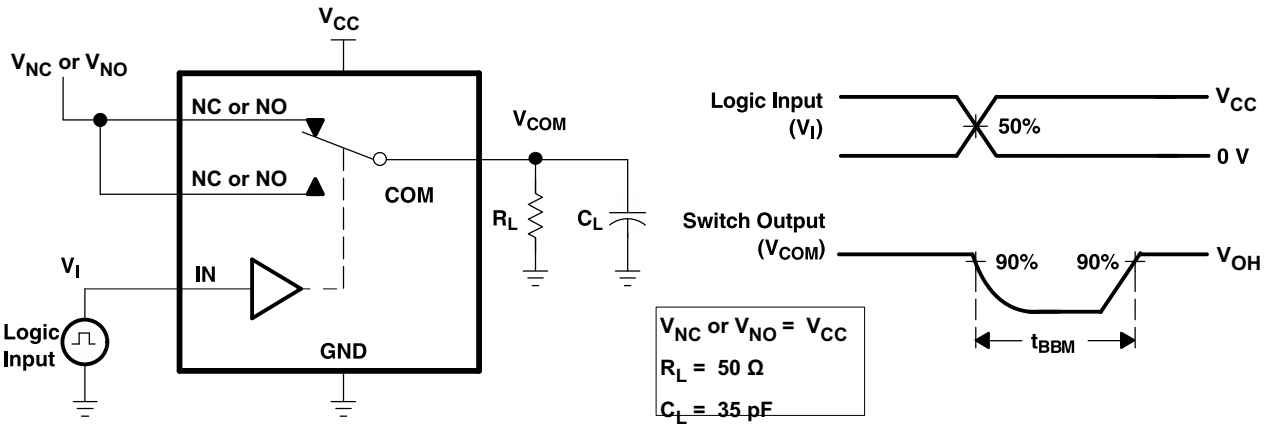


A. $C_L$ includes probe and jig capacitance.
B. All input pulses are supplied by generators having the following characteristics: PRR ≤ 10 MHz, $Z_O$ = 50 Ω, $t_r$ < 5 ns, $t_f$ < 5 ns.

**Figure 7-6. Break-Before-Make Time ($t_{BBM}$)**


Copyright © 2022 Texas Instruments Incorporated

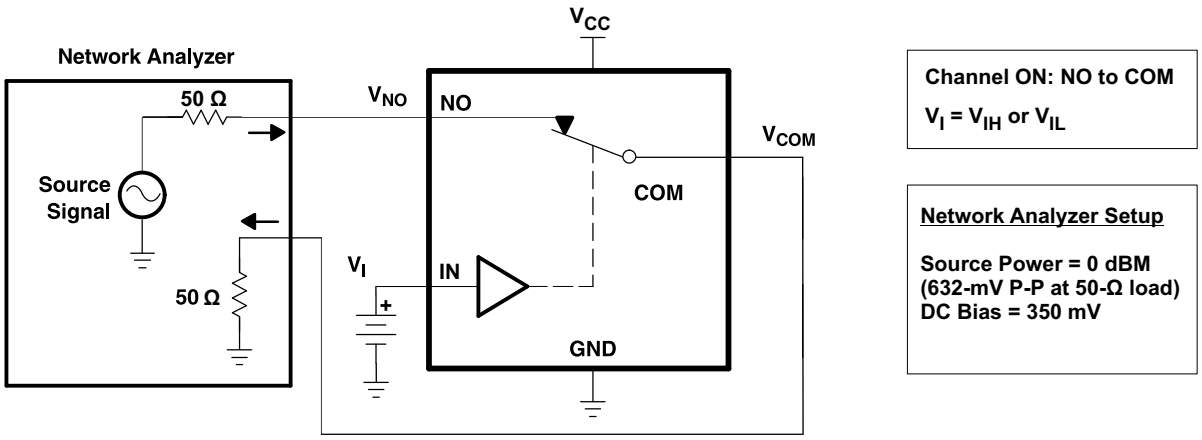


**Figure 7-7. Bandwidth (BW)**

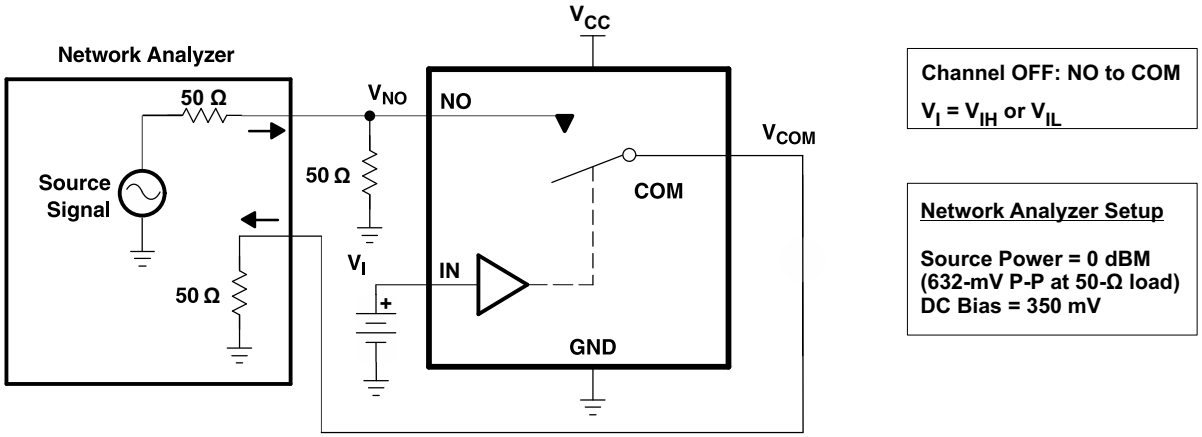


**Figure 7-8. OFF Isolation ($O_{ISO}$)**

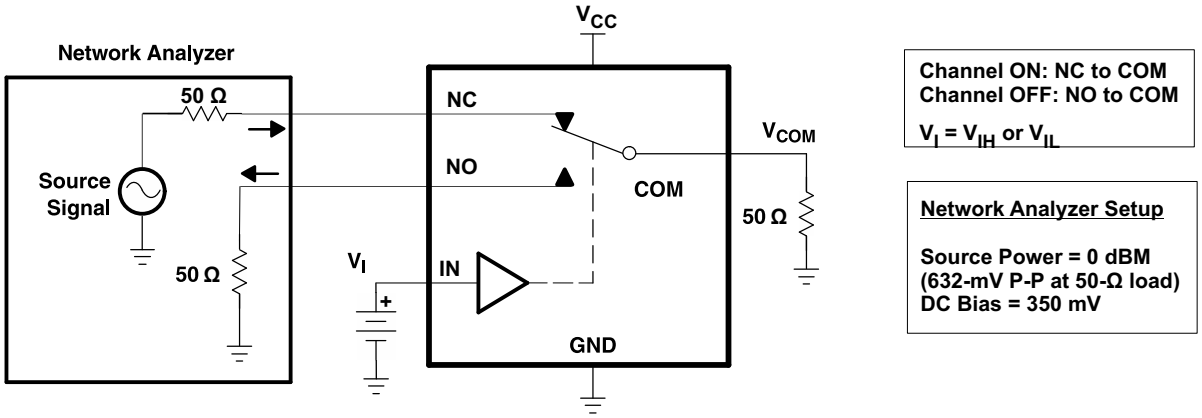


**Figure 7-9. Crosstalk ($X_{TALK}$)**

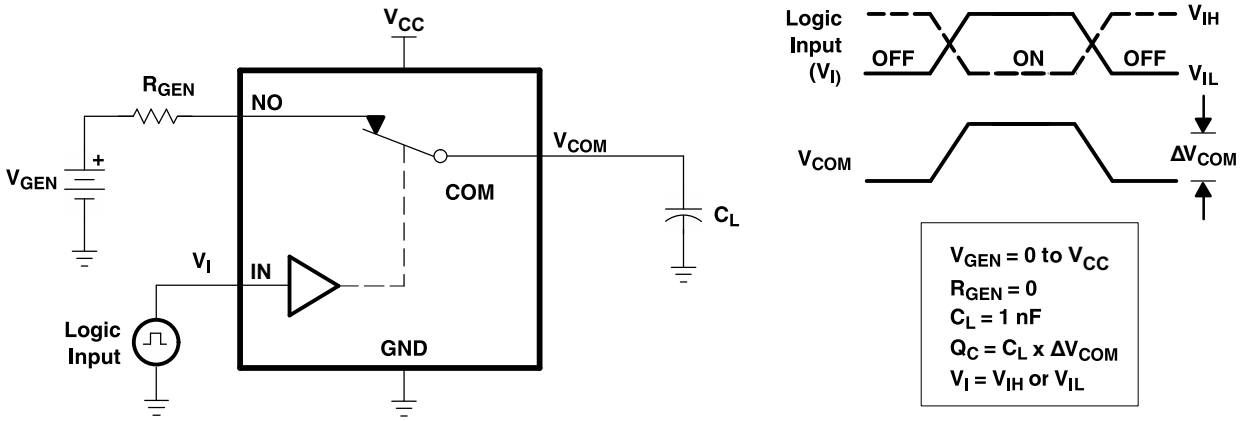


A. All input pulses are supplied by generators having the following characteristics: PRR ≤ 10 MHz, $Z_O$ = 50 Ω, $t_r$ < 5 ns, $t_f$ < 5 ns.
B. $C_L$ includes probe and jig capacitance.

**Figure 7-10. Charge Injection ($Q_C$)**

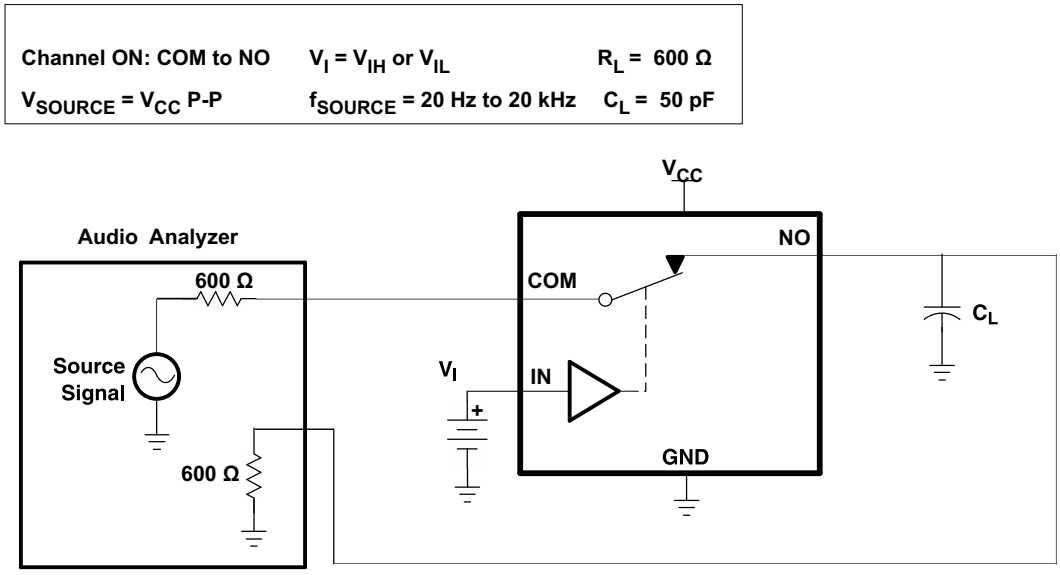


A. $C_L$ includes probe and jig capacitance.

**Figure 7-11. Total Harmonic Distortion (THD)**


Copyright © 2022 Texas Instruments Incorporated

# 8 Detailed Description

## 8.1 Overview

The TS3A27518E-Q1 is a bidirectional, 6-channel, 1:2 multiplexer-demultiplexer designed to operate from 1.65 V to 3.6 V. This device can handle both digital and analog signals, and can transmit signals up to $V_{CC}$ in either direction. The TS3A27518E-Q1 has two control pins, each controlling three 1:2 muxes at the same time, and an enable pin that puts all outputs in high-impedance mode. The control pins are compatible with 1.8-V logic thresholds and are backward compatible with 2.5-V and 3.3-V logic thresholds.

## 8.2 Functional Block Diagram

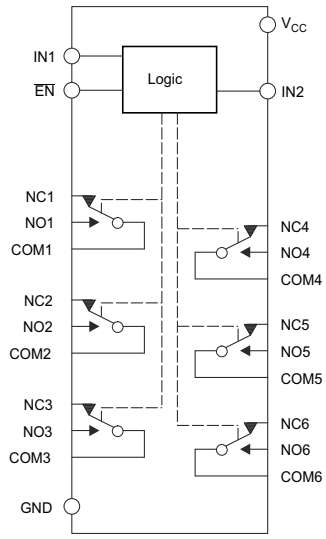


Copyright © 2016, Texas Instruments Incorporated

## 8.3 Feature Description

The isolation in power-down mode, $V_{CC}$ = 0 feature places all switch paths in high-impedance state (High-Z) when the supply voltage equals 0 V.

## 8.4 Device Functional Modes

The TS3A27518E-Q1 is a bidirectional device that has two sets of three single-pole double-throw switches. Two digital signals control the 6 channels of the switch; one digital control for each set of three single-pole, double-throw switches. Digital input pin IN1 controls switches 1, 2, and 3, while pin IN2 controls switches 4, 5, and 6.

The TS3A27518E-Q1 has an $\overline{EN}$ pin that when set to logic high, it places all channels into a high-impedance or HIGH-Z state. Table 8-1 lists the functions of TS3A27518E-Q1.

**Table 8-1. Function Table**

| $\overline{EN}$ | IN1 | IN2 | NC1/2/3 TO COM1/2/3, COM1/2/3 TO NC1/2/3 | NC4/5/6 TO COM4/5/6, COM4/5/6 TO NC4/5/6 | NO1/2/3 TO COM1/2/3, COM1/2/3 TO NO1/2/3 | NO4/5/6 TO COM4/5/6, COM4/5/6 TO NO4/5/6 |
|---|---|---|---|---|---|---|
| H | X | X | OFF | OFF | OFF | OFF |
| L | L | L | ON | ON | OFF | OFF |
| L | H | L | OFF | ON | ON | OFF |
| L | L | H | ON | OFF | OFF | ON |
| L | H | H | OFF | OFF | ON | ON |

# 9 Application and Implementation

**Note**

Information in the following applications sections is not part of the TI component specification, and TI does not warrant its accuracy or completeness. TI's customers are responsible for determining suitability of components for their purposes, as well as validating and testing their design implementation to confirm system functionality.

## 9.1 Application Information

The switches are bidirectional, so the NO, NC, and COM pins can be used as either inputs or outputs.

## 9.2 Typical Application

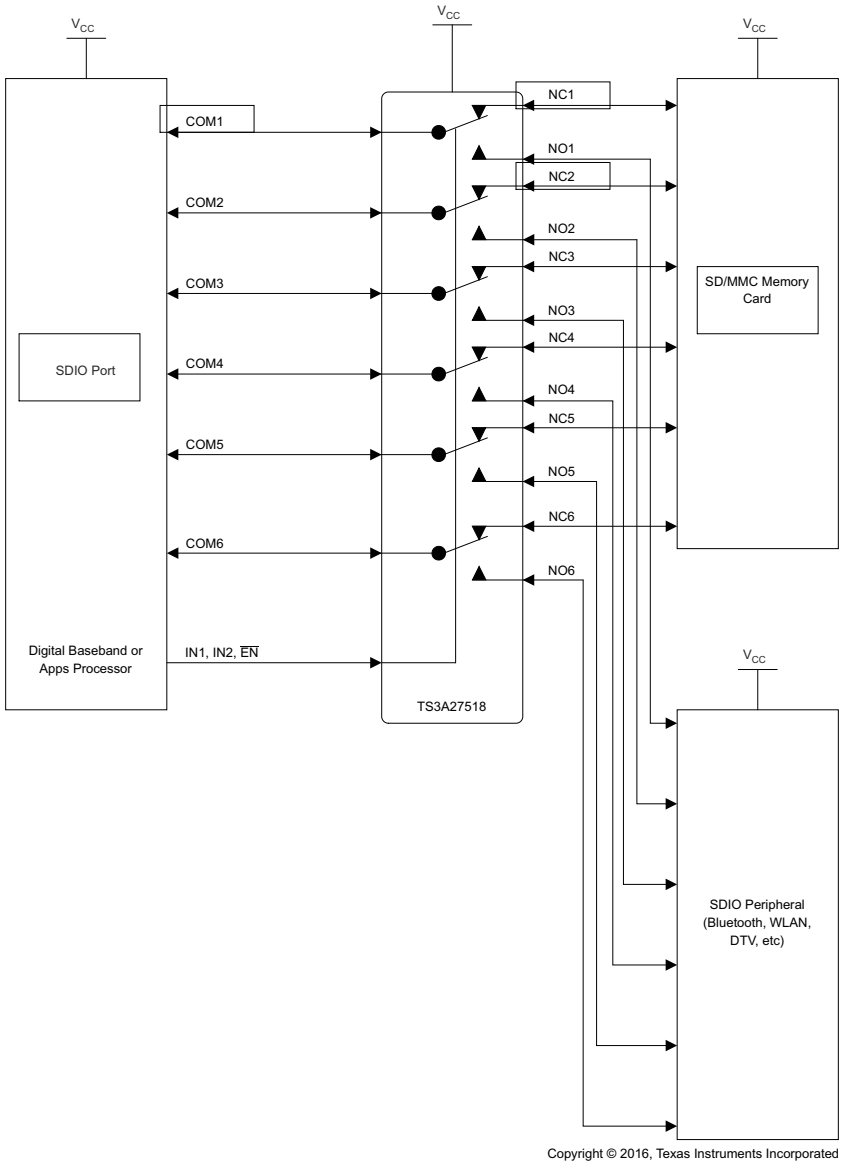


**Figure 9-1. SDIO Expander Application Block Diagram**


Copyright © 2022 Texas Instruments Incorporated

### 9.2.1 Design Requirement

Ensure that all of the signals passing through the switch are within the recommended operating ranges to ensure proper performance. For more information, see *Section 6.3*.

### 9.2.2 Detailed Design Procedure

The TS3A27518E-Q1 can operate properly without any external components. However, TI recommends connecting unused pins to the ground through a 50-Ω resistor to prevent signal reflections back into the device. TI also recommends that the digital control pins (INX) be pulled up to $V_{CC}$ or down to GND to avoid undesired switch positions that could result from the floating pin.

For the RTW package connect the thermal pad to ground.

### 9.2.3 Application Curves

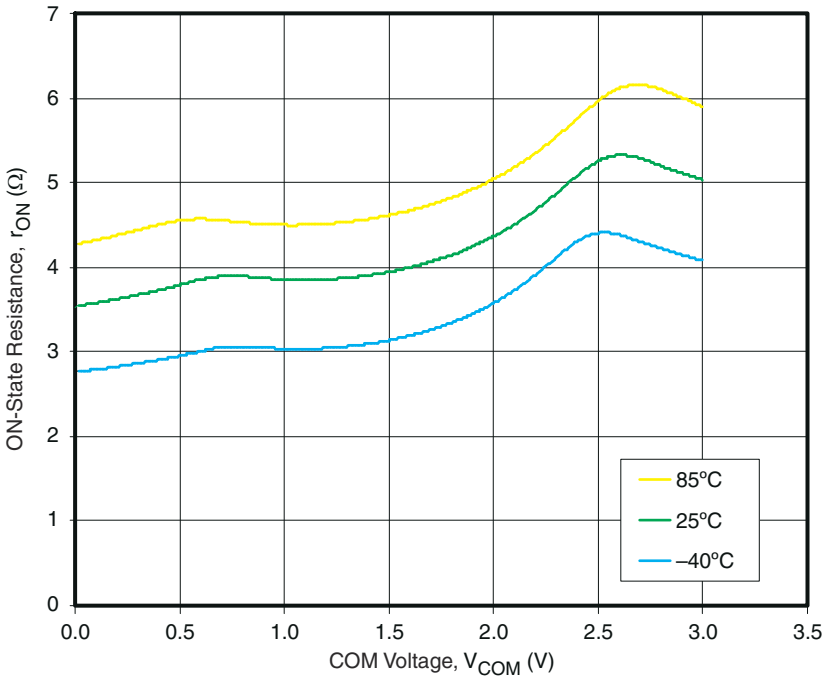


**Figure 9-2. ON-State Resistance vs COM Voltage ($V_{CC}$ = 3 V)**

## 10 Power Supply Recommendations

TI recommends proper power-supply sequencing for all CMOS devices. Do not exceed the absolute maximum ratings, because stresses beyond the listed ratings can cause permanent damage to the device. Always sequence $V_{CC}$ on first, followed by NO, NC, or COM. Although it is not required, power-supply bypassing improves noise margin and prevents switching noise propagation from the $V_{CC}$ supply to other components. A 0.1-µF capacitor is adequate for most applications, if connected from $V_{CC}$ to GND.

Copyright © 2022 Texas Instruments Incorporated

# 11 Layout

## 11.1 Layout Guidelines

To ensure reliability of the device, TI recommends following these common printed-circuit board layout guidelines:

- Bypass capacitors should be used on power supplies, and should be placed as close as possible to the $V_{CC}$ pin
- Short trace-lengths should be used to avoid excessive loading
- For the RTW package, connect the thermal pad to ground

## 11.2 Layout Example

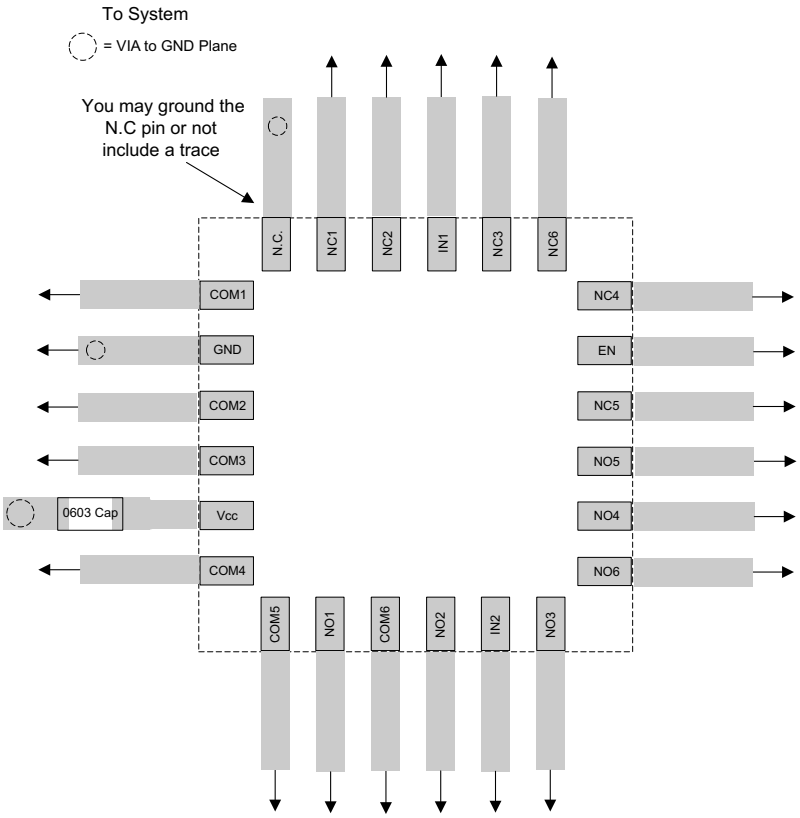


**Figure 11-1. WQFN Layout Recommendation**


Copyright © 2022 Texas Instruments Incorporated

# 12 Device and Documentation Support

## 12.1 Documentation Support

### 12.1.1 Related Documentation

For related documentation, see the following:

- Texas Instruments, *TS3A27518E-Q1 Functional Safety FIT Rate, FMD and Pin FMA* report

## 12.2 Receiving Notification of Documentation Updates

To receive notification of documentation updates, navigate to the device product folder on ti.com. Click on *Subscribe to updates* to register and receive a weekly digest of any product information that has changed. For change details, review the revision history included in any revised document.

## 12.3 Support Resources

TI E2E™ support forums are an engineer's go-to source for fast, verified answers and design help — straight from the experts. Search existing answers or ask your own question to get the quick design help you need.

Linked content is provided "AS IS" by the respective contributors. They do not constitute TI specifications and do not necessarily reflect TI's views; see TI's Terms of Use.

## 12.4 Trademarks

TI E2E™ is a trademark of Texas Instruments.
All trademarks are the property of their respective owners.

## 12.5 Electrostatic Discharge Caution

This integrated circuit can be damaged by ESD. Texas Instruments recommends that all integrated circuits be handled with appropriate precautions. Failure to observe proper handling and installation procedures can cause damage.

ESD damage can range from subtle performance degradation to complete device failure. Precision integrated circuits may be more susceptible to damage because very small parametric changes could cause the device not to meet its published specifications.

## 12.6 Glossary

TI Glossary — This glossary lists and explains terms, acronyms, and definitions.

# 13 Mechanical, Packaging, and Orderable Information

The following pages include mechanical, packaging, and orderable information. This information is the most current data available for the designated devices. This data is subject to change without notice and revision of this document. For browser-based versions of this data sheet, refer to the left-hand navigation.

## PACKAGING INFORMATION

| Orderable part number | Status (1) | Material type (2) | Package \| Pins | Package qty \| Carrier | RoHS (3) | Lead finish/ Ball material (4) | MSL rating/ Peak reflow (5) | Op temp (°C) | Part marking (6) |
|---|---|---|---|---|---|---|---|---|---|
| TS3A27518EIPWRQ1 | Active | Production | TSSOP (PW) \| 24 | 2000 \| LARGE T&R | Yes | NIPDAU | Level-3-260C-168 HR | -40 to 85 | YL518EQ1 |
| TS3A27518EIPWRQ1.B | Active | Production | TSSOP (PW) \| 24 | 2000 \| LARGE T&R | Yes | NIPDAU | Level-3-260C-168 HR | -40 to 85 | YL518EQ1 |
| TS3A27518EIRTWRQ1 | Active | Production | WQFN (RTW) \| 24 | 3000 \| LARGE T&R | Yes | NIPDAU | Level-3-260C-168 HR | -40 to 85 | 27518EI |
| TS3A27518EIRTWRQ1.B | Active | Production | WQFN (RTW) \| 24 | 3000 \| LARGE T&R | Yes | NIPDAU | Level-3-260C-168 HR | -40 to 85 | 27518EI |
| TS3A27518ETRTWRQ1 | Active | Production | WQFN (RTW) \| 24 | 3000 \| LARGE T&R | Yes | NIPDAU | Level-3-260C-168 HR | -40 to 105 | 27518ET |
| TS3A27518ETRTWRQ1.B | Active | Production | WQFN (RTW) \| 24 | 3000 \| LARGE T&R | Yes | NIPDAU | Level-3-260C-168 HR | -40 to 105 | 27518ET |

(1) **Status:** For more details on status, see our product life cycle.

(2) **Material type:** When designated, preproduction parts are prototypes/experimental devices, and are not yet approved or released for full production. Testing and final process, including without limitation quality assurance, reliability performance testing, and/or process qualification, may not yet be complete, and this item is subject to further changes or possible discontinuation. If available for ordering, purchases will be subject to an additional waiver at checkout, and are intended for early internal evaluation purposes only. These items are sold without warranties of any kind.

(3) **RoHS values:** Yes, No, RoHS Exempt. See the TI RoHS Statement for additional information and value definition.

(4) **Lead finish/Ball material:** Parts may have multiple material finish options. Finish options are separated by a vertical ruled line. Lead finish/Ball material values may wrap to two lines if the finish value exceeds the maximum column width.

(5) **MSL rating/Peak reflow:** The moisture sensitivity level ratings and peak solder (reflow) temperatures. In the event that a part has multiple moisture sensitivity ratings, only the lowest level per JEDEC standards is shown. Refer to the shipping label for the actual reflow temperature that will be used to mount the part to the printed circuit board.

(6) **Part marking:** There may be an additional marking, which relates to the logo, the lot trace code information, or the environmental category of the part.

Multiple part markings will be inside parentheses. Only one part marking contained in parentheses and separated by a "~" will appear on a part. If a line is indented then it is a continuation of the previous line and the two combined represent the entire part marking for that device.

**Important Information and Disclaimer:**The information provided on this page represents TI's knowledge and belief as of the date that it is provided. TI bases its knowledge and belief on information provided by third parties, and makes no representation or warranty as to the accuracy of such information. Efforts are underway to better integrate information from third parties. TI has taken and continues to take reasonable steps to provide representative and accurate information but may not have conducted destructive testing or chemical analysis on incoming materials and chemicals. TI and TI suppliers consider certain information to be proprietary, and thus CAS numbers and other limited information may not be available for release.

In no event shall TI's liability arising out of such information exceed the total purchase price of the TI part(s) at issue in this document sold by TI to Customer on an annual basis.

**OTHER QUALIFIED VERSIONS OF TS3A27518E-Q1 :**

- Catalog : TS3A27518E

NOTE: Qualified Version Definitions:

- Catalog - TI's standard catalog product

## TAPE AND REEL INFORMATION

**REEL DIMENSIONS**

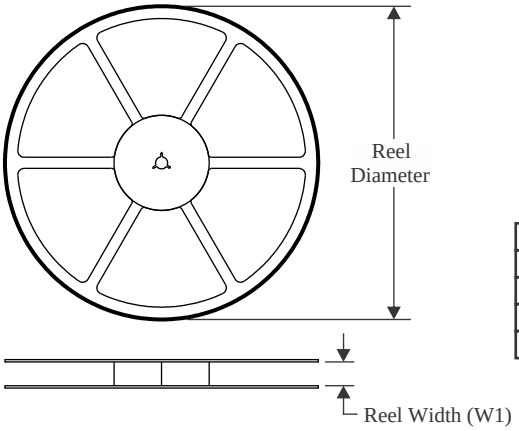


**TAPE DIMENSIONS**

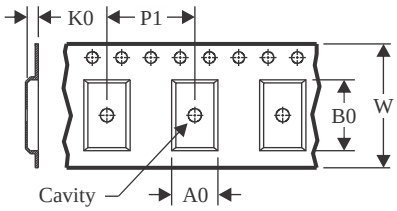


| | |
|---|---|
| A0 | Dimension designed to accommodate the component width |
| B0 | Dimension designed to accommodate the component length |
| K0 | Dimension designed to accommodate the component thickness |
| W | Overall width of the carrier tape |
| P1 | Pitch between successive cavity centers |

**QUADRANT ASSIGNMENTS FOR PIN 1 ORIENTATION IN TAPE**

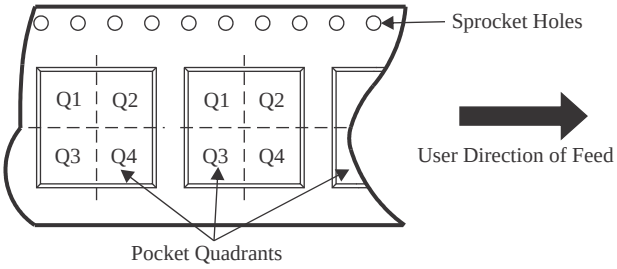


*All dimensions are nominal

| Device | Package Type | Package Drawing | Pins | SPQ | Reel Diameter (mm) | Reel Width W1 (mm) | A0 (mm) | B0 (mm) | K0 (mm) | P1 (mm) | W (mm) | Pin1 Quadrant |
|---|---|---|---|---|---|---|---|---|---|---|---|---|
| TS3A27518EIPWRQ1 | TSSOP | PW | 24 | 2000 | 330.0 | 16.4 | 6.95 | 8.3 | 1.6 | 8.0 | 16.0 | Q1 |
| TS3A27518EIRTWRQ1 | WQFN | RTW | 24 | 3000 | 330.0 | 12.4 | 4.25 | 4.25 | 1.15 | 8.0 | 12.0 | Q2 |
| TS3A27518ETRTWRQ1 | WQFN | RTW | 24 | 3000 | 330.0 | 12.4 | 4.25 | 4.25 | 1.15 | 8.0 | 12.0 | Q2 |

TAPE AND REEL BOX DIMENSIONS

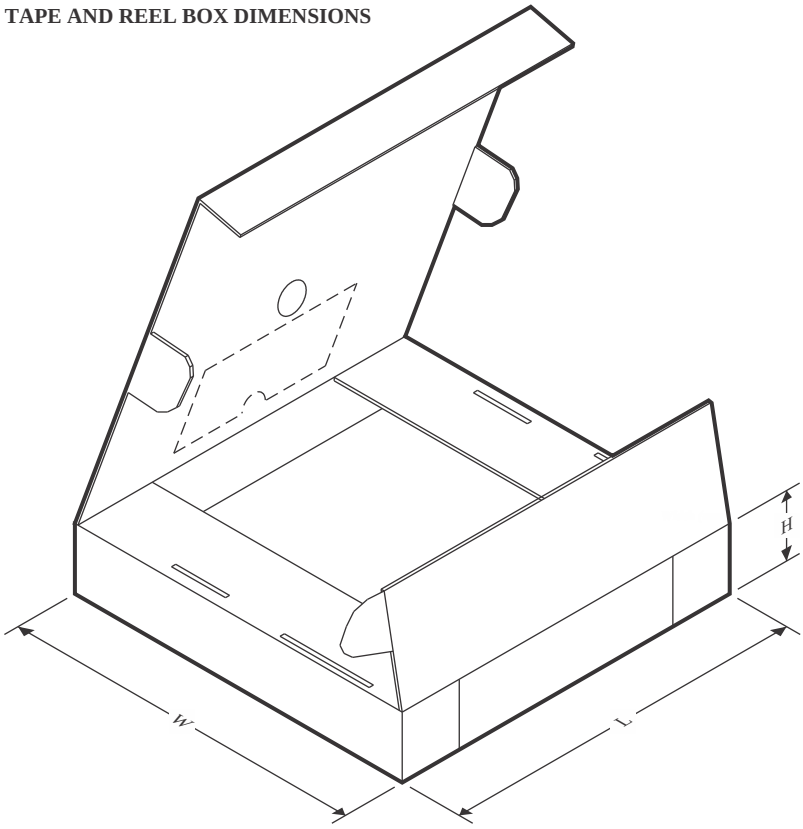


*All dimensions are nominal

| Device | Package Type | Package Drawing | Pins | SPQ | Length (mm) | Width (mm) | Height (mm) |
|---|---|---|---|---|---|---|---|
| TS3A27518EIPWRQ1 | TSSOP | PW | 24 | 2000 | 356.0 | 356.0 | 35.0 |
| TS3A27518EIRTWRQ1 | WQFN | RTW | 24 | 3000 | 356.0 | 356.0 | 35.0 |
| TS3A27518ETRTWRQ1 | WQFN | RTW | 24 | 3000 | 356.0 | 356.0 | 35.0 |

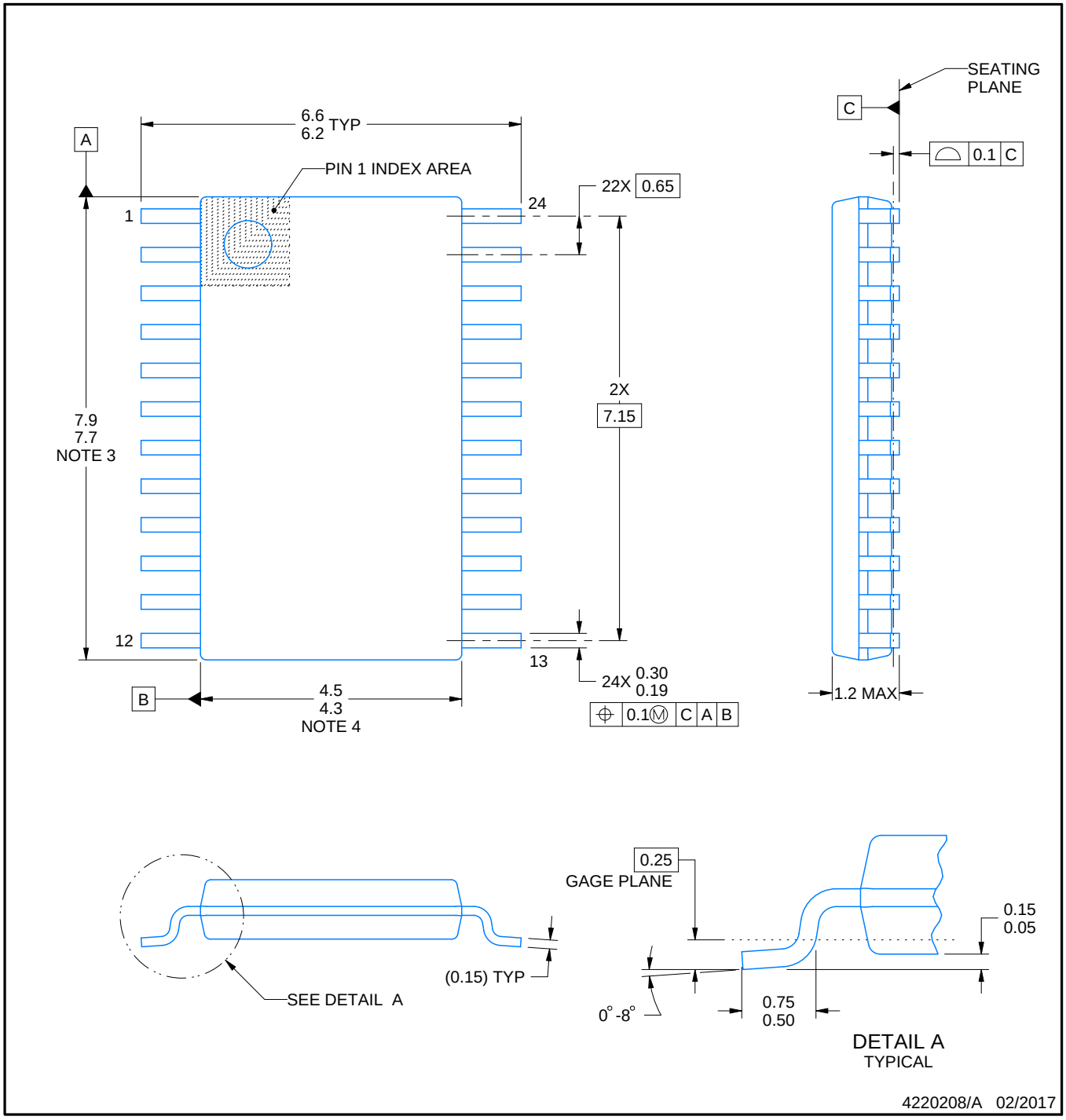


NOTES:

1. All linear dimensions are in millimeters. Any dimensions in parenthesis are for reference only. Dimensioning and tolerancing per ASME Y14.5M.
2. This drawing is subject to change without notice.
3. This dimension does not include mold flash, protrusions, or gate burrs. Mold flash, protrusions, or gate burrs shall not exceed 0.15 mm per side.
4. This dimension does not include interlead flash. Interlead flash shall not exceed 0.25 mm per side.
5. Reference JEDEC registration MO-153.

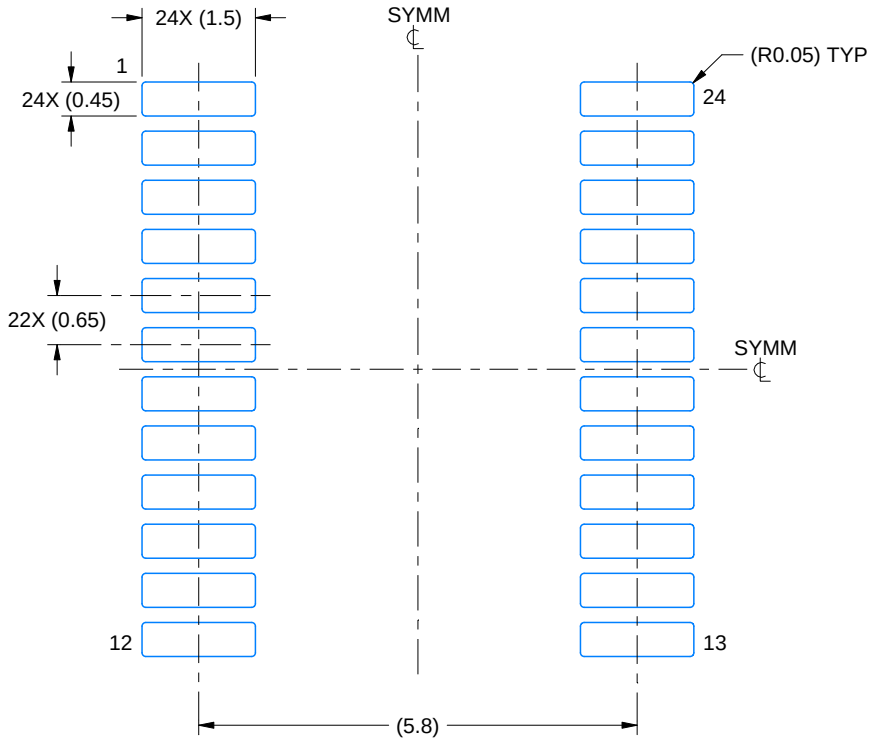


LAND PATTERN EXAMPLE
EXPOSED METAL SHOWN
SCALE: 10X

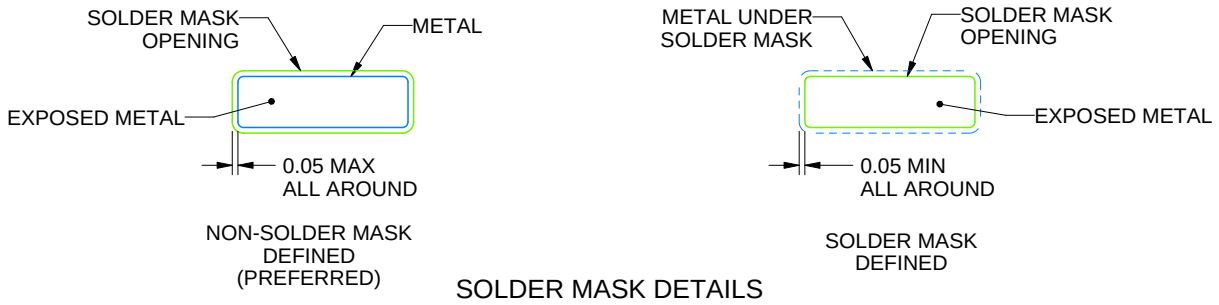


SOLDER MASK DETAILS

4220208/A 02/2017

NOTES: (continued)

6. Publication IPC-7351 may have alternate designs.
7. Solder mask tolerances between and around signal pads can vary based on board fabrication site.

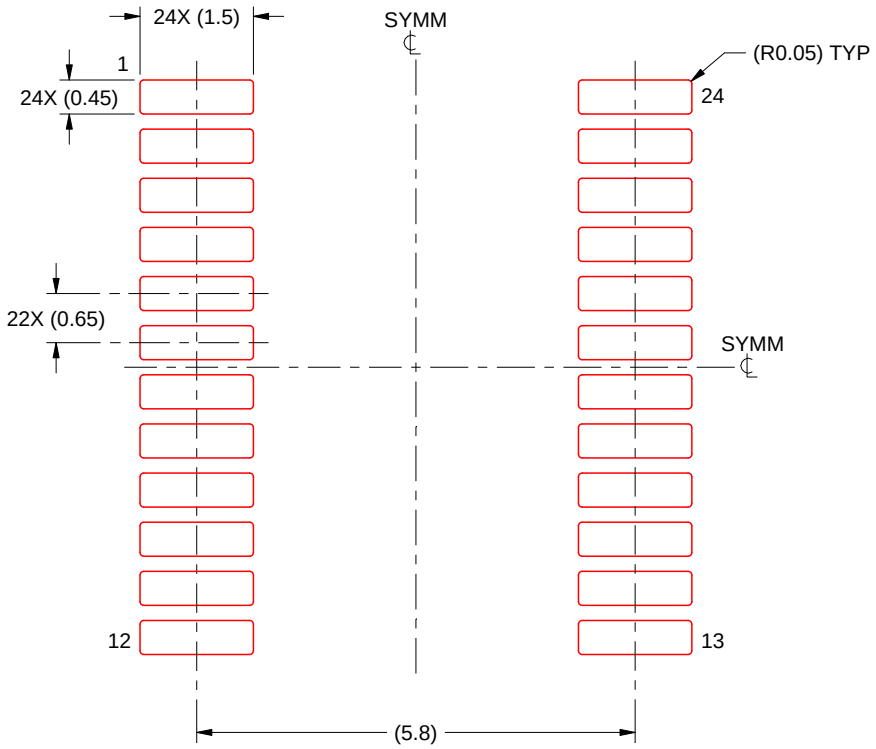


SOLDER PASTE EXAMPLE
BASED ON 0.125 mm THICK STENCIL
SCALE: 10X

4220208/A 02/2017

NOTES: (continued)

8. Laser cutting apertures with trapezoidal walls and rounded corners may offer better paste release. IPC-7525 may have alternate design recommendations.
9. Board assembly site may have different recommendations for stencil design.

# GENERIC PACKAGE VIEW

## RTW 24

## WQFN - 0.8 mm max height

**4 x 4, 0.5 mm pitch**

PLASTIC QUAD FLATPACK - NO LEAD

This image is a representation of the package family, actual package may vary.
Refer to the product data sheet for package details.

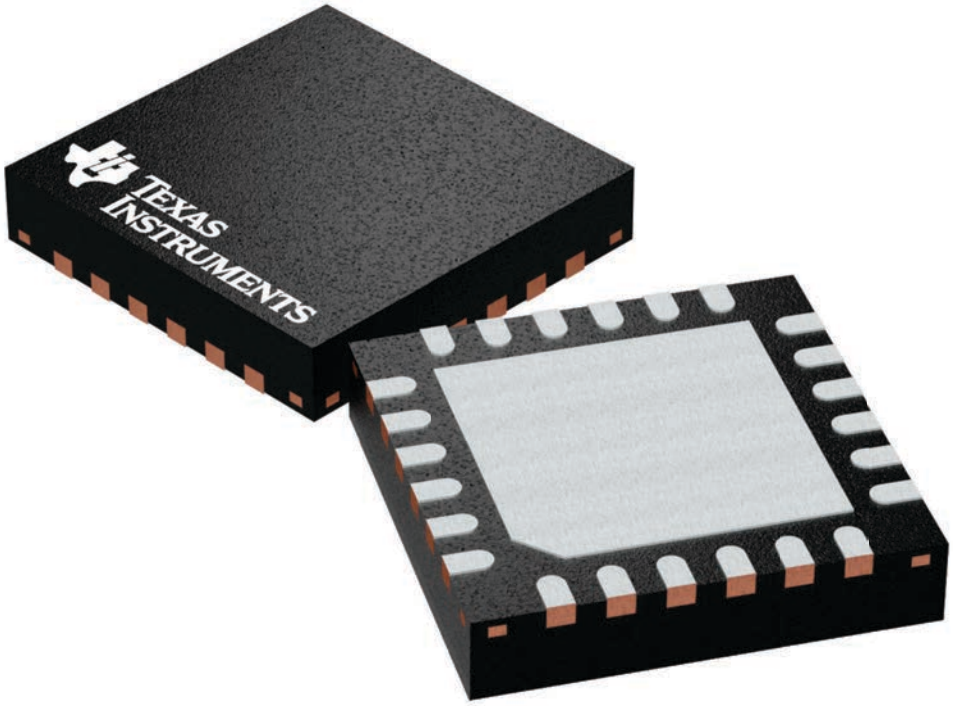


4224801/A

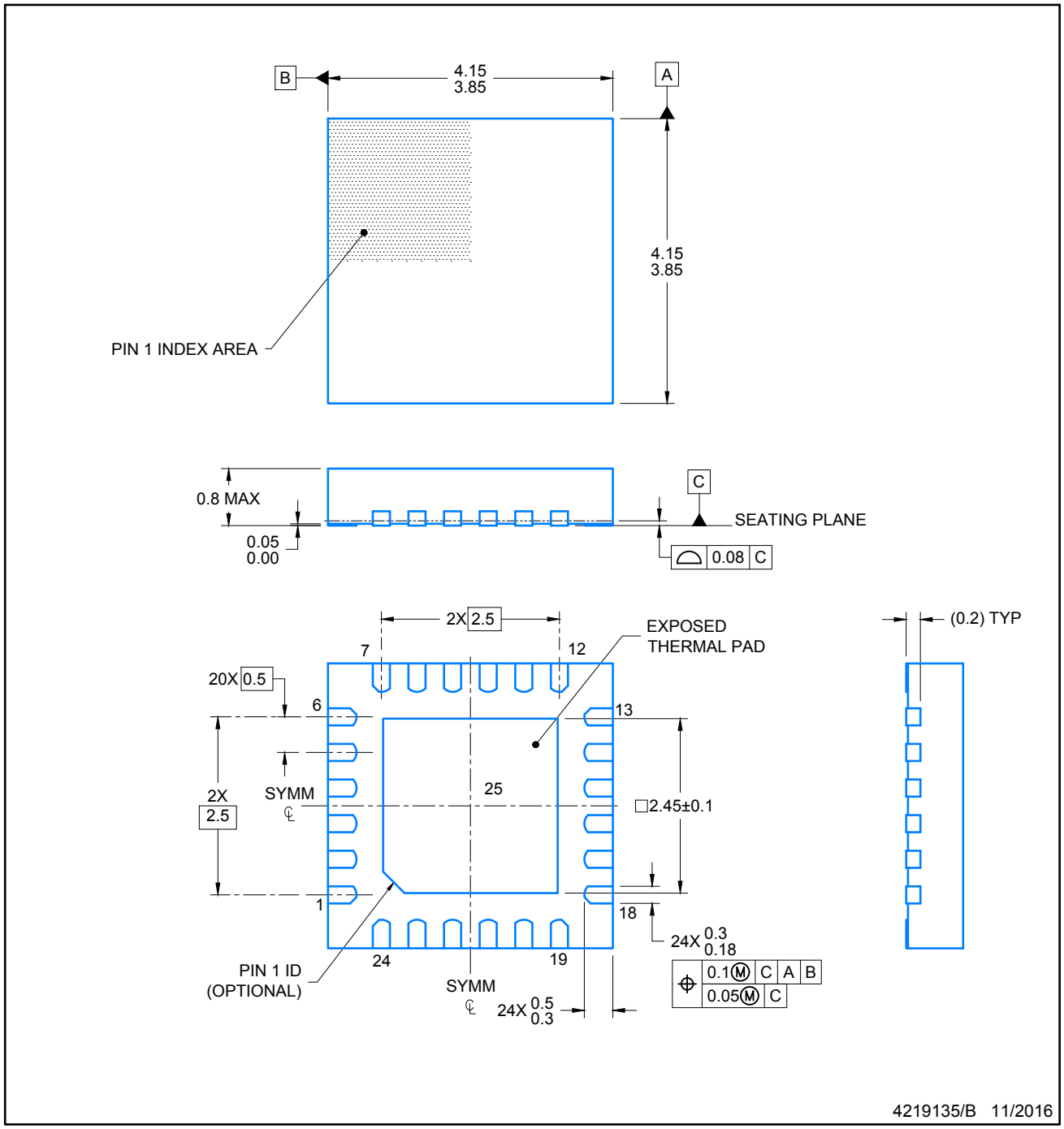


NOTES:

1. All linear dimensions are in millimeters. Any dimensions in parenthesis are for reference only. Dimensioning and tolerancing per ASME Y14.5M.
2. This drawing is subject to change without notice.

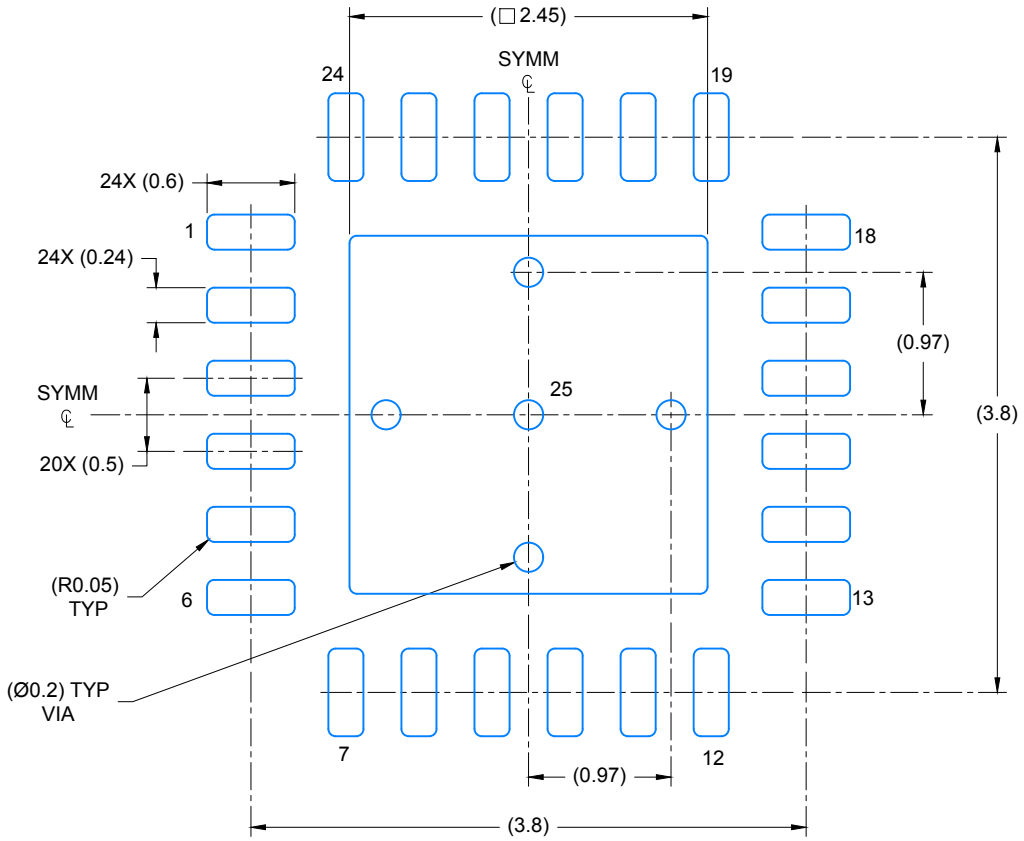


LAND PATTERN EXAMPLE

SCALE: 20X

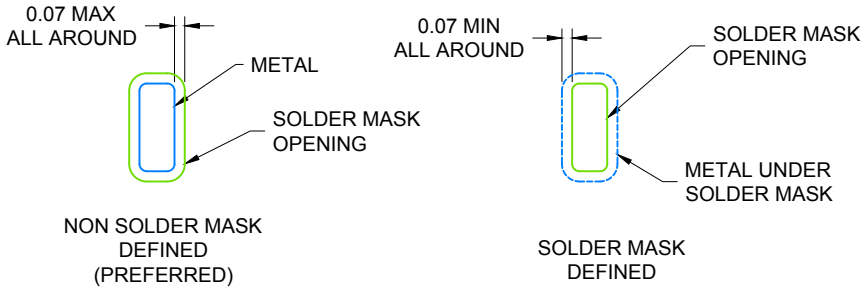


SOLDER MASK DETAILS

4219135/B 11/2016

NOTES: (continued)

3. For more information, see Texas Instruments literature number SLUA271 (www.ti.com/lit/slua271).

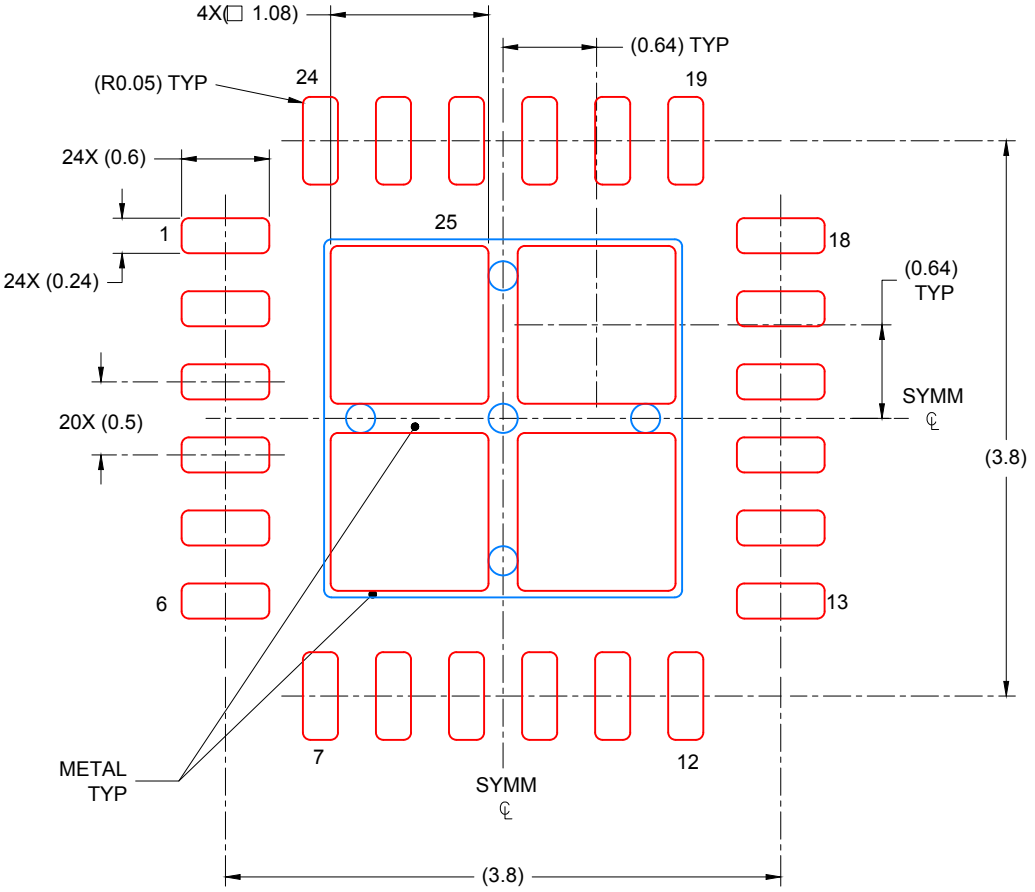


SOLDER PASTE EXAMPLE
BASED ON 0.125 mm THICK STENCIL

EXPOSED PAD 25:
78% PRINTED COVERAGE BY AREA UNDER PACKAGE
SCALE: 20X

4219135/B 11/2016

NOTES: (continued)

4. Laser cutting apertures with trapezoidal walls and rounded corners may offer better paste release. IPC-7525 may have alternate design recommendations.

# IMPORTANT NOTICE AND DISCLAIMER

TI PROVIDES TECHNICAL AND RELIABILITY DATA (INCLUDING DATA SHEETS), DESIGN RESOURCES (INCLUDING REFERENCE DESIGNS), APPLICATION OR OTHER DESIGN ADVICE, WEB TOOLS, SAFETY INFORMATION, AND OTHER RESOURCES “AS IS” AND WITH ALL FAULTS, AND DISCLAIMS ALL WARRANTIES, EXPRESS AND IMPLIED, INCLUDING WITHOUT LIMITATION ANY IMPLIED WARRANTIES OF MERCHANTABILITY, FITNESS FOR A PARTICULAR PURPOSE OR NON-INFRINGEMENT OF THIRD PARTY INTELLECTUAL PROPERTY RIGHTS.

These resources are intended for skilled developers designing with TI products. You are solely responsible for (1) selecting the appropriate TI products for your application, (2) designing, validating and testing your application, and (3) ensuring your application meets applicable standards, and any other safety, security, regulatory or other requirements.

These resources are subject to change without notice. TI grants you permission to use these resources only for development of an application that uses the TI products described in the resource. Other reproduction and display of these resources is prohibited. No license is granted to any other TI intellectual property right or to any third party intellectual property right. TI disclaims responsibility for, and you will fully indemnify TI and its representatives against, any claims, damages, costs, losses, and liabilities arising out of your use of these resources.

TI’s products are provided subject to TI’s Terms of Sale or other applicable terms available either on ti.com or provided in conjunction with such TI products. TI’s provision of these resources does not expand or otherwise alter TI’s applicable warranties or warranty disclaimers for TI products.

TI objects to and rejects any additional or different terms you may have proposed.

Mailing Address: Texas Instruments, Post Office Box 655303, Dallas, Texas 75265
Copyright © 2025, Texas Instruments Incorporated