SN54LVTH16240, SN74LVTH16240
3.3-V ABT 16-BIT BUFFERS/DRIVERS WITH 3-STATE OUTPUTS

SCBS684D – MARCH 1997 – REVISED DECEMBER 2006

FEATURES

- **Members of the Texas Instruments Widebus™ Family**
- **State-of-the-Art Advanced BiCMOS Technology (ABT) Design for 3.3-V Operation and Low Static-Power Dissipation**
- **Support Mixed-Mode Signal Operation (5-V Input and Output Voltages With 3.3-V V_{CC})**
- **Support Unregulated Battery Operation Down to 2.7 V**
- **Typical V_{OLP} (Output Ground Bounce) <0.8 V at V_{CC} = 3.3 V, T_A = 25°C**
- **I_{off} and Power-Up 3-State Support Hot Insertion**
- **Bus Hold on Data Inputs Eliminates the Need for External Pullup/Pulldown Resistors**
- **Distributed V_{CC} and GND Pin Configuration Minimizes High-Speed Switching Noise**
- **Flow-Through Architecture Optimizes PCB Layout**
- **Latch-Up Performance Exceeds 500 mA Per JESD 17**
- **ESD Protection Exceeds 2000 V Per MIL-STD-883, Method 3015; Exceeds 200 V Using Machine Model (C = 200 pF, R = 0)**
- **Package Options Include Plastic Shrink Small-Outline (DL) and Thin Shrink Small-Outline (DGG) Packages and 380-mil Fine-Pitch Ceramic Flat (WD) Package Using 25-mil Center-to-Center Spacings**

SN54LVTH16240 . . . WD PACKAGE
SN74LVTH16240 . . . DGG OR DL PACKAGE
(TOP VIEW)

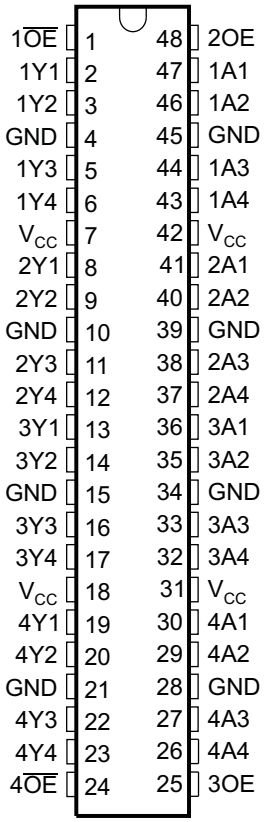

DESCRIPTION/ORDERING INFORMATION

These 16-bit buffers/drivers are designed specifically for low-voltage (3.3-V) V_{CC} operation, but with the capability to provide a TTL interface to a 5-V system environment.

The 'LVTH16240 devices are designed specifically to improve both the performance and density of 3-state memory address drivers, clock drivers, and bus-oriented receivers and transmitters.

ORDERING INFORMATION

T_A	PACKAGE(1)		ORDERABLE PART NUMBER	TOP-SIDE MARKING
–40°C to 85°C	SSOP – DL	Reel of 1000	SN74LVTH16240DLR	LVTH16240
			SN74LVTH16240DLRG4	
		Tube of 25	SN74LVTH16240DL	
			SN74LVTH16240DLG4	
	TSSOP – DGG	Reel of 2000	74LVTH16240DGGRE4	LVTH16240
			SN74LVTH16240DGGR	

(1) Package drawings, standard packing quantities, thermal data, symbolization, and PCB design guidelines are available at www.ti.com/sc/package.

Please be aware that an important notice concerning availability, standard warranty, and use in critical applications of Texas Instruments semiconductor products and disclaimers thereto appears at the end of this data sheet.

Widebus is a trademark of Texas Instruments.

PRODUCTION DATA information is current as of publication date. Products conform to specifications per the terms of the Texas Instruments standard warranty. Production processing does not necessarily include testing of all parameters.

Copyright © 1997–2006, Texas Instruments Incorporated

DESCRIPTION/ORDERING INFORMATION (CONTINUED)

The devices can be used as four 4-bit buffers, two 8-bit buffers, or one 16-bit buffer. The devices provide inverting outputs and symmetrical active-low output-enable ($\overline{OE}$) inputs.

When V_{CC} is between 0 and 1.5 V, the devices are in the high-impedance state during power up or power down. However, to ensure the high-impedance state above 1.5 V, $\overline{OE}$ should be tied to V_{CC} through a pullup resistor; the minimum value of the resistor is determined by the current-sinking capability of the driver.

Active bus-hold circuitry is provided to hold unused or floating data inputs at a valid logic level.

These devices are fully specified for hot-insertion applications using I_{off} and power-up 3-state. The I_{off} circuitry disables the outputs, preventing damaging current backflow through the devices when they are powered down. The power-up 3-state circuitry places the outputs in the high-impedance state during power up and power down, which prevents driver conflict.

The SN54LVTH16240 is characterized for operation over the full military temperature range of –55°C to 125°C. The SN74LVTH16240 is characterized for operation from –40°C to 85°C.

FUNCTION TABLE
(each 4-bit buffer)

INPUTS		OUTPUTS
$\overline{OE}$	A	Y
L	H	L
L	L	H
H	X	Z

LOGIC SYMBOL[(1)]

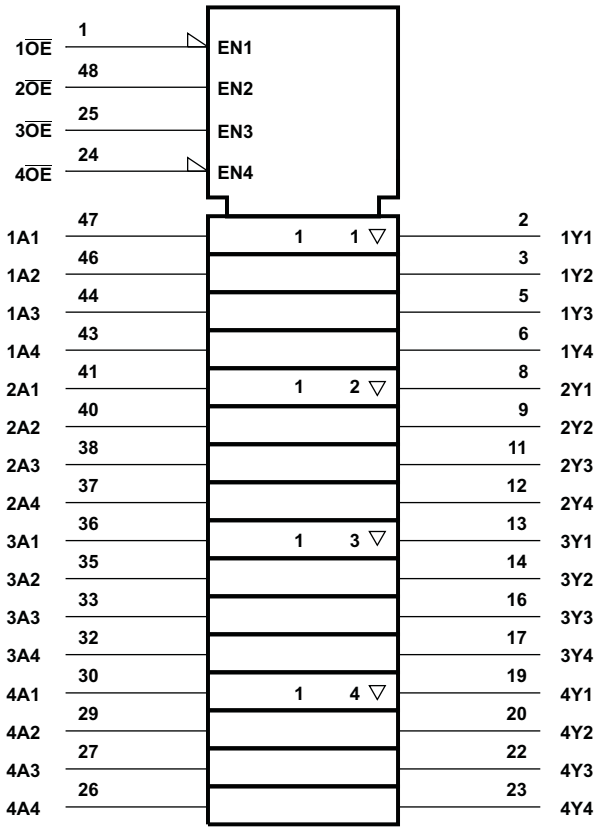

[(1)]This symbol is in accordance with ANSI/IEEE Std 91-1984 and IEC Publication 617-12.

LOGIC DIAGRAM (POSITIVE LOGIC)

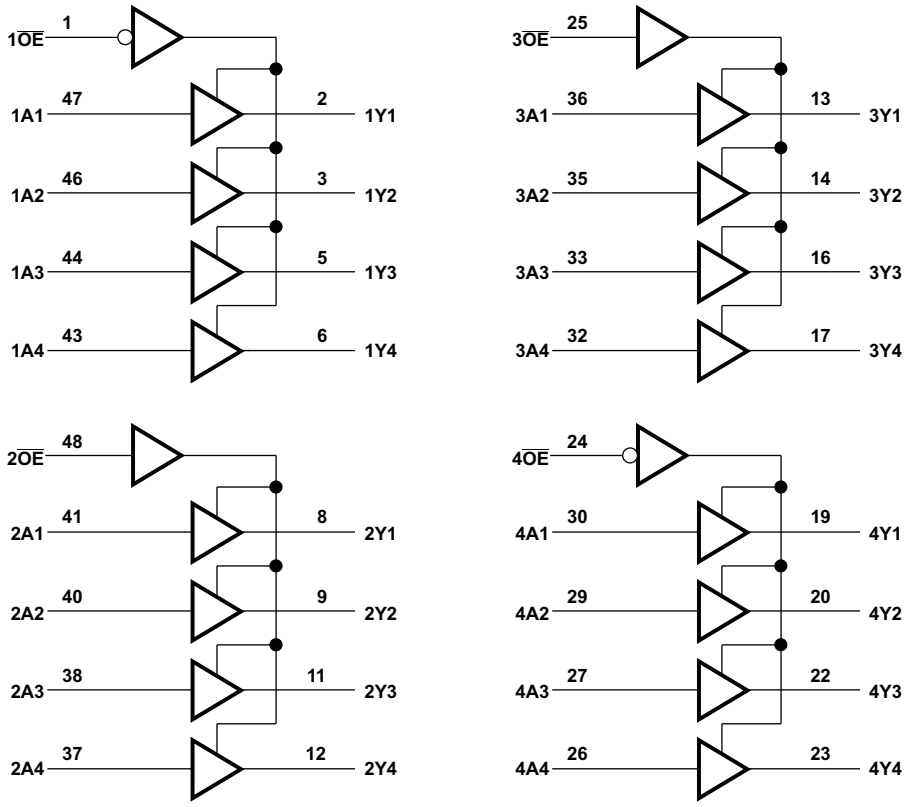

Absolute Maximum Ratings[1]

over operating free-air temperature range (unless otherwise noted)

			MIN	MAX	UNIT
V_{CC}	Supply voltage range		–0.5	4.6	V
V_I	Input voltage range[2]		–0.5	7	V
V_O	Voltage range applied to any output in the high-impedance or power-off state[2]		–0.5	7	V
V_O	Voltage range applied to any output in the high state[2]		–0.5	V_{CC} + 0.5	V
I_O	Current into any output in the low state	SN54LVTH16240		96	mA
		SN74LVTH16240		128	
I_O	Current into any output in the high state[3]	SN54LVTH16240		48	mA
		SN74LVTH16240		64	
I_{IK}	Input clamp current	$V_I < 0$		–50	mA
I_{OK}	Output clamp current	$V_O < 0$		–50	mA
θ_{JA}	Package thermal impedance[4]	DGG package		89	°C/W
		DL package		94	
T_{stg}	Storage temperature range		–65	150	°C

(1) Stresses beyond those listed under "absolute maximum ratings" may cause permanent damage to the device. These are stress ratings only, and functional operation of the device at these or any other conditions beyond those indicated under "recommended operating conditions" is not implied. Exposure to absolute-maximum-rated conditions for extended periods may affect device reliability.
(2) The input and output negative-voltage ratings may be exceeded if the input and output clamp-current ratings are observed.
(3) This current flows only when the output is in the high state and $V_O > V_{CC}$.
(4) The package thermal impedance is calculated in accordance with JESD 51.

Recommended Operating Conditions[1]

			SN54LVTH16240		SN74LVTH16240		UNIT
			MIN	MAX	MIN	MAX	
V_{CC}	Supply voltage		2.7	3.6	2.7	3.6	V
V_{IH}	High-level input voltage		2		2		V
V_{IL}	Low-level input voltage			0.8		0.8	V
V_I	Input voltage			5.5		5.5	V
I_{OH}	High-level output current			–24		–32	mA
I_{OL}	Low-level output current			48		64	mA
$\Delta t/\Delta v$	Input transition rise or fall rate	Outputs enabled		10		10	ns/V
$\Delta t/\Delta V_{CC}$	Power-up ramp rate		200		200		µs/V
T_A	Operating free-air temperature		–55	125	–40	85	°C

(1) All unused control inputs of the device must be held at V_{CC} or GND to ensure proper device operation. Refer to the TI application report, *Implications of Slow or Floating CMOS Inputs*, literature number SCBA004.

Electrical Characteristics

over recommended operating free-air temperature range (unless otherwise noted)

PARAMETER		TEST CONDITIONS		SN54LVTH16240			SN74LVTH16240			UNIT
				MIN	TYP(1)	MAX	MIN	TYP(1)	MAX	
V_{IK}		V_{CC} = 2.7 V,	I_I = –18 mA			–1.2			–1.2	V
V_{OH}		V_{CC} = 2.7 V to 3.6 V,	I_{OH} = –100 µA	V_{CC} – 0.2			V_{CC} – 0.2			V
		V_{CC} = 2.7 V,	I_{OH} = –8 mA	2.4			2.4			
		V_{CC} = 3 V	I_{OH} = –24 mA	2						
			I_{OH} = –32 mA				2			
V_{OL}		V_{CC} = 2.7 V	I_{OL} = 100 µA			0.2			0.2	V
			I_{OL} = 24 mA			0.5			0.5	
		V_{CC} = 3 V	I_{OL} = 16 mA			0.4			0.4	
			I_{OL} = 32 mA			0.5			0.5	
			I_{OL} = 48 mA			0.55				
			I_{OL} = 64 mA						0.55	
I_I		V_{CC} = 0 or 3.6 V,	V_I = 5.5 V			10			10	µA
	Control inputs	V_{CC} = 3.6 V,	V_I = V_{CC} or GND			±1			±1	
	Data inputs	V_{CC} = 3.6 V	V_I = V_{CC}			1			1	
			V_I = 0			–5			–5	
I_{off}		V_{CC} = 0,	V_I or V_O = 0 to 4.5 V						±100	µA
$I_{I(hold)}$	Data inputs	V_{CC} = 3 V	V_I = 0.8 V	75			75			µA
			V_I = 2 V	–75			–75			
		V_{CC} = 3.6 V(2),	V_I = 0 to 3.6 V						500 –750	
I_{OZH}		V_{CC} = 3.6 V,	V_O = 3 V			5			5	µA
I_{OZL}		V_{CC} = 3.6 V,	V_O = 0.5 V			–5			–5	µA
I_{OZPU}		V_{CC} = 0 to 1.5 V, V_O = 0.5 V to 3 V, $\overline{OE}$ = don't care				±100(3)			±100	µA
I_{OZPD}		V_{CC} = 1.5 V to 0, V_O = 0.5 V to 3 V, $\overline{OE}$ = don't care				±100(3)			±100	µA
I_{CC}		V_{CC} = 3.6 V, I_O = 0, V_I = V_{CC} or GND	Outputs high			0.19			0.19	mA
			Outputs low			5			5	
			Outputs disabled			0.19			0.19	
ΔI_{CC}(4)		V_{CC} = 3 V to 3.6 V, One input at V_{CC} – 0.6 V, Other inputs at V_{CC} or GND				0.2			0.2	mA
C_i		V_I = 3 V or 0			4			4		pF
C_o		V_O = 3 V or 0			9			9		pF

(1) All typical values are at V_{CC} = 3.3 V, T_A = 25°C.
(2) This is the bus-hold maximum dynamic current. It is the minimum overdrive current required to switch the input from one state to another.
(3) On products compliant to MIL-PRF-38535, this parameter is not production tested.
(4) This is the increase in supply current for each input that is at the specified TTL voltage level, rather than V_{CC} or GND.

Switching Characteristics

over recommended operating free-air temperature range, C_L = 50 pF (unless otherwise noted) (see Figure 1)

PARAMETER	FROM (INPUT)	TO (OUTPUT)	SN54LVTH16240				SN74LVTH16240					UNIT
			V_{CC} = 3.3 V ±0.3 V		V_{CC} = 2.7 V		V_{CC} = 3.3 V ±0.3 V			V_{CC} = 2.7 V		
			MIN	MAX	MIN	MAX	MIN	TYP(1)	MAX	MIN	MAX	
t_{PLH}	A	Y	1	3.6		4.1	1	2.2	3.5		4	ns
t_{PHL}			1	3.6		4.1	1	2.7	3.5		4	
t_{PZH}	$\overline{OE}$	Y	1	4.2		5.1	1	2.6	4		4.9	ns
t_{PZL}			1.1	4.6		4.8	1.2	2.6	4.4		4.6	
t_{PHZ}	$\overline{OE}$	Y	1.9	4.7		5.2	2	3.4	4.5		5	ns
t_{PLZ}			1.9	4.4		4.5	2	3.2	4.2		4.2	
$t_{sk(LH)}$									0.5		0.5	ns
$t_{sk(HL)}$									0.5		0.5	

(1) All typical values are at V_{CC} = 3.3 V, T_A = 25°C.

PARAMETER MEASUREMENT INFORMATION

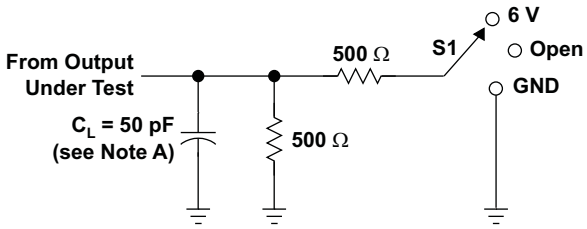

LOAD CIRCUIT

TEST	S1
t_{PLH}/t_{PHL} t_{PLZ}/t_{PZL} t_{PHZ}/t_{PZH}	Open 6 V GND

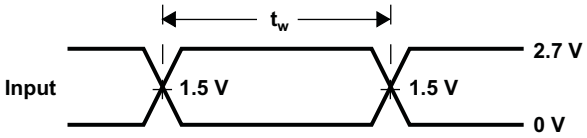

VOLTAGE WAVEFORMS
PULSE DURATION

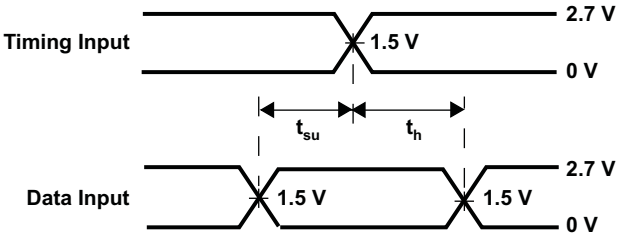

VOLTAGE WAVEFORMS
SETUP AND HOLD TIMES

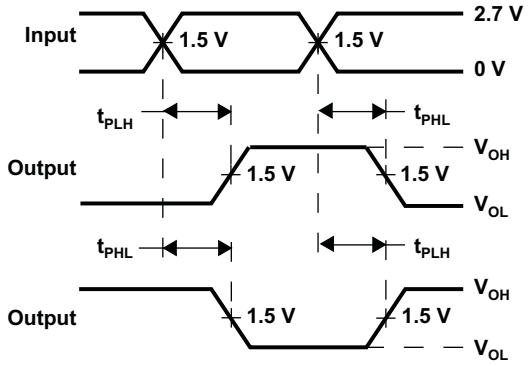

VOLTAGE WAVEFORMS
PROPAGATION DELAY TIMES
INVERTING AND NONINVERTING OUTPUTS

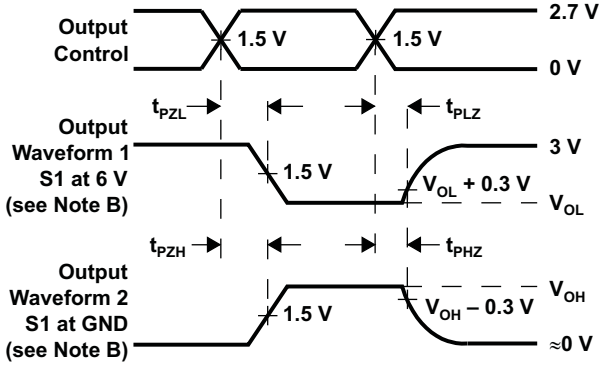

VOLTAGE WAVEFORMS
ENABLE AND DISABLE TIMES
LOW- AND HIGH-LEVEL ENABLING

NOTES: A. C_L includes probe and jig capacitance.
B. Waveform 1 is for an output with internal conditions such that the output is low, except when disabled by the output control. Waveform 2 is for an output with internal conditions such that the output is high, except when disabled by the output control.
C. All input pulses are supplied by generators having the following characteristics: PRR ≤ 10 MHz, Z_O = 50 Ω, t_r ≤ 2.5 ns, t_f ≤ 2.5 ns.
D. The outputs are measured one at a time, with one transition per measurement.

Figure 1. Load Circuit and Voltage Waveforms

PACKAGING INFORMATION

Orderable part number	Status (1)	Material type (2)	Package | Pins	Package qty | Carrier	RoHS (3)	Lead finish/ Ball material (4)	MSL rating/ Peak reflow (5)	Op temp (°C)	Part marking (6)
74LVTH16240DGGRG4	Active	Production	TSSOP (DGG) | 48	2000 | LARGE T&R	Yes	NIPDAU	Level-1-260C-UNLIM	-40 to 85	LVTH16240
74LVTH16240DGGRG4.B	Active	Production	TSSOP (DGG) | 48	2000 | LARGE T&R	Yes	NIPDAU	Level-1-260C-UNLIM	-40 to 85	LVTH16240
SN74LVTH16240DGGR	Active	Production	TSSOP (DGG) | 48	2000 | LARGE T&R	Yes	NIPDAU	Level-1-260C-UNLIM	-40 to 85	LVTH16240
SN74LVTH16240DGGR.B	Active	Production	TSSOP (DGG) | 48	2000 | LARGE T&R	Yes	NIPDAU	Level-1-260C-UNLIM	-40 to 85	LVTH16240
SN74LVTH16240DL	Active	Production	SSOP (DL) | 48	25 | TUBE	Yes	NIPDAU	Level-1-260C-UNLIM	-40 to 85	LVTH16240
SN74LVTH16240DL.B	Active	Production	SSOP (DL) | 48	25 | TUBE	Yes	NIPDAU	Level-1-260C-UNLIM	-40 to 85	LVTH16240
SN74LVTH16240DLR	Active	Production	SSOP (DL) | 48	1000 | LARGE T&R	Yes	NIPDAU	Level-1-260C-UNLIM	-40 to 85	LVTH16240
SN74LVTH16240DLR.B	Active	Production	SSOP (DL) | 48	1000 | LARGE T&R	Yes	NIPDAU	Level-1-260C-UNLIM	-40 to 85	LVTH16240

(1) **Status:** For more details on status, see our product life cycle.

(2) **Material type:** When designated, preproduction parts are prototypes/experimental devices, and are not yet approved or released for full production. Testing and final process, including without limitation quality assurance, reliability performance testing, and/or process qualification, may not yet be complete, and this item is subject to further changes or possible discontinuation. If available for ordering, purchases will be subject to an additional waiver at checkout, and are intended for early internal evaluation purposes only. These items are sold without warranties of any kind.

(3) **RoHS values:** Yes, No, RoHS Exempt. See the TI RoHS Statement for additional information and value definition.

(4) **Lead finish/Ball material:** Parts may have multiple material finish options. Finish options are separated by a vertical ruled line. Lead finish/Ball material values may wrap to two lines if the finish value exceeds the maximum column width.

(5) **MSL rating/Peak reflow:** The moisture sensitivity level ratings and peak solder (reflow) temperatures. In the event that a part has multiple moisture sensitivity ratings, only the lowest level per JEDEC standards is shown. Refer to the shipping label for the actual reflow temperature that will be used to mount the part to the printed circuit board.

(6) **Part marking:** There may be an additional marking, which relates to the logo, the lot trace code information, or the environmental category of the part.

Multiple part markings will be inside parentheses. Only one part marking contained in parentheses and separated by a "~" will appear on a part. If a line is indented then it is a continuation of the previous line and the two combined represent the entire part marking for that device.

Important Information and Disclaimer: The information provided on this page represents TI's knowledge and belief as of the date that it is provided. TI bases its knowledge and belief on information provided by third parties, and makes no representation or warranty as to the accuracy of such information. Efforts are underway to better integrate information from third parties. TI has taken and continues to take reasonable steps to provide representative and accurate information but may not have conducted destructive testing or chemical analysis on incoming materials and chemicals. TI and TI suppliers consider certain information to be proprietary, and thus CAS numbers and other limited information may not be available for release.

In no event shall TI's liability arising out of such information exceed the total purchase price of the TI part(s) at issue in this document sold by TI to Customer on an annual basis.

TAPE AND REEL INFORMATION

REEL DIMENSIONS

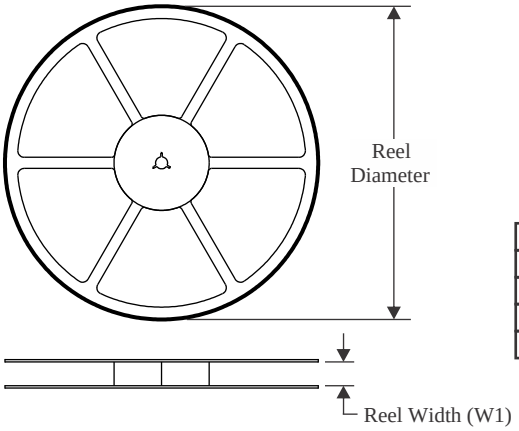

TAPE DIMENSIONS

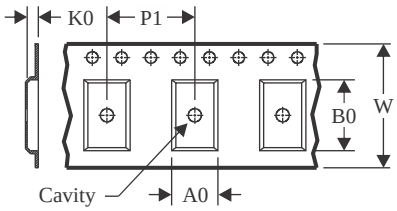

A0	Dimension designed to accommodate the component width
B0	Dimension designed to accommodate the component length
K0	Dimension designed to accommodate the component thickness
W	Overall width of the carrier tape
P1	Pitch between successive cavity centers

QUADRANT ASSIGNMENTS FOR PIN 1 ORIENTATION IN TAPE

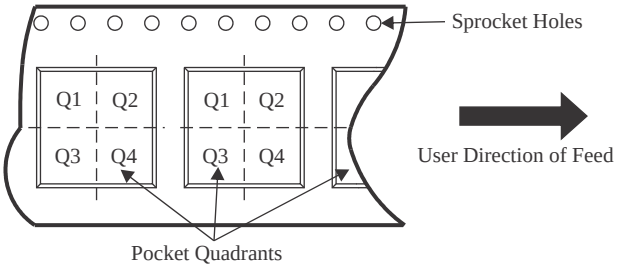

*All dimensions are nominal

Device	Package Type	Package Drawing	Pins	SPQ	Reel Diameter (mm)	Reel Width W1 (mm)	A0 (mm)	B0 (mm)	K0 (mm)	P1 (mm)	W (mm)	Pin1 Quadrant
74LVTH16240DGGRG4	TSSOP	DGG	48	2000	330.0	24.4	8.6	13.0	1.8	12.0	24.0	Q1
SN74LVTH16240DGGR	TSSOP	DGG	48	2000	330.0	24.4	8.6	13.0	1.8	12.0	24.0	Q1
SN74LVTH16240DLR	SSOP	DL	48	1000	330.0	32.4	11.35	16.2	3.1	16.0	32.0	Q1

TAPE AND REEL BOX DIMENSIONS

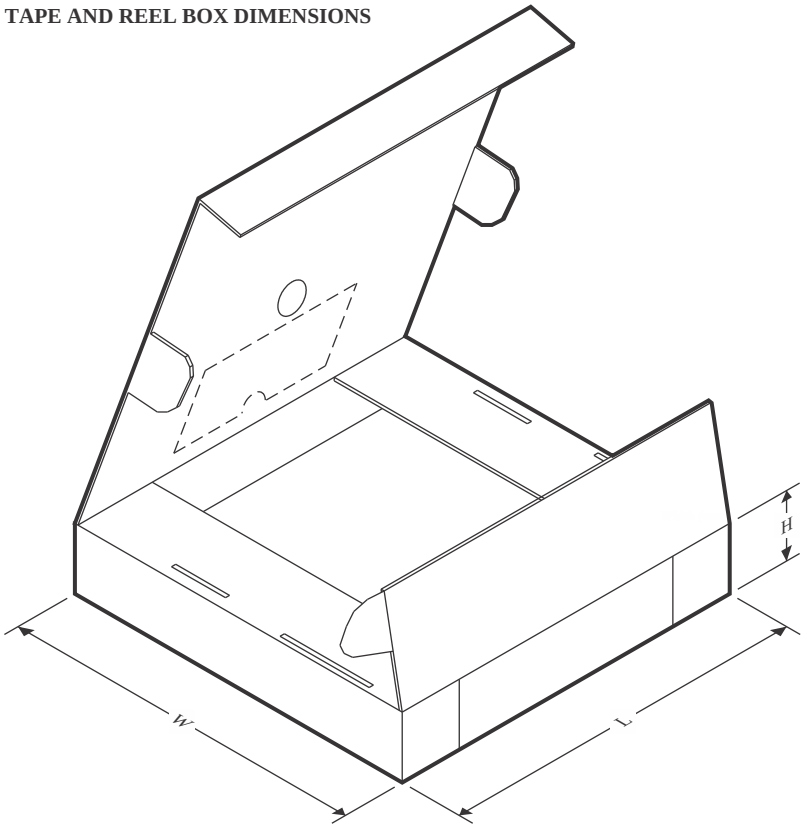

*All dimensions are nominal

Device	Package Type	Package Drawing	Pins	SPQ	Length (mm)	Width (mm)	Height (mm)
74LVTH16240DGGRG4	TSSOP	DGG	48	2000	367.0	367.0	45.0
SN74LVTH16240DGGR	TSSOP	DGG	48	2000	367.0	367.0	45.0
SN74LVTH16240DLR	SSOP	DL	48	1000	367.0	367.0	55.0

TUBE

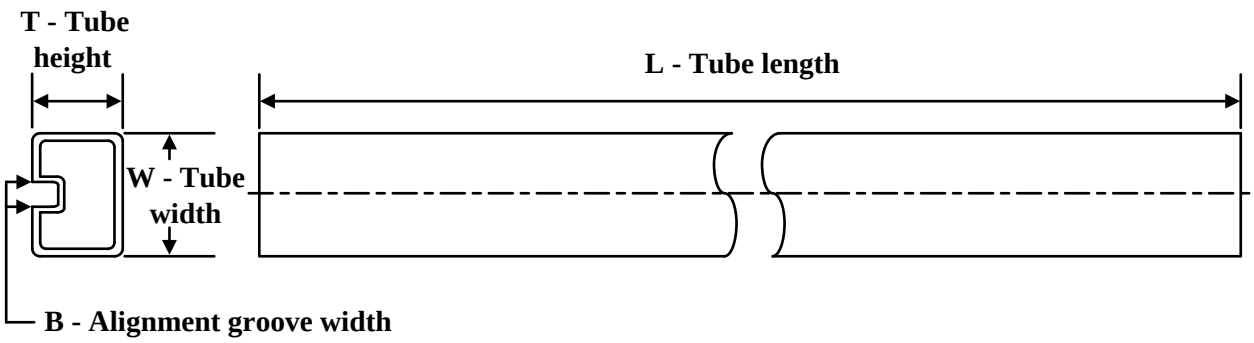

*All dimensions are nominal

Device	Package Name	Package Type	Pins	SPQ	L (mm)	W (mm)	T (µm)	B (mm)
SN74LVTH16240DL	DL	SSOP	48	25	473.7	14.24	5110	7.87
SN74LVTH16240DL.B	DL	SSOP	48	25	473.7	14.24	5110	7.87

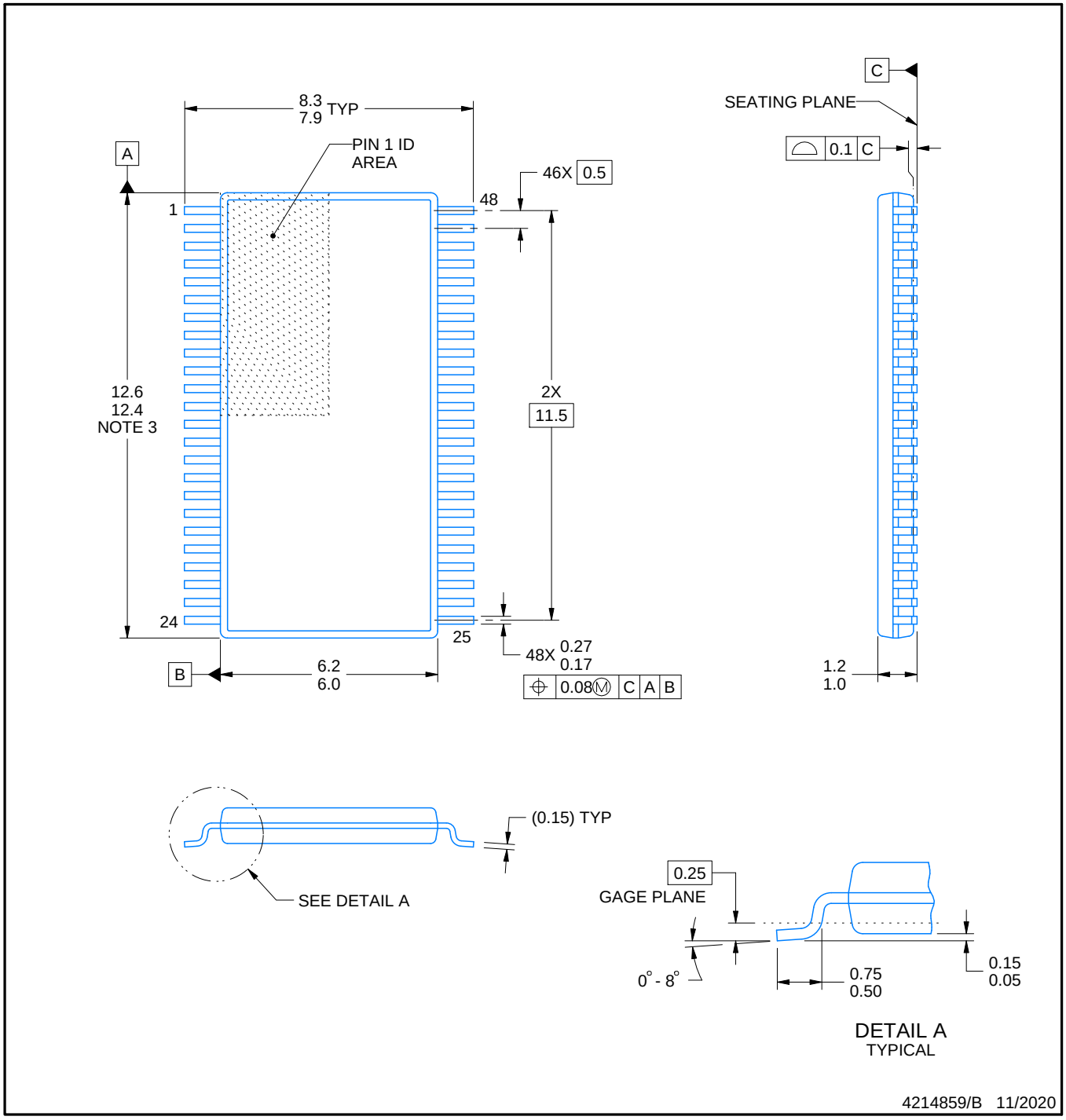

NOTES:

1. All linear dimensions are in millimeters. Any dimensions in parenthesis are for reference only. Dimensioning and tolerancing per ASME Y14.5M.
2. This drawing is subject to change without notice.
3. This dimension does not include mold flash, protrusions, or gate burrs. Mold flash, protrusions, or gate burrs shall not exceed 0.15 mm per side.
4. Reference JEDEC registration MO-153.

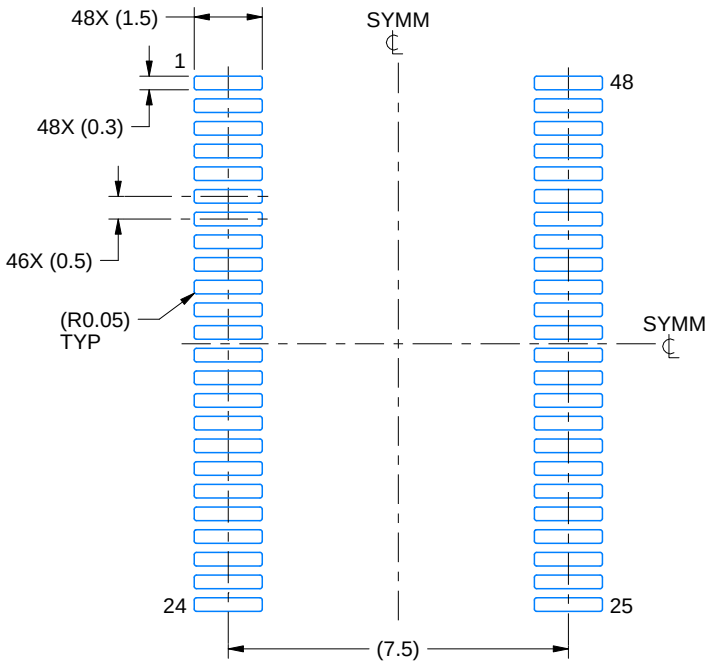

LAND PATTERN EXAMPLE
SCALE:6X

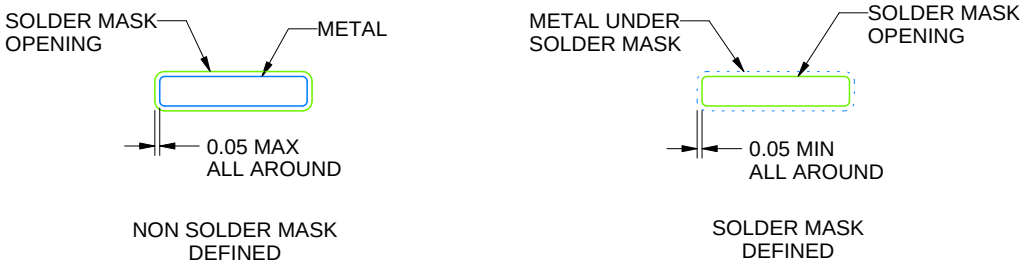

SOLDER MASK DETAILS

4214859/B 11/2020

NOTES: (continued)

5. Publication IPC-7351 may have alternate designs.
6. Solder mask tolerances between and around signal pads can vary based on board fabrication site.

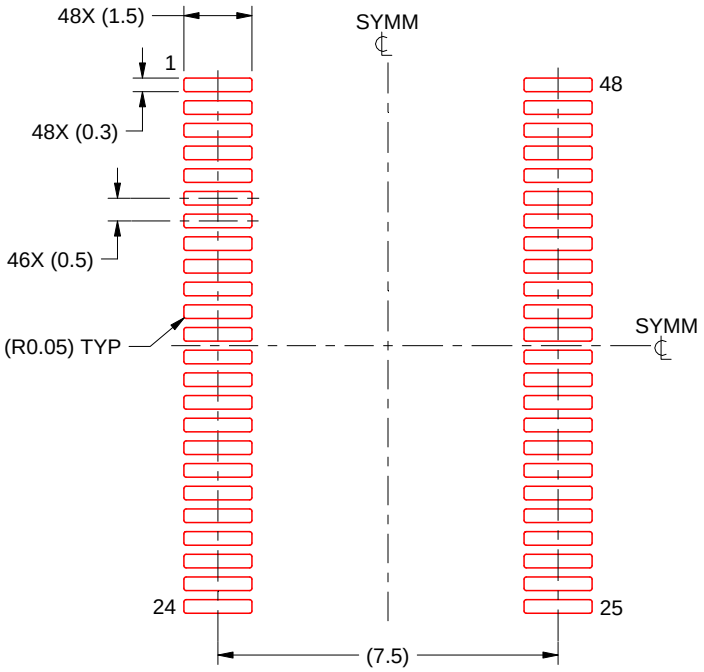

SOLDER PASTE EXAMPLE
BASED ON 0.125 mm THICK STENCIL
SCALE:6X

4214859/B 11/2020

NOTES: (continued)

7. Laser cutting apertures with trapezoidal walls and rounded corners may offer better paste release. IPC-7525 may have alternate design recommendations.
8. Board assembly site may have different recommendations for stencil design.

DGG (R-PDSO-G)** **PLASTIC SMALL-OUTLINE PACKAGE**

48 PINS SHOWN

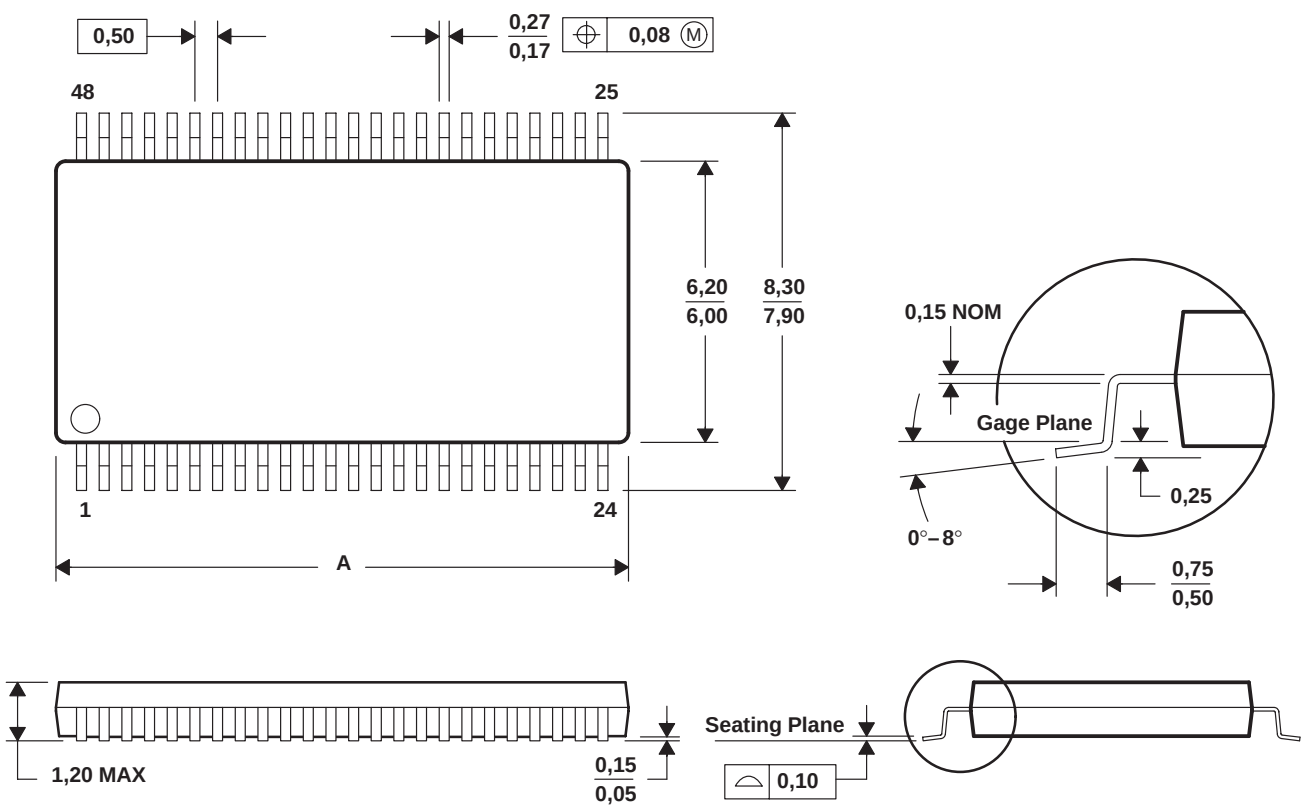

DIM \ PINS **	48	56	64
A MAX	12,60	14,10	17,10
A MIN	12,40	13,90	16,90

4040078/F 12/97

NOTES: A. All linear dimensions are in millimeters.
B. This drawing is subject to change without notice.
C. Body dimensions do not include mold protrusion not to exceed 0,15.
D. Falls within JEDEC MO-153

DL (R–PDSO–G48) PLASTIC SMALL–OUTLINE PACKAGE

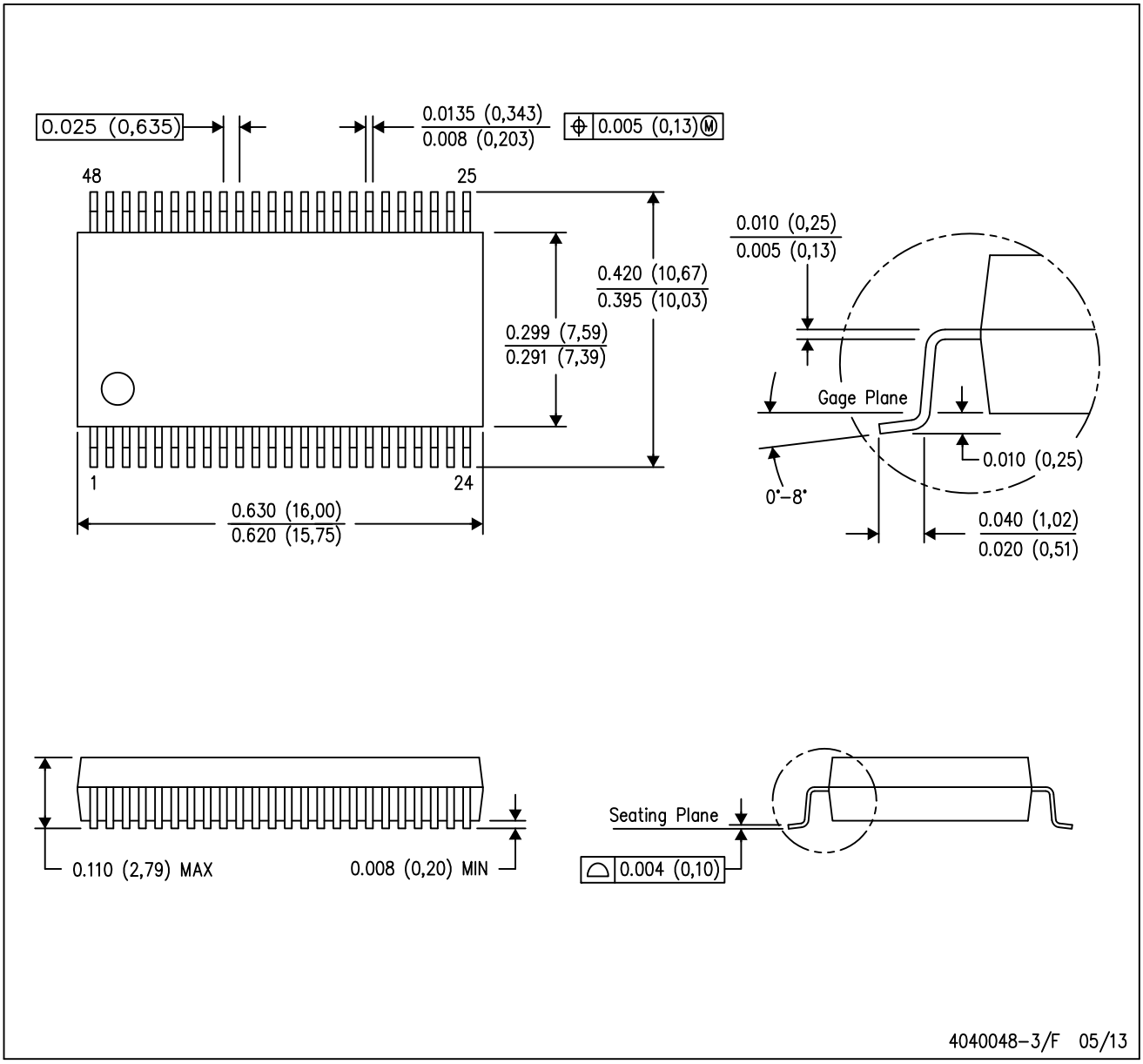

NOTES:
A. All linear dimensions are in inches (millimeters).
B. This drawing is subject to change without notice.
C. Body dimensions do not include mold flash or protrusion not to exceed 0.006 (0,15).
D. Falls within JEDEC MO–118

PowerPAD is a trademark of Texas Instruments.

IMPORTANT NOTICE AND DISCLAIMER

TI PROVIDES TECHNICAL AND RELIABILITY DATA (INCLUDING DATA SHEETS), DESIGN RESOURCES (INCLUDING REFERENCE DESIGNS), APPLICATION OR OTHER DESIGN ADVICE, WEB TOOLS, SAFETY INFORMATION, AND OTHER RESOURCES “AS IS” AND WITH ALL FAULTS, AND DISCLAIMS ALL WARRANTIES, EXPRESS AND IMPLIED, INCLUDING WITHOUT LIMITATION ANY IMPLIED WARRANTIES OF MERCHANTABILITY, FITNESS FOR A PARTICULAR PURPOSE OR NON-INFRINGEMENT OF THIRD PARTY INTELLECTUAL PROPERTY RIGHTS.

These resources are intended for skilled developers designing with TI products. You are solely responsible for (1) selecting the appropriate TI products for your application, (2) designing, validating and testing your application, and (3) ensuring your application meets applicable standards, and any other safety, security, regulatory or other requirements.

These resources are subject to change without notice. TI grants you permission to use these resources only for development of an application that uses the TI products described in the resource. Other reproduction and display of these resources is prohibited. No license is granted to any other TI intellectual property right or to any third party intellectual property right. TI disclaims responsibility for, and you will fully indemnify TI and its representatives against, any claims, damages, costs, losses, and liabilities arising out of your use of these resources.

TI’s products are provided subject to TI’s Terms of Sale or other applicable terms available either on ti.com or provided in conjunction with such TI products. TI’s provision of these resources does not expand or otherwise alter TI’s applicable warranties or warranty disclaimers for TI products.

TI objects to and rejects any additional or different terms you may have proposed.

Mailing Address: Texas Instruments, Post Office Box 655303, Dallas, Texas 75265
Copyright © 2025, Texas Instruments Incorporated