CDCL1810 1.8-V, 10 Output, High-Performance Clock Distributor

1 Features

- Single 1.8-V Supply
- High-Performance Clock Distributor with 10 Outputs
- Low Input-to-Output Additive Jitter: as Low as 10fs RMS
- Output Group Phase Adjustment
- Low-Voltage Differential Signaling (LVDS) Input, 100-Ω Differential On-Chip Termination, up to 650 MHz Frequency
- Differential Current Mode Logic (CML) Outputs, 50-Ω Single-Ended On-Chip Termination, up to 650 MHz Frequency
- Two Groups of Five Outputs Each with Independent Frequency Division Ratios
- Output Frequency Derived with Divide Ratios of 1, 2, 4, 5, 8, 10, 16, 20, 32, 40, and 80
- Meets ANSI TIA/EIA-644-A-2001 LVDS Standard Requirements
- Power Consumption: 410 mW Typical
- Output Enable Control for Each Output and Automatic Output Synchronization
- SDA/SCL Device Management Interface
- 48-pin VQFN (RGZ) Package
- Industrial Temperature Range: –40°C to +85°C

2 Applications

- Distribution for High-Speed SERDES
- Distribution of SERDES Reference Clocks for 1G/10G Ethernet, 1X/2X/4X/10X Fibre Channel, PCI Express, Serial ATA, SONET, CPRI, OBSAI, etc.
- Up to 1-to-10 Clock Buffering and Fan-out

3 Description

The CDCL1810 is a high-performance clock distributor. The programmable dividers, P0 and P1, give a high flexibility to the ratio of the output frequency to the input frequency: $F_{OUT} = F_{IN}/P$, where: P (P0,P1) = 1, 2, 4, 5, 8, 10, 16, 20, 32, 40, 80.

The CDCL1810 supports one differential LVDS clock input and a total of 10 differential CML outputs. The CML outputs are compatible with LVDS receivers if they are ac-coupled.

With careful observation of the input voltage swing and common-mode voltage limits, the CDCL1810 can support a single-ended clock input as outlined in *Pin Configuration and Functions*.

All device settings are programmable through the SDA/SCL, serial two-wire interface. The serial interface is 1.8V tolerant only.

The phase of one output group relative to the other can be adjusted through the SDA/SCL interface. For post-divide ratios (P0, P1) that are multiples of 5, the total number of phase adjustment steps (*n*) equals the divide-ratio divided by 5. For post-divide ratios (P0, P1) that are not multiples of 5, the total number of steps (*n*) is the same as the post-divide ratio. The phase adjustment step (ΔΦ) in time units is given as: $\Delta\Phi = 1/(n \times F_{OUT})$, where F_{OUT} is the respective output frequency.

The device operates in a 1.8-V supply environment and is characterized for operation from –40°C to +85°C. The CDCL1810 is available in a 48-pin VQFN (RGZ) package.

Device Information(1)

PART NUMBER	PACKAGE	BODY SIZE (NOM)
CDCL1810	VQFN (48)	7.00 mm × 7.00 mm

(1) For all available packages, see the orderable addendum at the end of the datasheet.

4 Functional Block Diagram

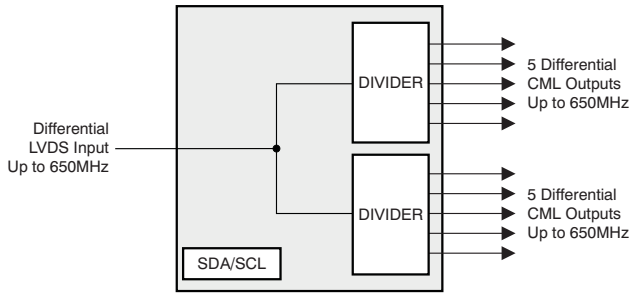

An IMPORTANT NOTICE at the end of this data sheet addresses availability, warranty, changes, use in safety-critical applications, intellectual property matters and other important disclaimers. PRODUCTION DATA.

Table of Contents

1 Features ... 1
2 Applications ... 1
3 Description ... 1
4 Functional Block Diagram ... 1
5 Revision History ... 2
6 Device Comparison Table ... 3
7 Pin Configuration and Functions ... 4
8 Specifications ... 6
8.1 Absolute Maximum Ratings ... 6
8.2 Handling Ratings ... 6
8.3 Recommended Operating Conditions ... 6
8.4 Thermal Information ... 6
8.5 DC Electrical Characteristics ... 6
8.6 AC Electrical Characteristics ... 7
8.7 AC Electrical Characteristics for The SDA/SCL Interface ... 8
8.8 Typical Characteristics ... 9
9 Detailed Description ... 10
9.1 Overview ... 10
9.2 Functional Block Diagrams ... 10
9.3 Feature Description ... 11
9.4 SDA/SCL Connections Recommendations ... 12
9.5 Device Functional Modes ... 12
9.6 Programming ... 13
9.7 SDA/SCL Bus Configuration Command Bitmap ... 15
10 Application and Implementation ... 21
10.1 Application Information ... 21
11 Power Supply Recommendations ... 22
12 Layout ... 22
12.1 Layout Guidelines ... 22
12.2 Layout Example ... 23
13 Device and Documentation Support ... 25
13.1 Trademarks ... 25
13.2 Electrostatic Discharge Caution ... 25
13.3 Glossary ... 25
14 Mechanical, Packaging, and Orderable Information ... 25

5 Revision History

Changes from Revision C (September 2014) to Revision D — **Page**

- Changed the following values in *AC Electrical Characteristics* for Additive clock output jitter (J_{OUT}): 188 to 180, 480 to 348, 514 to 338, 257 to 175, 500 to 347, 570 to 388, 27 to 41, 66 to 36, 72 to 42, 12 to 48, 23 to 33, 27 to 39, 3 to 0.7 ... 7
- Updated Figure 8 ... 21
- Added *Detailed Design Procedure* text ... 21
- Updated images for Figure 9 and Figure 10 ... 22

Changes from Revision B (March 2011) to Revision C — **Page**

- Added, updated, or renamed the following sections: Device Information Table, Application and Implementation; Power Supply Recommendations; Layout; Device and Documentation Support; Mechanical, Packaging, and Ordering Information ... 1
- Added "and Automatic Output Synchronization" in *Features* ... 1
- Deleted "Clock Synthesis" and "Synthesis" from *Applications* ... 1
- Added *Output Enable/Disable* to *Feature Description* section ... 11
- Added Figure 5 to Feature Description ... 11

Changes from Revision A (March 2007) to Revision B — **Page**

- Changed the *Decscription* paragraph starting with "All device....interface" ... 1
- Added Thermal Information table ... 2
- Changed The Description of row SCL in the Pin Function table: added "SCL tolerated 1.8V on the input only." ... 5
- Changed The Description of row SDA in the Pin Function table: added "SCD tolerates 1.8V on the input only." ... 5
- Changed -0.3 to 4.0 to -0.3 to VDD+0.6 in ABS MAX table ... 6
- Added Thermal Information table ... 6
- Changed the $V_{D,DOUT}$ Test Conditions in the AC Electrical Characteristics table ... 7

Copyright © 2007–2014, Texas Instruments Incorporated

- Added Note 1 to the Function Block Diagram 10
- Added the SDA/SCL Connections Recommendations section 12

6 Device Comparison Table

Table 1. T_A Device Comparison

T_A	PACKAGED DEVICES	FEATURES
–40°C to +85°C	CDCL1810RGZT	48-pin VQFN (RGZ) Package, small tape and reel
–40°C to +85°C	CDCL1810RGZR	48-pin VQFN (RGZ) Package, tape and reel

Table 2. Device Feature Comparison

FEATURE	CDCL1810	CDCL1810A
Divider Synchronization after power up and after each programming access. During Synchronization all outputs Yes No are disabled.	Yes	No
Output Group Phase Adjustment	Yes	No
Device Revision ID	b'011'	b'100'
1:10 Clock Fanout	Yes	Yes
Outputs grouped into two divider banks	Yes	Yes
Individual Output enabled/disable with I2C	Yes	Yes
Continuous and independent operation of outputs which are not programmed, while configuring and programming No Yes other outputs.	No	Yes

Copyright © 2007–2014, Texas Instruments Incorporated

7 Pin Configuration and Functions

48-PIN VQFN
Package RGZ
(Top View)

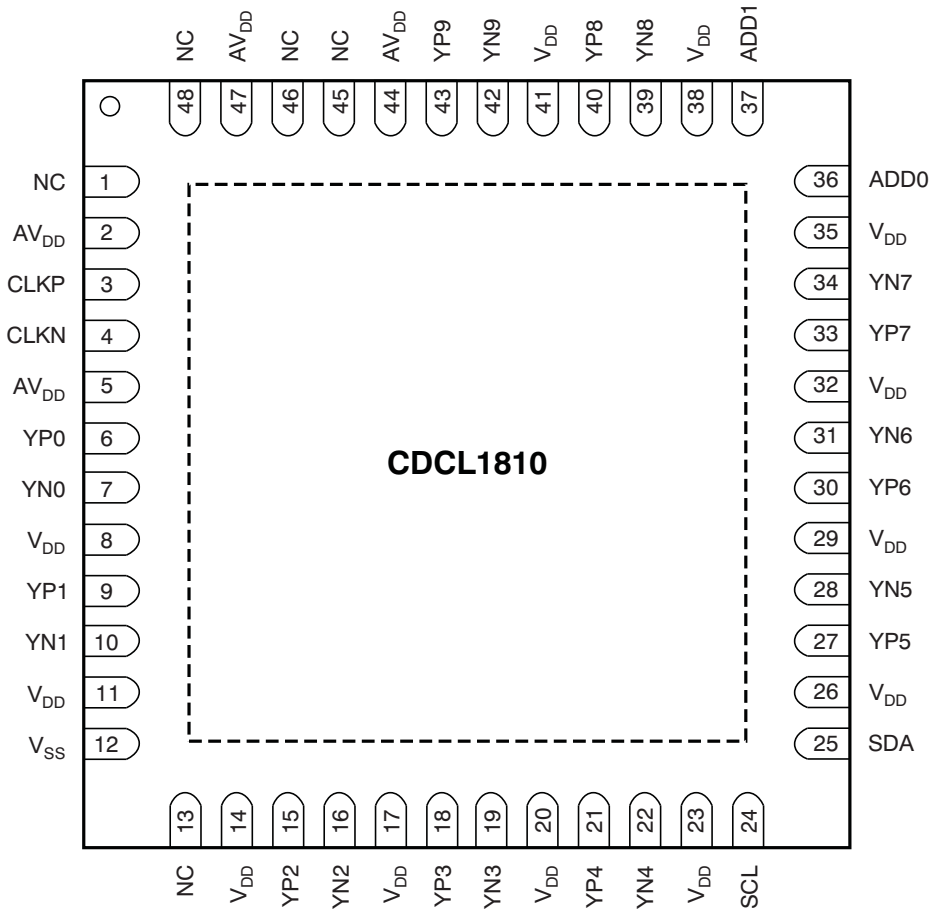

NOTE: Exposed thermal pad must be soldered to V_{SS}.

The CDCL1810 is available in a 48-pin VQFN (RGZ) package with a pin pitch of 0.5 mm. The exposed thermal pad serves both thermal and electrical grounding purposes.

The device must be soldered to ground (V_{SS}) using as many ground vias as possible. The device performance will be severely impacted if the exposed thermal pad is not grounded appropriately.

Copyright © 2007–2014, Texas Instruments Incorporated

Pin Functions

PIN		TYPE	DESCRIPTION
NAME	PIN NO.		
V_{DD}	8, 11, 14, 17, 20, 23, 26, 29, 32, 35, 38, 41	Power	1.8-V digital power supply.
AV_{DD}	2, 5, 44, 47	Power	1.8-V analog power supply.
V_{SS}	Exposed thermal pad and pin 12	Power	Ground reference.
NC	1, 13, 45, 46, 48	I	Not connected; leave open.
CLKP, CLKN	3, 4	I	Differential LVDS input. Single-ended 1.8-V input can be dc-coupled to pin 3 with pin 4 either tied to pin 3 (recommended) or left open.
YP0, YN0 YP1, YN1 YP2, YN2 YP3, YN3 YP4, YN4 YP5, YN5 YP6, YN6 YP7, YN7 YP8, YN8 YP9, YN9	6, 7 9, 10 15, 16 18, 19 21, 22 27, 28 30, 31 33, 34 40, 39 43, 42	O	10 differential CML outputs.
SCL	24	I	SCL serial clock pin. SCL tolerated 1.8V on the input only. Open drain. Always connect to a pull-up resistor.
SDA	25	I/O	SDA bidirectional serial data pin. SDA tolerates 1.8 V on the input only.Open drain. Always connect to a pull-up resistor.
ADD1, ADD0	37, 36	I	Configurable least significant bits (ADD[1:0]) of the SDA/SCL device address. The fixed most significant bits (ADD[6:2]) of the 7-bit device address are 11010.

Copyright © 2007–2014, Texas Instruments Incorporated

8 Specifications

8.1 Absolute Maximum Ratings[1]

Over operating free-air temperature range (unless otherwise noted).

		MIN	MAX	UNIT
V_{DD}, AV_{DD}	Supply voltage[2]	–0.3	2.5	V
V_{LVDS}	Voltage range at LVDS input pins[2]	–0.3	VDD+0.6	V
V_I	Voltage range at all non-LVDS input pins[2]	–0.3	VDD+0.6	V

(1) Stresses beyond those listed under *absolute maximum ratings* may cause permanent damage to the device. These are stress ratings only, and functional operation of the device at these or any other conditions beyond those indicated under *recommended operating condition* is not implied. Exposure to absolute-maximum-rated conditions for extended periods may affect device reliability.
(2) All voltage values are with respect to network ground terminal.

8.2 Handling Ratings

			MIN	MAX	UNIT
T_{stg}	Storage temperature range		–65	+150	°C
$V_{(ESD)}$	Electrostatic discharge	Human body model (HBM), per ANSI/ESDA/JEDEC JS-001, all pins[1]		2000	V
		Charged device model (CDM), per JEDEC specification JESD22-C101, all pins[2]		1500	

(1) JEDEC document JEP155 states that 2000-V HBM allows safe manufacturing with a standard ESD control process.
(2) JEDEC document JEP157 states that 1500-V CDM allows safe manufacturing with a standard ESD control process.

8.3 Recommended Operating Conditions

Over operating free-air temperature range (unless otherwise noted).

		MIN	NOM	MAX	UNIT
V_{DD}	Digital supply voltage	1.7	1.8	1.9	V
AV_{DD}	Analog supply voltage	1.7	1.8	1.9	V
T_A	Ambient temperature (no airflow, no heatsink)	–40		+85	°C
T_J	Junction temperature			+105	°C

8.4 Thermal Information

THERMAL METRIC[1]		CDCL1810 RGZ Package 48 PINS	UNIT
$R_{\theta JA}$	Junction-to-ambient thermal resistance[2]	28.3, Airflow = 0 LFM	°C/W
		22.4, Airflow = 50 LFM	
$R_{\theta JC(top)}$	Junction-to-case (top) thermal resistance	20.5	
$R_{\theta JC(bot)}$	Junction-to-case (bottom) thermal resistance	5.3	

(1) For more information about traditional and new thermal metrics, see the *IC Package Thermal Metrics* application report, SPRA953.
(2) No heatsink; power uniformly distributed; 36 ground vias (6 x 6 array) tied to the thermal exposed pad; 4-layer high-K board.

8.5 DC Electrical Characteristics

Over recommended operating conditions (unless otherwise noted).

		TEST CONDITIONS	MIN	TYP	MAX	UNIT
I_{VDD}	Total current from digital 1.8-V supply	All outputs enabled; $V_{DD} = V_{DD,typ}$ 650MHz LVDS input		212		mA
I_{AVDD}	Total current from analog 1.8-V supply	All outputs enabled; $AV_{DD} = V_{DD,typ}$ 650MHz LVDS input		16		mA
$V_{IL,CMOS}$	Low level CMOS input voltage	V_{DD} = 1.8 V	–0.2		0.6	V
$V_{IH,CMOS}$	High level CMOS input voltage	V_{DD} = 1.8 V	V_{DD} –0.6		V_{DD}	V

Copyright © 2007–2014, Texas Instruments Incorporated

DC Electrical Characteristics (continued)

Over recommended operating conditions (unless otherwise noted).

		TEST CONDITIONS	MIN	TYP	MAX	UNIT
$I_{IL,CMOS}$	Low level CMOS input current	$V_{DD} = V_{DD,max}$, V_{IL} = 0.0 V			–120	µA
$I_{IH,CMOS}$	High level CMOS input current	$V_{DD} = V_{DD,max}$, V_{IH} = 1.9 V			65	µA
$V_{OL,SDA}$	Low level CMOS output voltage for the SDA pin	Sink current = 3 mA	0		$0.2V_{DD}$	V
$I_{OL,CMOS}$	Low level CMOS output current				8	mA

8.6 AC Electrical Characteristics

Over recommended operating conditions (unless otherwise noted).

			TEST CONDITIONS	MIN	TYP	MAX	UNIT
$Z_{D,IN}$	Differential input impedance for the LVDS input terminals			90		132	Ω
$V_{CM,IN}$	Common-mode voltage, LVDS input			1125	1200	1375	mV
$V_{S,IN}$	Single-ended LVDS input voltage swing			100		600	mV_{PP}
$V_{D,IN}$	Differential LVDS input voltage swing			200		1200	mV_{PP}
$t_{R,OUT}$, $t_{F,OUT}$	Output signal rise/fall time		20%–80%		100		ps
$V_{CM,OUT}$	Common-mode voltage, CML outputs			V_{DD} – 0.31	V_{DD} – 0.23	V_{DD} – 0.19	V
$V_{S,OUT}$	Single-ended CML output voltage swing		ac-coupled	180	230	280	mV_{PP}
$V_{D,OUT}$	Differential CML output voltage swing		measured in a 50-Ω scope; The CML output incorporates 50-Ω resistors to VDD	360	460	560	mV_{PP}
F_{IN}	Clock input frequency					650	MHz
F_{OUT}	Clock output frequency					650	MHz
J_{OUT}	Additive clock output jitter	F_{IN} = 30.72MHz, F_{OUT} = 30.72MHz $V_{D,IN}$ = 200mV_{PP}	10Hz–1MHz offset		180		fs RMS
			1MHz–5MHz offset		348		fs RMS
			12kHz–5MHz offset		388		fs RMS
		F_{IN} = 30.72MHz, F_{OUT} = 30.72MHz $V_{D,IN}$ = 1200mV_{PP}	10Hz–1MHz offset		175		fs RMS
			1MHz–5MHz offset		347		fs RMS
			12kHz–5MHz offset		388		fs RMS
		F_{IN} = 650MHz, F_{OUT} = 650MHz $V_{D,IN}$ = 200mV_{PP}	10Hz–1MHz offset		41		fs RMS
			1MHz–20MHz offset		36		fs RMS
			12kHz–20MHz offset		42		fs RMS
		F_{IN} = 650MHz, F_{OUT} = 650MHz $V_{D,IN}$ = 1200mV_{PP}	10Hz–1MHz offset		48		fs RMS
			1MHz–20MHz offset		33		fs RMS
			12kHz–20MHz offset		39		fs RMS
T_P	Input-to-output delay		F_{IN} = 30.72MHz, F_{OUT} = 30.72MHz YP[9:0] outputs		0.7		ns
TS_{OUT}	Clock output skew		F_{IN} = 30.72MHz, F_{OUT} = 30.72MHz YP[9:0] outputs relative to YP[0]	–64		64	ps

8.7 AC Electrical Characteristics for The SDA/SCL Interface(1)

PARAMETER		MIN	TYP	MAX	UNIT
f_{SCL}	SCL frequency			400	kHz
$t_{h(START)}$	START hold time	0.6			µs
$t_{w(SCLL)}$	SCL low-pulse duration	1.3			µs
$t_{w(SCLH)}$	SCL high-pulse duration	0.6			µs
$t_{su(START)}$	START setup time	0.6			µs
$t_{h(SDATA)}$	SDA hold time	0			µs
$t_{su(DATA)}$	SDA setup time	0.6			µs
$t_{r(SDATA)}$	SCL / SDA input rise time			0.3	µs
$t_{f(SDATA)}$	SCL / SDA input fall time			0.3	µs
$t_{su(STOP)}$	STOP setup time	0.6			µs
t_{BUS}	bus free time	1.3			µs

(1) See Figure 1 for the timing behavior.

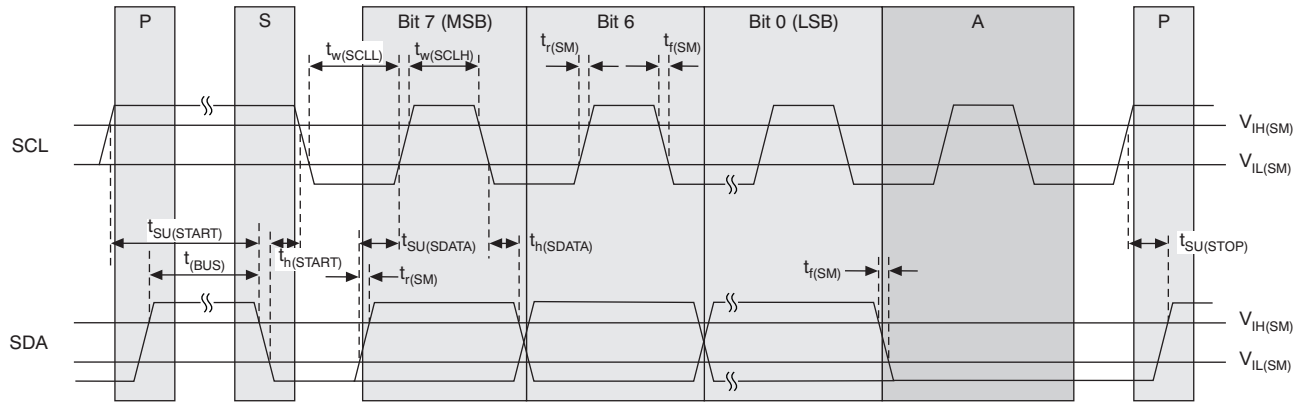

Figure 1. Timing Diagram for the SDA/SCL Serial Control Interface

Copyright © 2007–2014, Texas Instruments Incorporated

8.8 Typical Characteristics

Typical operating conditions are at V_{DD} = 1.8V and T_A = +25°C, $V_{D,IN}$ = 200mV_{PP} (unless otherwise noted).

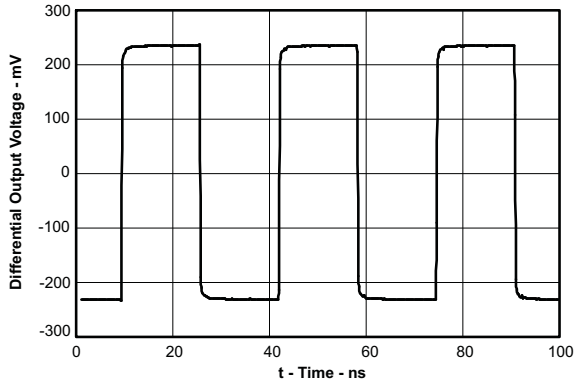

Figure 2. Transient Performance: F_{IN} = 30.72 MHz, F_{OUT} = 30.72 MHz

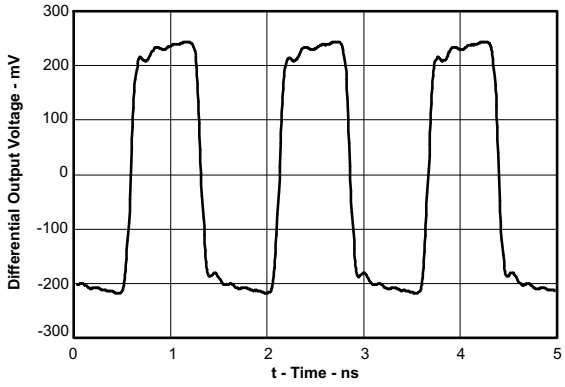

Figure 3. Transient Performance: F_{IN} = 650 MHz, F_{OUT} = 650 MHz

9 Detailed Description

9.1 Overview

The CDCL1810 is a high-performance 10 output clock distributor. The device operates form a single 1.8-V supply. The outputs are grouped in to banks of 5 outputs each with independent frequency division ratios.

9.2 Functional Block Diagrams

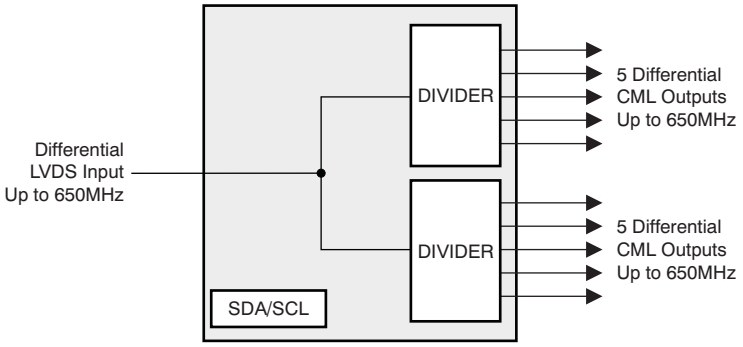

Figure 4. SDA/SCL Interface

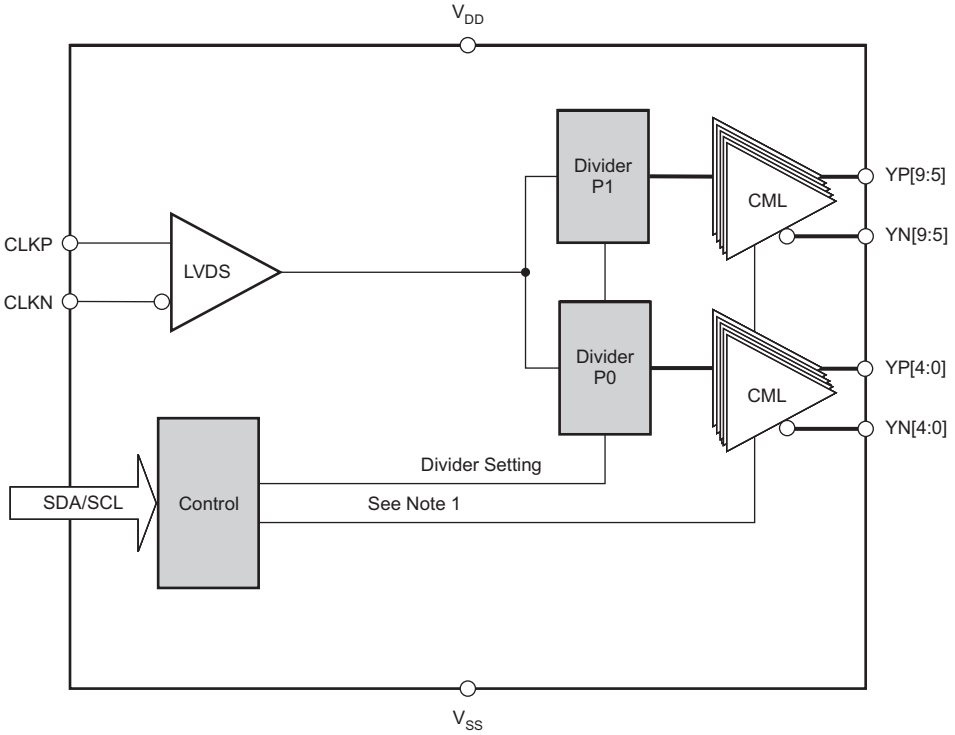

Note 1: Outputs can be disabled to floating. When outputs are left floating, internal 50 Ω termination to V_{DD} pulls both YN and YP to VDD.

Copyright © 2007–2014, Texas Instruments Incorporated

9.3 Feature Description

9.3.1 Output Enable/Disable

The CDCL1810 does not require external output synchronization. Instead the device incorporates a scheme which ensures the output dividers are reset and time synchronized after every write action into the I2C programmable register space.

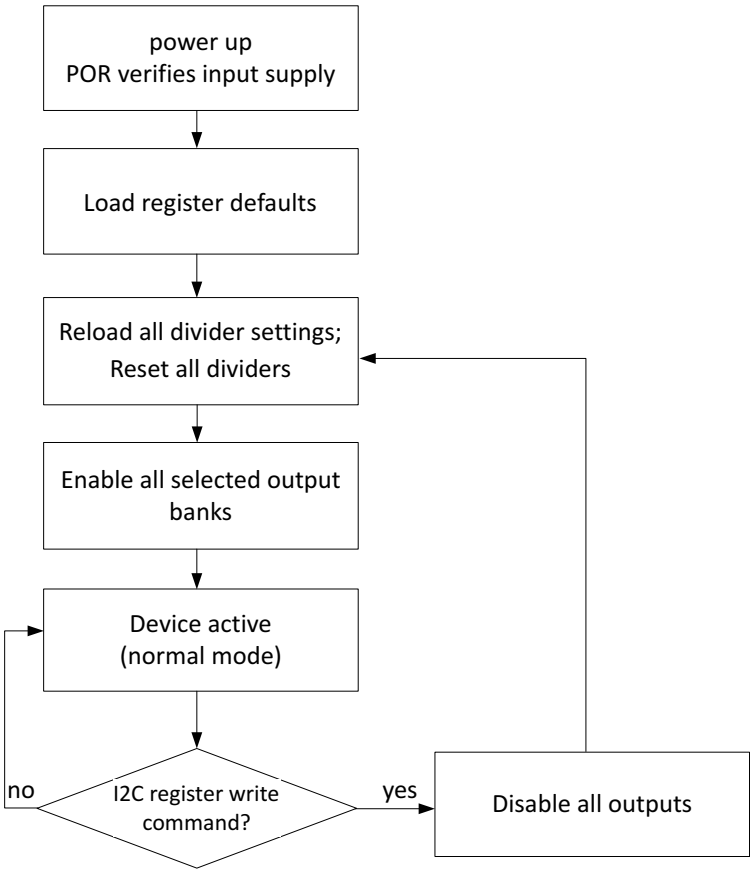

Figure 5. Device Status Flow Chart

9.4 SDA/SCL Connections Recommendations

The serial interface inputs don't have glitch suppression circuit. So, any noises or glitches at serial input lines may cause programming error. The serial interface lines should be routed in such a way that the lines would have minimum noise impact from the surroundings.

Figure 6 is recommended to improve the interconnections.

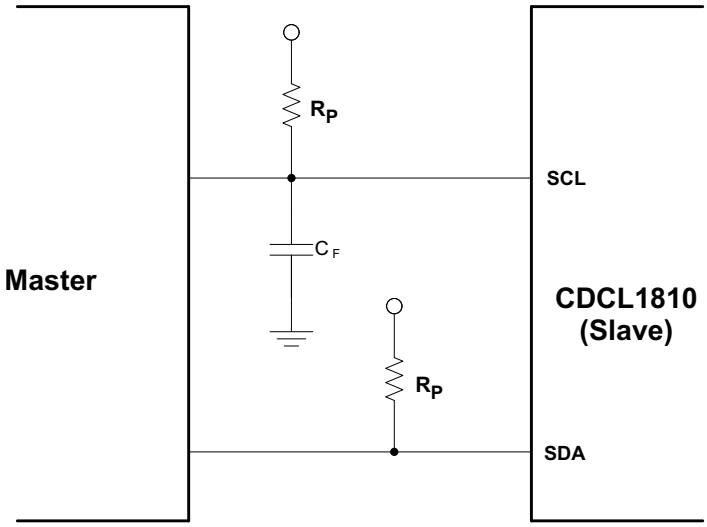

Figure 6. Serial Interface Connections

Lower R_P resistor value (around 1 kΩ) should be chosen so that signals will have faster rise time. A capacitor can be connected to SCL line to ground which will act as a filter.

An I^2C level translator will help to overcome the noises issue.

9.5 Device Functional Modes

The device is designed to operate from an input voltage supply of 1.8 V. In the default power on reset, all device outputs are enabled and the dividers P0 and P1 are set to 1.

Copyright © 2007–2014, Texas Instruments Incorporated

9.6 Programming

9.6.1 SDA/SCL Interface

This section describes the SDA/SCL interface of the CDCL1810 device. The CDCL1810 operates as a slave device of the industry standard 2-pin SDA/SCL bus. It operates in the fast-mode at a bit-rate of up to 400 kbit/s and supports 7-bit addressing compatible with the popular 2-pin serial interface standard.

9.6.1.1 SDA/SCL Bus Slave Device Address

A6	A5	A4	A3	A2	A1	A0	R/W
1	1	0	1	0	ADD1	ADD0	0/1

The device address is made up of the fixed internal address, 11010 (A6:A2), and configurable external pins ADD1 (A1) and ADD0 (A0). Four different devices with addresses 1101000, 1101001, 1101010 and 1101011, can be addressed via the same SDA/SCL bus interface. The least significant bit of the address byte designates a write or read operation.

R/W Bit:

0 = write to CDCL1810 device

1 = read from CDCL1810 device

9.6.1.2 Command Code Definition

BIT	DESCRIPTION
C7	1 = *Byte Write / Read* or *Word Write / Read* operation
(C6:C0)	Byte Offset for *Byte Write / Read* and *Word Write / Read* operation.

COMMAND CODE for *Byte Write / Read* OPERATION	HEX CODE	C7	C6	C5	C4	C3	C2	C1	C0
byte 0	80h	1	0	0	0	0	0	0	0
byte 1	81h	1	0	0	0	0	0	0	1
byte 2	82h	1	0	0	0	0	0	1	0
byte 3	83h	1	0	0	0	0	0	1	1
byte 4	84h	1	0	0	0	0	1	0	0
byte 5	85h	1	0	0	0	0	1	0	1
byte 6	86h	1	0	0	0	0	1	1	0

COMMAND CODE for *Word Write / Read* OPERATION	HEX CODE	C7	C6	C5	C4	C3	C2	C1	C0
word 0: byte 0 and byte 1	80h	1	0	0	0	0	0	0	0
word 1: byte 1 and byte 2	81h	1	0	0	0	0	0	0	1
word 2: byte 2 and byte 3	82h	1	0	0	0	0	0	1	0
word 3: byte 3 and byte 4	83h	1	0	0	0	0	0	1	1
word 4: byte 4 and byte 5	84h	1	0	0	0	0	1	0	0
word 5: byte 5 and byte 6	85h	1	0	0	0	0	1	0	1
word 6: byte 6 and byte 7	86h	1	0	0	0	0	1	1	0

Copyright © 2007–2014, Texas Instruments Incorporated

9.6.1.3 SDA/SCL Programming Sequence

1	7	1	1	8	1	1
S	Slave Address	Wr	A	Data Byte	A	P

S	Start condition
Sr	Repeated start condition
Rd	Read (bit value = 1)
Wr	Write (bit value = 0)
A	Acknowledge (bit value = 0)
N	Not acknowledge (bit value = 1)
P	Stop condition
	Master to Slave transmission
	Slave to Master transmission

Figure 7. Legend for Programming Sequence

***Byte Write* Programming Sequence:**

1	7	1	1	8	1	8	1	1
S	Slave Address	Wr	A	Command Code	A	Data Byte	A	P

***Byte Read* Programming Sequence:**

1	7	1	1	8	1	1	7	1	1	8	1	1
S	Slave Address	Wr	A	Command Code	A	S	Slave Address	Rd	A	Data Byte	N	P

***Word Write* Programming Sequence:**

1	7	1	1	8	1	8	1	8	1	1
S	Slave Address	Wr	A	Command Code	A	Data Byte Low	A	Data Byte High	A	P

***Word Read* Programming Sequence:**

1	7	1	1	8	1	1	7	1	1	8	1	8	1	1
S	Slave Address	Wr	A	Command Code	A	S	Slave Address	Rd	A	Data Byte	A	Data Byte	N	P

Copyright © 2007–2014, Texas Instruments Incorporated

9.7 SDA/SCL Bus Configuration Command Bitmap

9.7.1 Byte 0:

BIT	BIT NAME	DESCRIPTION/FUNCTION	TYPE	POWER UP CONDITION	REFERENCE TO
7	MANF[7]	Manufacturer reserved	R		
6	MANF[6]	Manufacturer reserved	R		
5	MANF[5]	Manufacturer reserved	R		
4	MANF[4]	Manufacturer reserved	R		
3	MANF[3]	Manufacturer reserved	R		
2	MANF[2]	Manufacturer reserved	R		
1	MANF[1]	Manufacturer reserved	R		
0	MANF[0]	Manufacturer reserved	R		

9.7.2 Byte 1:

BIT	BIT NAME	DESCRIPTION/FUNCTION	TYPE	POWER UP CONDITION	REFERENCE TO
7	RES	Reserved	R/W	0	
6	RES	Reserved	R/W	0	
5	ENPH	Phase select enable	R/W	1	
4	PH1[4]	Phase select for YP[9:5] and YN[9:5]	R/W	0	Table 4, Table 5
3	PH1[3]	Phase select for YP[9:5] and YN[9:5]	R/W	0	Table 4, Table 5
2	PH1[2]	Phase select for YP[9:5] and YN[9:5]	R/W	0	Table 4, Table 5
1	PH1[1]	Phase select for YP[9:5] and YN[9:5]	R/W	0	Table 4, Table 5
0	PH1[0]	Phase select for YP[9:5] and YN[9:5]	R/W	0	Table 4, Table 5

9.7.3 Byte 2:

BIT	BIT NAME	DESCRIPTION/FUNCTION	TYPE	POWER UP CONDITION	REFERENCE TO
7	RES	Reserved	R/W	0	
6	RES	Reserved	R/W	0	
5	ENP1	Post-divider P1 enable; if 0 output YP[9:5] and YN[9:5] are disabled	R/W	1	
4	RES	Reserved	R/W	1	
3	SELP1[3]	Divide ratio select for post-divider P1	R/W	0	Table 3
2	SELP1[2]	Divide ratio select for post-divider P1	R/W	0	Table 3
1	SELP1[1]	Divide ratio select for post-divider P1	R/W	0	Table 3
0	SELP1[0]	Divide ratio select for post-divider P1	R/W	0	Table 3

Copyright © 2007–2014, Texas Instruments Incorporated

9.7.4 Byte 3:

BIT	BIT NAME	DESCRIPTION/FUNCTION	TYPE	POWER UP CONDITION	REFERENCE TO
7	RES	Reserved	R/W	0	
6	RES	Reserved	R/W	0	
5	RES	Reserved	R/W	0	
4	PH0[4]	Phase select for YP[4:0] and YN[4:0]	R/W	0	Table 4, Table 5
3	PH0[3]	Phase select for YP[4:0] and YN[4:0]	R/W	0	Table 4, Table 5
2	PH0[2]	Phase select for YP[4:0] and YN[4:0]	R/W	0	Table 4, Table 5
1	PH0[1]	Phase select for YP[4:0] and YN[4:0]	R/W	0	Table 4, Table 5
0	PH0[0]	Phase select for YP[4:0] and YN[4:0]	R/W	0	Table 4, Table 5

9.7.5 Byte 4:

BIT	BIT NAME	DESCRIPTION/FUNCTION	TYPE	POWER UP CONDITION	REFERENCE TO
7	RES	Reserved	R/W	0	
6	RES	Reserved	R/W	0	
5	ENP0	Post-divider P0 enable. If 0, output YP[4:0] and YN[4:0] are disabled	R/W	1	
4	RES	Reserved	R/W	1	
3	SELP0[3]	Divide ratio select for post-divider P0	R/W	0	Table 3
2	SELP0[2]	Divide ratio select for post-divider P0	R/W	0	Table 3
1	SELP0[1]	Divide ratio select for post-divider P0	R/W	0	Table 3
0	SELP0[0]	Divide ratio select for post-divider P0	R/W	0	Table 3

9.7.6 Byte 5:

BIT	BIT NAME	DESCRIPTION/FUNCTION	TYPE	POWER UP CONDITION	REFERENCE TO
7	EN	Chip enable; if 0 chip is in Iddq mode	R/W	1	
6	RES	Reserved	R	1	
5	ENDRV9	YP[9], YN[9] enable; if 0 output is disabled	R/W	1	
4	ENDRV8	YP[8], YN[8] enable; if 0 output is disabled	R/W	1	
3	ENDRV7	YP[7], YN[7] enable; if 0 output is disabled	R/W	1	
2	ENDRV6	YP[6], YN[6] enable; if 0 output is disabled	R/W	1	
1	ENDRV5	YP[5], YN[5] enable; if 0 output is disabled	R/W	1	
0	ENDRV4	YP[4], YN[4] enable; if 0 output is disabled	R/W	1	

Copyright © 2007–2014, Texas Instruments Incorporated

9.7.7 Byte 6:

BIT	BIT NAME	DESCRIPTION/FUNCTION	TYPE	POWER UP CONDITION	REFERENCE TO
7	ENDRV3	YP[3], YN[3] enable; if 0 output is disabled	R/W	1	
6	ENDRV2	YP[2], YN[2] enable; if 0 output is disabled	R/W	1	
5	ENDRV1	YP[1], YN[1] enable; if 0 output is disabled	R/W	1	
4	ENDRV0	YP[0], YN[0] enable; if 0 output is disabled	R/W	1	
3	RES	Reserved	R/W	0	
2	RES	Reserved	R/W	0	
1	RES	Reserved	R/W	0	
0	RES	Reserved	R/W	0	

Table 3. Divide Ratio Settings for Post-Divider P0 or P1

DIVIDE RATIO	SELP1[3] or SELP0[3]	SELP1[2] or SELP0[2]	SELP1[1] or SELP0[1]	SELP1[0] or SELP0[0]	NOTES
1	0	0	0	0	Default
2	0	0	0	1	
4	0	0	1	0	
5	0	0	1	1	
8	0	1	0	0	
10	0	1	0	1	
16	0	1	1	0	
20	0	1	1	1	
32	1	0	0	0	
40	1	0	0	1	
80	1	0	1	0	

Table 4. Phase Settings for Divide Ratio = 5, 10, 20, 40, 80

DIVIDE RATIO	WITH PH0[4:0] = 00000					PHASE LEAD (RADIAN)	NOTES
	PH1						
	[4]	[3]	[2]	[1]	[0]		
5	X	X	X	X	X	0	Phase setting not available
10	X	X	X	0	X	0	
	X	X	X	1	X	(2π/2)	
20	X	X	0	0	X	0	
	X	X	0	1	X	(2π/4)	
	X	X	1	0	X	2(2π/4)	
	X	X	1	1	X	3(2π/4)	
40	X	0	0	0	X	0	
	X	0	0	1	X	(2π/8)	
	X	0	1	0	X	2(2π/8)	
	X	0	1	1	X	3(2π/8)	
	X	1	0	0	X	4(2π/8)	
	X	1	0	1	X	5(2π/8)	
	X	1	1	0	X	6(2π/8)	
	X	1	1	1	X	7(2π/8)	

Copyright © 2007–2014, Texas Instruments Incorporated

Table 4. Phase Settings for Divide Ratio = 5, 10, 20, 40, 80 (continued)

DIVIDE RATIO	WITH PH0[4:0] = 00000					PHASE LEAD (RADIAN)	NOTES
	PH1						
	[4]	[3]	[2]	[1]	[0]		
80	0	0	0	0	X	0	
	0	0	0	1	X	(2π/16)	
	0	0	1	0	X	2(2π/16)	
	0	0	1	1	X	3(2π/16)	
	0	1	0	0	X	4(2π/16)	
	0	1	0	1	X	5(2π/16)	
	0	1	1	0	X	6(2π/16)	
	0	1	1	1	X	7(2π/16)	
	1	0	0	0	X	8(2π/16)	
	1	0	0	1	X	9(2π/16)	
	1	0	1	0	X	10(2π/16)	
	1	0	1	1	X	11(2π/16)	
	1	1	0	0	X	12(2π/16)	
	1	1	0	1	X	13(2π/16)	
	1	1	1	0	X	14(2π/16)	
	1	1	1	1	X	15(2π/16)	

Copyright © 2007–2014, Texas Instruments Incorporated

Table 5. Phase Settings for Divide Ratio = 1, 2, 4, 8, 16, 32

DIVIDE RATIO	WITH PH0[4:0] = 00000					PHASE LEAD (RADIAN)	NOTES
	PH1						
	[4]	[3]	[2]	[1]	[0]		
1	X	X	X	X	X	0	00000: Default Phase setting not available
2	X	X	X	X	0	0	
	X	X	X	X	1	(2π/2)	
4	X	X	X	0	0	0	
	X	X	X	0	1	(2π/4)	
	X	X	X	1	0	2(2π/4)	
	X	X	X	1	1	3(2π/4)	
8	X	X	0	0	0	0	
	X	X	0	0	1	(2π/8)	
	X	X	0	1	0	2(2π/8)	
	X	X	0	1	1	3(2π/8)	
	X	X	1	0	0	4(2π/8)	
	X	X	1	0	1	5(2π/8)	
	X	X	1	1	0	6(2π/8)	
	X	X	1	1	1	7(2π/8)	
16	X	0	0	0	0	0	
	X	0	0	0	1	(2π/16)	
	X	0	0	1	0	2(2π/16)	
	X	0	0	1	1	3(2π/16)	
	X	0	1	0	0	4(2π/16)	
	X	0	1	0	1	5(2π/16)	
	X	0	1	1	0	6(2π/16)	
	X	0	1	1	1	7(2π/16)	
	X	1	0	0	0	8(2π/16)	
	X	1	0	0	1	9(2π/16)	
	X	1	0	1	0	10(2π/16)	
	X	1	0	1	1	11(2π/16)	
	X	1	1	0	0	12(2π/16)	
	X	1	1	0	1	13(2π/16)	
	X	1	1	1	0	14(2π/16)	
	X	1	1	1	1	15(2π/16)	

Copyright © 2007–2014, Texas Instruments Incorporated

Table 5. Phase Settings for Divide Ratio = 1, 2, 4, 8, 16, 32 (continued)

DIVIDE RATIO	WITH PH0[4:0] = 00000					PHASE LEAD (RADIAN)	NOTES
	PH1						
	[4]	[3]	[2]	[1]	[0]		
32	0	0	0	0	0	0	
	0	0	0	0	1	(2π/32)	
	0	0	0	1	0	2(2π/32)	
	0	0	0	1	1	3(2π/32)	
	0	0	1	0	0	4(2π/32)	
	0	0	1	0	1	5(2π/32)	
	0	0	1	1	0	6(2π/32)	
	0	0	1	1	1	7(2π/32)	
	0	1	0	0	0	8(2π/32)	
	0	1	0	0	1	9(2π/32)	
	0	1	0	1	0	10(2π/32)	
	0	1	0	1	1	11(2π/32)	
	0	1	1	0	0	12(2π/32)	
	0	1	1	0	1	13(2π/32)	
	0	1	1	1	0	14(2π/32)	
	0	1	1	1	1	15(2π/32)	
	1	0	0	0	0	16(2π/32)	
	1	0	0	0	1	17(2π/32)	
	1	0	0	1	0	18(2π/32)	
	1	0	0	1	1	19(2π/32)	
	1	0	1	0	0	20(2π/32)	
	1	0	1	0	1	21(2π/32)	
	1	0	1	1	0	22(2π/32)	
	1	0	1	1	1	23(2π/32)	
	1	1	0	0	0	24(2π/32)	
	1	1	0	0	1	25(2π/32)	
	1	1	0	1	0	26(2π/32)	
	1	1	0	1	1	27(2π/32)	
	1	1	1	0	0	28(2π/32)	
	1	1	1	0	1	29(2π/32)	
	1	1	1	1	0	30(2π/32)	
	1	1	1	1	1	31(2π/32)	

Copyright © 2007–2014, Texas Instruments Incorporated

10 Application and Implementation

NOTE

Information in the following applications sections is not part of the TI component specification, and TI does not warrant its accuracy or completeness. TI's customers are responsible for determining suitability of components for their purposes. Customers should validate and test their design implementation to confirm system functionality.

10.1 Application Information

The CDCL1810 is a high-performance buffer that can generate 10 copies of CML clock outputs from a LVDS input. The programmable dividers, P0 and P1, give a high flexibility to the ratio of the output frequency to the input frequency.

10.1.1 Clock Distribution for Multiple TI Keystone DSPs

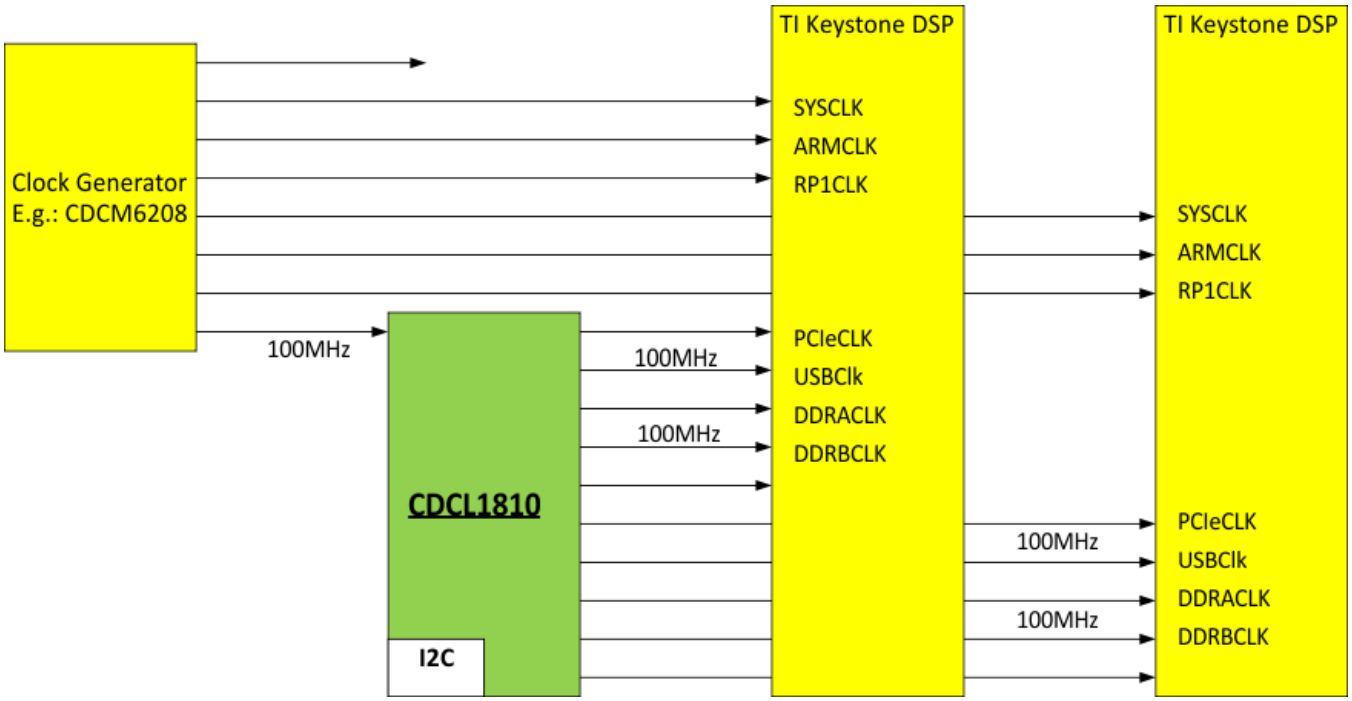

Figure 8. CDCL1810 Application Drawing

10.1.1.1 Design Requirements

A typical application example is multi DSP chip environment. The CDCL1810 is used to buffer the common clocks to the DSP.

10.1.1.2 Detailed Design Procedure

The CDCL1810 supports output group phase alignment, if a divider gets reprogrammed. The output group phase alignment circuit will disable all outputs after changing a single divider. The outputs are enabled after the phases are aligned. See Figure 9.

If an output gets enabled/disabled, the phase synchronization circuit will ensure that all outputs are in phase. To ensure phase alignment the outputs needs to be disabled for a short time. See Figure 10.

Application Information (continued)

10.1.1.3 Application Curves

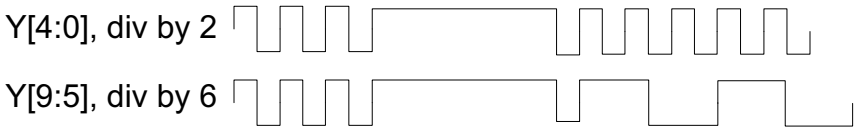

Figure 9. Output Group Divider Change

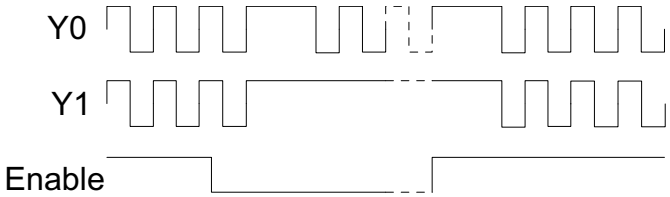

Figure 10. Individual Output Disable/Enable

11 Power Supply Recommendations

The device is designed to operate from an input voltage supply of 1.8 V for analog supply (AVDD) and core supply (VDD). Both AVDD and VDD can be supplied by a single source.

12 Layout

12.1 Layout Guidelines

- Keep the connections between the bypass capacitors and the power supply on the device as short as possible.
- Ground the other side of the capacitor using a low impedance connection to the ground plane.
- If the capacitors are mounted on the back side, 0402 components can be employed; however, soldering to the Thermal Dissipation Pad can be difficult.
- For component side mounting, use 0201 body size capacitors to facilitate signal routing.

NOTE

The device must be soldered to ground (V_{SS}) using as many ground vias as possible. The device performance will be severely impacted if the exposed thermal pad is not grounded appropriately.

Copyright © 2007–2014, Texas Instruments Incorporated

12.2 Layout Example

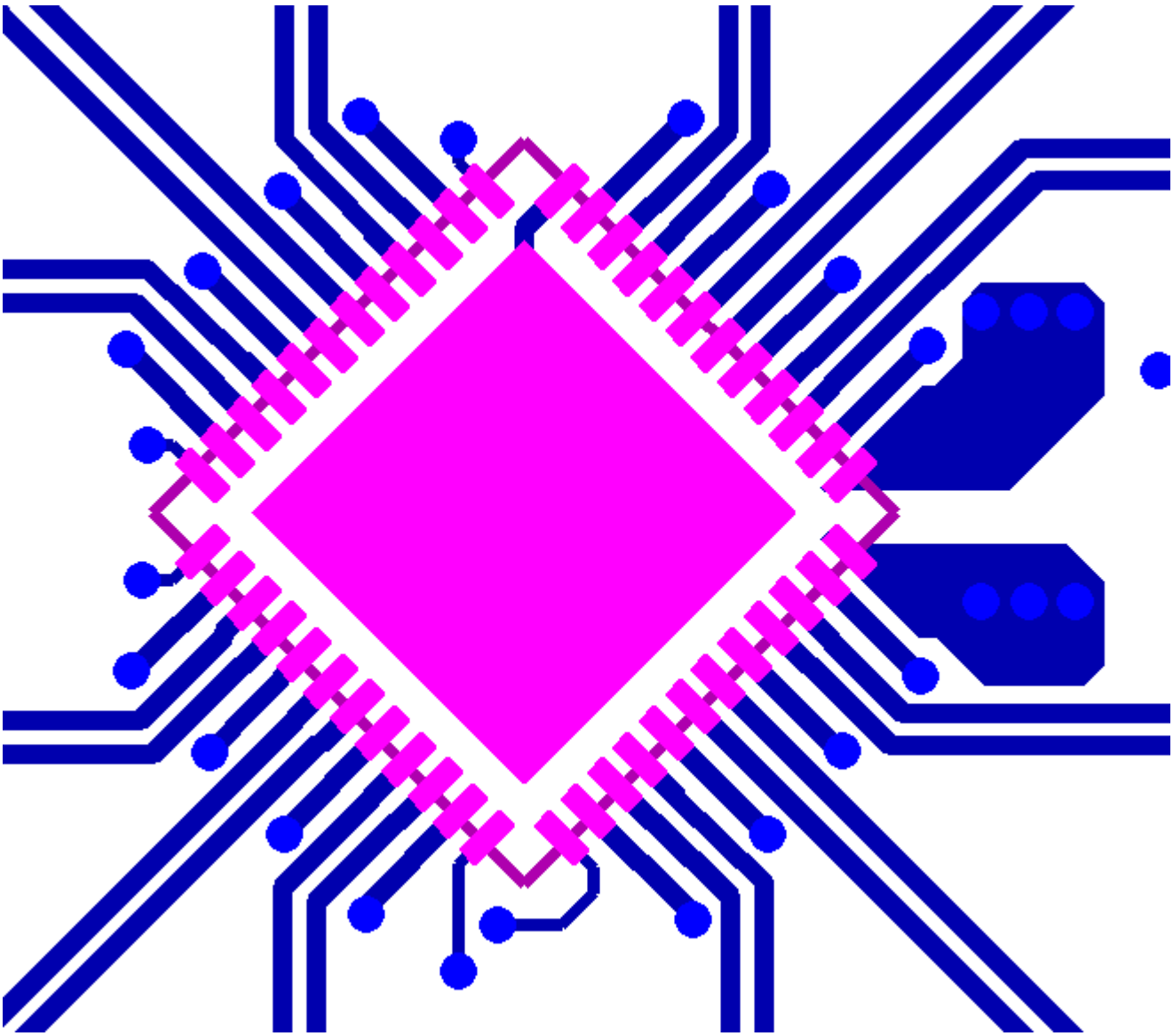

Figure 11. Layout Example: Signal Layer (TOP)

Layout Example (continued)

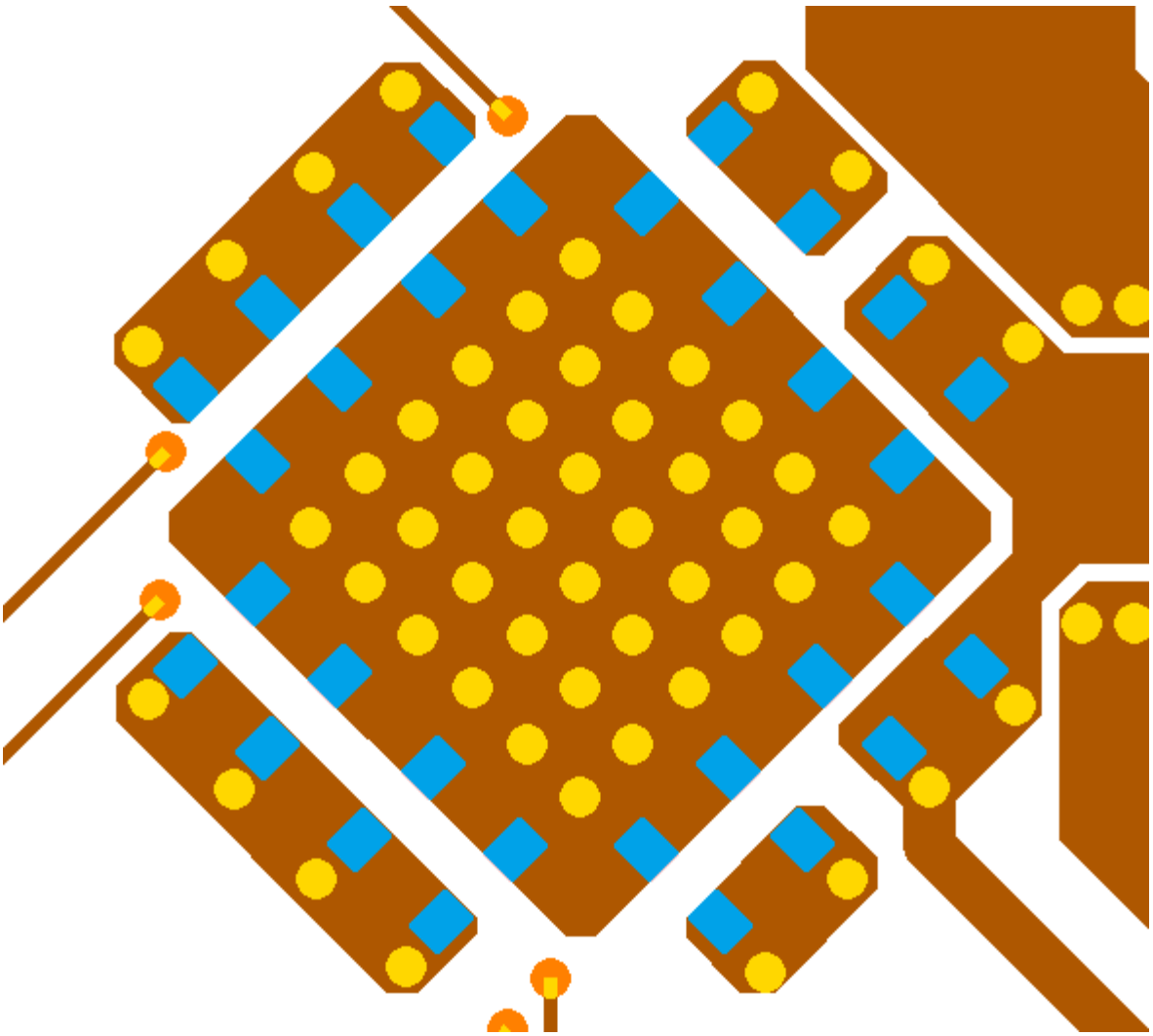

Figure 12. Layout Example: Bottom Layer with Decoupling Capacitors

Copyright © 2007–2014, Texas Instruments Incorporated

13 Device and Documentation Support

13.1 Trademarks

All trademarks are the property of their respective owners.

13.2 Electrostatic Discharge Caution

These devices have limited built-in ESD protection. The leads should be shorted together or the device placed in conductive foam during storage or handling to prevent electrostatic damage to the MOS gates.

13.3 Glossary

SLYZ022 — *TI Glossary*.

This glossary lists and explains terms, acronyms, and definitions.

14 Mechanical, Packaging, and Orderable Information

The following pages include mechanical, packaging, and orderable information. This information is the most current data available for the designated devices. This data is subject to change without notice and revision of this document. For browser-based versions of this data sheet, refer to the left-hand navigation.

PACKAGING INFORMATION

Orderable part number	Status (1)	Material type (2)	Package | Pins	Package qty | Carrier	RoHS (3)	Lead finish/ Ball material (4)	MSL rating/ Peak reflow (5)	Op temp (°C)	Part marking (6)
CDCL1810RGZR	Active	Production	VQFN (RGZ) | 48	2500 | LARGE T&R	Yes	NIPDAU | NIPDAU	Level-3-260C-168 HR	-40 to 85	CDCL 1810
CDCL1810RGZR.A	Active	Production	VQFN (RGZ) | 48	2500 | LARGE T&R	Yes	NIPDAU	Level-3-260C-168 HR	-40 to 85	CDCL 1810
CDCL1810RGZT	Active	Production	VQFN (RGZ) | 48	250 | SMALL T&R	Yes	NIPDAU | NIPDAU	Level-3-260C-168 HR	-40 to 85	CDCL 1810
CDCL1810RGZT.A	Active	Production	VQFN (RGZ) | 48	250 | SMALL T&R	Yes	NIPDAU	Level-3-260C-168 HR	-40 to 85	CDCL 1810

(1) **Status:** For more details on status, see our product life cycle.

(2) **Material type:** When designated, preproduction parts are prototypes/experimental devices, and are not yet approved or released for full production. Testing and final process, including without limitation quality assurance, reliability performance testing, and/or process qualification, may not yet be complete, and this item is subject to further changes or possible discontinuation. If available for ordering, purchases will be subject to an additional waiver at checkout, and are intended for early internal evaluation purposes only. These items are sold without warranties of any kind.

(3) **RoHS values:** Yes, No, RoHS Exempt. See the TI RoHS Statement for additional information and value definition.

(4) **Lead finish/Ball material:** Parts may have multiple material finish options. Finish options are separated by a vertical ruled line. Lead finish/Ball material values may wrap to two lines if the finish value exceeds the maximum column width.

(5) **MSL rating/Peak reflow:** The moisture sensitivity level ratings and peak solder (reflow) temperatures. In the event that a part has multiple moisture sensitivity ratings, only the lowest level per JEDEC standards is shown. Refer to the shipping label for the actual reflow temperature that will be used to mount the part to the printed circuit board.

(6) **Part marking:** There may be an additional marking, which relates to the logo, the lot trace code information, or the environmental category of the part.

Multiple part markings will be inside parentheses. Only one part marking contained in parentheses and separated by a "~" will appear on a part. If a line is indented then it is a continuation of the previous line and the two combined represent the entire part marking for that device.

Important Information and Disclaimer: The information provided on this page represents TI's knowledge and belief as of the date that it is provided. TI bases its knowledge and belief on information provided by third parties, and makes no representation or warranty as to the accuracy of such information. Efforts are underway to better integrate information from third parties. TI has taken and continues to take reasonable steps to provide representative and accurate information but may not have conducted destructive testing or chemical analysis on incoming materials and chemicals. TI and TI suppliers consider certain information to be proprietary, and thus CAS numbers and other limited information may not be available for release.

In no event shall TI's liability arising out of such information exceed the total purchase price of the TI part(s) at issue in this document sold by TI to Customer on an annual basis.

GENERIC PACKAGE VIEW

RGZ 48

VQFN - 1 mm max height

7 x 7, 0.5 mm pitch

PLASTIC QUADFLAT PACK- NO LEAD

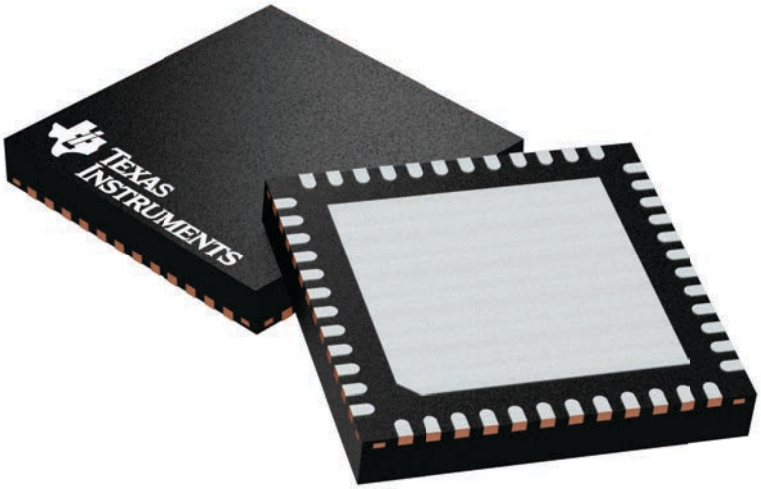

Images above are just a representation of the package family, actual package may vary.
Refer to the product data sheet for package details.

4224671/A

RGZ0048B

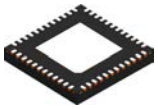

PACKAGE OUTLINE

VQFN - 1 mm max height

PLASTIC QUAD FLATPACK - NO LEAD

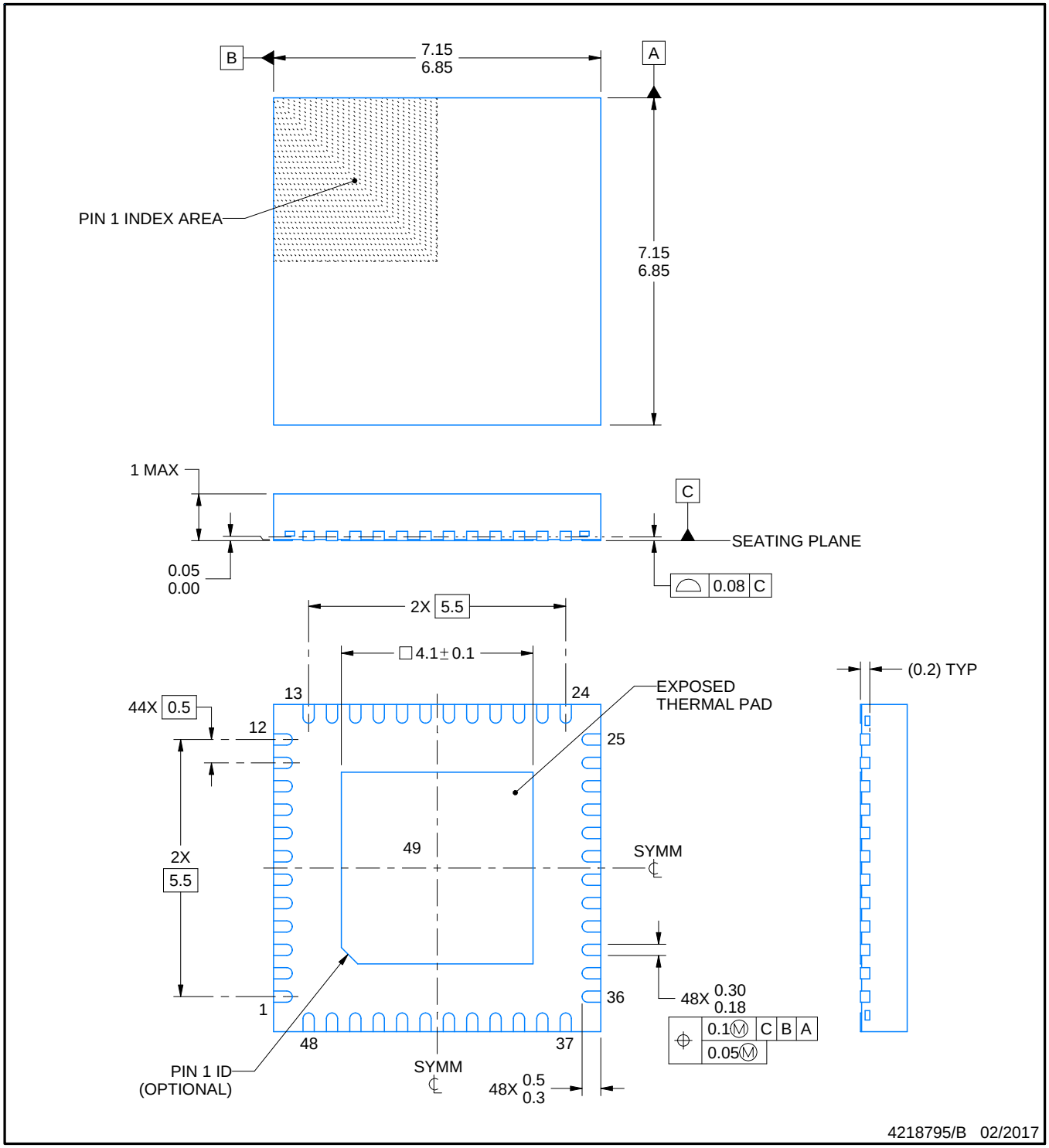

NOTES:

1. All linear dimensions are in millimeters. Any dimensions in parenthesis are for reference only. Dimensioning and tolerancing per ASME Y14.5M.
2. This drawing is subject to change without notice.
3. The package thermal pad must be soldered to the printed circuit board for thermal and mechanical performance.

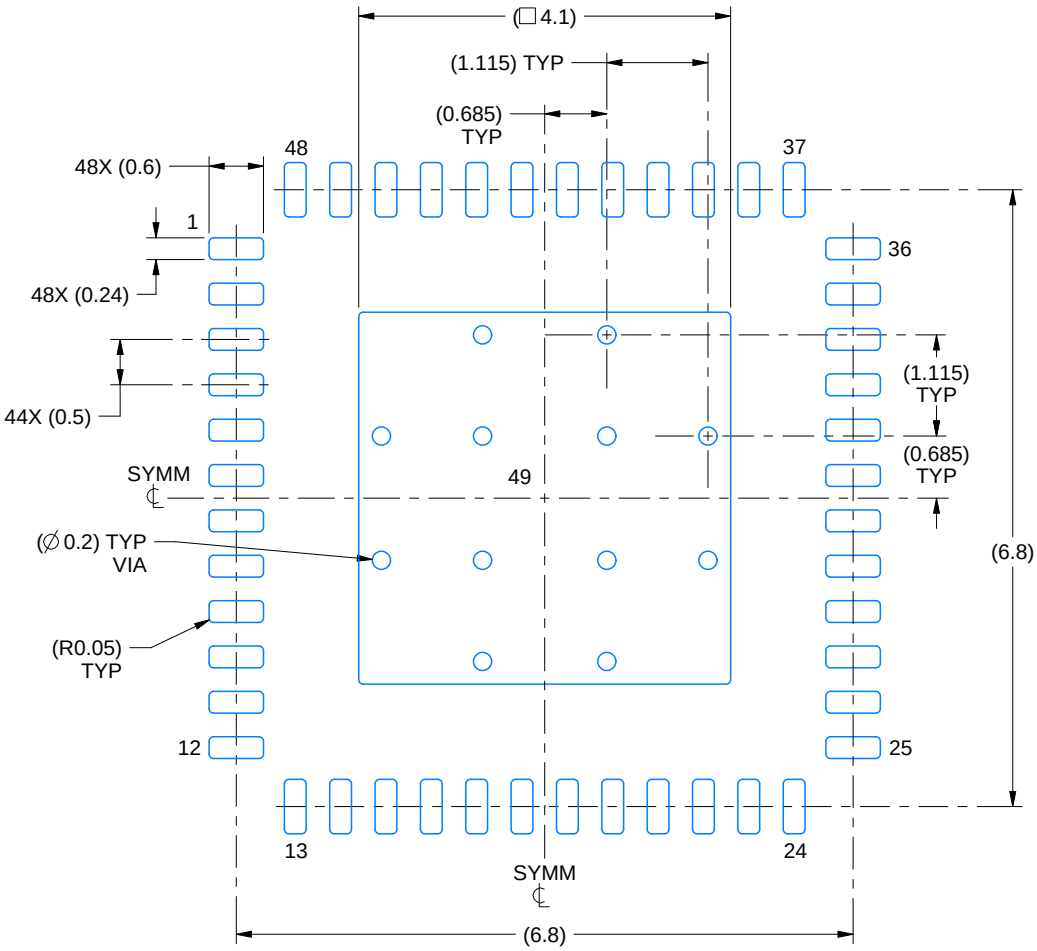

LAND PATTERN EXAMPLE
EXPOSED METAL SHOWN
SCALE:12X

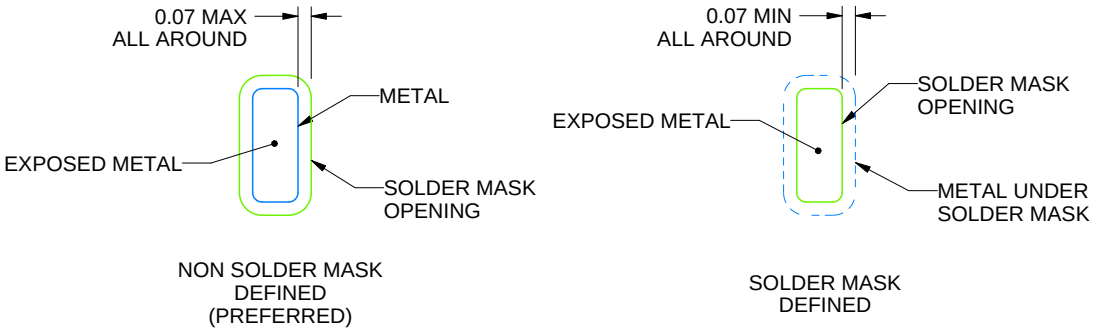

SOLDER MASK DETAILS

4218795/B 02/2017

NOTES: (continued)

4. This package is designed to be soldered to a thermal pad on the board. For more information, see Texas Instruments literature number SLUA271 (www.ti.com/lit/slua271).
5. Vias are optional depending on application, refer to device data sheet. If any vias are implemented, refer to their locations shown on this view. It is recommended that vias under paste be filled, plugged or tented.

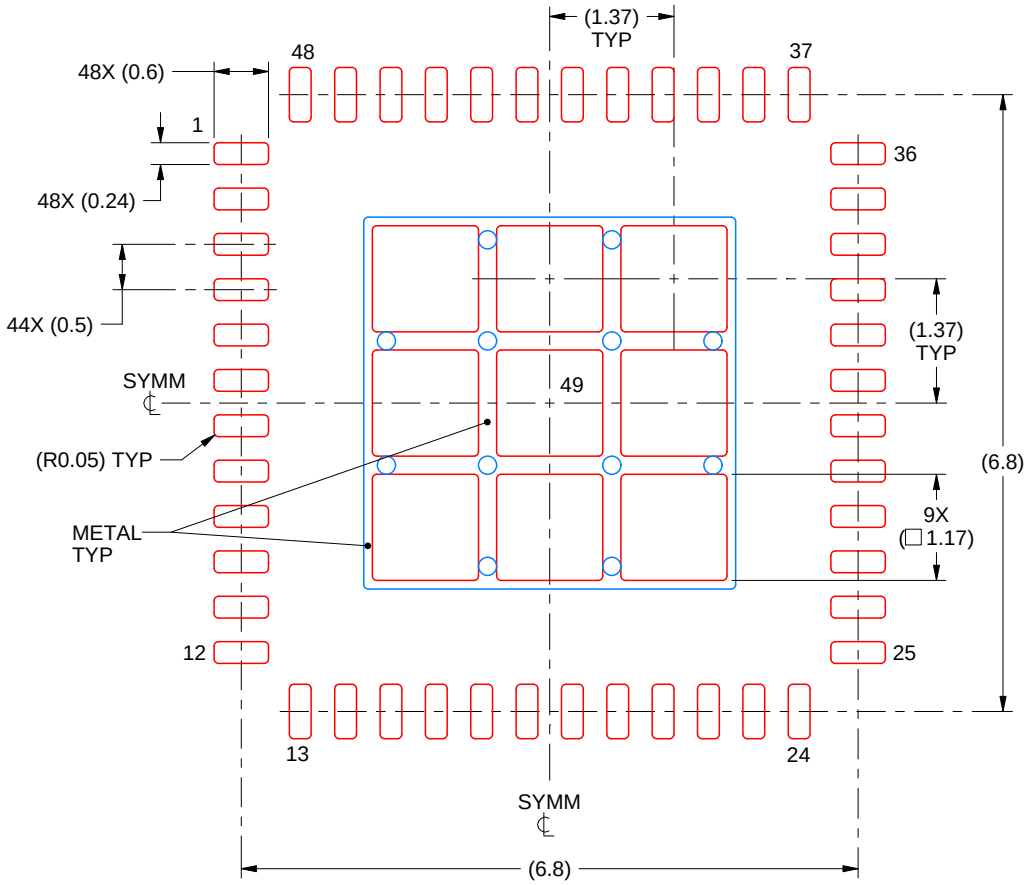

SOLDER PASTE EXAMPLE
BASED ON 0.125 mm THICK STENCIL

EXPOSED PAD 49
73% PRINTED SOLDER COVERAGE BY AREA UNDER PACKAGE
SCALE:12X

4218795/B 02/2017

NOTES: (continued)

6. Laser cutting apertures with trapezoidal walls and rounded corners may offer better paste release. IPC-7525 may have alternate design recommendations.

IMPORTANT NOTICE AND DISCLAIMER

TI PROVIDES TECHNICAL AND RELIABILITY DATA (INCLUDING DATA SHEETS), DESIGN RESOURCES (INCLUDING REFERENCE DESIGNS), APPLICATION OR OTHER DESIGN ADVICE, WEB TOOLS, SAFETY INFORMATION, AND OTHER RESOURCES “AS IS” AND WITH ALL FAULTS, AND DISCLAIMS ALL WARRANTIES, EXPRESS AND IMPLIED, INCLUDING WITHOUT LIMITATION ANY IMPLIED WARRANTIES OF MERCHANTABILITY, FITNESS FOR A PARTICULAR PURPOSE OR NON-INFRINGEMENT OF THIRD PARTY INTELLECTUAL PROPERTY RIGHTS.

These resources are intended for skilled developers designing with TI products. You are solely responsible for (1) selecting the appropriate TI products for your application, (2) designing, validating and testing your application, and (3) ensuring your application meets applicable standards, and any other safety, security, regulatory or other requirements.

These resources are subject to change without notice. TI grants you permission to use these resources only for development of an application that uses the TI products described in the resource. Other reproduction and display of these resources is prohibited. No license is granted to any other TI intellectual property right or to any third party intellectual property right. TI disclaims responsibility for, and you will fully indemnify TI and its representatives against, any claims, damages, costs, losses, and liabilities arising out of your use of these resources.

TI’s products are provided subject to TI’s Terms of Sale or other applicable terms available either on ti.com or provided in conjunction with such TI products. TI’s provision of these resources does not expand or otherwise alter TI’s applicable warranties or warranty disclaimers for TI products.

TI objects to and rejects any additional or different terms you may have proposed.

Mailing Address: Texas Instruments, Post Office Box 655303, Dallas, Texas 75265
Copyright © 2025, Texas Instruments Incorporated