FEATURES

- **Optimized for 1.8-V Operation and Is 3.6-V I/O Tolerant to Support Mixed-Mode Signal Operation**
- **I_{off} Supports Partial-Power-Down Mode Operation**
- **Sub 1-V Operable**
- **Max t_{pd} of 2.1 ns at 1.8 V**
- **Low Power Consumption, 10-μA Max I_{CC}**
- **±8-mA Output Drive at 1.8 V**
- **Latch-Up Performance Exceeds 100 mA Per JESD 78, Class II**
- **ESD Protection Exceeds JESD 22**
  - **2000-V Human-Body Model (A114-A)**
  - **200-V Machine Model (A115-A)**
  - **1500-V Charged-Device Model (C101)**

RGY PACKAGE
(TOP VIEW)

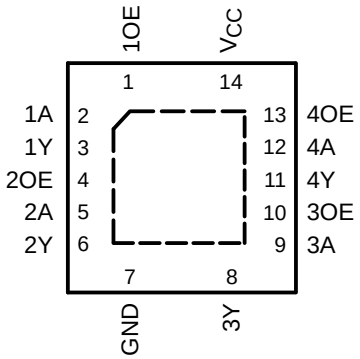

DESCRIPTION/ORDERING INFORMATION

This quadruple bus buffer gate is designed for 0.8-V to 2.7-V V_{CC} operation, but is designed specifically for 1.6-V to 1.95-V V_{CC} operation.

The SN74AUC126 contains four independent line drivers with 3-state outputs. Each output is disabled when the associated output-enable (OE) input is low.

To ensure the high-impedance state during power up or power down, OE should be tied to GND through a pulldown resistor; the minimum value of the resistor is determined by the current-sourcing capability of the driver.

This device is fully specified for partial-power-down applications using I_{off}. The I_{off} circuitry disables the outputs, preventing damaging current backflow through the device when it is powered down.

ORDERING INFORMATION

T_A	PACKAGE(1)		ORDERABLE PART NUMBER	TOP-SIDE MARKING
–40°C to 85°C	QFN – RGY	Tape and reel	SN74AUC126RGYR	MS126

(1) Package drawings, standard packing quantities, thermal data, symbolization, and PCB design guidelines are available at www.ti.com/sc/package.

FUNCTION TABLE

INPUTS		OUTPUT
OE	A	Y
H	H	H
H	L	L
L	X	Z

Please be aware that an important notice concerning availability, standard warranty, and use in critical applications of Texas Instruments semiconductor products and disclaimers thereto appears at the end of this data sheet.

PRODUCTION DATA information is current as of publication date. Products conform to specifications per the terms of the Texas Instruments standard warranty. Production processing does not necessarily include testing of all parameters.

Copyright © 2003–2005, Texas Instruments Incorporated

LOGIC DIAGRAM (POSITIVE LOGIC)

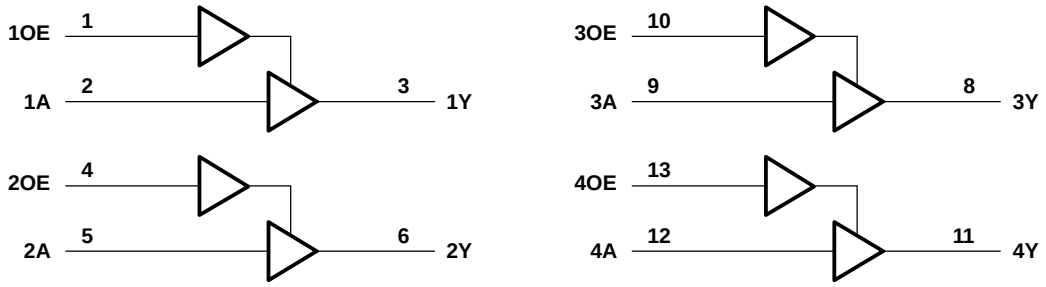

Absolute Maximum Ratings[1]

over operating free-air temperature range (unless otherwise noted)

			MIN	MAX	UNIT
V_{CC}	Supply voltage range		–0.5	3.6	V
V_I	Input voltage range[2]		–0.5	3.6	V
V_O	Voltage range applied to any output in the high-impedance or power-off state[2]		–0.5	3.6	V
V_O	Output voltage range[2]		–0.5	V_{CC} + 0.5	V
I_{IK}	Input clamp current	$V_I < 0$		–50	mA
I_{OK}	Output clamp current	$V_O < 0$		–50	mA
I_O	Continuous output current			±20	mA
	Continuous current through V_{CC} or GND			±100	mA
θ_{JA}	Package thermal impedance[3]			47	°C/W
T_{stg}	Storage temperature range		–65	150	°C

(1) Stresses beyond those listed under "absolute maximum ratings" may cause permanent damage to the device. These are stress ratings only, and functional operation of the device at these or any other conditions beyond those indicated under "recommended operating conditions" is not implied. Exposure to absolute-maximum-rated conditions for extended periods may affect device reliability.
(2) The input negative-voltage and output voltage ratings may be exceeded if the input and output current ratings are observed.
(3) The package thermal impedance is calculated in accordance with JESD 51-5.

Recommended Operating Conditions[(1)]

			MIN	MAX	UNIT
V_{CC}	Supply voltage		0.8	2.7	V
V_{IH}	High-level input voltage	V_{CC} = 0.8 V	V_{CC}		V
		V_{CC} = 1.1 V to 1.95 V	$0.65 \times V_{CC}$		
		V_{CC} = 2.3 V to 2.7 V	1.7		
V_{IL}	Low-level input voltage	V_{CC} = 0.8 V		0	V
		V_{CC} = 1.1 V to 1.95 V		$0.35 \times V_{CC}$	
		V_{CC} = 2.3 V to 2.7 V		0.7	
V_I	Input voltage		0	3.6	V
V_O	Output voltage	Active state	0	V_{CC}	V
		3-state	0	3.6	
I_{OH}	High-level output current	V_{CC} = 0.8 V		–0.7	mA
		V_{CC} = 1.1 V		–3	
		V_{CC} = 1.4 V		–5	
		V_{CC} = 1.65 V		–8	
		V_{CC} = 2.3 V		–9	
I_{OL}	Low-level output current	V_{CC} = 0.8 V		0.7	mA
		V_{CC} = 1.1 V		3	
		V_{CC} = 1.4 V		5	
		V_{CC} = 1.65 V		8	
		V_{CC} = 2.3 V		9	
$\Delta t/\Delta v$	Input transition rise or fall rate			20	ns/V
T_A	Operating free-air temperature		–40	85	°C

(1) All unused inputs of the device must be held at V_{CC} or GND to ensure proper device operation. Refer to the TI application report, *Implications of Slow or Floating CMOS Inputs*, literature number SCBA004.

Electrical Characteristics

over recommended operating free-air temperature range (unless otherwise noted)

PARAMETER	TEST CONDITIONS	V_{CC}	MIN	TYP(1)	MAX	UNIT
V_{OH}	I_{OH} = –100 µA	0.8 V to 2.7 V	V_{CC} – 0.1			V
	I_{OH} = –0.7 mA	0.8 V		0.55		
	I_{OH} = –3 mA	1.1 V	0.8			
	I_{OH} = –5 mA	1.4 V	1			
	I_{OH} = –8 mA	1.65 V	1.2			
	I_{OH} = –9 mA	2.3 V	1.8			
V_{OL}	I_{OL} = 100 µA	0.8 V to 2.7 V			0.2	V
	I_{OL} = 0.7 mA	0.8 V		0.25		
	I_{OL} = 3 mA	1.1 V			0.3	
	I_{OL} = 5 mA	1.4 V			0.4	
	I_{OL} = 8 mA	1.65 V			0.45	
	I_{OL} = 9 mA	2.3 V			0.6	
I_I	V_I = V_{CC} or GND	0 to 2.7 V			±5	µA
I_{off}	V_I or V_O = 2.7 V	0			±10	µA
I_{OZ}	V_O = V_{CC} or GND	2.7 V			±10	µA
I_{CC}	V_I = V_{CC} or GND, I_O = 0	0.8 V to 2.7 V			10	µA
C_i	V_I = V_{CC} or GND	2.5 V		2.5		pF
C_o	V_O = V_{CC} or GND	2.5 V		5		pF

(1) All typical values are at T_A = 25°C.

Switching Characteristics

over recommended operating free-air temperature range, C_L = 15 pF (unless otherwise noted) (see Figure 1)

PARAMETER	FROM (INPUT)	TO (OUTPUT)	V_{CC} = 0.8 V	V_{CC} = 1.2 V ± 0.1 V		V_{CC} = 1.5 V ± 0.1 V		V_{CC} = 1.8 V ± 0.15 V			V_{CC} = 2.5 V ± 0.2 V		UNIT
			TYP	MIN	MAX	MIN	MAX	MIN	TYP	MAX	MIN	MAX	
t_{pd}	A	Y	5.8	0.7	3.7	0.6	2.6	0.5	1	2.1	0.5	1.3	ns
t_{en}	OE	Y	6.2	0.9	3.8	0.7	2.5	0.6	1	2.2	0.6	1.3	ns
t_{dis}	OE	Y	4.3	1.6	4.7	1.5	3.5	1.4	2.4	3.4	1	2.5	ns

Switching Characteristics

over recommended operating free-air temperature range, C_L = 30 pF (unless otherwise noted) (see Figure 1)

PARAMETER	FROM (INPUT)	TO (OUTPUT)	V_{CC} = 1.8 V ± 0.15 V			V_{CC} = 2.5 V ± 0.2 V		UNIT
			MIN	TYP	MAX	MIN	MAX	
t_{pd}	A	Y	0.5	1.8	2.6	0.5	2.1	ns
t_{en}	OE	Y	0.6	1.6	2.7	0.6	2.2	ns
t_{dis}	OE	Y	1.2	2.4	3.3	0.8	2.2	ns

Operating Characteristics

T_A = 25°C

PARAMETER			TEST CONDITIONS	V_{CC} = 0.8 V	V_{CC} = 1.2 V	V_{CC} = 1.5 V	V_{CC} = 1.8 V	V_{CC} = 2.5 V	UNIT
				TYP	TYP	TYP	TYP	TYP	
C_{pd}	Power dissipation capacitance	Outputs enabled	f = 10 MHz	15	15	15	16	17	pF
		Outputs disabled		2	2	2	3	4	

PARAMETER MEASUREMENT INFORMATION

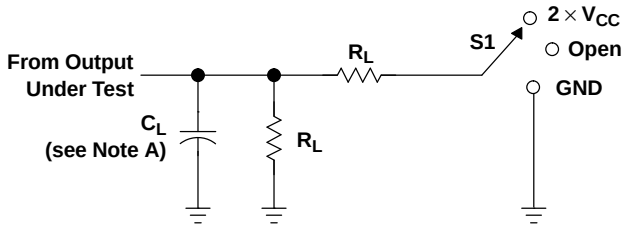

LOAD CIRCUIT

TEST	S1
t_{PLH}/t_{PHL}	Open
t_{PLZ}/t_{PZL}	$2 \times V_{CC}$
t_{PHZ}/t_{PZH}	GND

V_{CC}	C_L	R_L	V_Δ
0.8 V	15 pF	2 kΩ	0.1 V
1.2 V ± 0.1 V	15 pF	2 kΩ	0.1 V
1.5 V ± 0.1 V	15 pF	2 kΩ	0.1 V
1.8 V ± 0.15 V	15 pF	2 kΩ	0.15 V
2.5 V ± 0.2 V	15 pF	2 kΩ	0.15 V
1.8 V ± 0.15 V	30 pF	1 kΩ	0.15 V
2.5 V ± 0.2 V	30 pF	500 Ω	0.15 V

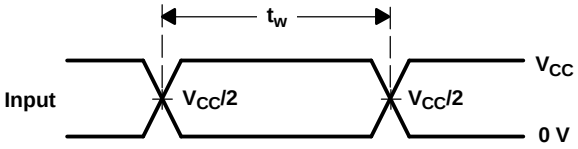

VOLTAGE WAVEFORMS
PULSE DURATION

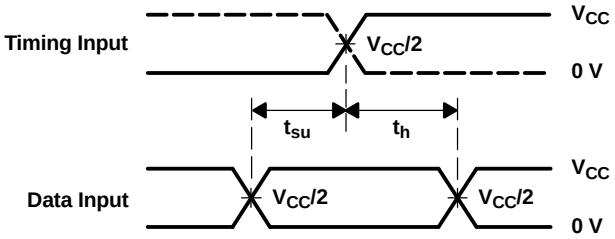

VOLTAGE WAVEFORMS
SETUP AND HOLD TIMES

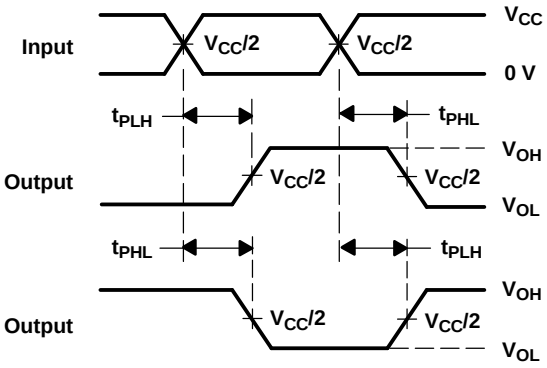

VOLTAGE WAVEFORMS
PROPAGATION DELAY TIMES
INVERTING AND NONINVERTING OUTPUTS

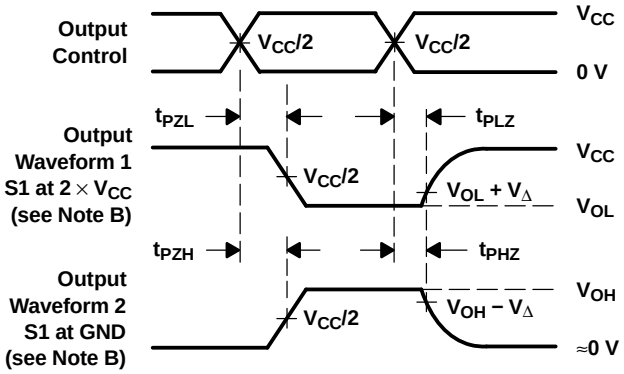

VOLTAGE WAVEFORMS
ENABLE AND DISABLE TIMES
LOW- AND HIGH-LEVEL ENABLING

NOTES:
A. C_L includes probe and jig capacitance.
B. Waveform 1 is for an output with internal conditions such that the output is low, except when disabled by the output control. Waveform 2 is for an output with internal conditions such that the output is high, except when disabled by the output control.
C. All input pulses are supplied by generators having the following characteristics: PRR ≤ 10 MHz, Z_O = 50 Ω, slew rate ≥ 1 V/ns.
D. The outputs are measured one at a time, with one transition per measurement.
E. t_{PLZ} and t_{PHZ} are the same as t_{dis}.
F. t_{PZL} and t_{PZH} are the same as t_{en}.
G. t_{PLH} and t_{PHL} are the same as t_{pd}.
H. All parameters and waveforms are not applicable to all devices.

Figure 1. Load Circuit and Voltage Waveforms

PACKAGING INFORMATION

Orderable part number	Status (1)	Material type (2)	Package | Pins	Package qty | Carrier	RoHS (3)	Lead finish/ Ball material (4)	MSL rating/ Peak reflow (5)	Op temp (°C)	Part marking (6)
SN74AUC126RGYR	Active	Production	VQFN (RGY) | 14	3000 | LARGE T&R	Yes	NIPDAU	Level-2-260C-1 YEAR	-40 to 85	MS126
SN74AUC126RGYR.B	Active	Production	VQFN (RGY) | 14	3000 | LARGE T&R	Yes	NIPDAU	Level-2-260C-1 YEAR	-40 to 85	MS126

(1) **Status:** For more details on status, see our product life cycle.

(2) **Material type:** When designated, preproduction parts are prototypes/experimental devices, and are not yet approved or released for full production. Testing and final process, including without limitation quality assurance, reliability performance testing, and/or process qualification, may not yet be complete, and this item is subject to further changes or possible discontinuation. If available for ordering, purchases will be subject to an additional waiver at checkout, and are intended for early internal evaluation purposes only. These items are sold without warranties of any kind.

(3) **RoHS values:** Yes, No, RoHS Exempt. See the TI RoHS Statement for additional information and value definition.

(4) **Lead finish/Ball material:** Parts may have multiple material finish options. Finish options are separated by a vertical ruled line. Lead finish/Ball material values may wrap to two lines if the finish value exceeds the maximum column width.

(5) **MSL rating/Peak reflow:** The moisture sensitivity level ratings and peak solder (reflow) temperatures. In the event that a part has multiple moisture sensitivity ratings, only the lowest level per JEDEC standards is shown. Refer to the shipping label for the actual reflow temperature that will be used to mount the part to the printed circuit board.

(6) **Part marking:** There may be an additional marking, which relates to the logo, the lot trace code information, or the environmental category of the part.

Multiple part markings will be inside parentheses. Only one part marking contained in parentheses and separated by a "~" will appear on a part. If a line is indented then it is a continuation of the previous line and the two combined represent the entire part marking for that device.

Important Information and Disclaimer: The information provided on this page represents TI's knowledge and belief as of the date that it is provided. TI bases its knowledge and belief on information provided by third parties, and makes no representation or warranty as to the accuracy of such information. Efforts are underway to better integrate information from third parties. TI has taken and continues to take reasonable steps to provide representative and accurate information but may not have conducted destructive testing or chemical analysis on incoming materials and chemicals. TI and TI suppliers consider certain information to be proprietary, and thus CAS numbers and other limited information may not be available for release.

In no event shall TI's liability arising out of such information exceed the total purchase price of the TI part(s) at issue in this document sold by TI to Customer on an annual basis.

TAPE AND REEL INFORMATION

REEL DIMENSIONS

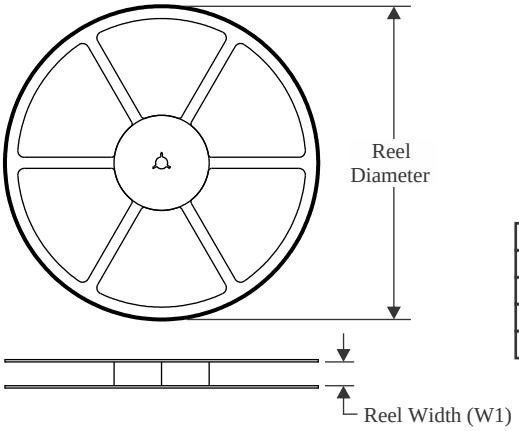

TAPE DIMENSIONS

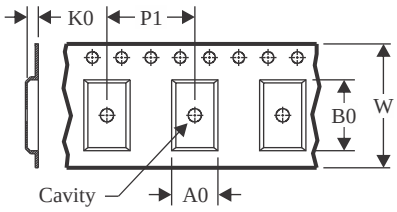

A0	Dimension designed to accommodate the component width
B0	Dimension designed to accommodate the component length
K0	Dimension designed to accommodate the component thickness
W	Overall width of the carrier tape
P1	Pitch between successive cavity centers

QUADRANT ASSIGNMENTS FOR PIN 1 ORIENTATION IN TAPE

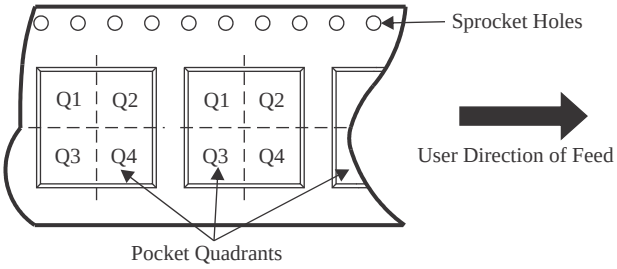

*All dimensions are nominal

Device	Package Type	Package Drawing	Pins	SPQ	Reel Diameter (mm)	Reel Width W1 (mm)	A0 (mm)	B0 (mm)	K0 (mm)	P1 (mm)	W (mm)	Pin1 Quadrant
SN74AUC126RGYR	VQFN	RGY	14	3000	330.0	12.4	3.75	3.75	1.15	8.0	12.0	Q1

TAPE AND REEL BOX DIMENSIONS

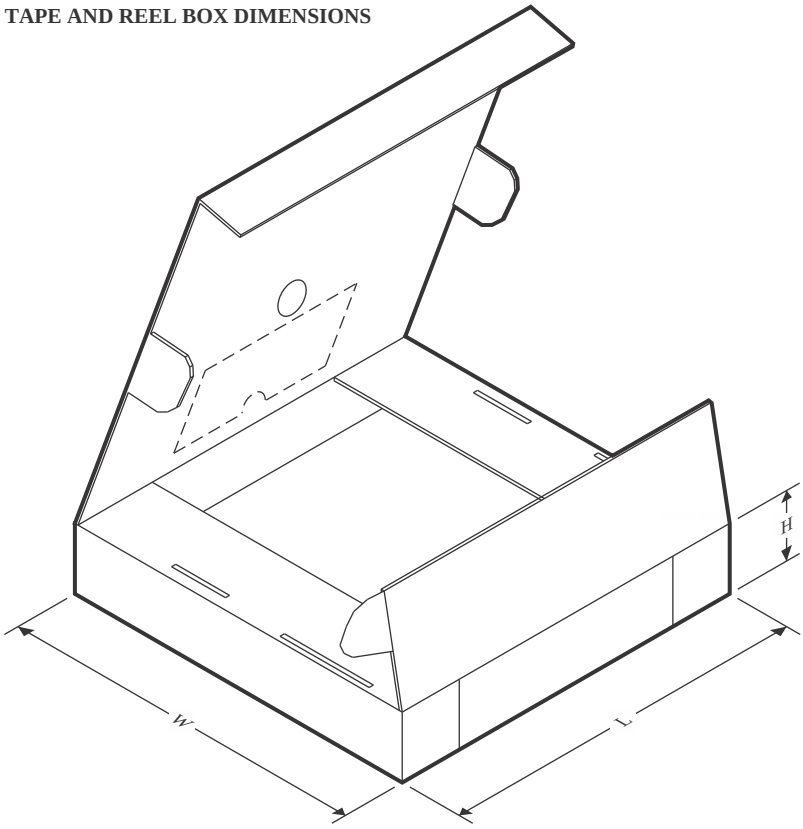

*All dimensions are nominal

Device	Package Type	Package Drawing	Pins	SPQ	Length (mm)	Width (mm)	Height (mm)
SN74AUC126RGYR	VQFN	RGY	14	3000	356.0	356.0	35.0

GENERIC PACKAGE VIEW

RGY 14

VQFN - 1 mm max height

3.5 x 3.5, 0.5 mm pitch

PLASTIC QUAD FLATPACK - NO LEAD

This image is a representation of the package family, actual package may vary.
Refer to the product data sheet for package details.

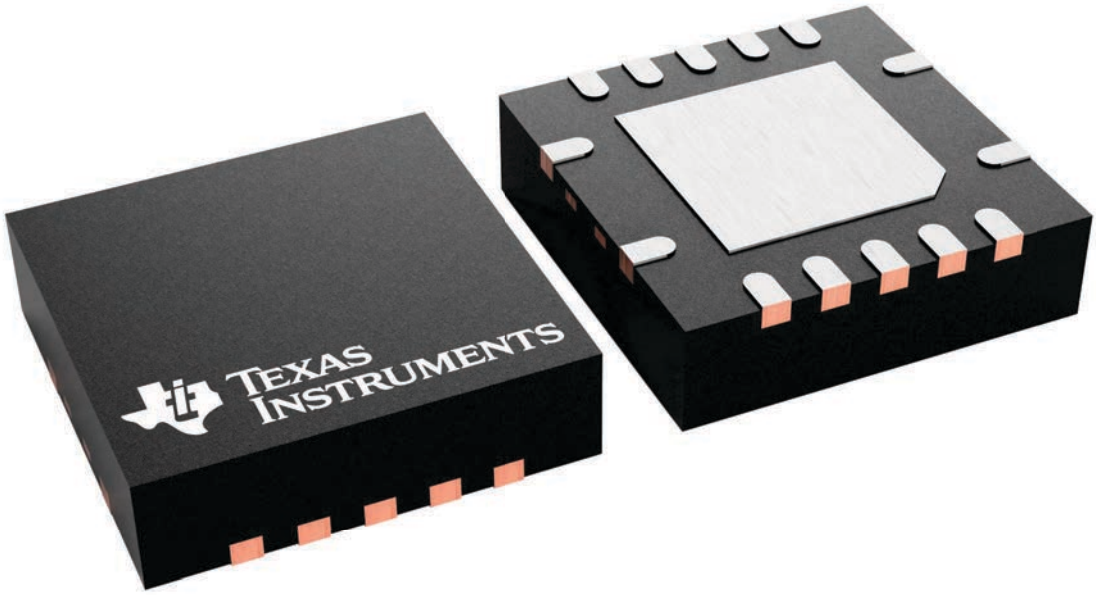

4231541/A

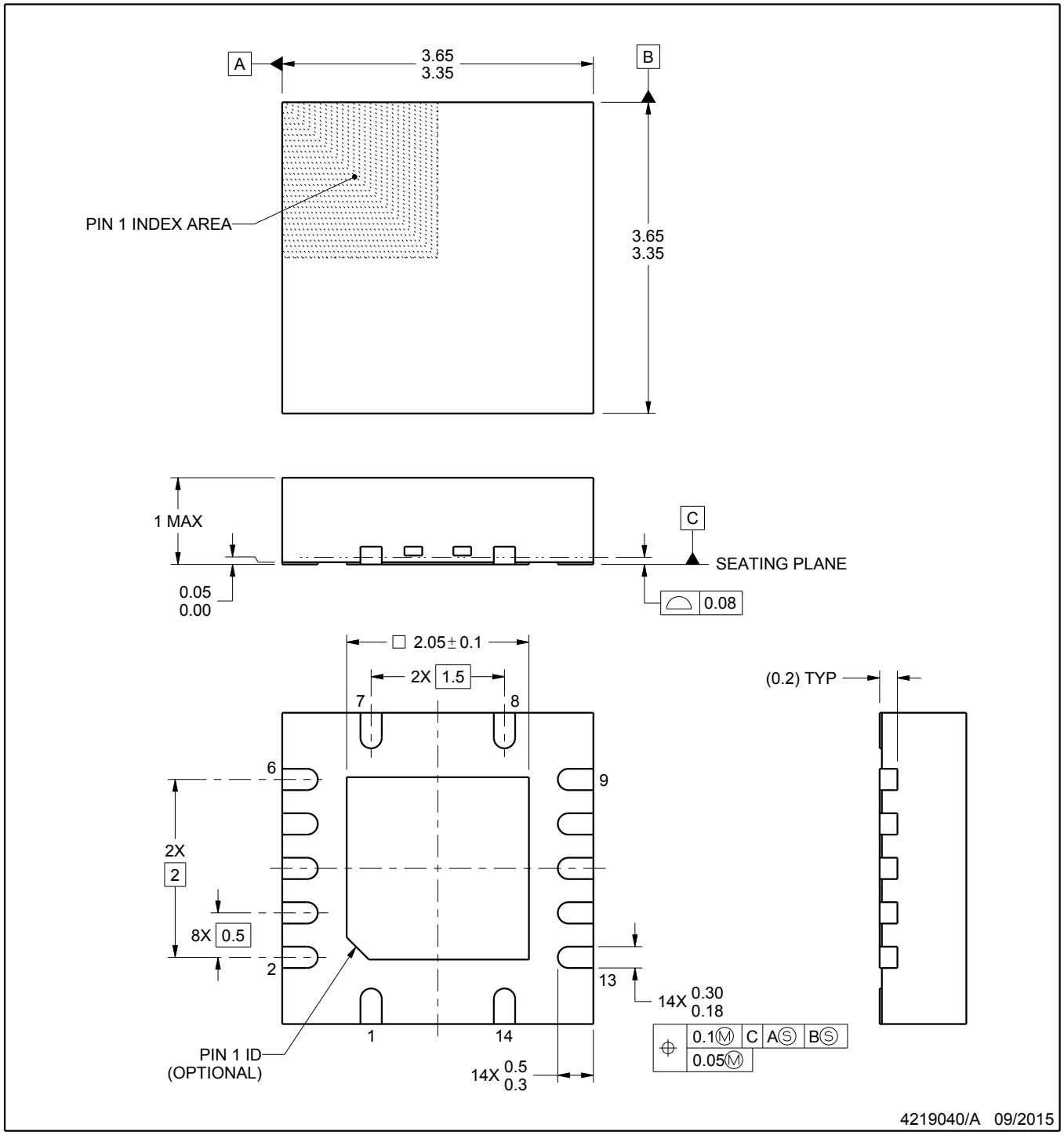

NOTES:

1. All linear dimensions are in millimeters. Any dimensions in parenthesis are for reference only. Dimensioning and tolerancing per ASME Y14.5M.
2. This drawing is subject to change without notice.
3. The package thermal pad must be soldered to the printed circuit board for thermal and mechanical performance.

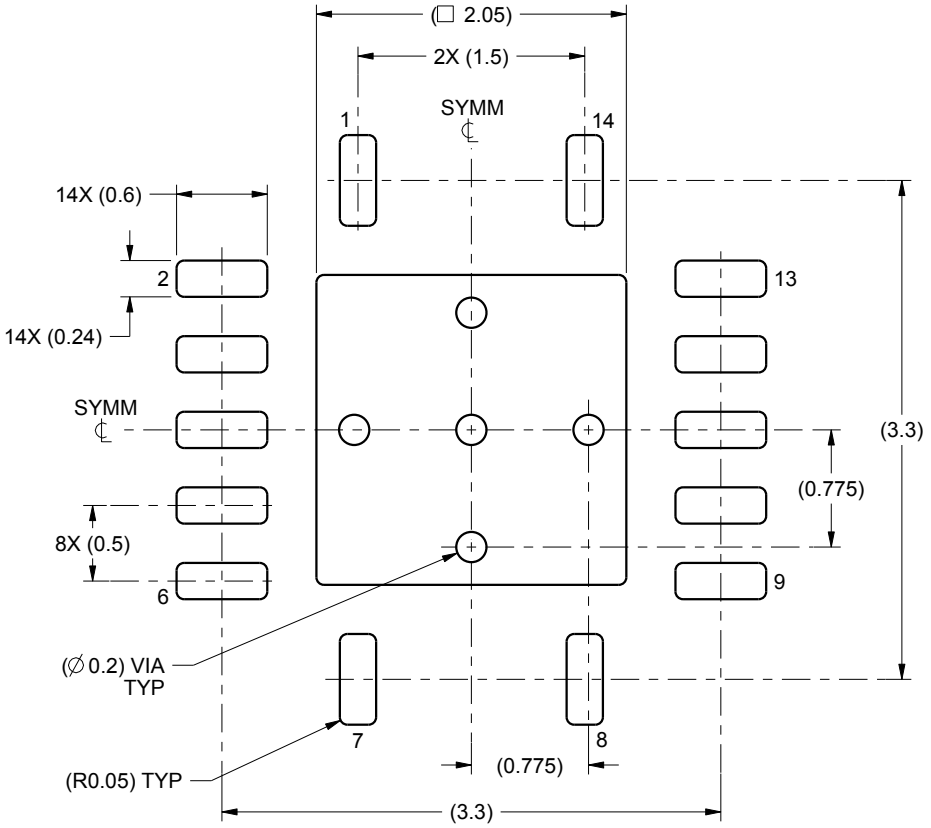

LAND PATTERN EXAMPLE
SCALE:20X

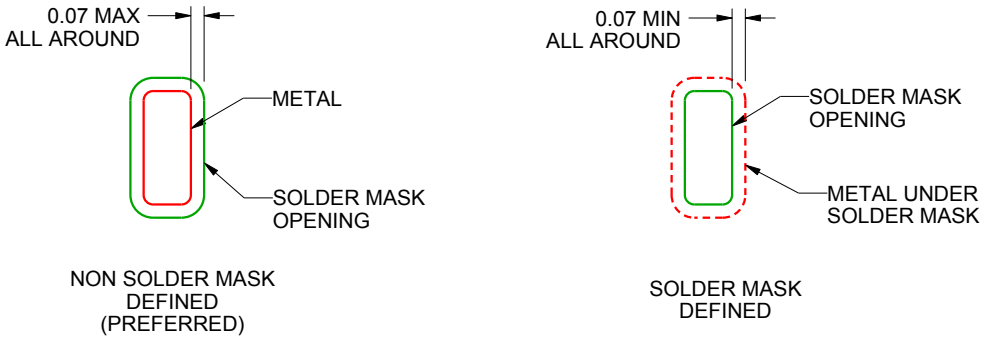

SOLDER MASK DETAILS

4219040/A 09/2015

NOTES: (continued)

4. This package is designed to be soldered to a thermal pad on the board. For more information, see Texas Instruments literature number SLUA271 (www.ti.com/lit/slua271).

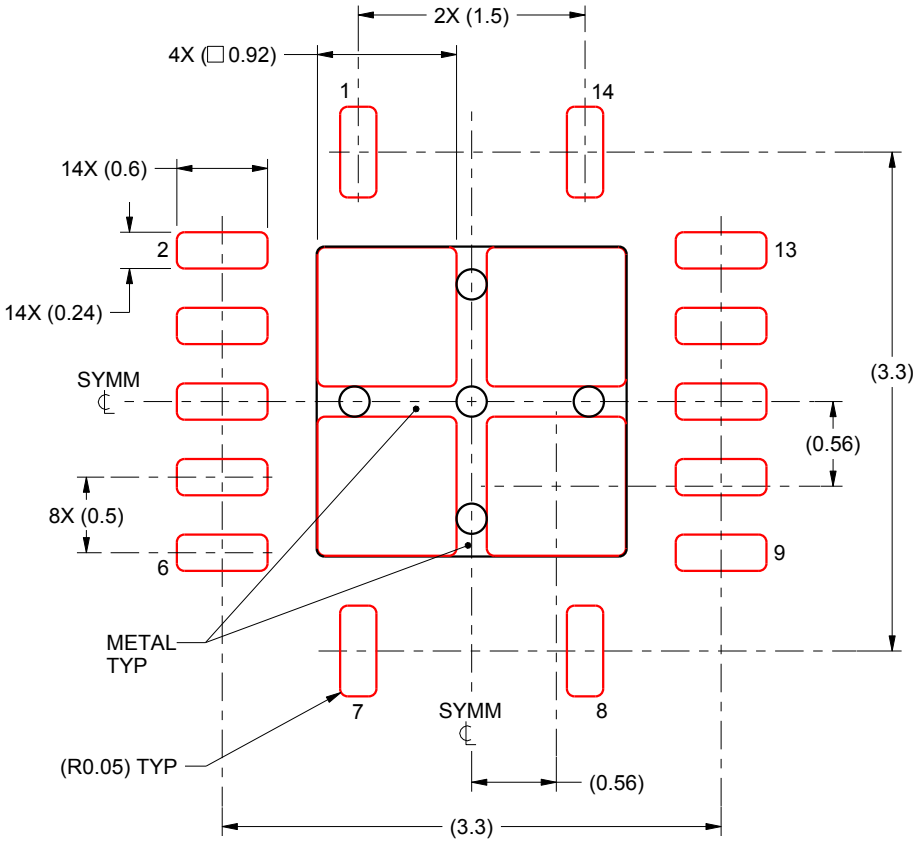

SOLDER PASTE EXAMPLE
BASED ON 0.125 mm THICK STENCIL

EXPOSED PAD
80% PRINTED SOLDER COVERAGE BY AREA
SCALE:20X

4219040/A 09/2015

NOTES: (continued)

5. Laser cutting apertures with trapezoidal walls and rounded corners may offer better paste release. IPC-7525 may have alternate design recommendations.

IMPORTANT NOTICE AND DISCLAIMER

TI PROVIDES TECHNICAL AND RELIABILITY DATA (INCLUDING DATA SHEETS), DESIGN RESOURCES (INCLUDING REFERENCE DESIGNS), APPLICATION OR OTHER DESIGN ADVICE, WEB TOOLS, SAFETY INFORMATION, AND OTHER RESOURCES “AS IS” AND WITH ALL FAULTS, AND DISCLAIMS ALL WARRANTIES, EXPRESS AND IMPLIED, INCLUDING WITHOUT LIMITATION ANY IMPLIED WARRANTIES OF MERCHANTABILITY, FITNESS FOR A PARTICULAR PURPOSE OR NON-INFRINGEMENT OF THIRD PARTY INTELLECTUAL PROPERTY RIGHTS.

These resources are intended for skilled developers designing with TI products. You are solely responsible for (1) selecting the appropriate TI products for your application, (2) designing, validating and testing your application, and (3) ensuring your application meets applicable standards, and any other safety, security, regulatory or other requirements.

These resources are subject to change without notice. TI grants you permission to use these resources only for development of an application that uses the TI products described in the resource. Other reproduction and display of these resources is prohibited. No license is granted to any other TI intellectual property right or to any third party intellectual property right. TI disclaims responsibility for, and you will fully indemnify TI and its representatives against, any claims, damages, costs, losses, and liabilities arising out of your use of these resources.

TI’s products are provided subject to TI’s Terms of Sale or other applicable terms available either on ti.com or provided in conjunction with such TI products. TI’s provision of these resources does not expand or otherwise alter TI’s applicable warranties or warranty disclaimers for TI products.

TI objects to and rejects any additional or different terms you may have proposed.

Mailing Address: Texas Instruments, Post Office Box 655303, Dallas, Texas 75265
Copyright © 2025, Texas Instruments Incorporated