MC3486 Quadruple Differential Line Receiver with 3-State Outputs

1 Features

- Meets or exceeds the requirements of ANSI standards EIA/TIA-422-B and EIA/TIA-423-B and ITU Recommendations V.10 and V.11
- 3-State, TTL-compatible outputs
- Fast transition times
- Operates from single 5-V supply
- Designed to be interchangeable with Motorola™ MC3486

2 Applications

- Motor drives
- Factory automation and control

3 Description

The MC3486 is a monolithic quadruple differential line receiver designed to meet the specifications of ANSI Standards TIA/EIA-422-B and TIA/EIA-423-B and ITU Recommendations V.10 and V.11. The MC3486 offers four independent differential-input line receivers that have TTL-compatible outputs. The outputs utilize 3-state circuitry to provide a high-impedance state at any output when the appropriate output enable is at a low logic level.

The MC3486 is designed for optimum performance when used with the MC3487 quadruple differential line driver. It is supplied in a 16-pin package and operates from a single 5-V supply.

The MC3486 is characterized for operation from 0°C to 70°C.

Package Information

PART NUMBER	PACKAGE(1)	PACKAGE SIZE(2)
MC3486	D (SOIC, 16)	19.3 × 9.4 mm
	N (PDIP, 16)	19.3 × 9.4 mm
	NS (SOP, 16)	10.2 mm × 7.8 mm

(1) For more information, see Section 10.
(2) The package size (length × width) is a nominal value and includes pins, where applicable.

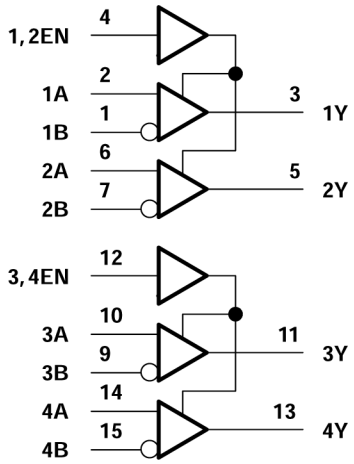

Logic Diagram (Positive Logic)

An IMPORTANT NOTICE at the end of this data sheet addresses availability, warranty, changes, use in safety-critical applications, intellectual property matters and other important disclaimers. PRODUCTION DATA.

Table of Contents

1 Features.....1
2 Applications.....1
3 Description.....1
4 Pin Configuration and Functions.....3
5 Specifications.....4
5.1 Absolute Maximum Ratings.....4
5.2 Recommended Operating Conditions.....4
5.3 Thermal Resistance Characteristics.....4
5.4 Electrical Characteristics.....5
5.5 Switching Characteristics.....5
6 Parameter Measurement Information.....6
7 Detailed Description.....8
7.1 Device Functional Modes.....8
8 Device and Documentation Support.....9
8.1 Receiving Notification of Documentation Updates.....9
8.2 Support Resources.....9
8.3 Trademarks.....9
8.4 Electrostatic Discharge Caution.....9
8.5 Glossary.....9
9 Revision History.....9
10 Mechanical, Packaging, and Orderable Information.....9

Copyright © 2023 Texas Instruments Incorporated

4 Pin Configuration and Functions

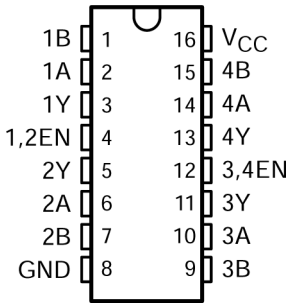

Figure 4-1. D, N, or NS Package (Top View)

Table 4-1. Pin Functions

PIN		TYPE[(1)]	DESCRIPTION
NAME	NO.		
1B	1	I	Channel 1 Differential Receiver Inverting Input
1A	2	I	Channel 1 Differential Receiver Non-Inverting Input
1Y	3	O	Channel 1 Single Ended Output
1,2 EN	4	I	Active High Enable for Channels 1 and 2
2Y	5	O	Channel 2 Single Ended Output
2A	6	I	Channel 2 Differential Receiver Non-Inverting Input
2B	7	I	Channel 2 Differential Receiver Inverting Input
GND	8	GND	Device GND
3B	9	I	Channel 3 Differential Receiver Inverting Input
3A	10	I	Channel 3 Differential Receiver Non-Inverting Input
3Y	11	O	Channel 3 Single Ended Output
3,4 EN	12	I	Active High Enable for Channels 3 and 4
4Y	13	O	Channel 4 Single Ended Output
4A	14	I	Channel 4 Differential Receiver Non-Inverting Input
4B	15	I	Channel 4 Differential Receiver Inverting Input
V_{CC}	16	PWR	Device VCC (4.75 V to 5.25 V)

(1) Signal Types: I = Input, O = Output, I/O = Input or Output.

Copyright © 2023 Texas Instruments Incorporated

5 Specifications

5.1 Absolute Maximum Ratings

over operating free-air temperature range (unless otherwise noted)[1]

		MIN	MAX	UNIT
V_I	Input voltage (A or B inputs)		±15	V
V_{ID} (see [2])	Differential input voltage		±25	V
	Enable input voltage		8	V
I_{OL}	Low-level output current		50	mA
	Lead temperature 1,6 mm (1/16 inch) from case for 10 seconds		260	°C
T_{stg}	Storage temperature range	–65	150	°C

(1) Stresses beyond those listed under “absolute maximum ratings” may cause permanent damage to the device. These are stress ratings only, and functional operation of the device at these or any other conditions beyond those indicated under “recommended operating conditions” is not implied. Exposure to absolute-maximum-rated conditions for extended periods may affect device reliability.
(2) Differential-input voltage is measured at the noninverting input with respect to the corresponding inverting input.

5.2 Recommended Operating Conditions

		MIN	NOM	MAX	UNIT
V_{CC}	Supply voltage	4.75	5	5.25	V
V_{IC}	Common-mode input voltage			±7	V
V_{ID}	Differential input voltage			±6	V
V_{IH}	High-level enable input voltage	2			V
V_{IL}	Low-level enable input voltage			0.8	V
T_A	Operating free-air temperature	0		70	°C

5.3 Thermal Resistance Characteristics

THERMAL METRIC[1]		D (SOIC)	N (PDIP)	NS (SOP)	UNIT
		16-PINS			
$R_{\theta JA}$	Junction-to-ambient thermal resistance	84.6	60.6	88.5	°C/W
$R_{\theta JC(top)}$	Junction-to-case (top) thermal resistance	43.5	48.1	46.2	°C/W
$R_{\theta JB}$	Junction-to-board thermal resistance	43.2	40.6	50.7	°C/W
ψ_{JT}	Junction-to-top characterization parameter	10.4	27.5	13.5	°C/W
ψ_{JB}	Junction-to-board characterization parameter	42.8	40.3	50.3	°C/W
$R_{\theta JC(bot)}$	Junction-to-case (bottom) thermal resistance	n/a	n/a	n/a	°C/W

(1) For more information about traditional and new thermal metrics, see the *Semiconductor and IC package thermal metrics* application report.

Copyright © 2023 Texas Instruments Incorporated

5.4 Electrical Characteristics

over recommended ranges of common-mode input voltage, supply voltage, and operating free-air temperature (unless otherwise noted)

PARAMETER		TEST CONDITIONS			MIN	MAX	UNIT
V_{IT+}	Differential input high-threshold voltage	V_O = 2.7 V,	I_O = -0.4 mA			0.2	V
V_{IT-}	Differential input low-threshold voltage	V_O = 0.5 V,	I_O = -8 mA		- 0.2[(1)]		V
V_{IK}	Enable-input clamp voltage	I_I = -10 mA				-1.5	V
V_{OH}	High-level output voltage	V_{ID} = 0.4 V, See Note 4 and Figure 6-1	I_O = -0.4 mA,		2.7		V
V_{OL}	Low-level output voltage	V_{ID} = - 0.4 V, See Note 4 and Figure 6-1	I_O = 8 mA,			0.5	V
I_{OZ}	High-impedance-state output current	V_{IL} = 0.8 V,	V_{ID} = -3 V,	V_O = 2.7 V		40	μA
		V_{IL} = 0.8 V,	V_{ID} = 3 V,	V_O = 0.5 V		-40	
I_{IB}	Differential-input bias current	V_{CC} = 0 V or 2.25 V, Other inputs at 0 V		V_I = -10 V		-3.25	mA
				V_I = - 3 V		-1.5	
				V_I = 3 V		1.5	
				V_I = 10 V		3.25	
I_{IH}	High-level enable input current	V_I = 2.25 V				100	μA
		V_I = 2.7 V				20	
I_{IL}	Low-level enable input current	V_I = - 0.5 V				-100	μA
I_{OS}	Short-circuit output current	V_{ID} = 3 v,	V_O = 0,	See Note 5	-15	-100	mA
I_{CC}	Supply current	V_{IL} = 0				85	mA

(1) The algebraic convention, in which the least positive (most negative) limit is designated as minimum, is used in this data sheet for threshold voltages only.
(2) Refer to ANSI Standards TIA/EIA-422-B and TIA/EIA-423-B for exact conditions.
(3) Only one output should be shorted at a time.

5.5 Switching Characteristics

V_{CC} = 5 V, C_L = 15 pF, T_A = 25°C

PARAMETER		TEST CONDITIONS	MIN	TYP	MAX	UNIT
t_{PHL}	Propagation delay time, high- to low-level output	See Figure 6-2		28	35	ns
t_{PLH}	Propagation delay time, low- to high-level output			27	30	ns
t_{PZH}	Output enable time to high level	See Figure 6-3		13	30	ns
t_{PZL}	Output enable time to low level			20	30	ns
t_{PHZ}	Output disable time from high level			26	35	ns
t_{PLZ}	Output disable time from low level			27	35	ns

Copyright © 2023 Texas Instruments Incorporated

6 Parameter Measurement Information

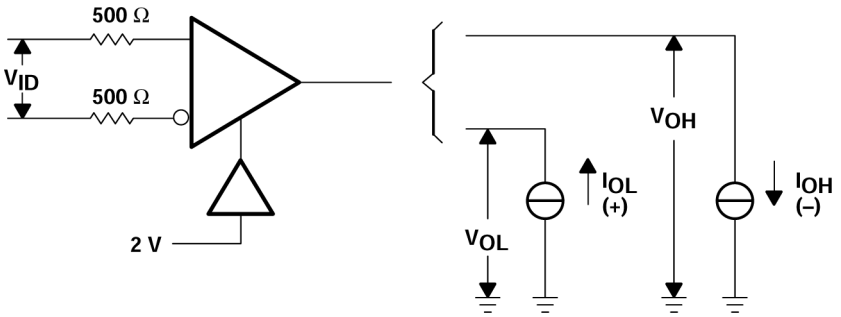

Figure 6-1. V_{OH}, V_{OL}

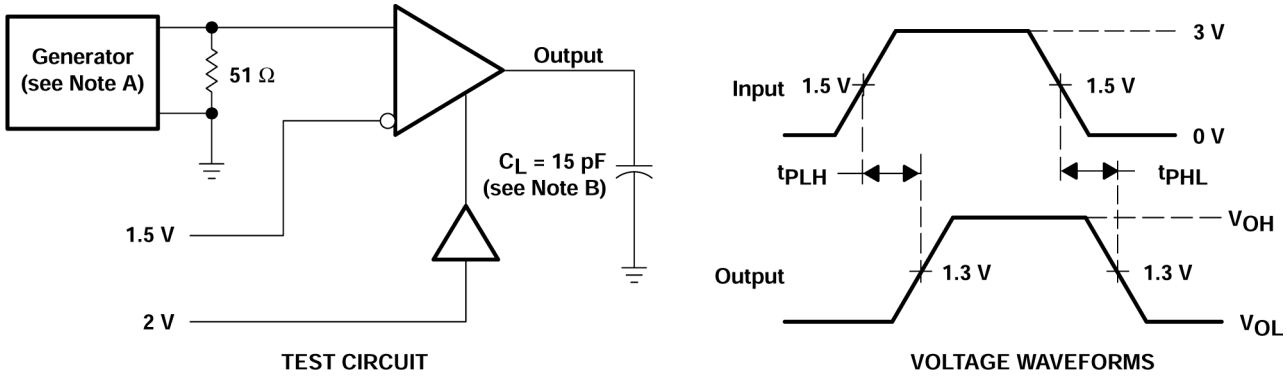

A. The input pulse is supplied by a generator having the following characteristics: PRR ≤ 1 MHz, duty cycle = 50%, t_r ≤ 6 ns, t_f ≤ 6 ns.

B. C_L includes probe and stray capacitance.

Figure 6-2. Test Circuit and Voltage Waveforms

Copyright © 2023 Texas Instruments Incorporated

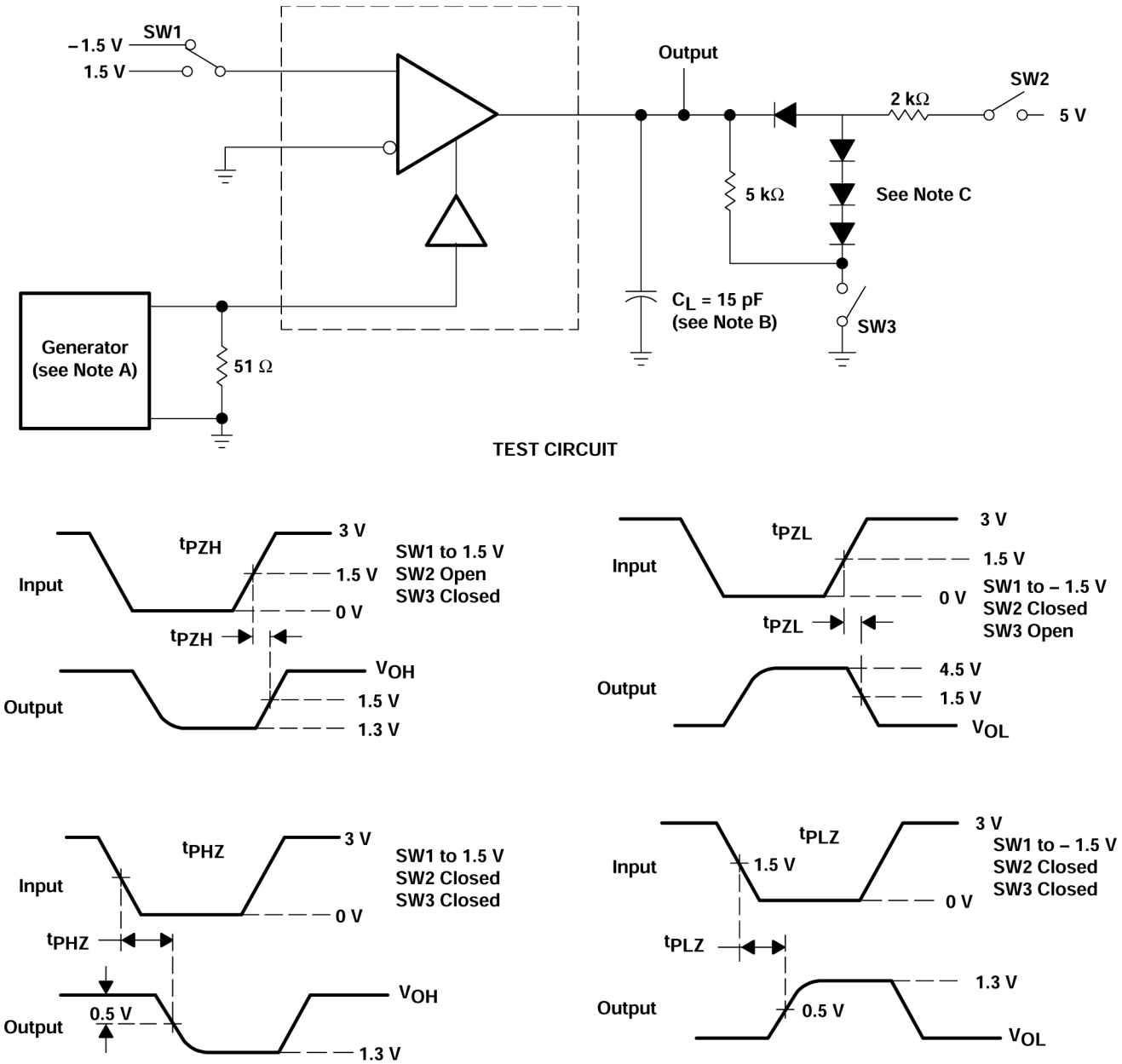

A. The input pulse is supplied by a generator having the following characteristics: PRR ≤ 1 MHz, duty cycle = 50%, t_r ≤ 6 ns, t_f ≤ 6 ns.
B. C_L includes probe and stray capacitance.
C. All diodes are 1N916 or equivalent.

Figure 6-3. Test Circuit and Voltage Waveforms

7 Detailed Description

7.1 Device Functional Modes

Table 7-1. Function Table (Each Receiver)

DIFFERENTIAL INPUTS	ENABLE[(1)]	OUTPUT
A–B		Y
$V_{ID} \leq 0.2$ V	H	H
-0.2 V $< V_{ID} < 0.2$ V	H	?
$V_{ID} \leq -0.2$ V	H	L
Irrelevant	L	Z
Open	H	?

(1) H = high level, L = low level, Z = high impedance (off), ? = indeterminate

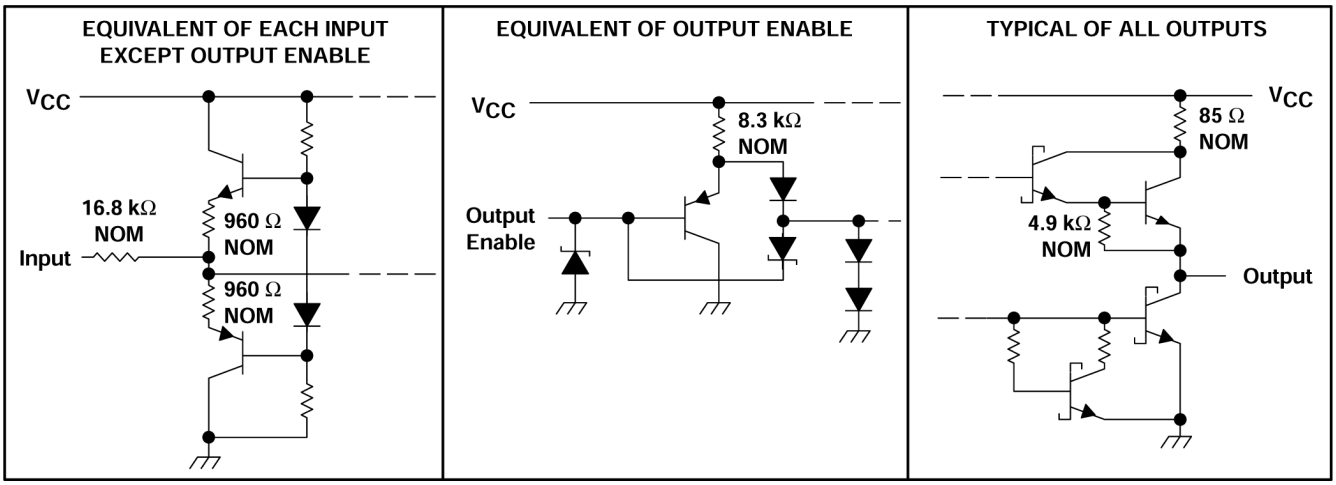

Figure 7-1. Schematics of Inputs and Outputs

Copyright © 2023 Texas Instruments Incorporated

8 Device and Documentation Support

TI offers an extensive line of development tools. Tools and software to evaluate the performance of the device, generate code, and develop solutions are listed below.

8.1 Receiving Notification of Documentation Updates

To receive notification of documentation updates, navigate to the device product folder on ti.com. Click on *Subscribe to updates* to register and receive a weekly digest of any product information that has changed. For change details, review the revision history included in any revised document.

8.2 Support Resources

TI E2E™ support forums are an engineer's go-to source for fast, verified answers and design help — straight from the experts. Search existing answers or ask your own question to get the quick design help you need.

Linked content is provided "AS IS" by the respective contributors. They do not constitute TI specifications and do not necessarily reflect TI's views; see TI's Terms of Use.

8.3 Trademarks

Motorola™ is a trademark of Motorola.
TI E2E™ is a trademark of Texas Instruments.
All trademarks are the property of their respective owners.

8.4 Electrostatic Discharge Caution

This integrated circuit can be damaged by ESD. Texas Instruments recommends that all integrated circuits be handled with appropriate precautions. Failure to observe proper handling and installation procedures can cause damage.

ESD damage can range from subtle performance degradation to complete device failure. Precision integrated circuits may be more susceptible to damage because very small parametric changes could cause the device not to meet its published specifications.

8.5 Glossary

TI Glossary	This glossary lists and explains terms, acronyms, and definitions.

9 Revision History

NOTE: Page numbers for previous revisions may differ from page numbers in the current version.

Changes from Revision C (February 2002) to Revision D (October 2023)	Page
• Changed the numbering format for tables, figures, and cross-references throughout the document	1

10 Mechanical, Packaging, and Orderable Information

The following pages include mechanical, packaging, and orderable information. This information is the most current data available for the designated devices. This data is subject to change without notice and revision of this document. For browser-based versions of this data sheet, refer to the left-hand navigation.

Copyright © 2023 Texas Instruments Incorporated

PACKAGING INFORMATION

Orderable part number	Status (1)	Material type (2)	Package | Pins	Package qty | Carrier	RoHS (3)	Lead finish/ Ball material (4)	MSL rating/ Peak reflow (5)	Op temp (°C)	Part marking (6)
MC3486D	Obsolete	Production	SOIC (D) | 16	-	-	Call TI	Call TI	0 to 70	MC3486
MC3486DR	Active	Production	SOIC (D) | 16	2500 | LARGE T&R	Yes	NIPDAU	Level-1-260C-UNLIM	0 to 70	MC3486
MC3486DR.A	Active	Production	SOIC (D) | 16	2500 | LARGE T&R	Yes	NIPDAU	Level-1-260C-UNLIM	0 to 70	MC3486
MC3486DRE4	Active	Production	SOIC (D) | 16	2500 | LARGE T&R	Yes	NIPDAU	Level-1-260C-UNLIM	0 to 70	MC3486
MC3486N	Active	Production	PDIP (N) | 16	25 | TUBE	Yes	NIPDAU	N/A for Pkg Type	0 to 70	MC3486N
MC3486N.A	Active	Production	PDIP (N) | 16	25 | TUBE	Yes	NIPDAU	N/A for Pkg Type	0 to 70	MC3486N
MC3486NE4	Active	Production	PDIP (N) | 16	25 | TUBE	Yes	NIPDAU	N/A for Pkg Type	0 to 70	MC3486N
MC3486NSR	Active	Production	SOP (NS) | 16	2000 | LARGE T&R	Yes	NIPDAU	Level-1-260C-UNLIM	0 to 70	MC3486
MC3486NSR.A	Active	Production	SOP (NS) | 16	2000 | LARGE T&R	Yes	NIPDAU	Level-1-260C-UNLIM	0 to 70	MC3486

(1) **Status:** For more details on status, see our product life cycle.

(2) **Material type:** When designated, preproduction parts are prototypes/experimental devices, and are not yet approved or released for full production. Testing and final process, including without limitation quality assurance, reliability performance testing, and/or process qualification, may not yet be complete, and this item is subject to further changes or possible discontinuation. If available for ordering, purchases will be subject to an additional waiver at checkout, and are intended for early internal evaluation purposes only. These items are sold without warranties of any kind.

(3) **RoHS values:** Yes, No, RoHS Exempt. See the TI RoHS Statement for additional information and value definition.

(4) **Lead finish/Ball material:** Parts may have multiple material finish options. Finish options are separated by a vertical ruled line. Lead finish/Ball material values may wrap to two lines if the finish value exceeds the maximum column width.

(5) **MSL rating/Peak reflow:** The moisture sensitivity level ratings and peak solder (reflow) temperatures. In the event that a part has multiple moisture sensitivity ratings, only the lowest level per JEDEC standards is shown. Refer to the shipping label for the actual reflow temperature that will be used to mount the part to the printed circuit board.

(6) **Part marking:** There may be an additional marking, which relates to the logo, the lot trace code information, or the environmental category of the part.

Multiple part markings will be inside parentheses. Only one part marking contained in parentheses and separated by a "~" will appear on a part. If a line is indented then it is a continuation of the previous line and the two combined represent the entire part marking for that device.

Important Information and Disclaimer: The information provided on this page represents TI's knowledge and belief as of the date that it is provided. TI bases its knowledge and belief on information provided by third parties, and makes no representation or warranty as to the accuracy of such information. Efforts are underway to better integrate information from third parties. TI has taken and continues to take reasonable steps to provide representative

and accurate information but may not have conducted destructive testing or chemical analysis on incoming materials and chemicals. TI and TI suppliers consider certain information to be proprietary, and thus CAS numbers and other limited information may not be available for release.

In no event shall TI's liability arising out of such information exceed the total purchase price of the TI part(s) at issue in this document sold by TI to Customer on an annual basis.

TAPE AND REEL INFORMATION

REEL DIMENSIONS

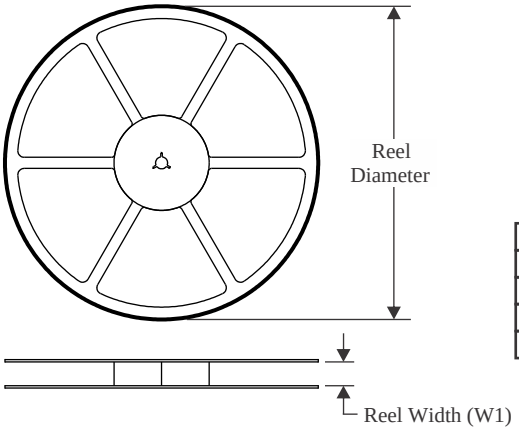

TAPE DIMENSIONS

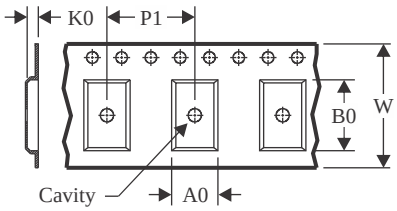

A0	Dimension designed to accommodate the component width
B0	Dimension designed to accommodate the component length
K0	Dimension designed to accommodate the component thickness
W	Overall width of the carrier tape
P1	Pitch between successive cavity centers

QUADRANT ASSIGNMENTS FOR PIN 1 ORIENTATION IN TAPE

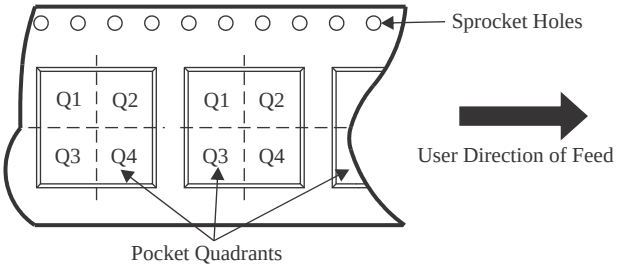

*All dimensions are nominal

Device	Package Type	Package Drawing	Pins	SPQ	Reel Diameter (mm)	Reel Width W1 (mm)	A0 (mm)	B0 (mm)	K0 (mm)	P1 (mm)	W (mm)	Pin1 Quadrant
MC3486DR	SOIC	D	16	2500	330.0	16.4	6.5	10.3	2.1	8.0	16.0	Q1
MC3486NSR	SOP	NS	16	2000	330.0	16.4	8.1	10.4	2.5	12.0	16.0	Q1

TAPE AND REEL BOX DIMENSIONS

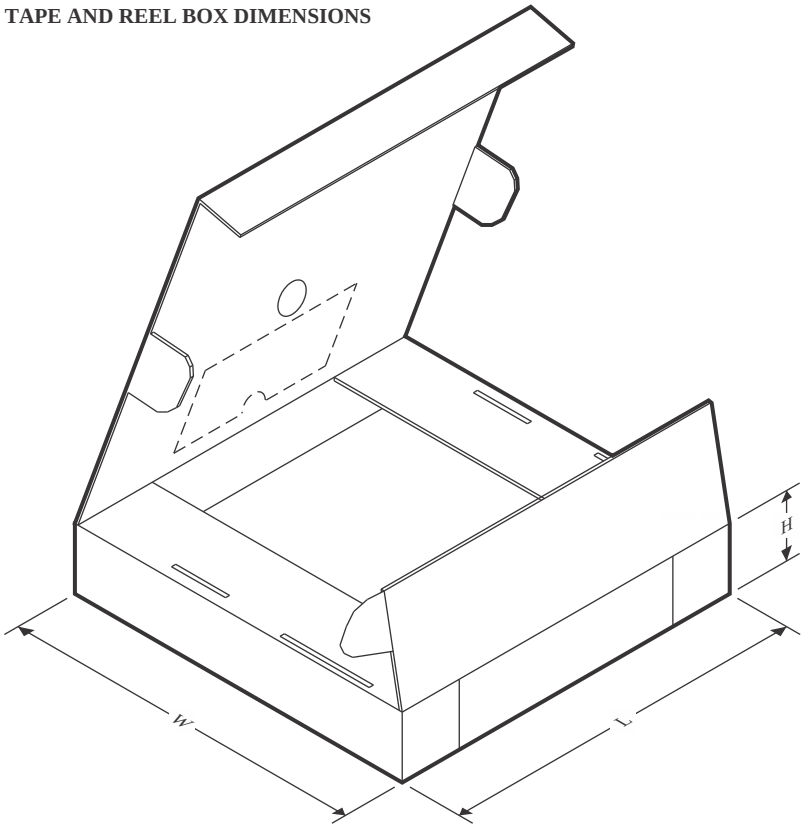

*All dimensions are nominal

Device	Package Type	Package Drawing	Pins	SPQ	Length (mm)	Width (mm)	Height (mm)
MC3486DR	SOIC	D	16	2500	353.0	353.0	32.0
MC3486NSR	SOP	NS	16	2000	356.0	356.0	35.0

TUBE

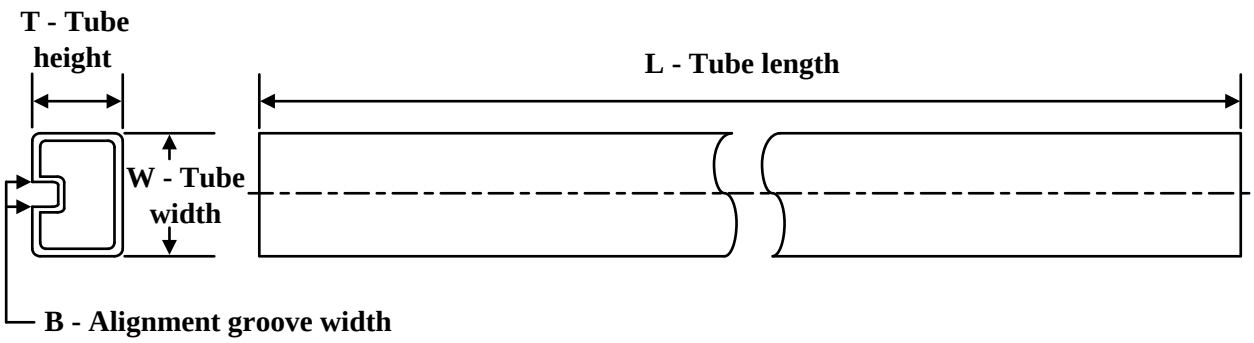

*All dimensions are nominal

Device	Package Name	Package Type	Pins	SPQ	L (mm)	W (mm)	T (µm)	B (mm)
MC3486N	N	PDIP	16	25	506	13.97	11230	4.32
MC3486N	N	PDIP	16	25	506	13.97	11230	4.32
MC3486N.A	N	PDIP	16	25	506	13.97	11230	4.32
MC3486N.A	N	PDIP	16	25	506	13.97	11230	4.32
MC3486NE4	N	PDIP	16	25	506	13.97	11230	4.32
MC3486NE4	N	PDIP	16	25	506	13.97	11230	4.32

N (R–PDIP–T**) PLASTIC DUAL–IN–LINE PACKAGE

16 PINS SHOWN

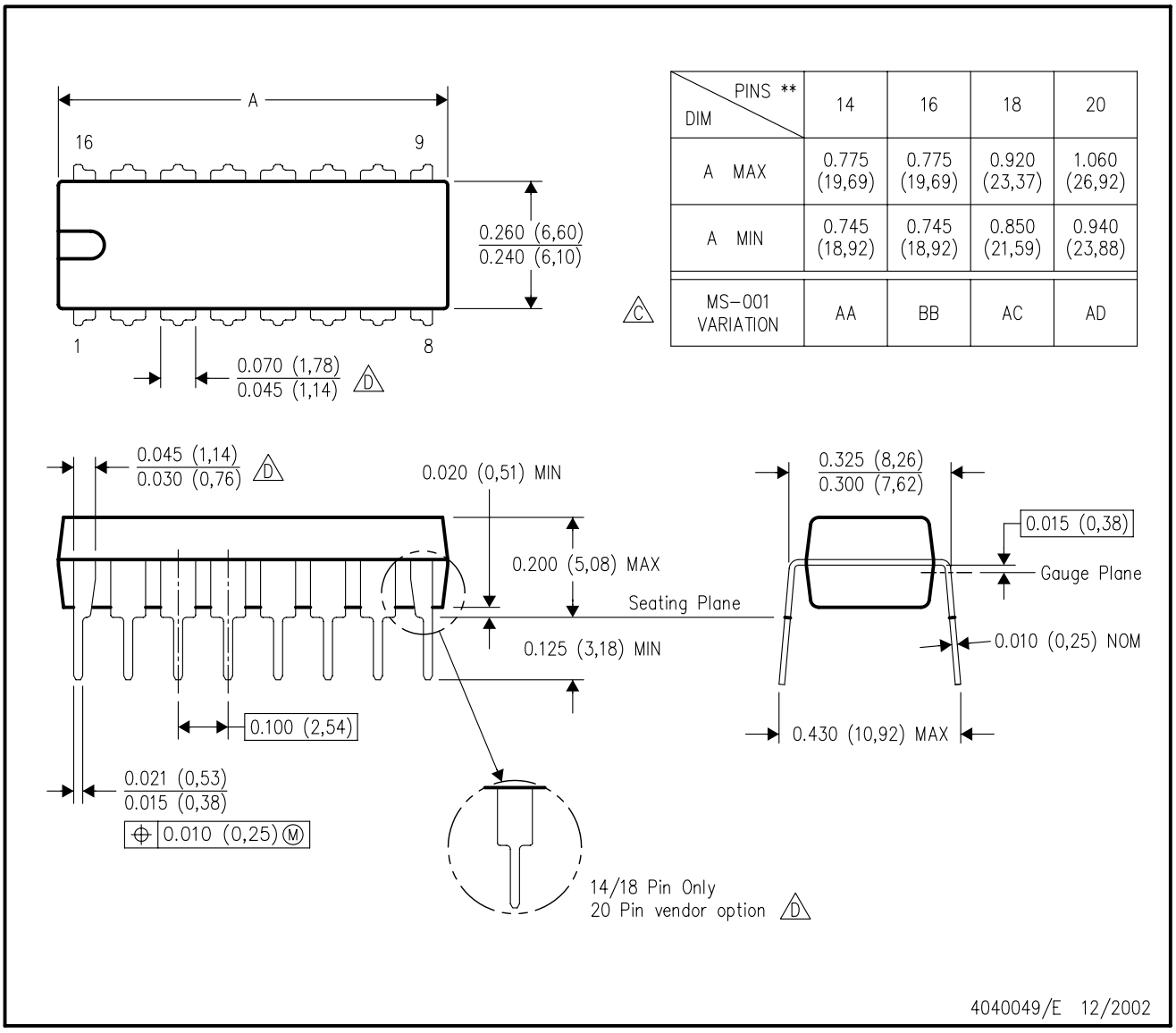

DIM \ PINS **	14	16	18	20
A MAX	0.775 (19,69)	0.775 (19,69)	0.920 (23,37)	1.060 (26,92)
A MIN	0.745 (18,92)	0.745 (18,92)	0.850 (21,59)	0.940 (23,88)
MS–001 VARIATION (C)	AA	BB	AC	AD

NOTES:
A. All linear dimensions are in inches (millimeters).
B. This drawing is subject to change without notice.
C. Falls within JEDEC MS–001, except 18 and 20 pin minimum body length (Dim A).
D. The 20 pin end lead shoulder width is a vendor option, either half or full width.

D (R–PDSO–G16) PLASTIC SMALL OUTLINE

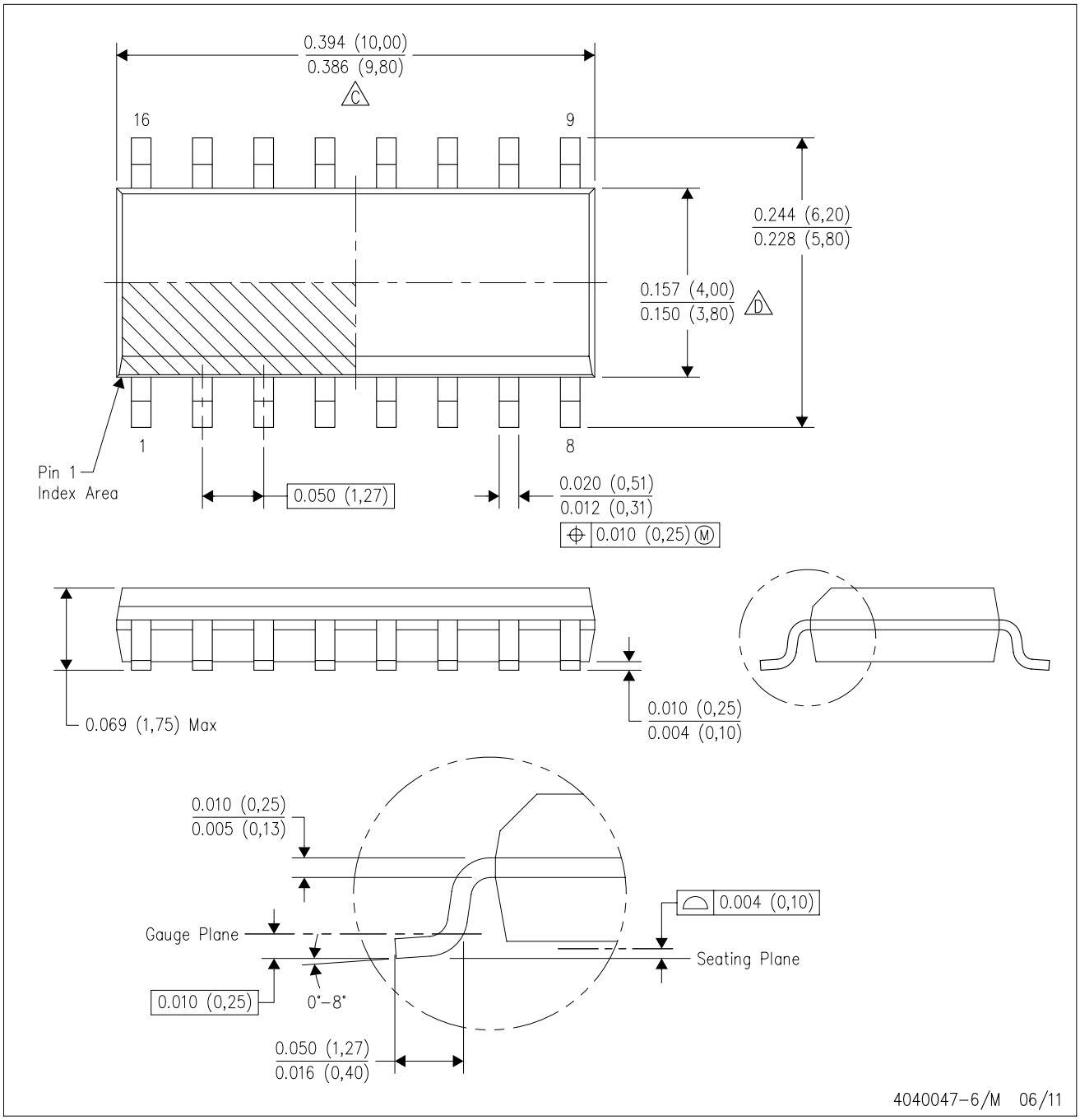

NOTES:
A. All linear dimensions are in inches (millimeters).
B. This drawing is subject to change without notice.
C. Body length does not include mold flash, protrusions, or gate burrs. Mold flash, protrusions, or gate burrs shall not exceed 0.006 (0,15) each side.
D. Body width does not include interlead flash. Interlead flash shall not exceed 0.017 (0,43) each side.
E. Reference JEDEC MS–012 variation AC.

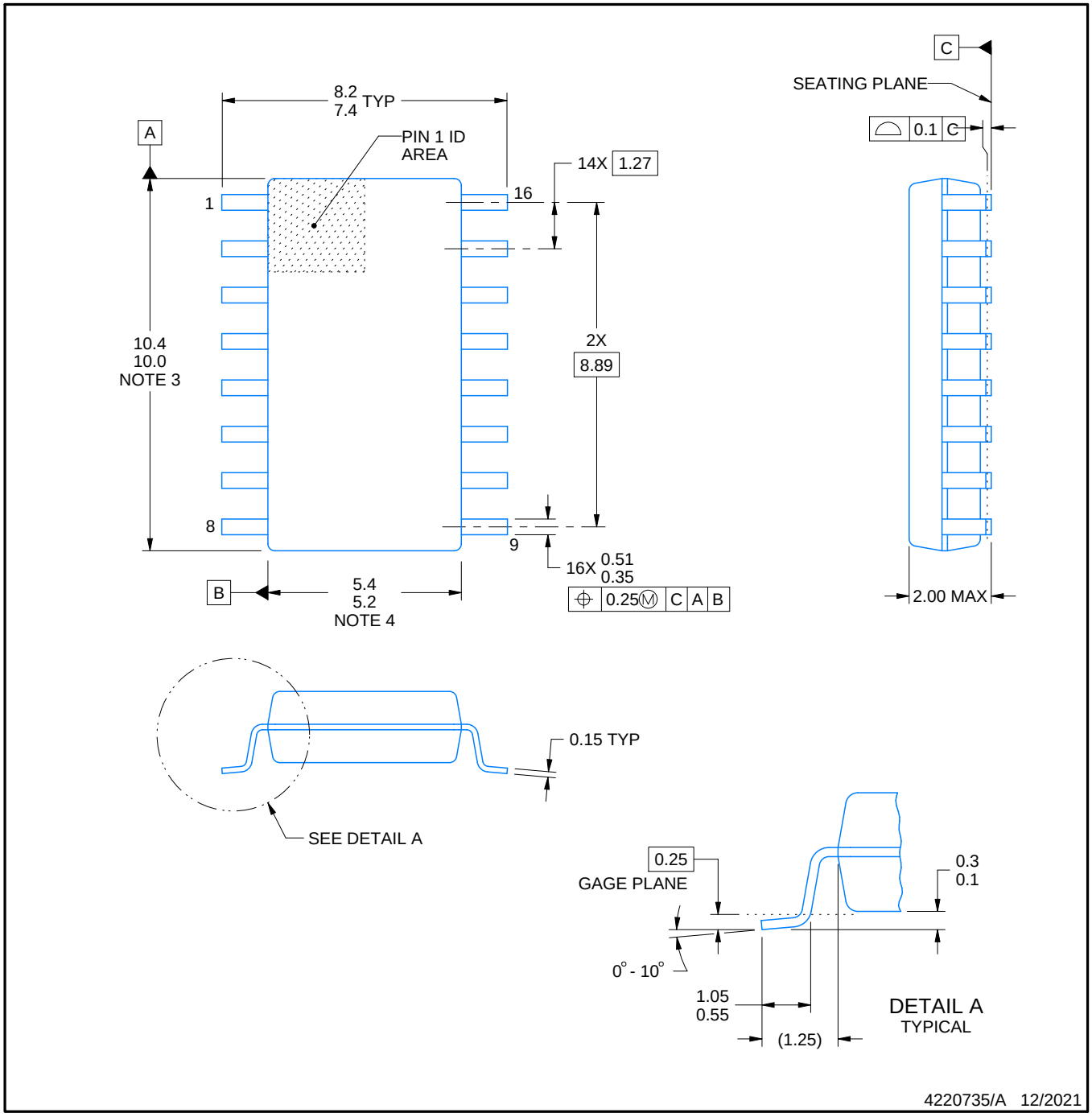

NOTES:

1. All linear dimensions are in millimeters. Dimensions in parenthesis are for reference only. Dimensioning and tolerancing per ASME Y14.5M.
2. This drawing is subject to change without notice.
3. This dimension does not include mold flash, protrusions, or gate burrs. Mold flash, protrusions, or gate burrs shall not exceed 0.15 mm, per side.
4. This dimension does not include interlead flash. Interlead flash shall not exceed 0.25 mm, per side.

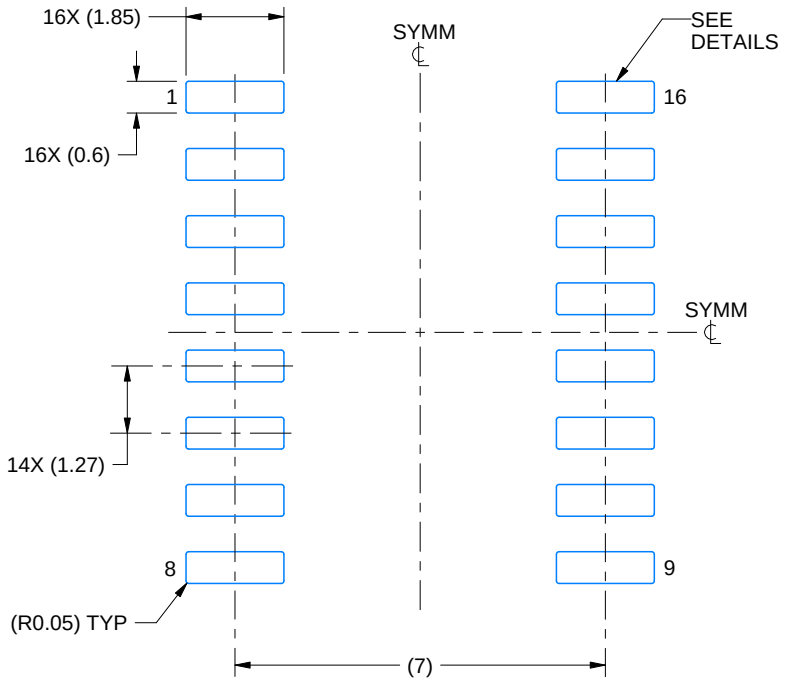

LAND PATTERN EXAMPLE
SCALE:7X

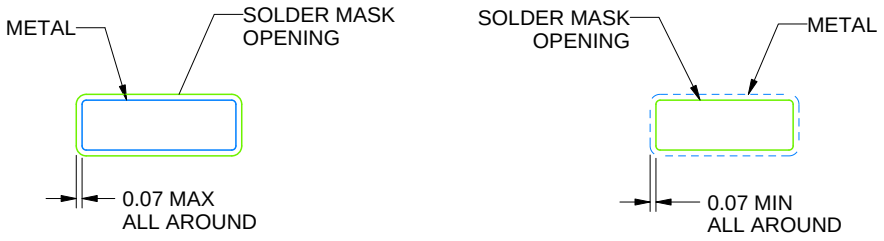

NON SOLDER MASK DEFINED

SOLDER MASK DEFINED

SOLDER MASK DETAILS

4220735/A 12/2021

NOTES: (continued)

5. Publication IPC-7351 may have alternate designs.
6. Solder mask tolerances between and around signal pads can vary based on board fabrication site.

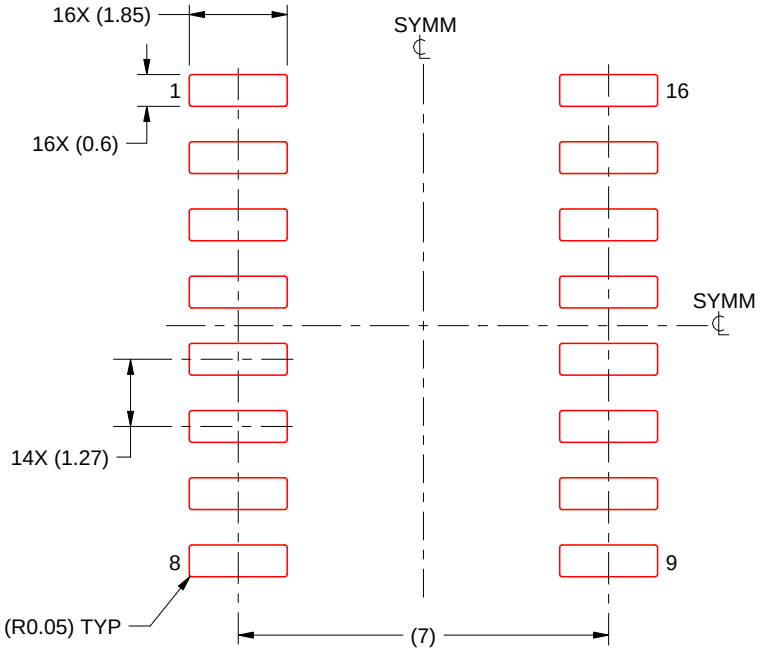

SOLDER PASTE EXAMPLE
BASED ON 0.125 mm THICK STENCIL
SCALE:7X

4220735/A 12/2021

NOTES: (continued)

7. Laser cutting apertures with trapezoidal walls and rounded corners may offer better paste release. IPC-7525 may have alternate design recommendations.
8. Board assembly site may have different recommendations for stencil design.

MECHANICAL DATA

NS (R-PDSO-G)** **PLASTIC SMALL-OUTLINE PACKAGE**

14-PINS SHOWN

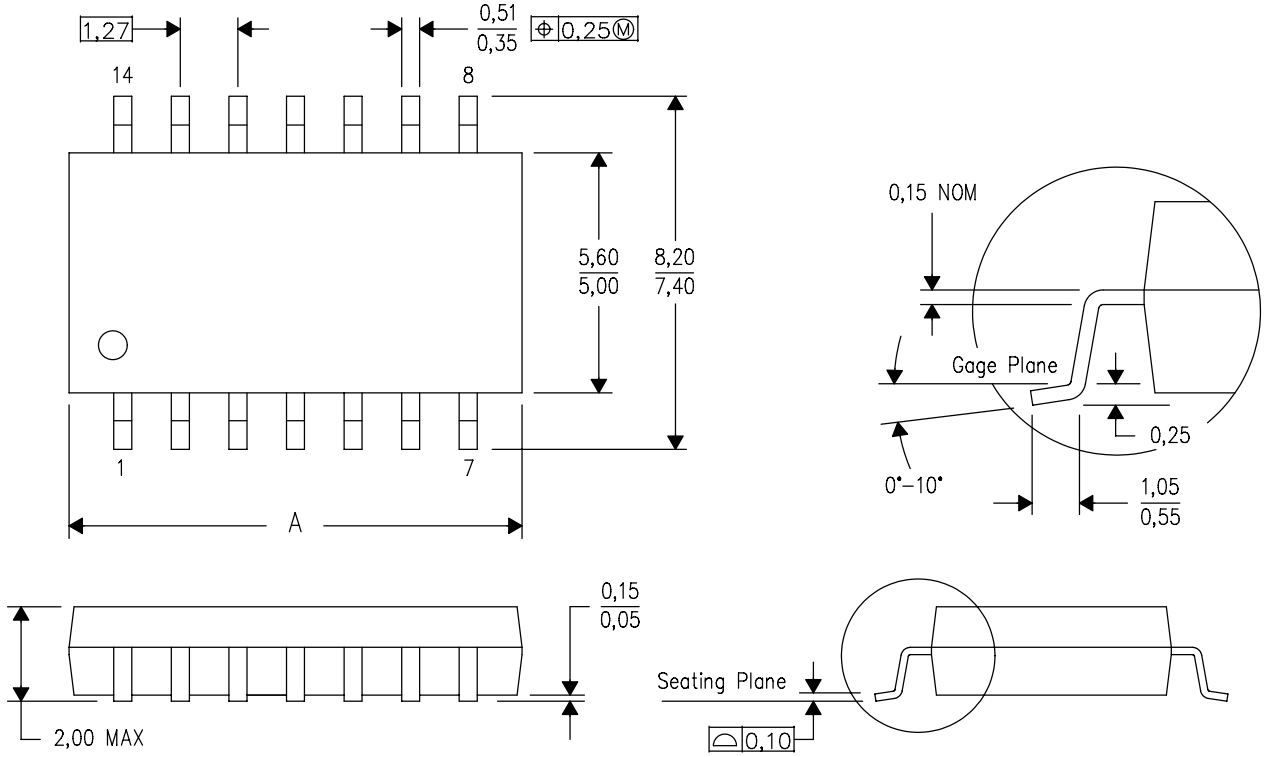

DIM \ PINS **	14	16	20	24
A MAX	10,50	10,50	12,90	15,30
A MIN	9,90	9,90	12,30	14,70

4040062/C 03/03

NOTES:
A. All linear dimensions are in millimeters.
B. This drawing is subject to change without notice.
C. Body dimensions do not include mold flash or protrusion, not to exceed 0,15.

IMPORTANT NOTICE AND DISCLAIMER

TI PROVIDES TECHNICAL AND RELIABILITY DATA (INCLUDING DATA SHEETS), DESIGN RESOURCES (INCLUDING REFERENCE DESIGNS), APPLICATION OR OTHER DESIGN ADVICE, WEB TOOLS, SAFETY INFORMATION, AND OTHER RESOURCES “AS IS” AND WITH ALL FAULTS, AND DISCLAIMS ALL WARRANTIES, EXPRESS AND IMPLIED, INCLUDING WITHOUT LIMITATION ANY IMPLIED WARRANTIES OF MERCHANTABILITY, FITNESS FOR A PARTICULAR PURPOSE OR NON-INFRINGEMENT OF THIRD PARTY INTELLECTUAL PROPERTY RIGHTS.

These resources are intended for skilled developers designing with TI products. You are solely responsible for (1) selecting the appropriate TI products for your application, (2) designing, validating and testing your application, and (3) ensuring your application meets applicable standards, and any other safety, security, regulatory or other requirements.

These resources are subject to change without notice. TI grants you permission to use these resources only for development of an application that uses the TI products described in the resource. Other reproduction and display of these resources is prohibited. No license is granted to any other TI intellectual property right or to any third party intellectual property right. TI disclaims responsibility for, and you will fully indemnify TI and its representatives against, any claims, damages, costs, losses, and liabilities arising out of your use of these resources.

TI’s products are provided subject to TI’s Terms of Sale or other applicable terms available either on ti.com or provided in conjunction with such TI products. TI’s provision of these resources does not expand or otherwise alter TI’s applicable warranties or warranty disclaimers for TI products.

TI objects to and rejects any additional or different terms you may have proposed.

Mailing Address: Texas Instruments, Post Office Box 655303, Dallas, Texas 75265
Copyright © 2025, Texas Instruments Incorporated