# Five/Ten Output Clock Programmable Buffer

**Check for Samples: CDCE18005**

## FEATURES

- **Universal Input Buffers That Accept LVPECL, LVDS, or LVCMOS Level Signaling**
- **Fully Configurable Outputs Including Frequency, Output Format, and Output Skew**
- **Output Multiplexer That Serves as a Clock Switch Between the Three Reference Inputs and the Outputs**
- **Clock Generation Via AT-Cut Crystal**
- **Integrated EEPROM Determines Device Configuration at Power-up**
- **Low Additive Jitter Performance**
- **Universal Output Blocks Support up to 5 Differential, 10 Single-ended, or Combinations of Differential or Single-ended:**
  - **Low Additive Jitter**
  - **Output Frequency up to 1.5 GHz**
  - **LVPECL, LVDS, LVCMOS, and Special High Output Swing Modes**
  - **Independent Output Dividers Support Divide Ratios from 1–80**
  - **Independent limited Coarse Skew Control on all Outputs**
- **Flexible Inputs:**
  - **Two Universal Differential Inputs Accept Frequencies up to 1500 MHz (LVPECL), 800 MHz (LVDS), or 250 MHz (LVCMOS).**
  - **One Auxiliary Input Accepts Crystal. Auxiliary Input Accepts Crystals in the Range of 2 MHz–42 MHz**
  - **Clock Generator Mode Using Crystal Input.**
- **Typical Power Consumption 1W at 3.3V (see Table 28)**
- **Offered in QFN-48 Package**
- **ESD Protection Exceeds 2kV HBM**
- **Industrial Temperature Range –40°C to 85°C**

## APPLICATIONS

- **Data Converter and Data Aggregation Clocking**
- **Wireless Infrastructure**
- **Switches and Routers**
- **Medical Electronics**
- **Military and Aerospace**
- **Industrial**
- **Clock Fan-out**

## DESCRIPTION

The CDCE18005 is a high performance clock distributor featuring a high degree of configurability via a SPI interface, and programmable start up modes determined by on-chip EEPROM. Specifically tailored for buffering clocks for data converters and high-speed digital signals, the CDCE18005 achieves low additive jitter in the 50 fs RMS (1) range. The clock distribution block includes five individually programmable outputs that can be configured to provide different combinations of output formats (LVPECL, LVDS, LVCMOS). Each output can also be programmed to a unique output frequency (up to 1.5 GHz (2) ) and skew relationship via a programmable delay block. If all outputs are configured in single-ended mode (e.g. LVCMOS), the CDCE18005 supports up to ten outputs. Each output can select one of three clock input sources. The input block includes two universal differential inputs which support frequencies up to 1500 MHz and an auxiliary input that can be configured to connect to a crystal via an on chip oscillator block.

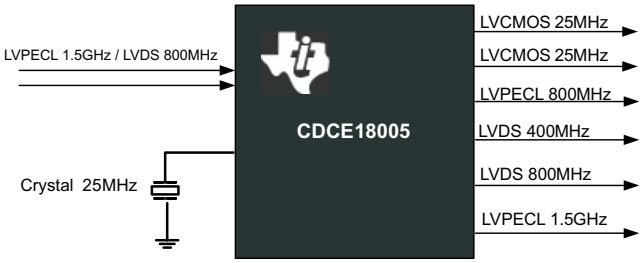


**Figure 1. CDCE18005 Application Example**

(1) 12 kHz to 20 MHz integration bandwidth.
(2) Maximum output frequency depends on the output format selected

Please be aware that an important notice concerning availability, standard warranty, and use in critical applications of Texas Instruments semiconductor products and disclaimers thereto appears at the end of this data sheet.

PRODUCTION DATA information is current as of publication date. Products conform to specifications per the terms of the Texas Instruments standard warranty. Production processing does not necessarily include testing of all parameters.

Copyright © 2008–2012, Texas Instruments Incorporated

# DEVICE INFORMATION

## PACKAGE

The CDCE18005 is packaged in a 48-Pin Plastic Quad Flatpack Package with enhanced bottom thermal pad for heat dissipation. The Texas Instruments Package Designator is: **RGZ (S-PQFP-N48)**

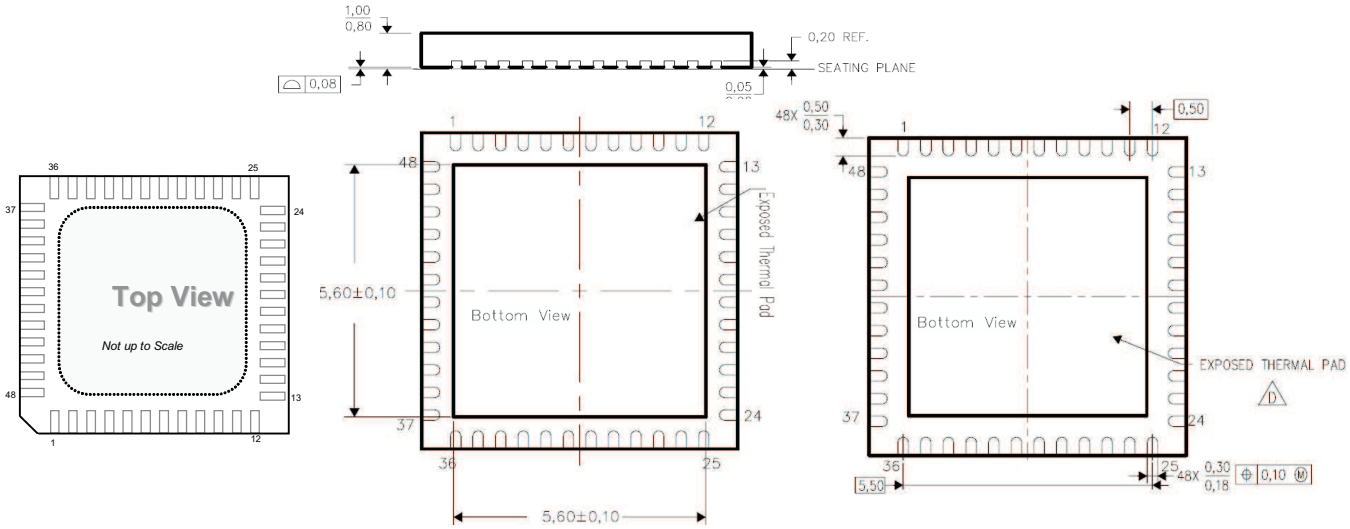


**Figure 2. 48-Pin QFN Package Outline**

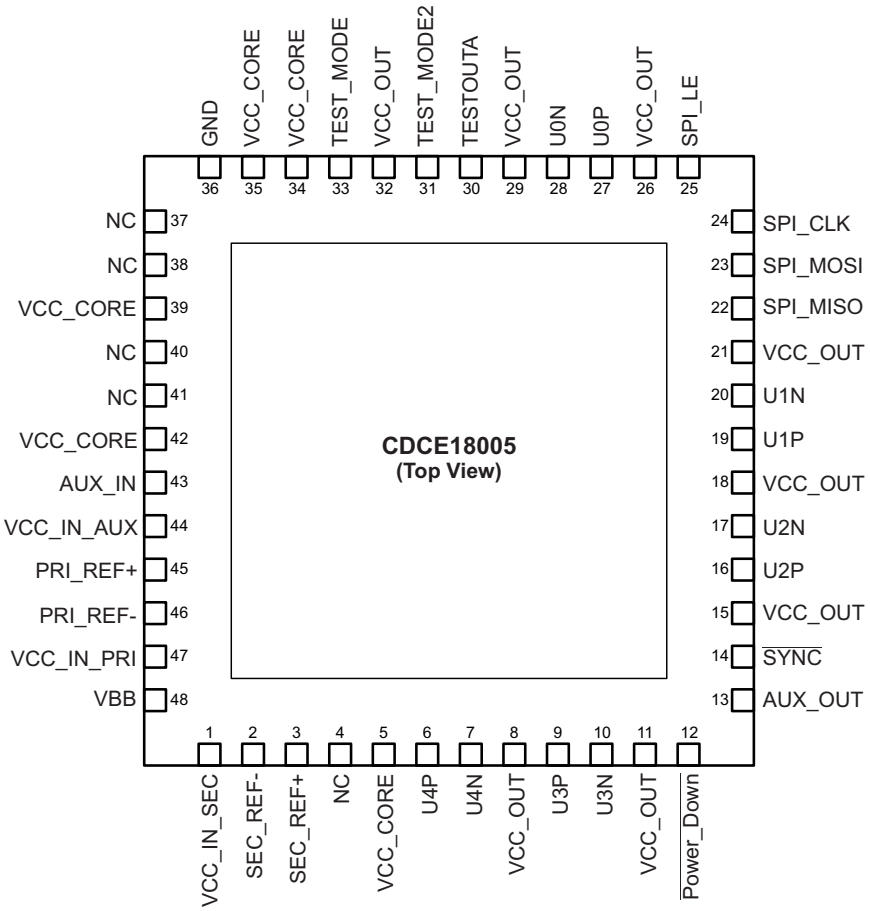



Copyright © 2008–2012, Texas Instruments Incorporated

## PIN FUNCTIONS(1)

| PIN | | TYPE | DESCRIPTION |
|---|---|---|---|
| NAME | QFN | | |
| VCC_OUT | 8, 11, 15, 18, 21, 26, 29, 32 | Power | 3.3V Supply for the Output Buffers |
| VCC_CORE | 5, 39, 42, 34, 35 | Power | 3.3V Core Voltage Circuitry |
| VCC_IN_PRI | 47 | A. Power | 3.3V References Input Buffer and Circuitry Supply Voltage. |
| VCC_IN_SEC | 1 | A. Power | 3.3V References Input Buffer and Circuitry Supply Voltage. |
| VCC_IN_AUX | 44 | A. Power | 3.3V Crystal Oscillator Input Circuitry. |
| GND | 36 | Ground | Ground (All internal Ground Pins are connected to the PAD) |
| GND | PAD | Ground | Ground is on Thermal PAD. See Layout recommendation |
| SPI_MISO | 22 | O | 3-state LVCMOS Output that is enabled when SPI_LE is asserted low. It is the serial Data Output to the SPI bus interface |
| SPI_LE | 25 | I | LVCMOS input, control Latch Enable for Serial Programmable Interface (SPI), with Hysteresis in SPI Mode. The input has an internal 150-kΩ pull-up resistor if left unconnected it will default to logic level "1". The SPI_LE status also impacts whether the device loads the EEPROM into the device registers at power up. SPI_LE has to be logic "0" before the Power_Down# toggles low-to-high in order for the EEPROM to load properly. |
| SPI_CLK | 24 | I | LVCMOS input, serial Control Clock Input for the SPI bus interface, with Hysteresis. The input has an internal 150-kΩ pull-up resistor if left unconnected it will default to logic level "1". |
| SPI_MOSI | 23 | I | LVCMOS input, Master Out Slave In as a serial Control Data Input to **CDCE18005** for the SPI bus interface. The input has an internal 150-kΩ pull-up resistor if left unconnected it will default to logic level "1". |
| TEST_MODE | 33 | I | Pull High or leave unconnected |
| TEST_MODE2 | 31 | I | Pull High or leave unconnected |
| $\overline{\text{Power_Down}}$ | 12 | I | Active Low. Power down mode can be activated via this pin. See Table 14 for more details. The input has an internal 150-kΩ pull-up resistor if left unconnected it will default to logic level "1". SPI_LE has to be HIGH in order for the rising edge of $\overline{\text{Power_Down}}$ signal to load the EEPROM. |
| $\overline{\text{SYNC}}$ | 14 | I | Active Low. Sync mode can be activated via this pin. See Table 14 for more details. The input has an internal 150-kΩ, pull-up resistor if left unconnected it will default to logic level “1”. |
| AUX_IN | 43 | I | Auxiliary Input is a single ended input including an on-board oscillator circuit so that a crystal may be connected. |
| AUX_OUT | 13 | O | Auxiliary Output LVCMOS level that can be programmed via SPI interface to be driven by Output 2 or Output 3. |
| PRI_REF+ | 45 | I | Universal Input Buffer (LVPECL, LVDS, LVCMOS) positive input for the Primary Reference Clock, |
| PRI_REF– | 46 | I | Universal Input Buffer (LVPECL, LVDS) negative input for the Primary Reference Clock. In case of LVCMOS signaling Ground this pin through 1kΩ resistor. |
| SEC_REF+ | 3 | I | Universal Input Buffer (LVPECL, LVDS, LVCMOS) positive input for the Secondary Reference Clock, |
| SEC_REF– | 2 | I | Universal Input Buffer (LVPECL, LVDS,) negative input for the Secondary Reference Clock. In case of LVCMOS signaling Ground this pin through 1kΩ resistor. |
| TESTOUTA | 30 | Analog | Analog Test Point for Use for TI Internal Testing. Pull Down to GND Via a 1kΩ Resistor. |
| NC | 4, 37, 38, 40, 41 | | This Pin is not used |
| VBB | 48 | Analog | Capacitor for the internal termination viltage. Connect to a 1µF Capacitor. |
| U0P:U0N<br>U1P:U1N:<br>U2P:U2N<br>U3P:U3N<br>U4P:U4N | 27, 28<br>19, 20<br>16,17<br>9, 10<br>6, 7 | O | The Main outputs of **CDCE18005** are user definable and can be any combination of up to 5 LVPECL outputs, 5 LVDS outputs or up to 10 LVCMOS outputs. The outputs are selectable via SPI interface. The power-up setting is EEPROM configurable. |

(1) The internal memory (EEPROM and RAM) are sourced from various power pins. All VCC connections must be powered for proper functionality of the device.

Copyright © 2008–2012, Texas Instruments Incorporated

## FUNCTIONAL DESCRIPTION

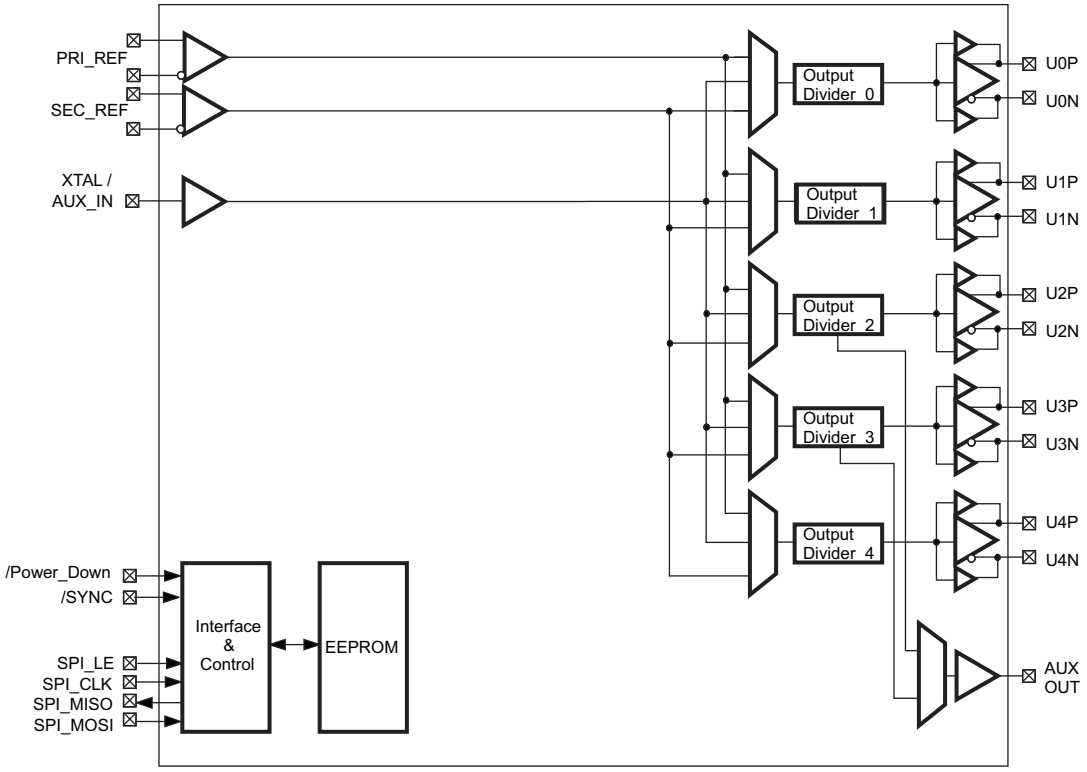


**Figure 3. CDCE18005 Block Diagram**

The CDCE18005 comprises three primary blocks: the interface and control block, the input block and the output block. In order to determine which settings are appropriate for any specific combination of input/output frequencies, a basic understanding of these blocks is required. The interface and control block determines the state of the CDCE18005 at power-up based on the contents of the on-chip EEPROM. In addition to the EEPROM, the SPI port is available to configure the CDCE18005 by writing directly to the device registers after power-up. The input block buffers three clock signals, converts them to differential signals, and drives them onto an internal clock distribution bus. The output block provides five separate clock channels that are fully programmable and configurable to select and condition one of four internal clock sources

**NOTE**

This Section of the data sheet provides a high-level description of the features of the CDCE18005 for purpose of understanding its capabilities. For a complete description of device registers and I/O, please refer to the Device Configuration Section.


Copyright © 2008–2012, Texas Instruments Incorporated

## Interface and Control Block

The CDCE18005 is a highly flexible and configurable architecture and as such contains a number of registers so that the user may specify device operation. The contents of nine 28-bit wide registers implemented in static RAM determine device configuration at all times. The CDCE18005 implements the SPI Interface Mode. SPI Interface Mode is used to access the device RAM and EEPROM either during normal operation (if the host system provides a native SPI interface) or during device configuration (i.e. device programming). During power up the EEPROM content gets copied into the registers after the detection of a valid device power-up. The EEPROM can be locked enabling the designer to implement a fault tolerant design.

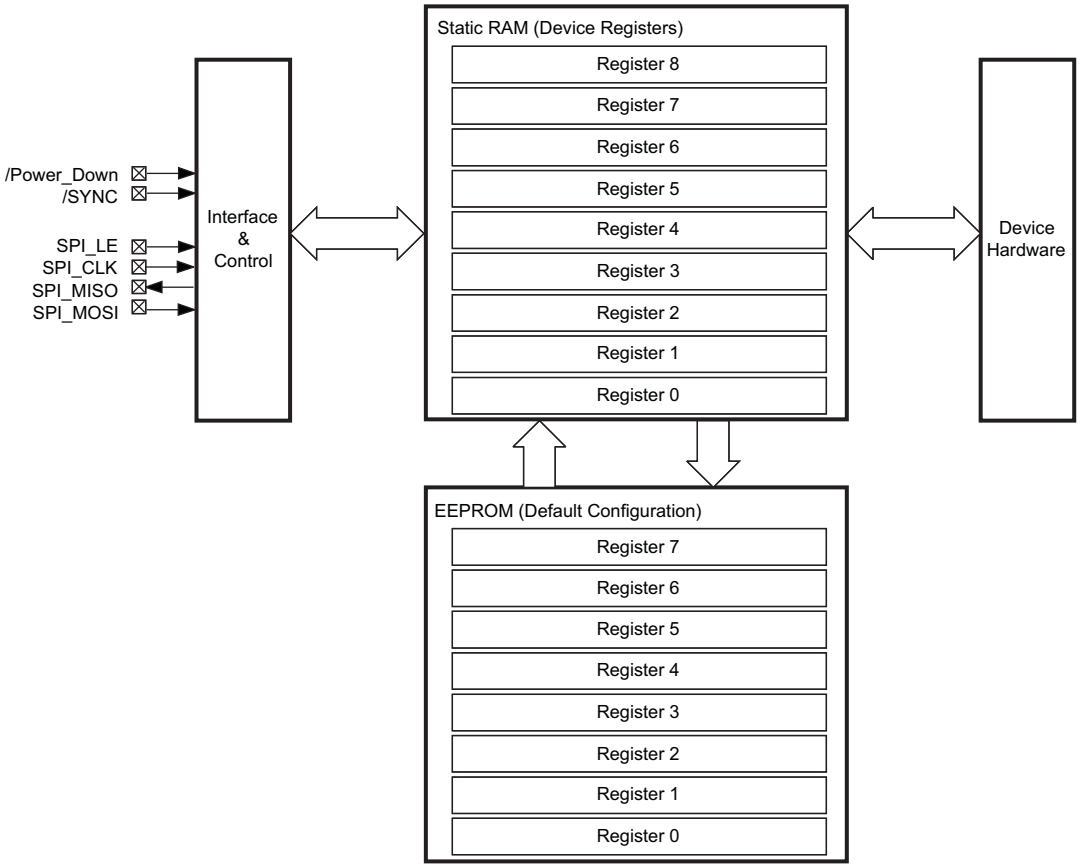


**Figure 4. CDCE18005 Interface and Control Block**

## Input Block

The Input Block includes a pair of Universal Input Buffers and an Auxiliary Input. The Input Block buffers the incoming signals and facilitates signal routing to the Internal Clock Distribution bus. The Internal Clock Distribution Bus connects to all output blocks discussed in the next section. Therefore, a clock signal present on the Internal Clock Distribution bus can appear on any or all of the device outputs.

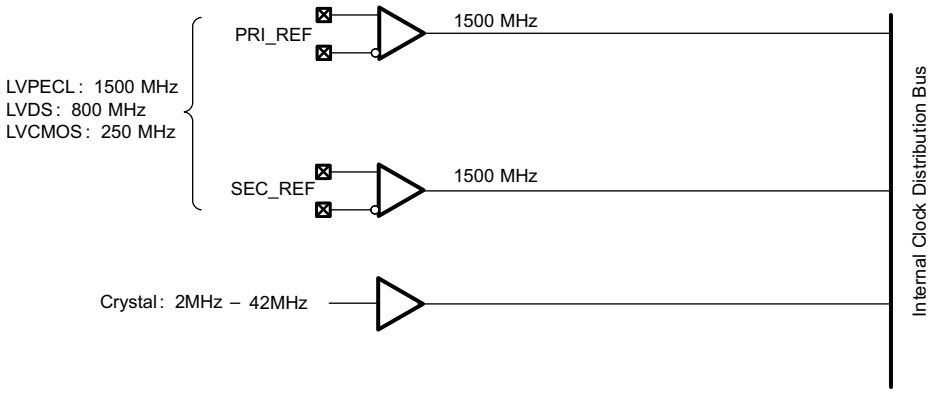


**Figure 5. CDCE18005 Input Block**


Copyright © 2008–2012, Texas Instruments Incorporated

## Output Block

Each of the five identical output blocks incorporates an output multiplexer, a clock divider module, and a universal output array as shown.

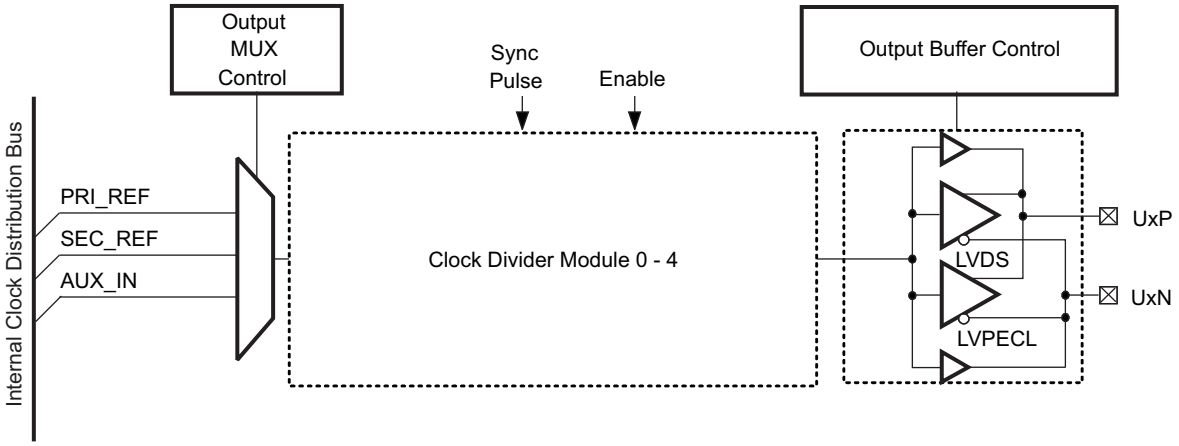


**Figure 6. CDCE18005 Output Block (1 of 5)**

### *Clock Divider Module 0–4*

The following shows a simplified version of a Clock Divider Module (CDM). If an individual clock output channel is not used, then the user should disable the CDM and Output Buffer for the unused channel to save device power. Each channel includes two 7-bit registers to control the divide ratio used and the clock phase for each output.

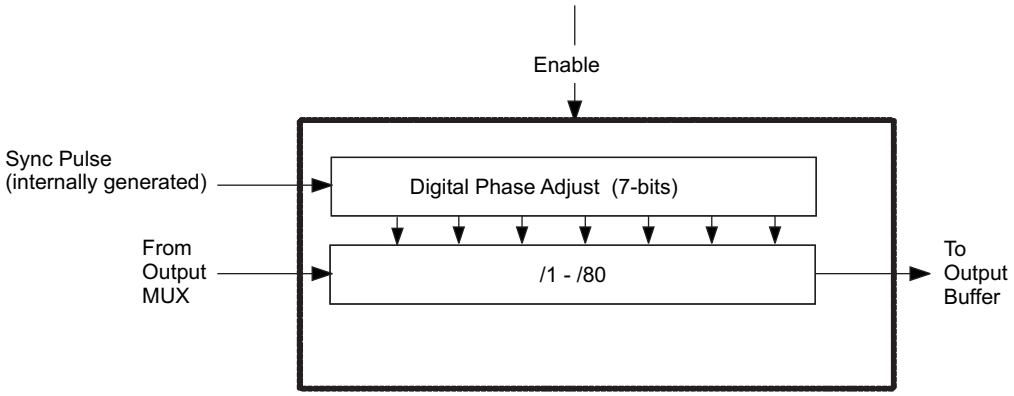


**Figure 7. CDCE18005 Output Divider Module (1 of 5)**

## ABSOLUTE MAXIMUM RATINGS

over operating free-air temperature range (unless otherwise noted)[1]

| | | VALUE | UNIT |
|---|---|---|---|
| $V_{CC}$ | Supply voltage range[2] | -0.5 to 4.6 | V |
| $V_I$ | Input voltage range[3] | –0.5 to VCC + 0.5 | V |
| $V_O$ | Output voltage range[3] | –0.5 to VCC + 0.5 | V |
| | Input Current ($V_I < 0$, $V_I > V_{CC}$) | ±20 | mA |
| | Output current for LVPECL/LVCMOS Outputs ($0 < V_O < V_{CC}$) | ±50 | mA |
| $T_J$ | Maximum junction temperature | 125 | °C |
| $T_{stg}$ | Storage temperature range | –65 to 150 | °C |

(1) Stresses beyond those listed under *absolute maximum ratings* may cause permanent damage to the device. These are stress ratings only and functional operation of the device at these or any other conditions beyond those indicated *under recommended operating conditions* is not implied. Exposure to absolute–maximum–rated conditions for extended periods may affect device reliability.
(2) All supply voltages have to be supplied simultaneously.
(3) The input and output negative voltage ratings may be exceeded if the input and output clamp–current ratings are observed.

## THERMAL CHARACTERISTICS

Package Thermal Resistance for QFN (RGZ) Package [1] [2]

| AIRFLOW (LFM) | | $\theta_{JP}$ (°C/W)[3] | $\theta_{JA}$ (°C/W) |
|---|---|---|---|
| 0 | JEDEC Compliant Board (6X6 VIAs on PAD) | 2 | 28.9 |
| 100 | JEDEC Compliant Board (6X6 VIAs on PAD) | 2 | 20.4 |
| 0 | Recommended Layout (7X7 VIAs on PAD) | 2 | 27.3 |
| 100 | Recommended Layout (7X7 VIAs on PAD) | 2 | 20.3 |

(1) The package thermal impedance is calculated in accordance with JESD 51 and JEDEC2S2P (high-k board).
(2) Connected to GND with 36 thermal vias (0,3 mm diameter).
(3) $\theta_{JP}$ (Junction – Pad) is used for the QFN Package, because the main heat flow is from the Junction to the GND-Pad of the QFN.


Copyright © 2008–2012, Texas Instruments Incorporated

## ELECTRICAL CHARACTERISTICS OPERATING CONDITIONS

recommended operating conditions for the **CDCE18005** device for under the specified Industrial temperature range of –40°C to 85°C

| PARAMETER | | TEST CONDITIONS | MIN | TYP | MAX | UNIT |
|---|---|---|---|---|---|---|
| **POWER SUPPLY** | | | | | | |
| $V_{CC}$ | Supply voltage | | 3 | 3.3 | 3.6 | V |
| $V_{CC_IN}$, $V_{Core}$ | Analog supply voltage | | 3 | 3.3 | 3.6 | |
| $P_{LVPECL}$ | REF at 491.52 MHz, Outputs are LVPECL | Output 1 = 491.52 MHz (LVCMOS = 245 MHz) Output 2 = 245.76 MHz Output 3 = 122.88 MHz Output 4 = 61.44 MHz Output 5 = 30.72 MHz | | 1.6 | | W |
| $P_{LVDS}$ | REF at 491.52 MHz, Outputs are LVDS | | | 1.3 | | W |
| $P_{LVCMOS}$ | REF at 491.52 MHz, Outputs are LVCMOS | | | 1.5 | | W |
| $P_{OFF}$ | REF at 491.52 MHz | Dividers are disabled. Outputs are disabled. | | 0.45 | | W |
| $P_{PD}$ | | Device is powered down | | 20 | | mW |
| **DIFFERENTIAL INPUT MODE (PRI_REF, SEC_REF)** | | | | | | |
| $V_{ID}$ | Differential input amplitude ($V_{IN} – V_{\overline{IN}}$) | | 0.1 | | 1.3 | V |
| $V_{IC}$ | Common-mode input voltage | | 1.0 | | $V_{CC}$–0.3 | V |
| $I_{IH}$ | Differential input current high (no internal termination) | $V_I = V_{CC}$, $V_{CC}$ = 3.6 V | | | 20 | µA |
| $I_{IL}$ | Differential input current low (no internal termination) | $V_I$ = 0 V, $V_{CC}$ = 3.6 V | –20 | | 20 | µA |
| | Input Capacitance on PRI_REF, SEC_REF | | | 3 | | pF |
| **CRYSTAL INPUT SPECIFICATIONS** | | | | | | |
| | On-chip load capacitance | | | 8 | 10 | pF |
| | Equivalent series resistance (ESR) | | | | 50 | Ω |
| **LVCMOS INPUT MODE (SPI_CLK, SPI_MOSI, SPI_LE, $\overline{\text{Power_Down}}$, $\overline{\text{SYNC}}$, PRI_REF, SEC_REF )** | | | | | | |
| | Low-level input voltage LVCMOS, | | 0 | | 0.3 $V_{CC}$ | V |
| | High-level input voltage LVCMOS | | 0.7 $V_{CC}$ | | $V_{CC}$ | V |
| $V_{IK}$ | LVCMOS input clamp voltage | $V_{CC}$ = 3 V, $I_I$ = –18 mA | | | –1.2 | V |
| $I_{IH}$ | LVCMOS input current | $V_I = V_{CC}$, $V_{CC}$ = 3.6 V | | | | µA |
| $I_{IL}$ | LVCMOS input (Except PRI_REF and SEC_REF) | $V_I$ = 0 V, $V_{CC}$ = 3.6 V | –10 | | –40 | µA |
| $I_{IL}$ | LVCMOS input (PRI_REF and SEC_REF) | $V_I$ = 0 V, $V_{CC}$ = 3.6 V | –10 | | 10 | µA |
| $C_I$ | Input capacitance (LVCMOS signals) | $V_I$ = 0 V or $V_{CC}$ | | 3 | | pF |

Copyright © 2008–2012, Texas Instruments Incorporated

## ELECTRICAL CHARACTERISTICS OPERATING CONDITIONS (Continued)

recommended operating conditions for the **CDCE18005** device for under the specified Industrial temperature range of –40°C to 85°C

| PARAMETER | | TEST CONDITIONS | | MIN | TYP(1) | MAX | UNIT |
|---|---|---|---|---|---|---|---|
| **SPI OUTPUT (MISO)** | | | | | | | |
| $I_{OH}$ | High-level output current | $V_{CC}$ = 3.3 V, | $V_O$ = 1.65 V | | –30 | | mA |
| $I_{OL}$ | Low-level output current | $V_{CC}$ = 3.3 V, | $V_O$ = 1.65 V | | 33 | | mA |
| $V_{OH}$ | High-level output voltage for LVCMOS outputs | $V_{CC}$ = 3 V, | $I_{OH}$ = −100 µA | $V_{CC}$–0.5 | | | V |
| $V_{OL}$ | Low-level output voltage for LVCMOS outputs | $V_{CC}$ = 3 V, | $I_{OL}$ = 100 µA | | | 0.3 | V |
| $C_O$ | Output capacitance on MISO | VCC = 3.3 V; VO = 0 V or VCC | | | 3 | | pF |
| $I_{OZH}$ | 3-state output current | $V_O$ = $V_{CC}$ , $V_O$ = 0 V | | | 5 | | µA |
| $I_{OZL}$ | | | | | –5 | | |
| **VBB** | | | | | | | |
| VBB | Termination voltage for reference inputs. | $I_{BB}$ = –0.2 mA, Depending on the setting. | | 0.9 | | 1.9 | V |
| **INPUT BUFFERS INTERNAL TERMINATION RESISTORS (PRI_REF and SEC_REF)** | | | | | | | |
| | Termination resistance | Single ended | | | 50 | | Ω |
| **LVCMOS OUTPUT / AUXILIARY OUTPUT** | | | | | | | |
| $f_{clk}$ | Output frequency, see Figure Below | Load = 5 pF to GND | | | | 250 | MHz |
| $V_{OH}$ | High-level output voltage for LVCMOS outputs | $V_{CC}$ = min to max | $I_{OH}$ = –100 µA | $V_{CC}$ –0.5 | | | |
| $V_{OL}$ | Low-level output voltage for LVCMOS outputs | $V_{CC}$ = min to max | $I_{OL}$ =100 µA | | | 0.3 | V |
| $I_{OH}$ | High-level output current | $V_{CC}$ = 3.3 V | $V_O$ = 1.65 V | | –30 | | mA |
| $I_{OL}$ | Low-level output current | $V_{CC}$ = 3.3 V | $V_O$ = 1.65 V | | 33 | | mA |
| $t_{pd(LH)}$/ $t_{pd(HL)}$ | Propagation delay from PRI_REF or SEC_REF to Outputs (LVCMOS to LVCMOS) | $V_{CC}$/2 to $V_{CC}$/2 | | | 4 | | ns |
| $t_{sk(o)}$ | Skew, output to output For Y0 to Y4 | All Outputs set at 200 MHz, Reference = 200 MHz | | | 75 | | ps |
| $C_O$ | Output capacitance on Y0 to Y4 | $V_{CC}$ = 3.3 V; $V_O$ = 0 V or $V_{CC}$ | | | 5 | | pF |
| $I_{OZH}$ | 3-State LVCMOS output current | $V_O$ = $V_{CC}$ | | | 5 | | µA |
| $I_{OZL}$ | | $V_O$ = 0 V | | | –5 | | µA |
| $I_{OPDH}$ | Power Down output current | $V_O$ = $V_{CC}$ | | | | 25 | µA |
| $I_{OPDL}$ | | $V_O$ = 0 V | | | | 5 | µA |
| | Duty cycle LVCMOS | 50% / 50% input duty cycle | | 45% | | 55% | |
| $t_{slew-rate}$ | Output rise/fall slew rate | | | 3.6 | 5.2 | | V/ns |

(1) All typical values are at $V_{CC}$ = 3.3 V, temperature = 25°C

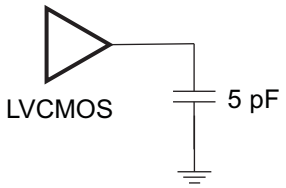



Copyright © 2008–2012, Texas Instruments Incorporated

## ELECTRICAL CHARACTERISTICS OPERATING CONDITIONS (Continued)

recommended operating conditions for the **CDCE18005** device for under the specified Industrial temperature range of –40°C to 85°C

| PARAMETER | | TEST CONDITIONS | MIN | TYP(1) | MAX | UNIT |
|---|---|---|---|---|---|---|
| **LVDS OUTPUT** | | | | | | |
| $f_{clk}$ | Output frequency | Configuration Load (100 Ω) | | | 800 | MHz |
| $\|V_{OD}\|$ | Differential output voltage | $R_L$ = 100 Ω | 270 | | 550 | mV |
| $\Delta V_{OD}$ | LVDS VOD magnitude change | | | | 50 | mV |
| $V_{OS}$ | Offset Voltage | –40°C to 85°C | | 1.24 | | V |
| $\Delta V_{OS}$ | VOS magnitude change | | | 40 | | mV |
| | Short circuit Vout+ to ground | VOUT = 0 | | | 27 | mA |
| | Short circuit Vout– to ground | VOUT = 0 | | | 27 | mA |
| $t_{pd(LH)}/t_{pd(HL)}$ | Propagation delay from PRI_REF or SEC_REF to outputs (LVDS to LVDS) | Crosspoint to Crosspoint | | 3.1 | | ns |
| $t_{sk(o)}$ (2) | Skew, output to output For Y0 to Y4 | All Outputs set at 200 MHz<br>Reference = 200 MHz | | 25 | | ps |
| $C_O$ | Output capacitance on Y0 to Y4 | $V_{CC}$ = 3.3 V; $V_O$ = 0 V or $V_{CC}$ | | 5 | | pF |
| $I_{OPDH}$ | Power down output current | $V_O = V_{CC}$ | | | 25 | µA |
| $I_{OPDL}$ | Power down output current | $V_O$ = 0 V | | | 5 | µA |
| | Duty cycle | 50% / 50% input duty cycle | 45% | | 55% | |
| $t_r$ / $t_f$ | Rise and fall time | 20% to 80% of $V_{OUT(PP)}$ | 110 | 160 | 190 | ps |
| **LVCMOS-TO-LVDS** | | | | | | |
| $t_{skP_c}$ | Output skew between LVCMOS and LVDS outputs(3) | Crosspoint to VCC/2 | 0.9 | 1.4 | 1.9 | ns |

(1) All typical values are at $V_{CC}$ = 3.3 V, temperature = 25°C
(2) The $t_{sk(o)}$ specification is only valid for equal loading of all outputs.
(3) The phase of LVCMOS is lagging in reference to the phase of LVDS.

LVDS DC Termination Test

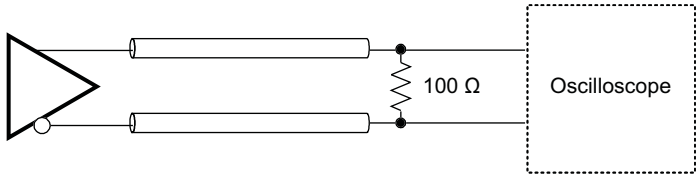

## ELECTRICAL CHARACTERISTICS OPERATING CONDITIONS (Continued)

recommended operating conditions for the **CDCE18005** device for under the specified Industrial temperature range of –40°C to 85°C

| PARAMETER | | TEST CONDITIONS | MIN | TYP(1) | MAX | UNIT |
|---|---|---|---|---|---|---|
| **LVPECL OUTPUT** | | | | | | |
| $f_{clk}$ | Output frequency | Configuration load (Figures below) | | | 1500 | MHz |
| $V_{OH}$ | LVPECL high-level output voltage load | | $V_{CC}$ –1.06 | | $V_{CC}$ –0.88 | V |
| $V_{OL}$ | LVPECL low-level output voltage load | | $V_{CC}$ –2.02 | | $V_{CC}$ –1.58 | V |
| $\|V_{OD}\|$ | Differential output voltage | | 610 | | 970 | mV |
| $t_{pd(LH)}$/ $t_{pd(HL)}$ | Propagation delay from PRI_REF or SEC_REF to outputs (LVPECL to LVPECL) | Crosspoint to Crosspoint | | 3.4 | | ns |
| $t_{sk(o)}$ | Skew, output to output For Y0 to Y4 | All Outputs set at 200 MHz Reference = 200MHz | | 25 | | ps |
| $C_O$ | Output capacitance on Y0 to Y4 | $V_{CC}$ = 3.3 V; $V_O$ = 0 V or $V_{CC}$ | | 5 | | pF |
| $I_{OPDH}$ | Power Down output current | $V_O$ = $V_{CC}$ | | | 25 | µA |
| $I_{OPDL}$ | | $V_O$ = 0 V | | | 5 | µA |
| | Duty Cycle | 50% / 50% input duty cycle | 45% | | 55% | |
| $t_r$ / $t_f$ | Rise and fall time | 20% to 80% of Voutpp | 55 | 75 | 135 | ps |
| **LVDS-TO-LVPECL** | | | | | | |
| $t_{skP_C}$ | Output skew between LVDS and LVPECL outputs | Crosspoint to Crosspoint | 0.9 | 1.1 | 1.3 | ns |
| **LVCMOS-TO-LVPECL** | | | | | | |
| $t_{skP_C}$ | Output skew between LVCMOS and LVPECL outputs | $V_{CC}$/2 to crosspoint | –150 | 260 | 700 | ps |
| **LVPECL HI-SWING OUTPUT** | | | | | | |
| $V_{OH}$ | LVPECL high-level output voltage load | | $V_{CC}$ –1.11 | | $V_{CC}$ –0.87 | V |
| $V_{OL}$ | LVPECL low-level output voltage load | | $V_{CC}$ –2.06 | | $V_{CC}$ –1.73 | V |
| $\|V_{OD}\|$ | Differential output voltage | | 760 | | 1160 | mV |
| $t_r$ / $t_f$ | Rise and fall time | 20% to 80% of Voutpp | 55 | 75 | 135 | ps |

(1) All typical values are at $V_{CC}$ = 3.3 V, temperature = 25°C

LVPECL AC Termination Test

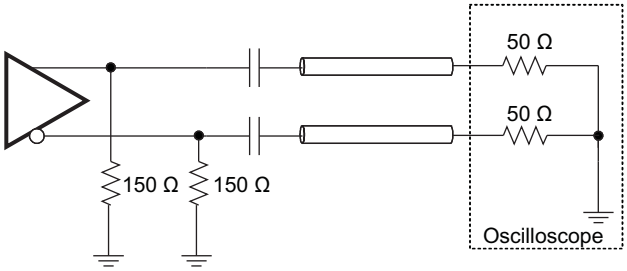


LVPECL DC Termination Test

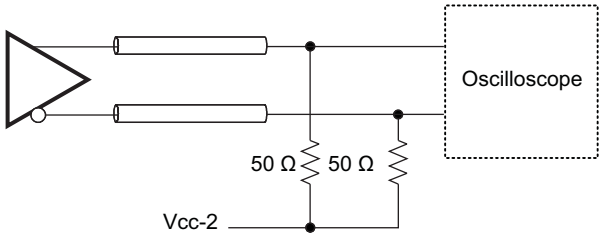



Copyright © 2008–2012, Texas Instruments Incorporated

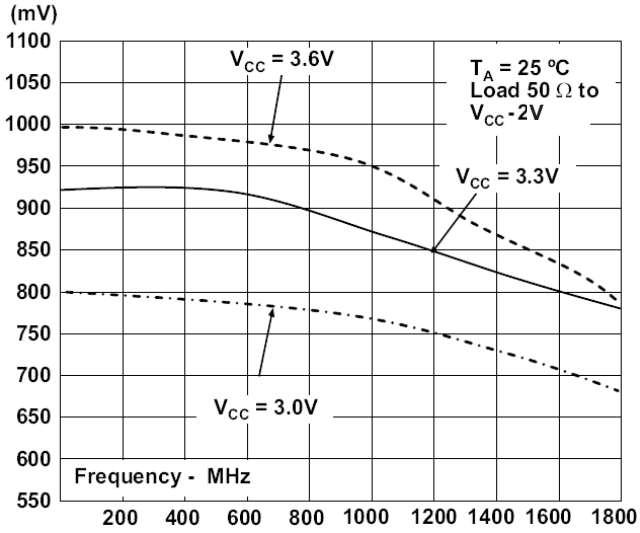


**Figure 8. LVPECL Output Swing vs Frequency**

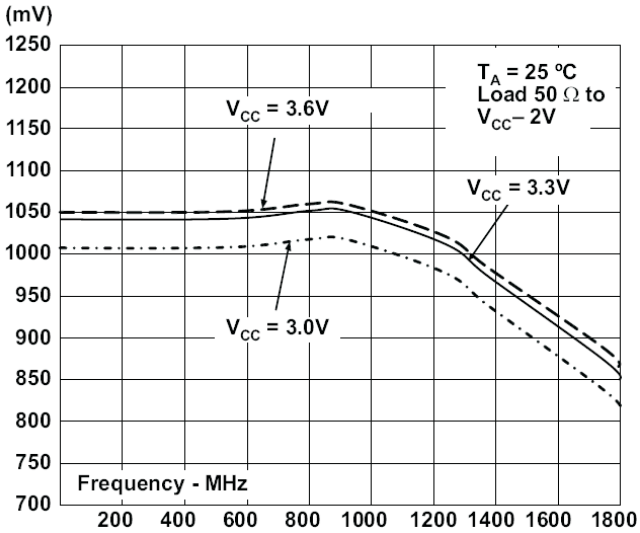


**Figure 9. HI Swing LVPECL Output Swing vs Frequency**

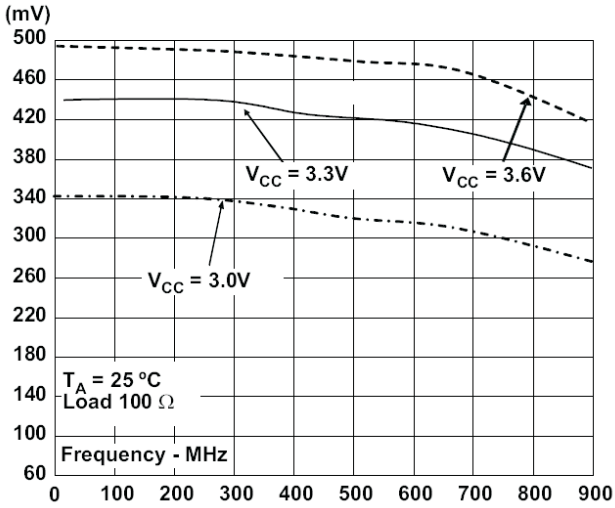


**Figure 10. LVDS Output Swing vs Frequency**

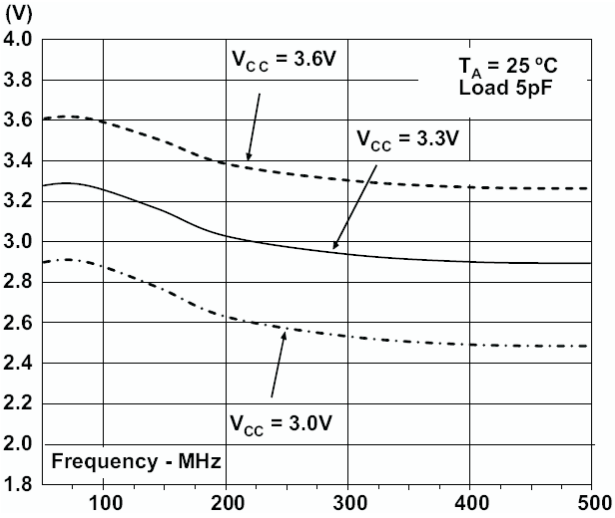


**Figure 11. LVCMOS Output Swing vs Frequency**

## TIMING REQUIREMENTS

over recommended ranges of supply voltage, load and operating free air temperature (unless otherwise noted)

| PARAMETER | | MIN | TYP | MAX | UNIT |
|---|---|---|---|---|---|
| **PRI_REF/SEC_REF INPUT REQUIREMENTS** | | | | | |
| $f_{max}$ | For Single ended Inputs ( LVCMOS) on PRI_REF and SEC_REF | | | 250 | MHz |
| | For Differential Inputs on PRI_REF and SEC_REF | | | 1500 | MHz |
| **AUX_IN Input REQUIREMENTS** | | | | | |
| $f_{REF}$ | AT-Cut Crystal Input | 2 | | 42 | MHz |
| | Drive level | 100 | | | µW |
| | Maximum Shunt Capacitance | | | 7 | pF |
| **$\overline{\text{Power_Down}}$, $\overline{\text{SYNC}}$ REQUIREMENTS** | | | | | |
| $t_r$/ $t_f$ | Rise and fall time of the $\overline{\text{Power_Down}}$, $\overline{\text{SYNC}}$, signal from 20% to 80% of $V_{CC}$ | | | 4 | ns |

## PHASE NOISE ANALYSIS

### Table 1. Output Phase Noise for a 491.52 MHz External Reference

| Phase Noise Specifications under following configuration: REF = 491.52 MHz Diff, LVPECL | | | | | |
|---|---|---|---|---|---|
| **Phase Noise** | **Reference 491.52 MHz** | **LVPECL 491.52 MHz** | **LVDS 245.52 MHz** | **LVCMOS 122.88 MHz** | **Unit** |
| 10 Hz | -86 | -84 | -90 | -96 | dBc/Hz |
| 100 Hz | -100 | -100 | -105 | -111 | dBc/Hz |
| 1 kHz | -108 | -109 | -115 | -121 | dBc/Hz |
| 10 kHz | -130 | -130 | -136 | -140 | dBc/Hz |
| 100 kHz | -135 | -135 | -140 | -145 | dBc/Hz |
| 1 MHz | -138 | -142 | -143 | -148 | dBc/Hz |
| 10 MHz | -150 | -148 | -150 | -153 | dBc/Hz |
| 20 MHz | -150 | -148 | -150 | -152 | dBc/Hz |
| Jitter RMS 10k–20MHz | 84 | 93 | 150 | 206 | fs |

### Table 2. Output Phase Noise for a 25 MHz Crystal Reference

| Phase Noise Specifications under following configuration: REF = 25 MHz, SE:LVCMOS | | | | |
|---|---|---|---|---|
| **PHASE NOISE** | **LVPECL 25 MHz** | **LVDS 25 MHz** | **LVCMOS 25 MHz** | **UNIT** |
| 10 Hz | -83 | -82 | -82 | dBc/Hz |
| 100 Hz | -115 | -116 | -115 | dBc/Hz |
| 1 kHz | -142 | -142 | -141 | dBc/Hz |
| 10 kHz | -152 | -149 | -151 | dBc/Hz |
| 100 kHz | -155 | -151 | -155 | dBc/Hz |
| 1 MHz | -157 | -151 | -158 | dBc/Hz |
| 5 MHz | -157 | -151 | -158 | dBc/Hz |
| Jitter RMS 10k–5MHz | 275 | 345 | 249 | fs |

## DEVICE CONFIGURATION

The Functional Description Section described three different functional blocks contained within the CDCE18005. Figure 12 depicts these blocks along with a high-level functional block diagram of the circuit elements comprising each block. The balance of this section focuses on a detailed discussion of each functional block from the perspective of how to configure them.


Copyright © 2008–2012, Texas Instruments Incorporated

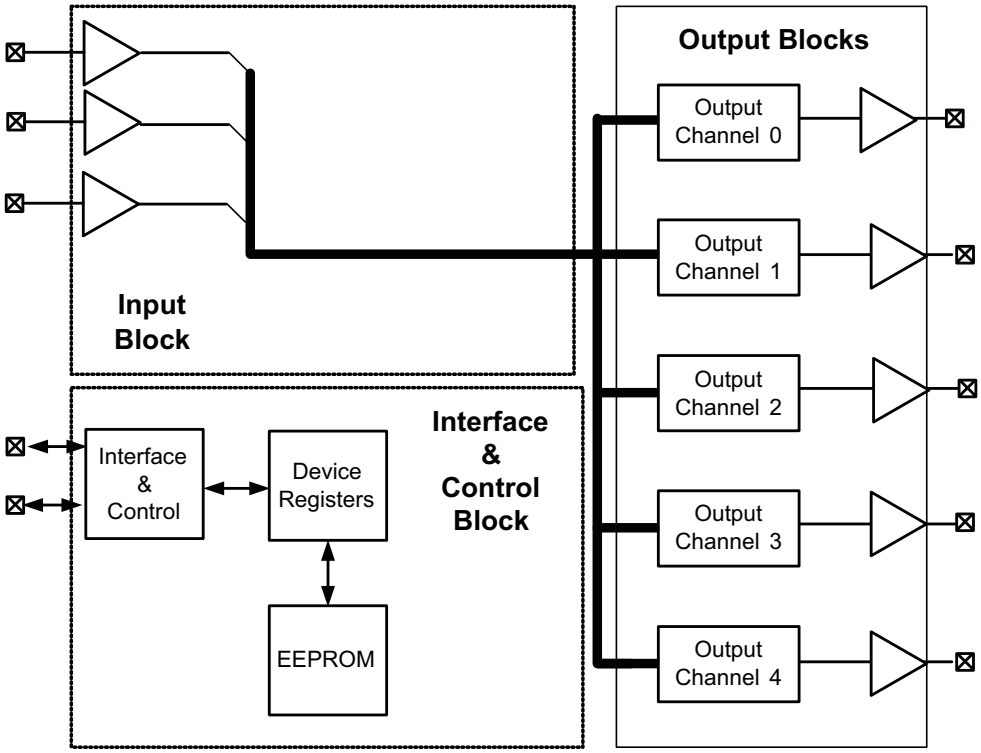


**Figure 12. CDCE18005 Circuit Blocks**

Throughout this section, references to Device Register memory locations follow the following convention:

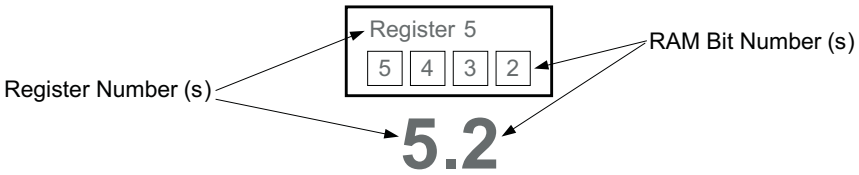


**Figure 13. Device Register Reference Convention**

## INTERFACE AND CONTROL BLOCK

The Interface and Control Block includes a SPI interface, two control pins, a non-volatile memory array in which the device stores default configuration data, and an array of device registers implemented in Static RAM. This RAM, also called the device registers, configures all hardware within the CDCE18005.

### SPI (Serial Peripheral Interface)

The serial interface of CDCE18005 is a simple bidirectional SPI interface for writing and reading to and from the device registers. It implements a low speed serial communications link in a master/slave topology in which the CDCE18005 is a slave. The SPI consists of four signals:

- **SPI_CLK:** Serial Clock (Output from Master) – the CDCE18005 clocks data in and out on the rising edge of SPI_CLK. Data transitions therefore occur on the falling edge of the clock.
- **SPI_MOSI:** Master Output Slave Input (Output from Master).
- **SPI_MISO:** Master Input Slave Output (Output from Slave).
- **SPI_LE:** Latch Enable (Output from Master). The falling edge of SPI_LE initiates a transfer. If SPI_LE is high, no data transfer can take place.

Copyright © 2008–2012, Texas Instruments Incorporated

### SPI Interface Master

The Interface master can be designed using a FPGA or a micro controller. The CDCE18005 acts as a slave to the SPI master and only supports nonconsecutive read and write command. The SPI clock should start and stop with respect to the SPI_LE signal as shown in Figure 14 SPI_MOSI, SPI_CLK and SPI_LE are generated by the SPI Master. SPI_MISO is generated by the SPI slave the CDCE18005.

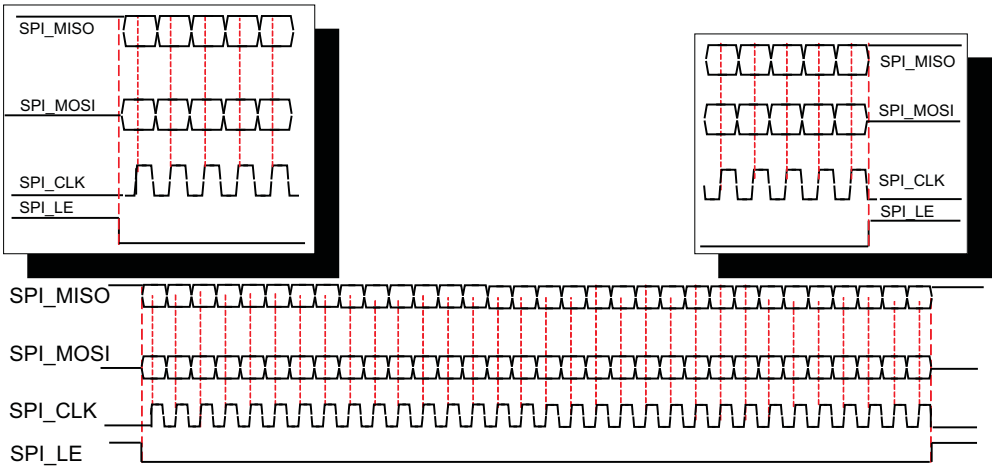


**Figure 14. CDCE18005 SPI Read/Write Command**

### SPI Consecutive Read/Write Cycles to the CDCE18005

Figure 15 Illustrates how two consecutive SPI cycles are performed between a SPI Master and the CDCE18005 SPI Slave.

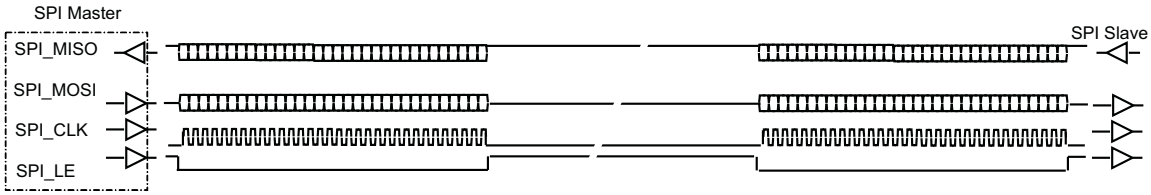


**Figure 15. Consecutive Read/Write Cycles**

### Writing to the CDCE18005

Figure 16 illustrates a Write to RAM operation. Notice that the latching of the first data bit in the data stream (Bit 0) occurs on the first rising edge of SPI_CLK after SPI_LE transitions from a high to a low. For the CDCE18005, data transitions occur on the falling edge of SPI_CLK. A rising edge on SPI_LE signals to the CDCE18005 that the transmission of the last bit in the stream (Bit 31) has occurred.

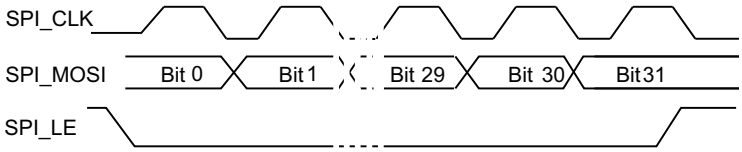


**Figure 16. CDCE18005 SPI Write Operation**


Copyright © 2008–2012, Texas Instruments Incorporated

### Reading from the CDCE18005

Figure 17 shows how the CDCE18005 executes a Read Command. The SPI master first issues a Read Command to initiate a data transfer from the CDCE18005 back to the host (see Table 5)This command specifies the address of the register of interest. By transitioning SPI_LE from a low to a high, the CDCE18005 resolves the address specified in the appropriate bits of the data field. The host drives SPI_LE low and the CDCE18005 presents the data present in the register specified in the Read Command on SPI_MISO.

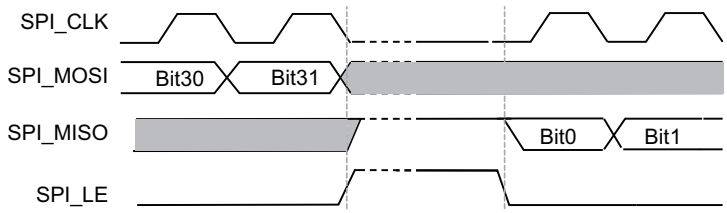


**Figure 17. CDCE18005 SPI Read Operation**

### Writing to EEPROM

After the CDCE18005 detects a power-up and completes a reset cycle, the device copies the contents of the on-chip EEPROM into the Device Registers. (SPI_LE signal has to be HIGH in order for the EEPROM to load correctly during the rising edge of Power_Down signal).

The host issues one of two special commands shown in Table 6 to copy the contents of Device Registers 0 through 7 (a total of 224 bits) into EERPOM. They include:

- Copy RAM to EEPROM – Unlock, Execution of this command can happen many times.
- Copy RAM to EEPROM – Lock: Execution of this command can happen only once; after which the EEPROM is **permanently locked**.

After either command is initiated, power must remain stable and the host must not access the CDCE18005 for at least 50 ms to allow the EEPROM to complete the write cycle and to avoid the possibility of EEPROM corruption.

### SPI CONTROL INTERFACE TIMING

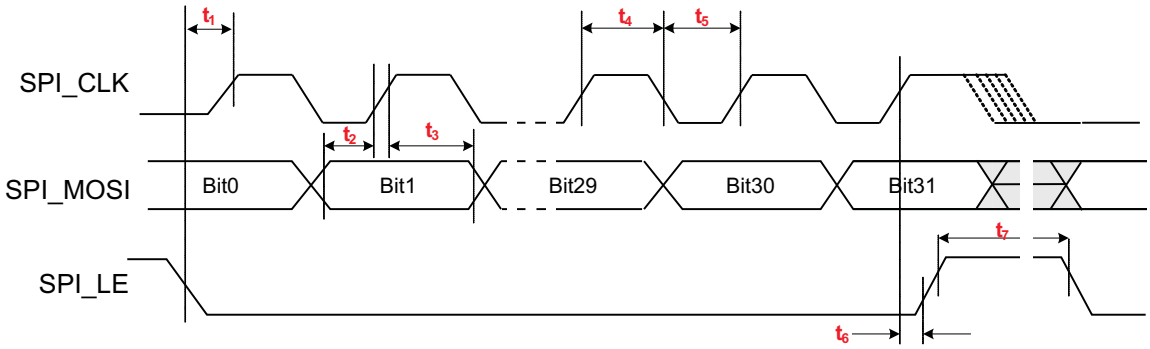


**Figure 18. Timing Diagram for SPI Write Command**

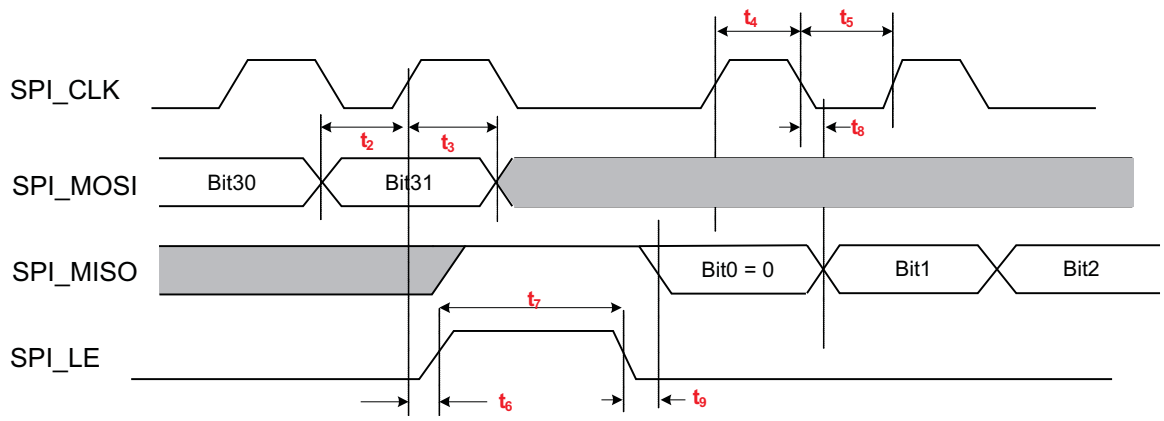


**Figure 19. Timing Diagram for SPI Read Command**

**Table 3. SPI Bus Timing Characteristics**

| SPI BUS TIMINGS | | | | | |
|---|---|---|---|---|---|
| PARAMETER | | MIN | TYP | MAX | UNIT |
| $f_{Clock}$ | Clock Frequency for the SPI_CLK | | | 20 | MHz |
| $t_1$ | SPI_LE to SPI_CLK setup time | 10 | | | ns |
| $t_2$ | SPI_MOSI to SPI_CLK setup time | 10 | | | ns |
| $t_3$ | SPI_MOSI to SPI_CLK hold time | 10 | | | ns |
| $t_4$ | SPI_CLK high duration | 25 | | | ns |
| $t_5$ | SPI_CLK low duration | 25 | | | ns |
| $t_6$ | SPI_CLK to SPI_LE Hold time | 10 | | | ns |
| $t_7$ | SPI_LE Pulse Width | 20 | | | ns |
| $t_8$ | SPI_CLK to MISO data valid | | | 10 | ns |
| $t_9$ | SPI_LE to SPI_MISO Data Valid | | | 10 | ns |

### CDCE18005 SPI Command Structure

The CDCE18005 supports four commands issued by the Master via the SPI:

- Write to RAM
- Read Command
- Copy RAM to EEPROM – unlock
- Copy RAM to EEPROM – lock

Table 4 provides a summary of the CDCE18005 SPI command structure. The host (master) constructs a Write to RAM command by specifying the appropriate register address in the address field and appends this value to the beginning of the data field. Therefore, a valid command stream must include 32 bits, transmitted LSB first. The host must issue a Read Command to initiate a data transfer from the CDCE18005 back to the host. This command specifies the address of the register of interest in the data field.


Copyright © 2008–2012, Texas Instruments Incorporated

## Table 4. CDCE18005 SPI Command Structure

| | | | Data Field (28 Bits) | | | | | | | | | | | | | | | | | | | | | | | | | | | | | Addr Field (4 Bits) | | | |
|---|---|---|---|---|---|---|---|---|---|---|---|---|---|---|---|---|---|---|---|---|---|---|---|---|---|---|---|---|---|---|---|---|---|---|---|
| **Register** | **Operation** | **NVM** | **27** | **26** | **25** | **24** | **23** | **22** | **21** | **20** | **19** | **18** | **17** | **16** | **15** | **14** | **13** | **12** | **11** | **10** | **9** | **8** | **7** | **6** | **5** | **4** | **3** | **2** | **1** | **0** | **3** | **2** | **1** | **0** |
| 0 | Write to RAM | Yes | X | X | X | X | X | X | X | X | X | X | X | X | X | X | X | X | X | X | X | X | X | X | X | X | X | X | X | X | 0 | 0 | 0 | 0 |
| 1 | Write to RAM | Yes | X | X | X | X | X | X | X | X | X | X | X | X | X | X | X | X | X | X | X | X | X | X | X | X | X | X | X | X | 0 | 0 | 0 | 1 |
| 2 | Write to RAM | Yes | X | X | X | X | X | X | X | X | X | X | X | X | X | X | X | X | X | X | X | X | X | X | X | X | X | X | X | X | 0 | 0 | 1 | 0 |
| 3 | Write to RAM | Yes | X | X | X | X | X | X | X | X | X | X | X | X | X | X | X | X | X | X | X | X | X | X | X | X | X | X | X | X | 0 | 0 | 1 | 1 |
| 4 | Write to RAM | Yes | X | X | X | X | X | X | X | X | X | X | X | X | X | X | X | X | X | X | X | X | X | X | X | X | X | X | X | X | 0 | 1 | 0 | 0 |
| 5 | Write to RAM | Yes | X | X | X | X | X | X | X | X | X | X | X | X | X | X | X | X | X | X | X | X | X | X | X | X | X | X | X | X | 0 | 1 | 0 | 1 |
| 6 | Write to RAM | Yes | X | X | X | X | X | X | X | X | X | X | X | X | X | X | X | X | X | X | X | X | X | X | X | X | X | X | X | X | 0 | 1 | 1 | 0 |
| 7 | Write to RAM | Yes | X | X | X | X | X | X | X | X | X | X | X | X | X | X | X | X | X | X | X | X | X | X | X | X | X | X | X | X | 0 | 1 | 1 | 1 |
| 8 | Status/Control | No | X | X | X | X | X | X | X | X | X | X | X | X | X | X | X | X | X | X | X | X | X | X | X | X | X | X | X | X | 1 | 0 | 0 | 0 |
| Instruction | Read Command | No | 0 | 0 | 0 | 0 | 0 | 0 | 0 | 0 | 0 | 0 | 0 | 0 | 0 | 0 | 0 | 0 | 0 | 0 | 0 | 0 | 0 | 0 | 0 | 0 | A | A | A | A | 1 | 1 | 1 | 0 |
| Instruction | RAMM EEPROM | Unlock(1) | 0 | 0 | 0 | 0 | 0 | 0 | 0 | 0 | 0 | 0 | 0 | 0 | 0 | 0 | 0 | 0 | 0 | 0 | 0 | 0 | 0 | 0 | 0 | 0 | 0 | 0 | 0 | 1 | 1 | 1 | 1 | 1 |
| Instruction | RAMM EEPROM | Lock | 0 | 0 | 0 | 0 | 0 | 0 | 0 | 0 | 0 | 0 | 0 | 0 | 0 | 0 | 0 | 0 | 1 | 0 | 1 | 0 | 0 | 0 | 0 | 0 | 0 | 0 | 1 | 1 | 1 | 1 | 1 | 1 |

(1) **CAUTION:** After execution of this command, the EEPROM is permanently locked. After locking the EEPROM, device configuration can only be changed via Write to RAM after power-up; however, the EEPROM can no longer be changed

The CDCE18005 on-board EEPROM has been factory preset to the default settings listed in the table below.

| REGISTER | DEFAULT SETTING |
|---|---|
| REG0000 | 8140000 |
| REG0001 | 8140000 |
| REG0002 | 8140000 |
| REG0003 | 8140000 |
| REG0004 | 8140000 |
| REG0005 | 0000096 |
| REG0006 | 0000000 |
| REG0007 | 9400000 |

The default configuration programmed in the device is set to: PRI_REF (set to LVPECL) feeding all outputs. Output dividers are set to DIVIDE by 1. All outputs are set to LVPECL.

## Device Registers: Register 0 Address 0x00

### Table 5. CDCE18005 Register 0 Bit Definitions

| RAM BIT | BIT NAME | RELATED BLOCK | DESCRIPTION/FUNCTION | |
|---|---|---|---|---|
| 0 | RESERVED | | Always Set to "0" for Proper Operation | EEPROM |
| 1 | RESERVED | | | EEPROM |
| 2 | RESERVED | | | EEPROM |
| 3 | RESERVED | | | EEPROM |
| 4 | OUTMUX0SELX | Output 0 | OUTPUT MUX “0” Select. Selects the Signal driving Output Divider ”0”<br>(X,Y) = 00: PRI_REF, 01: SEC_REF, 10: AUX_IN, 11: Reserved | EEPROM |
| 5 | OUTMUX0SELY | Output 0 | | EEPROM |
| 6 | PH0ADJC0 | Output 0 | Coarse phase adjust select for output divider “0” | EEPROM |
| 7 | PH0ADJC1 | Output 0 | | EEPROM |
| 8 | PH0ADJC2 | Output 0 | | EEPROM |
| 9 | PH0ADJC3 | Output 0 | | EEPROM |
| 10 | PH0ADJC4 | Output 0 | | EEPROM |
| 11 | PH0ADJC5 | Output 0 | | EEPROM |
| 12 | PH0ADJC6 | Output 0 | | EEPROM |
| 13 | OUT0DIVRSEL0 | Output 0 | OUTPUT DIVIDER “0” Ratio Select | EEPROM |
| 14 | OUT0DIVRSEL1 | Output 0 | | EEPROM |
| 15 | OUT0DIVRSEL2 | Output 0 | | EEPROM |
| 16 | OUT0DIVRSEL3 | Output 0 | | EEPROM |
| 17 | OUT0DIVRSEL4 | Output 0 | | EEPROM |
| 18 | OUT0DIVRSEL5 | Output 0 | | EEPROM |
| 19 | OUT0DIVRSEL6 | Output 0 | | EEPROM |
| 20 | OUT0DIVSEL | Output 0 | When set to “0”, the divider is disabled<br>When set to “1”, the divider is enabled | EEPROM |
| 21 | HiSWINGLVPECL0 | Output 0 | High Swing LVPECL When set to “1” and Normal Swing when set to “0”<br>– If LVCMOS or LVDS is selected the Output swing will stay at the same level.(1)<br>– If LVPECL buffer is selected the Output Swing will be 30% higher if this bit is set to “1” and Normal LVPECL if it is set to “0”. | EEPROM |
| 22 | CMOSMODE0PX | Output 0 | LVCMOS mode select for OUTPUT “0” Positive Pin.<br>(X,Y)=00:Active, 10:Inverting, 11:Low, 01:3-State | EEPROM |
| 23 | CMOSMODE0PY | Output 0 | | EEPROM |
| 24 | CMOSMODE0NX | Output 0 | LVCMOS mode select for OUTPUT “0” Negative Pin.<br>(X,Y)=00:Active, 10:Inverting, 11:Low, 01:3-State | EEPROM |
| 25 | CMOSMODE0NY | Output 0 | | EEPROM |
| 26 | OUTBUFSEL0X | Output 0 | | EEPROM |
| 27 | OUTBUFSEL0Y | Output 0 | | EEPROM |

| OUTPUT TYPE | RAM BITS | | | | | |
|---|---|---|---|---|---|---|
| | 22 | 23 | 24 | 25 | 26 | 27 |
| **LVPECL** | 0 | 0 | 0 | 0 | 0 | 1 |
| **LVDS** | 0 | 1 | 0 | 1 | 1 | 1 |
| **LVCMOS** | *See Settings Above** | | | | 0 | 0 |
| **Output Disabled** | 0 | 1 | 0 | 1 | 1 | 0 |

** Use Description for Bits 22,23,24 and 25 for setting the LVCMOS Outputs*

(1) Set Register R0.21 to '0' for LVDS and LVCMOS outputs


Copyright © 2008–2012, Texas Instruments Incorporated

## Device Registers: Register 1 Address 0x01

### Table 6. CDCE18005 Register 1 Bit Definitions

| RAM BIT | BIT NAME | RELATED BLOCK | DESCRIPTION/FUNCTION | |
|---|---|---|---|---|
| 0 | RESERVED | | Always St "0" for Proper Operation | EEPROM |
| 1 | RESERVED | | | EEPROM |
| 2 | RESERVED | | | EEPROM |
| 3 | RESERVED | | | EEPROM |
| 4 | OUTMUX1SELX | Output 1 | OUTPUT MUX “1” Select. Selects the Signal driving Output Divider ”1”<br>(X,Y) = 00: PRI_REF, 01:SEC_REF, 10:AUX_IN, 11:Reserved | EEPROM |
| 5 | OUTMUX1SELY | Output 1 | | EEPROM |
| 6 | PH1ADJC0 | Output 1 | Coarse phase adjust select for output divider “1” | EEPROM |
| 7 | PH1ADJC1 | Output 1 | | EEPROM |
| 8 | PH1ADJC2 | Output 1 | | EEPROM |
| 9 | PH1ADJC3 | Output 1 | | EEPROM |
| 10 | PH1ADJC4 | Output 1 | | EEPROM |
| 11 | PH1ADJC5 | Output 1 | | EEPROM |
| 12 | PH1ADJC6 | Output 1 | | EEPROM |
| 13 | OUT1DIVRSEL0 | Output 1 | OUTPUT DIVIDER “1” Ratio Select | EEPROM |
| 14 | OUT1DIVRSEL1 | Output 1 | | EEPROM |
| 15 | OUT1DIVRSEL2 | Output 1 | | EEPROM |
| 16 | OUT1DIVRSEL3 | Output 1 | | EEPROM |
| 17 | OUT1DIVRSEL4 | Output 1 | | EEPROM |
| 18 | OUT1DIVRSEL5 | Output 1 | | EEPROM |
| 19 | OUT1DIVRSEL6 | Output 1 | | EEPROM |
| 20 | OUT1DIVSEL | Output 1 | When set to “0”, the divider is disabled<br>When set to “1”, the divider is enabled | EEPROM |
| 21 | HiSWINGLVPECL1 | Output 1 | High Swing LVPECL When set to “1” and Normal Swing when set to “0”<br>– If LVCMOS or LVDS is selected the Output swing will stay at the same level.(1)<br>– If LVPECL buffer is selected the Output Swing will be 30% higher if this bit is set to “1” and Normal LVPECL if it is set to “0”. | EEPROM |
| 22 | CMOSMODE1PX | Output 1 | LVCMOS mode select for OUTPUT “1” Positive Pin.<br>(X,Y)=00:Active, 10:Inverting, 11:Low, 01:3-State | EEPROM |
| 23 | CMOSMODE1PY | Output 1 | | EEPROM |
| 24 | CMOSMODE1NX | Output 1 | LVCMOS mode select for OUTPUT “1” Negative Pin.<br>(X,Y)=00:Active, 10:Inverting, 11:Low, 01:3-State | EEPROM |
| 25 | CMOSMODE1NY | Output 1 | | EEPROM |
| 26 | OUTBUFSEL1X | Output 1 | | EEPROM |
| 27 | OUTBUFSEL1Y | Output 1 | | EEPROM |

| OUTPUT TYPE | RAM BITS | | | | | |
|---|---|---|---|---|---|---|
| | 22 | 23 | 24 | 25 | 26 | 27 |
| **LVPECL** | 0 | 0 | 0 | 0 | 0 | 1 |
| **LVDS** | 0 | 1 | 0 | 1 | 1 | 1 |
| **LVCMOS** | *See Settings Above** | | | | 0 | 0 |
| **Output Disabled** | 0 | 1 | 0 | 1 | 1 | 0 |

** Use Description for Bits 22,23,24 and 25 for setting the LVCMOS Outputs*

(1) Set Register R1.21 to '0' for LVDS and LVCMOS outputs

## Device Registers: Register 2 Address 0x02

### Table 7. CDCE18005 Register 2 Bit Definitions

| RAM BIT | BIT NAME | RELATED BLOCK | DESCRIPTION/FUNCTION | |
|---|---|---|---|---|
| 0 | RESERVED | | Always Set to "0" for Proper Operation | EEPROM |
| 1 | RESERVED | | | EEPROM |
| 2 | RESERVED | | | EEPROM |
| 3 | RESERVED | | | EEPROM |
| 4 | OUTMUX2SELX | Output 2 | OUTPUT MUX “2” Select. Selects the Signal driving Output Divider ”2”<br>(X,Y) = 00: PRI_REF, 01:SEC_REF, 10:AUX_IN, 11:Reserved | EEPROM |
| 5 | OUTMUX2SELY | Output 2 | | EEPROM |
| 6 | PH2ADJC0 | Output 2 | Coarse phase adjust select for output divider “2” | EEPROM |
| 7 | PH2ADJC1 | Output 2 | | EEPROM |
| 8 | PH2ADJC2 | Output 2 | | EEPROM |
| 9 | PH2ADJC3 | Output 2 | | EEPROM |
| 10 | PH2ADJC4 | Output 2 | | EEPROM |
| 11 | PH2ADJC5 | Output 2 | | EEPROM |
| 12 | PH2ADJC6 | Output 2 | | EEPROM |
| 13 | OUT2DIVRSEL0 | Output 2 | OUTPUT DIVIDER “2” Ratio Select | EEPROM |
| 14 | OUT2DIVRSEL1 | Output 2 | | EEPROM |
| 15 | OUT2DIVRSEL2 | Output 2 | | EEPROM |
| 16 | OUT2DIVRSEL3 | Output 2 | | EEPROM |
| 17 | OUT2DIVRSEL4 | Output 2 | | EEPROM |
| 18 | OUT2DIVRSEL5 | Output 2 | | EEPROM |
| 19 | OUT2DIVRSEL6 | Output 2 | | EEPROM |
| 20 | OUT2DIVSEL | Output 2 | When set to “0”, the divider is disabled<br>When set to “1”, the divider is enabled | EEPROM |
| 21 | HiSWINGLVPEC2 | Output 2 | High Swing LVPECL When set to “1” and Normal Swing when set to “0”<br>– If LVCMOS or LVDS is selected the Output swing will stay at the same level.(1)<br>– If LVPECL buffer is selected the Output Swing will be 30% higher if this bit is set to “1” and Normal LVPECL if it is set to “0”. | EEPROM |
| 22 | CMOSMODE2PX | Output 2 | LVCMOS mode select for OUTPUT “2” Positive Pin.<br>(X,Y)=00:Active, 10:Inverting, 11:Low, 01:3-State | EEPROM |
| 23 | CMOSMODE2PY | Output 2 | | EEPROM |
| 24 | CMOSMODE2NX | Output 2 | LVCMOS mode select for OUTPUT “2” Negative Pin.<br>(X,Y)=00:Active, 10:Inverting, 11:Low, 01:3-State | EEPROM |
| 25 | CMOSMODE2NY | Output 2 | | EEPROM |
| 26 | OUTBUFSEL2X | Output 2 | | EEPROM |
| 27 | OUTBUFSEL2Y | Output 2 | | EEPROM |

| OUTPUT TYPE | RAM BITS | | | | | |
|---|---|---|---|---|---|---|
| | 22 | 23 | 24 | 25 | 26 | 27 |
| **LVPECL** | 0 | 0 | 0 | 0 | 0 | 1 |
| **LVDS** | 0 | 1 | 0 | 1 | 1 | 1 |
| **LVCMOS** | *See Settings Above** | | | | 0 | 0 |
| **Output Disabled** | 0 | 1 | 0 | 1 | 1 | 0 |

** Use Description for Bits 22,23,24 and 25 for setting the LVCMOS Outputs*

(1) Set Register R2.21 to '0' for LVDS and LVCMOS outputs


Copyright © 2008–2012, Texas Instruments Incorporated

## Device Registers: Register 3 Address 0x03

### Table 8. CDCE18005 Register 3 Bit Definitions

| RAM BIT | BIT NAME | RELATED BLOCK | DESCRIPTION/FUNCTION | |
|---|---|---|---|---|
| 0 | RESERVED | | Always Set to "0" for Proper Operation | EEPROM |
| 1 | RESERVED | | | EEPROM |
| 2 | RESERVED | | | EEPROM |
| 3 | RESERVED | | | EEPROM |
| 4 | OUTMUX3SELX | Output 3 | OUTPUT MUX “3” Select. Selects the Signal driving Output Divider ”3”<br>(X,Y) = 00: PRI_REF, 01:SEC_REF, 10:AUX_IN, 11:Reserved | EEPROM |
| 5 | OUTMUX3SELY | Output 3 | | EEPROM |
| 6 | PH3ADJC0 | Output 3 | Coarse phase adjust select for output divider “3” | EEPROM |
| 7 | PH3ADJC1 | Output 3 | | EEPROM |
| 8 | PH3ADJC2 | Output 3 | | EEPROM |
| 9 | PH3ADJC3 | Output 3 | | EEPROM |
| 10 | PH3ADJC4 | Output 3 | | EEPROM |
| 11 | PH3ADJC5 | Output 3 | | EEPROM |
| 12 | PH3ADJC6 | Output 3 | | EEPROM |
| 13 | OUT3DIVRSEL0 | Output 3 | OUTPUT DIVIDER “3” Ratio Select | EEPROM |
| 14 | OUT3DIVRSEL1 | Output 3 | | EEPROM |
| 15 | OUT3DIVRSEL2 | Output 3 | | EEPROM |
| 16 | OUT3DIVRSEL3 | Output 3 | | EEPROM |
| 17 | OUT3DIVRSEL4 | Output 3 | | EEPROM |
| 18 | OUT3DIVRSEL5 | Output 3 | | EEPROM |
| 19 | OUT3DIVRSEL6 | Output 3 | | EEPROM |
| 20 | OUT3DIVSEL | Output 3 | When set to “0”, the divider is disabled<br>When set to “1”, the divider is enabled | EEPROM |
| 21 | HiSWINGLVPEC3 | Output 3 | High Swing LVPECL When set to “1” and Normal Swing when set to “0”<br>– If LVCMOS or LVDS is selected the Output swing will stay at the same level.(1)<br>– If LVPECL buffer is selected the Output Swing will be 30% higher if this bit is set to “1” and Normal LVPECL if it is set to “0”. | EEPROM |
| 22 | CMOSMODE3PX | Output 3 | LVCMOS mode select for OUTPUT “3” Positive Pin.<br>(X,Y)=00:Active, 10:Inverting, 11:Low, 01:3-State | EEPROM |
| 23 | CMOSMODE3PY | Output 3 | | EEPROM |
| 24 | CMOSMODE3NX | Output 3 | LVCMOS mode select for OUTPUT “3” Negative Pin.<br>(X,Y)=00:Active, 10:Inverting, 11:Low, 01:3-State | EEPROM |
| 25 | CMOSMODE3NY | Output 3 | | EEPROM |
| 26 | OUTBUFSEL3X | Output 3 | | EEPROM |
| 27 | OUTBUFSEL3Y | Output 3 | | EEPROM |

| OUTPUT TYPE | RAM BITS | | | | | |
|---|---|---|---|---|---|---|
| | 22 | 23 | 24 | 25 | 26 | 27 |
| **LVPECL** | 0 | 0 | 0 | 0 | 0 | 1 |
| **LVDS** | 0 | 1 | 0 | 1 | 1 | 1 |
| **LVCMOS** | *See Settings Above** | | | | 0 | 0 |
| **Output Disabled** | 0 | 1 | 0 | 1 | 1 | 0 |

** Use Description for Bits 22,23,24 and 25 for setting the LVCMOS Outputs*

(1) Set Register R3.21 to '0' for LVDS and LVCMOS outputs

## Device Registers: Register 4 Address 0x04

### Table 9. CDCE18005 Register 4 Bit Definitions

| RAM BIT | BIT NAME | RELATED BLOCK | DESCRIPTION/FUNCTION | |
|---|---|---|---|---|
| 0 | RESERVED | | Must be set to "0" for proper operation | EEPROM |
| 1 | RESERVED | | | EEPROM |
| 2 | RESERVED | | | EEPROM |
| 3 | RESERVED | | | EEPROM |
| 4 | OUTMUX4SELX | Output 4 | OUTPUT MUX “4” Select. Selects the Signal driving Output Divider ”4”<br>(X,Y) = 00: PRI_REF, 01:SEC_REF, 10:SMART_AUX_IN, 11:Reserved | EEPROM |
| 5 | OUTMUX4SELY | Output 4 | | EEPROM |
| 6 | PH4ADJC0 | Output 4 | Coarse phase adjust select for output divider “4” | EEPROM |
| 7 | PH4ADJC1 | Output 4 | | EEPROM |
| 8 | PH4ADJC2 | Output 4 | | EEPROM |
| 9 | PH4ADJC3 | Output 4 | | EEPROM |
| 10 | PH4ADJC4 | Output 4 | | EEPROM |
| 11 | PH4ADJC5 | Output 4 | | EEPROM |
| 12 | PH4ADJC6 | Output 4 | | EEPROM |
| 13 | OUT4DIVRSEL0 | Output 4 | OUTPUT DIVIDER “4” Ratio Select | EEPROM |
| 14 | OUT4DIVRSEL1 | Output 4 | | EEPROM |
| 15 | OUT4DIVRSEL2 | Output 4 | | EEPROM |
| 16 | OUT4DIVRSEL3 | Output 4 | | EEPROM |
| 17 | OUT4DIVRSEL4 | Output 4 | | EEPROM |
| 18 | OUT4DIVRSEL5 | Output 4 | | EEPROM |
| 19 | OUT4DIVRSEL6 | Output 4 | | EEPROM |
| 20 | OUT4DIVSEL | Output 4 | When set to “0”, the divider is disabled<br>When set to “1”, the divider is enabled | EEPROM |
| 21 | HiSWINGLVPEC4 | Output 4 | High Swing LVPECL When set to “1” and Normal Swing when set to “0”(1)<br>– If LVCMOS or LVDS is selected the Output swing will stay at the same level.<br>– If LVPECL buffer is selected the Output Swing will be 30% higher if this bit is set to “1” and Normal LVPECL if it is set to “0”. | EEPROM |
| 22 | CMOSMODE4PX | Output 4 | LVCMOS mode select for OUTPUT “4” Positive Pin.<br>(X,Y)=00:Active, 10:Inverting, 11:Low, 01:3-State | EEPROM |
| 23 | CMOSMODE4PY | Output 4 | | EEPROM |
| 24 | CMOSMODE4NX | Output 4 | LVCMOS mode select for OUTPUT “3” Negative Pin.<br>(X,Y)=00:Active, 10:Inverting, 11:Low, 01:3-State | EEPROM |
| 25 | CMOSMODE4NY | Output 4 | | EEPROM |
| 26 | OUTBUFSEL4X | Output 4 | | EEPROM |
| 27 | OUTBUFSEL4Y | Output 4 | | EEPROM |

| OUTPUT TYPE | RAM BITS | | | | | |
|---|---|---|---|---|---|---|
| | 22 | 23 | 24 | 25 | 26 | 27 |
| **LVPECL** | 0 | 0 | 0 | 0 | 0 | 1 |
| **LVDS** | 0 | 1 | 0 | 1 | 1 | 1 |
| **LVCMOS** | *See Settings Above** | | | | 0 | 0 |
| **Output Disabled** | 0 | 1 | 0 | 1 | 1 | 0 |

** Use Description for Bits 22,23,24 and 25 for setting the LVCMOS Outputs*

(1) Set Register R4.21 to '0' for LVDS and LVCMOS outputs


Copyright © 2008–2012, Texas Instruments Incorporated

## Device Registers: Register 5 Address 0x05

### Table 10. CDCE18005 Register 5 Bit Definitions

| RAM BIT | BIT NAME | RELATED BLOCK | DESCRIPTION/FUNCTION | |
|---|---|---|---|---|
| 0 | INBUFSELX | INBUFSELX | Input Buffer Select (LVPECL,LVDS or LVCMOS)<br>XY(01 ) LVPECL, (11) LVDS, (00) LVCMOS- Input is Positive Pin | EEPROM |
| 1 | INBUFSELY | INBUFSELY | | EEPROM |
| 2 | SYNCSEL1 | Output Divider Synchronization | SYNCSEL(1,2)= 10 :Output divider sync to Primary input<br>SYNCSEL(1,2)= 01 :Output divider sync to Secondary input<br>SYNCSEL(1,2)= 00 :Output divider sync to Auxiliary input | EEPROM |
| 3 | SYNCSEL2 | | | EEPROM |
| 4 | RESERVED | | Always Set to **"1"** for Proper Operation | EEPROM |
| 5 | RESERVED | | Always Set to **"0"** for Proper Operation | EEPROM |
| 6 | ACDCSEL | Input Buffers | If Set to “1” DC Termination, If set to “0” AC Termination | EEPROM |
| 7 | HYSTEN | Input Buffers | If Set to “1” Input Buffers Hysteresis Enabled. It is not recommended that Hysteresis be disabled. | EEPROM |
| 8 | PRI_TERMSEL | Input Buffers | If Set to “0” Primary Input Buffer Internal Termination Enabled<br>If set to “1” Primary Internal Termination circuitry Disabled | EEPROM |
| 9 | PRIINVBB | Input Buffers | If Set to “1” Primary Input Negative Pin Biased with Internal VBB Voltage. | EEPROM |
| 10 | SECINVBB | Input Buffers | If Set to “1” Secondary Input Negative Pin Biased with Internal VBB Voltage | EEPROM |
| 11 | FAILSAFE | Input Buffers | If Set to “1” Fail Safe is Enabled for all Input Buffers configured as LVDS, DC Coupling only. | EEPROM |
| 12 | RESERVED | - - - - | Must be set to "0" for proper operation | EEPROM |
| 13 | RESERVED | | | EEPROM |
| 14 | RESERVED | | | EEPROM |
| 15 | RESERVED | | | EEPROM |
| 16 | RESERVED | | | EEPROM |
| 17 | RESERVED | | | EEPROM |
| 18 | RESERVED | | | EEPROM |
| 19 | RESERVED | | | EEPROM |
| 20 | RESERVED | | | EEPROM |
| 21 | RESERVED | | | EEPROM |
| 22 | RESERVED | | | EEPROM |
| 23 | RESERVED | | | EEPROM |
| 24 | RESERVED | | | EEPROM |
| 25 | RESERVED | | | EEPROM |
| 26 | RESERVED | | | EEPROM |
| 27 | RESERVED | | | EEPROM |

Copyright © 2008–2012, Texas Instruments Incorporated

## Device Registers: Register 6 Address 0x06

### Table 11. CDCE18005 Register 6 Bit Definitions

| RAM BIT | BIT NAME | RELATED BLOCK | DESCRIPTION/FUNCTION | |
|---|---|---|---|---|
| 0 | RESERVED | | Must be set to "0" | EEPROM |
| 1 | RESERVED | | | EEPROM |
| 2 | RESERVED | | | EEPROM |
| 3 | RESERVED | | | EEPROM |
| 4 | RESERVED | | | EEPROM |
| 5 | RESERVED | | | EEPROM |
| 6 | RESERVED | | | EEPROM |
| 7 | RESERVED | | | EEPROM |
| 8 | RESERVED | | | EEPROM |
| 9 | RESERVED | | | EEPROM |
| 10 | RESERVED | | | EEPROM |
| 11 | RESERVED | | | EEPROM |
| 12 | SEC_TERMSEL | Input Buffers | If Set to “0” Secondary Input Buffer Internal Termination Enabled<br>If set to “1” Secondary Internal Termination circuitry Disabled | EEPROM |
| 13 | RESERVED | | Must be set to "0" | EEPROM |
| 14 | RESERVED | | | EEPROM |
| 15 | RESERVED | | | EEPROM |
| 16 | RESERVED | | | EEPROM |
| 17 | RESERVED | | | EEPROM |
| 18 | RESERVED | | | EEPROM |
| 19 | RESERVED | | | EEPROM |
| 20 | RESERVED | | | EEPROM |
| 21 | RESERVED | | | EEPROM |
| 22 | RESERVED | | | EEPROM |
| 23 | RESERVED | | | EEPROM |
| 24 | AUXOUTEN | Output AUX | Enable Auxiliary Output when set to “1” | EEPROM |
| 25 | AUXFEEDSEL | Output AUX | Select the Output that will driving the AUX Output;<br>Low for Selecting Output Divider “2” and High for Selecting Output Divider “3” | EEPROM |
| 26 | RESERVED | | Must be set to "0" | EEPROM |
| 27 | RESERVED | | Must be set to "0" | EEPROM |


Copyright © 2008–2012, Texas Instruments Incorporated

## Device Registers: Register 7 Address 0x07

**Table 12. CDCE18005 Register 7 Bit Definitions**

| RAM BIT | BIT NAME | RELATED BLOCK | DESCRIPTION/FUNCTION | |
|---|---|---|---|---|
| 0 | RESERVED | | Always Set to "0" for Proper Operation | EEPROM |
| 1 | RESERVED | | | EEPROM |
| 2 | RESERVED | | | EEPROM |
| 3 | RESERVED | | | EEPROM |
| 4 | RESERVED | | | EEPROM |
| 5 | RESERVED | | | EEPROM |
| 6 | RESERVED | | | EEPROM |
| 7 | RESERVED | | | EEPROM |
| 8 | RESERVED | | | EEPROM |
| 9 | RESERVED | | | EEPROM |
| 10 | RESERVED | | | EEPROM |
| 11 | RESERVED | | | EEPROM |
| 12 | RESERVED | | | EEPROM |
| 13 | RESERVED | | | EEPROM |
| 14 | RESERVED | | | EEPROM |
| 15 | RESERVED | | | EEPROM |
| 16 | RESERVED | | | EEPROM |
| 17 | RESERVED | | | EEPROM |
| 18 | RESERVED | | | EEPROM |
| 19 | RESERVED | | | EEPROM |
| 20 | RESERVED | | | EEPROM |
| 21 | RESERVED | | | EEPROM |
| 22 | TESTMUX1 | Diagnostics | Set to “1” | EEPROM |
| 23 | RESERVED | | Always Set to "0" for Proper Operation | EEPROM |
| 24 | TEXTMUX2 | Diagnostics | Set to “1” | EEPROM |
| 25 | RESERVED | | Always Set to "0" for Proper Operation | EEPROM |
| 26 | EPUNLOCK | Status | If it reads "0" the EEPROM is unlocked. If it reads "1" the EEPROM is Locked | RAM |
| 27 | EPSTATUS | Status | Read only; always reads "1" | RAM |

Copyright © 2008–2012, Texas Instruments Incorporated

## Device Registers: Register 8 Address 0x08

**Table 13. CDCE18005 Register 8 Bit Definitions(1)**

| RAM BIT | BIT NAME | RELATED BLOCK | DESCRIPTION/FUNCTION | |
|---|---|---|---|---|
| 0 | RESERVED | | | RAM |
| 1 | RESERVED | | | RAM |
| 2 | RESERVED | | | RAM |
| 3 | RESERVED | | *TI Test Registers. For TI Use Only* | RAM |
| 4 | RESERVED | | | RAM |
| 5 | RESERVED | | | RAM |
| 6 | RESERVED | | | RAM |
| 7 | $\overline{\text{SLEEP}}$ | Status | Set Device Sleep mode On when set to “0”, Normal Mode when set to “1” | RAM |
| 8 | $\overline{\text{SYNC}}$ | Status | If set to “0” this bit forces “$\overline{\text{SYNC}}$ ; Set to “1” to exit the Synchronization State. | RAM |
| 9 | RESERVED | | Must be set to "0" | RAM |
| 10 | VERSION0 | | Silicon Revision | RAM |
| 11 | VERSION1 | | Silicon Revision | RAM |
| 12 | VERSION2 | | Silicon Revision | RAM |
| 13 | RESERVED | | | RAM |
| 14 | RESERVED | | | RAM |
| 15 | RESERVED | | | RAM |
| 16 | RESERVED | | | RAM |
| 17 | RESERVED | | | RAM |
| 18 | RESERVED | | | RAM |
| 19 | RESERVED | | | RAM |
| 20 | RESERVED | | *TI Test Registers. For TI Use Only* | RAM |
| 21 | RESERVED | | | RAM |
| 22 | RESERVED | | | RAM |
| 23 | RESERVED | | | RAM |
| 24 | RESERVED | | | RAM |
| 25 | RESERVED | | | RAM |
| 26 | RESERVED | | | RAM |
| 27 | RESERVED | | | RAM |

(1) All reserved Bits can be set to "0" when writing to Register 8


Copyright © 2008–2012, Texas Instruments Incorporated

## Device Control

Figure 20 provides a conceptual explanation of the CDCE18005 Device operation. Table 14 defines how the device behaves in each of the operational states.

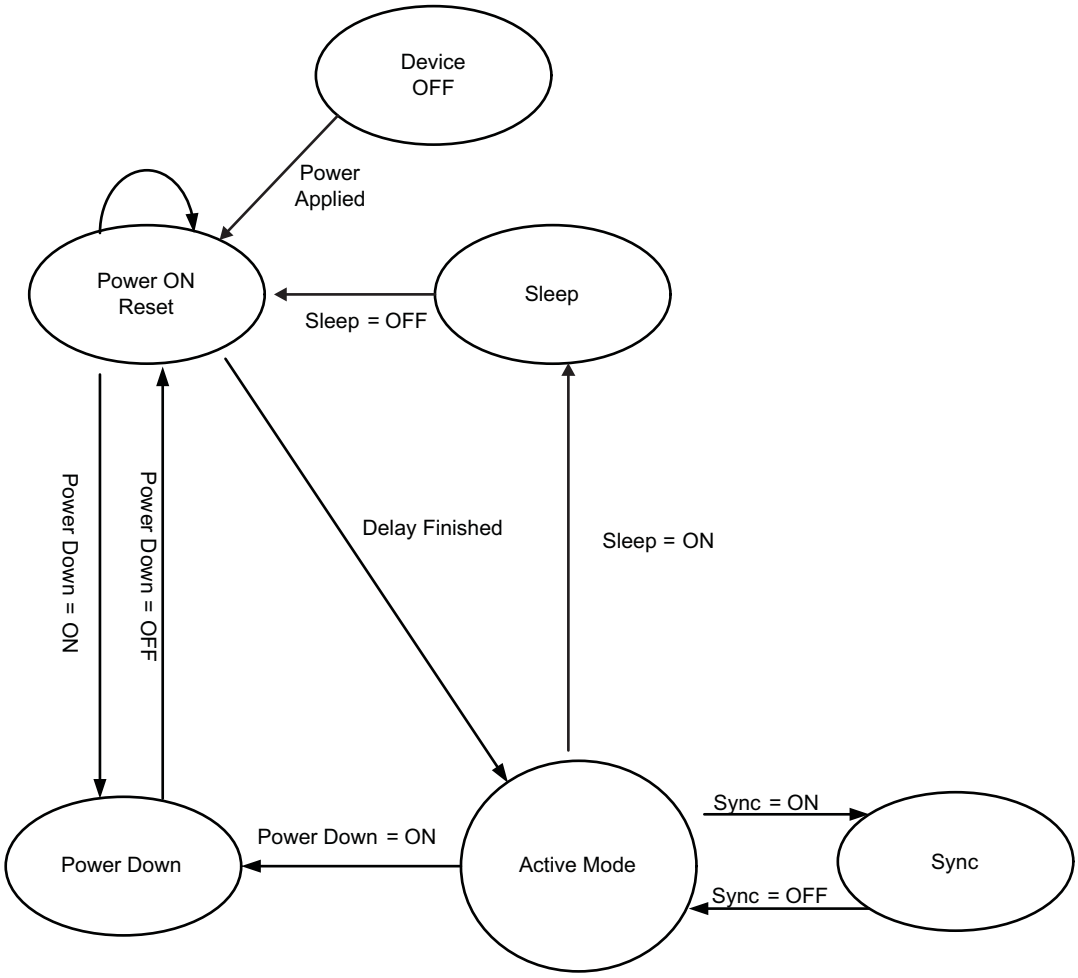


**Figure 20. CDCE18005 Device State Control Diagram**

**Table 14. CDCE18005 Device State Definitions**

| State | Device Behavior | Entered Via | Exited Via | Status | | |
|---|---|---|---|---|---|---|
| | | | | SPI Port | Output Divider | Output Buffer |
| Power-On Reset | After device power supply reaches approximately 2.35V, the contents of EEPROM are copied into the Device Registers within 100 ns, thereby initializing the device hardware. | Power applied to the device or upon exit from Power Down State via the Power_Down pin set HIGH. | Power On Reset and EEPROM loading delays are finished OR the Power_Down pin is set LOW. | OFF | Disabled | OFF |
| Active Mode | Normal Operation | Sync = OFF (from Sync State). | Sync, Power Down, Sleep, or Manual Recalibration activated. | ON | Disabled or Enabled | HI-Z or Enabled |
| Power Down | Used to shut down all hardware and Resets the device after exiting the Power Down State. Therefore, the EEPROM contents will eventually be copied into RAM after the Power Down State is exited. | Power_Down pin is pulled LOW. | Power_Down pin is pulled HIGH. | ON | Disabled | HI-Z |
| Sleep | Identical to the Power Down State except the EEPROM contents are not copied into RAM. | SLEEP bit in device register 8 bit 7 is set LOW. | SLEEP bit in device register 8 bit 7 is set HIGH. | ON | Disabled | HI-Z |

**Table 14. CDCE18005 Device State Definitions (continued)**

| State | Device Behavior | Entered Via | Exited Via | Status | | |
|---|---|---|---|---|---|---|
| | | | | SPI Port | Output Divider | Output Buffer |
| Sync | Sync synchronizes all output dividers so that they begin counting at the same time. Note: this operation is performed automatically each time a divider register is accessed. | $\overline{\text{SYNC}}$ Bit in device register 8 bit 8 is set LOW or $\overline{\text{SYNC}}$ pin is pulled LOW | $\overline{\text{SYNC}}$ Bit in device register 8 bit 8 is set HIGH or $\overline{\text{SYNC}}$ pin is pulled HIGH | ON | Disabled | HI-Z |

## External Control Pins

### $\overline{\text{Power_Down}}$

The Power_Down pin places the CDCE18005 into the power down state. Additionally, the CDCE18005 loads the contents of the EEPROM into RAM after the $\overline{\text{Power_Down}}$ pin is de-asserted; therefore, it is used to initialize the device after power is applied. SPI_LE signal has to be HIGH in order for EEPROM to load correctly during the rising edge of $\overline{\text{Power_Down}}$.

### $\overline{\text{SYNC}}$

The $\overline{\text{SYNC}}$ pin (Active LOW) has a complementary register location located in Device Register 8 bit 8. When enabled, Sync synchronizes all output dividers so that they begin counting simultaneously. Further, $\overline{\text{SYNC}}$ disables all outputs when in the active State.

## INPUT BLOCK

The Input Block includes two Universal Input Buffers, an Auxiliary Input. The Input Block drives three different clock signals onto the Internal Clock Distribution Bus.

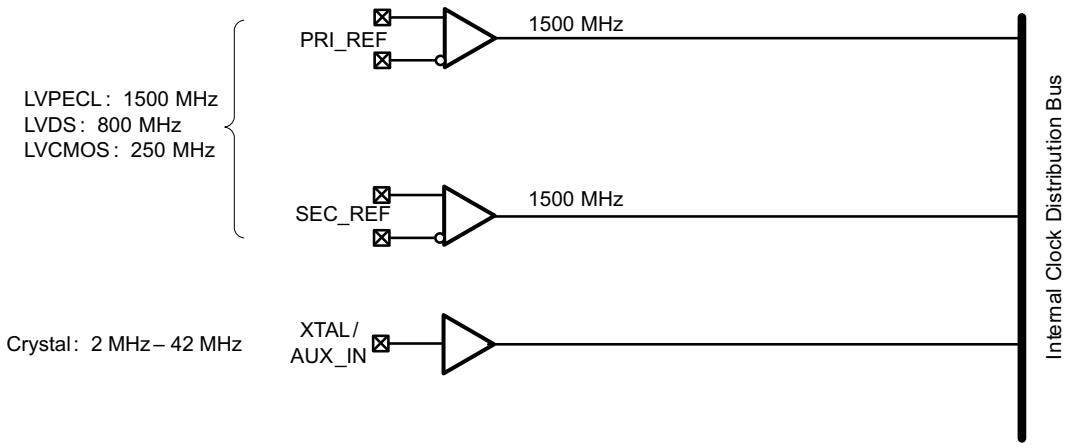


**Figure 21. CDCE18005 Input Block With References to Registers**


Copyright © 2008–2012, Texas Instruments Incorporated

### Universal Input Buffers (UIB)

Figure 22 shows the key elements of a universal input buffer. A UIB supports multiple formats along with different termination and coupling schemes. The CDCE18005 implements the UIB by including on board switched termination, a programmable bias voltage generator, and an output multiplexer. The CDCE18005 provides a high degree of configurability on the UIB to facilitate most existing clock input formats.

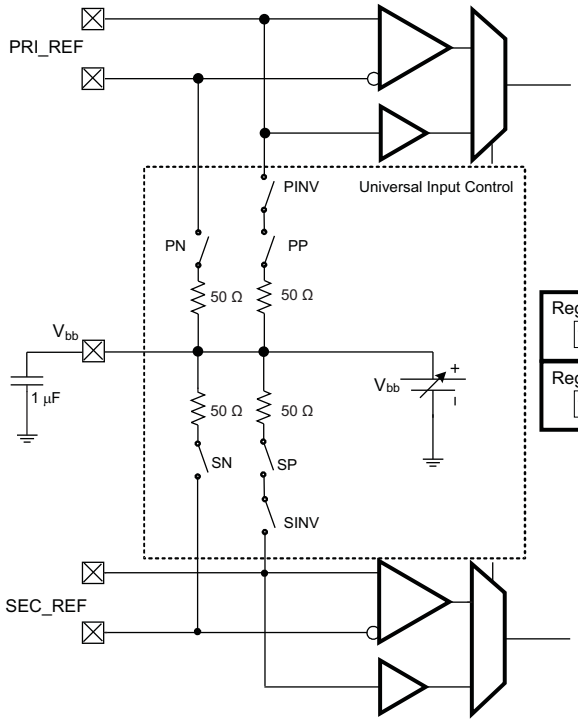


| Settings | | | Nominal Vbb |
|---|---|---|---|
| 5.1 | 5.0 | 5.6 | |
| INBUFSELY | INBUFSELX | ACDCSEL | |
| 1 | 0 | 0 | 1.9V |
| 1 | 0 | 1 | 1.2V |
| 1 | 1 | 0 | 1.2V |
| 1 | 1 | 1 | 1.2V |

Register 6

| 12 |
|---|

Register 5

| 10 | 9 | 8 | 7 | 6 | 1 | 0 |
|---|---|---|---|---|---|---|

| Settings | | | | SWITCH Status | | |
|---|---|---|---|---|---|---|
| 5.0 | 5.1 | 5.8, 6.12 | 5.9,5.10 | | | |
| INBUFSELX | INBUFSELY | TERMSEL | INVBB | P | N | INV |
| 0 | 0 | X | X | OFF | OFF | OFF |
| X | X | 1 | X | OFF | OFF | OFF |
| X | 1 | 0 | 0 | ON | ON | ON |
| X | 1 | 0 | 1 | ON | ON | OFF |

**Figure 22. CDCE18005 Universal Input Buffer**

Table 15 lists several settings for many possible clock input scenarios. Note that the two universal input buffers share the Vbb generator. Therefore, if both inputs use internal termination, they must use the same configuration mode (LVDS, LVPECL, or LVCMOS). If the application requires different modes (e.g. LVDS and LVPECL) then one of the two inputs must implement external termination.

**Table 15. CDCE18005 Universal Input Buffer Configuration Matrix**

| PRI_REF CONFIGURATION MATRIX | | | | | | | | | | | |
|---|---|---|---|---|---|---|---|---|---|---|---|
| | SETTINGS | | | | | | CONFIGURATION | | | | |
| Register.Bit → | 5.7 | 5.1 | 5.0 | 5.8 | 5.9 | 5.6 | | | | | |
| Bit Name → | HYSTEN | INBUFSELY | INBUFSELX | PRI_TERMSEL | PRIINVBB | ACDCSEL | Hysteresis | Mode | Coupling | Termination | Vbb |
| | 1 | 0 | 0 | X | X | X | ENABLED | LVCMOS | DC | N/A | — |
| | 1 | 1 | 0 | 0 | 0 | 0 | ENABLED | LVPECL | AC | Internal | 1.9V |
| | 1 | 1 | 0 | 0 | 0 | 1 | ENABLED | LVPECL | DC | Internal | 1.2V |
| | 1 | 1 | 0 | 1 | X | X | ENABLED | LVPECL | — | External | — |
| | 1 | 1 | 1 | 0 | 0 | 0 | ENABLED | LVDS | AC | Internal | 1.2V |
| | 1 | 1 | 1 | 0 | 0 | 1 | ENABLED | LVDS | DC | Internal | 1.2V |
| | 1 | 1 | 1 | 1 | X | X | ENABLED | LVDS | — | External | — |
| | 0 | X | X | X | X | X | OFF | — | — | — | — |
| | 1 | X | X | X | X | X | ENABLED | — | — | — | — |

**Table 15. CDCE18005 Universal Input Buffer Configuration Matrix (continued)**

| PRI_REF CONFIGURATION MATRIX | | | | | | | | | | | |
|---|---|---|---|---|---|---|---|---|---|---|---|
| | SETTINGS | | | | | | CONFIGURATION | | | | |
| Register.Bit → | 5.7 | 5.1 | 5.0 | 5.8 | 5.9 | 5.6 | | | | | |
| Bit Name → | HYSTEN | INBUFSELY | INBUFSELX | PRI_TERMSEL | PRIINVBB | ACDCSEL | Hysteresis | Mode | Coupling | Termination | Vbb |
| SEC_REF CONFIGURATION MATRIX | | | | | | | | | | | |
| | SETTINGS | | | | | | CONFIGURATION | | | | |
| Register.Bit → | 5.7 | 5.1 | 5.0 | 6.12 | 5.10 | 5.6 | | | | | |
| Bit Name → | HYSTEN | INBUFSELY | INBUFSELX | SEC_TERMSEL | SECINVBB | ACDCSEL | Hysteresis | Mode | Coupling | Termination | Vbb |
| | 1 | 0 | 0 | X | X | X | ENABLED | LVCMOS | DC | N/A | — |
| | 1 | 1 | 0 | 0 | 0 | 0 | ENABLED | LVPECL | AC | Internal | 1.9V |
| | 1 | 1 | 0 | 0 | 0 | 1 | ENABLED | LVPECL | DC | Internal | 1.2V |
| | 1 | 1 | 0 | 1 | X | X | ENABLED | LVPECL | — | External | — |
| | 1 | 1 | 1 | 0 | 0 | 0 | ENABLED | LVDS | AC | Internal | 1.2V |
| | 1 | 1 | 1 | 0 | 0 | 1 | ENABLED | LVDS | DC | Internal | 1.2V |
| | 1 | 1 | 1 | 1 | X | X | ENABLED | LVDS | — | External | — |
| | 0 | X | X | X | X | X | OFF | — | — | — | — |
| | 1 | X | X | X | X | X | ENABLED | — | — | — | — |

### LVDS Fail Safe Mode

Differential data line receivers can switch on noise in the absence of an input signal. This occurs when the clock driver is turned off or the interconnect is damaged or missing. Traditionally the solution to this problem involves incorporating an external resistor network on the receiver input. This network applies a steady-state bias voltage to the input pins. The additional cost of the external components notwithstanding, the use of such a network lowers input signal magnitude and thus reduces the differential noise margin. The CDCE18005 provides internal failsafe circuitry on all LVDS inputs if enabled as shown in Table 16 for DC termination only.

**Table 16. LVDS Failsafe Settings**

| Bit Name → Register.Bit → | FAILSAFE 5.11 | LVDS Failsafe |
|---|---|---|
| | 0 | Disabled for all inputs |
| | 1 | Enabled for all inputs |

## OUTPUT BLOCK

The output block includes five identical output channels. Each output channel comprises an output multiplexer, a clock divider module, and a universal output buffer as shown in Figure 23.

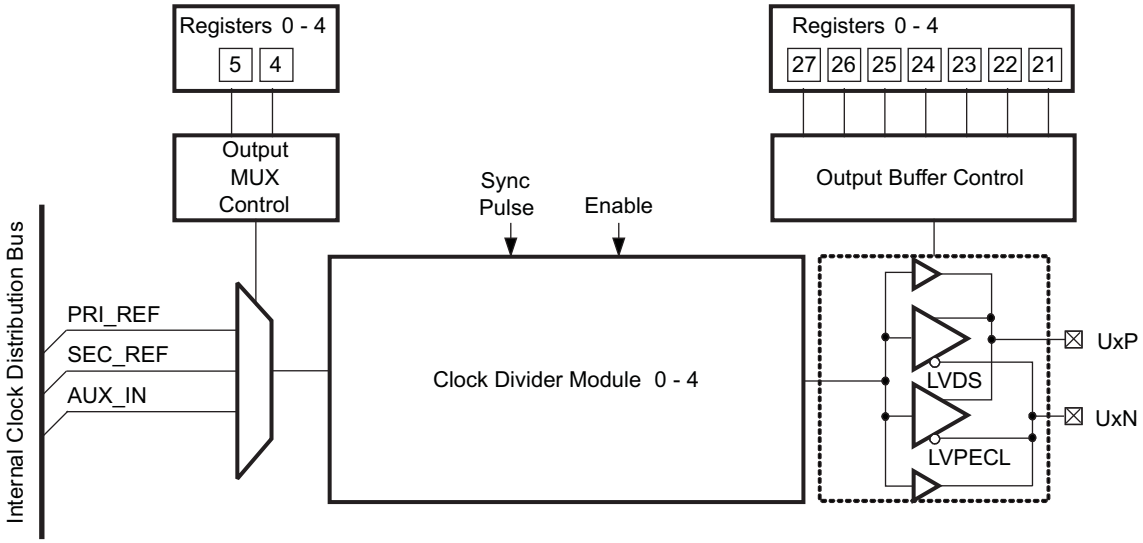


**Figure 23. CDCE18005 Output Channel**


Copyright © 2008–2012, Texas Instruments Incorporated

### Output Multiplexer Control

The output multiplexer selects which of the four clock sources available on the Internal Clock Distribution Bus will be presented to the Clock Divider Module. For a description of these clock sources, see Figure 21.

**Table 17. CDCE18005 Output Multiplexer Control Settings**

| OUTPUT MULTIPLEXER CONTROL | | |
|---|---|---|
| Register n (n = 0,1,2,3,4) | | |
| OUTMUXnSELX n.4 | OUTMUXnSELY n.5 | CLOCK SOURCE SELECTED |
| 0 | 0 | PRI_REF |
| 0 | 1 | SEC_REF |
| 1 | 0 | AUX_IN |
| 1 | 1 | Reserved |

### Output Buffer Control

Each of the five output channels includes a programmable output buffer; supporting LVPECL, LVDS, and LVCMOS modes. Table 18 lists the settings required to configure the CDCE18005 for each output type. Registers 0 through 4 correspond to Output Channels 0 through 4 respectively.

**Table 18. CDCE18005 Output Buffer Control Settings**

| OUTPUT BUFFER CONTROL | | | | | | OUTPUT TYPE |
|---|---|---|---|---|---|---|
| Register n (n = 0,1,2,3,4) | | | | | | |
| CMOSMODEnPX | CMOSMODEnPY | CMOSMODEnNX | CMOSMODEnNY | OUTBUFSELnX | OUTBUFSELnY | |
| n.22 | n.23 | n.24 | n.25 | n.26 | n.27 | |
| 0 | 0 | 0 | 0 | 0 | 1 | LVPECL |
| 0 | 1 | 0 | 1 | 1 | 1 | LVDS |
| See LVCMOS Output Buffer Configuration Settings | | | | 0 | 0 | LVCMOS |
| 0 | 1 | 0 | 1 | 1 | 0 | HI-Z |

### Output Buffer Control – LVCMOS Configurations

A LVCMOS output configuration requires additional configuration data. In the single ended configuration, each Output Channel provides a pair of outputs. The CDCE18005 supports four modes of operation for single ended outputs as listed in Table 19.

**Table 19. LVCMOS Output Buffer Configuration Settings**

| OUTPUT BUFFER CONTROL – LVCMOS CONFIGURATION | | | | | | Output Type | Pin | Output Mode |
|---|---|---|---|---|---|---|---|---|
| Register n (n = 0,1,2,3,4) | | | | | | | | |
| CMOSMODEnPX | CMOSMODEnPY | CMOSMODEnNX | CMOSMODEnNY | OUTBUFSELnX | OUTBUFSELnY | | | |
| n.22 | n.23 | n.24 | n.25 | n.26 | n.27 | | | |
| X | X | 0 | 0 | 0 | 0 | LVCMOS | Negative | Active – Non-inverted |
| X | X | 0 | 1 | 0 | 0 | LVCMOS | Negative | Hi-Z |
| X | X | 1 | 0 | 0 | 0 | LVCMOS | Negative | Active – Non-inverted |
| X | X | 1 | 1 | 0 | 0 | LVCMOS | Negative | Low |
| 0 | 0 | X | X | 0 | 0 | LVCMOS | Positive | Active – Non-inverted |
| 0 | 1 | X | X | 0 | 0 | LVCMOS | Positive | Hi-Z |
| 1 | 0 | X | X | 0 | 0 | LVCMOS | Positive | Active – Non-inverted |
| 1 | 1 | X | X | 0 | 0 | LVCMOS | Positive | Low |

Copyright © 2008–2012, Texas Instruments Incorporated

### Output Dividers

Figure 24 shows that each output channel provides a 7-bit divider and digital phase adjust block. Table 20 lists the divide ratios supported by the output divider for each output channel. The output divider's maximum input frequency is limited to 1.175GHz. If the divider is bypassed (divide ratio = 1) then the maximum frequency of the output channel is 1.5GHz.

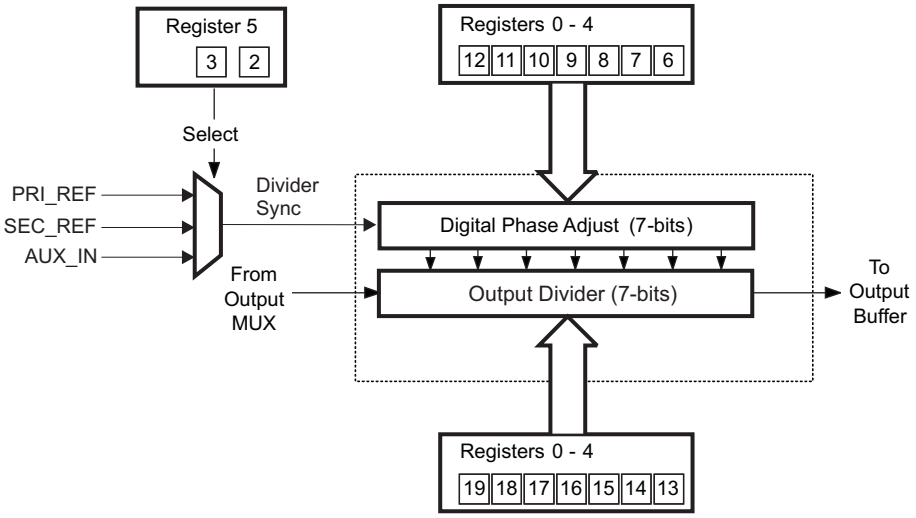


**Figure 24. CDCE18005 Output Divider and Phase Adjust**


Copyright © 2008–2012, Texas Instruments Incorporated

## Table 20. CDCE18005 Output Divider Settings

| OUTPUT DIVIDER n SETTINGS Register n (n = 0,1,2,3,4) | | | | | | | | | | Output Divide Ratio | |
|---|---|---|---|---|---|---|---|---|---|---|---|
| Multiplexer | | Integer Divider | | | Prescaler | | | Prescaler Setting | Integer Divider Setting | Output Channels 0–4 | Auxiliary Output |
| OUTnDIVSEL6 | OUTnDIVSEL5 | OUTnDIVSEL4 | OUTnDIVSEL3 | OUTnDIVSEL2 | OUTnDIVSEL1 | OutnDIVSEL0 | OUTnDIVSEL | | | | |
| n.19 | n.18 | n.17 | n.16 | n.15 | n.14 | n.13 | n.20 | | | | |
| X | X | X | X | X | X | X | 0 | | | OFF | OFF |
| 0 | 1 | 0 | 0 | 0 | 0 | 0 | 1 | – | – | 1 | OFF |
| 1 | 0 | 0 | 0 | 0 | 0 | 0 | 1 | 2 | – | 2** | 4 |
| 1 | 0 | 0 | 0 | 0 | 0 | 1 | 1 | 3 | – | 3** | 6 |
| 1 | 0 | 0 | 0 | 0 | 1 | 0 | 1 | 4 | – | 4 | 8 |
| 1 | 0 | 0 | 0 | 0 | 1 | 1 | 1 | 5 | – | 5 | 10 |
| 0 | 0 | 0 | 0 | 0 | 0 | 1 | 1 | 3 | 2 | 6 | 6 |
| 0 | 0 | 0 | 0 | 0 | 1 | 0 | 1 | 4 | 2 | 8 | 8 |
| 0 | 0 | 0 | 0 | 0 | 1 | 1 | 1 | 5 | 2 | 10 | 10 |
| 0 | 0 | 0 | 0 | 1 | 0 | 1 | 1 | 3 | 4 | 12 | 12 |
| 0 | 0 | 0 | 0 | 1 | 1 | 0 | 1 | 4 | 4 | 16 | 16 |
| 0 | 0 | 0 | 0 | 1 | 1 | 1 | 1 | 5 | 4 | 20 | 20 |
| 0 | 0 | 0 | 1 | 0 | 0 | 1 | 1 | 3 | 6 | 18 | 18 |
| 0 | 0 | 0 | 1 | 0 | 1 | 0 | 1 | 4 | 6 | 24 | 24 |
| 0 | 0 | 0 | 1 | 0 | 1 | 1 | 1 | 5 | 6 | 30 | 30 |
| 0 | 0 | 0 | 1 | 1 | 1 | 0 | 1 | 4 | 8 | 32 | 32 |
| 0 | 0 | 0 | 1 | 1 | 1 | 1 | 1 | 5 | 8 | 40 | 40 |
| 0 | 0 | 1 | 0 | 0 | 1 | 1 | 1 | 5 | 10 | 50 | 50 |
| 0 | 0 | 1 | 0 | 1 | 0 | 1 | 1 | 3 | 12 | 36 | 36 |
| 0 | 0 | 1 | 0 | 1 | 1 | 0 | 1 | 4 | 12 | 48 | 48 |
| 0 | 0 | 1 | 0 | 1 | 1 | 1 | 1 | 5 | 12 | 60 | 60 |
| 0 | 0 | 1 | 1 | 0 | 0 | 0 | 1 | 2 | 14 | 28 | 28 |
| 0 | 0 | 1 | 1 | 0 | 0 | 1 | 1 | 3 | 14 | 42 | 42 |
| 0 | 0 | 1 | 1 | 0 | 1 | 0 | 1 | 4 | 14 | 56 | 56 |
| 0 | 0 | 1 | 1 | 0 | 1 | 1 | 1 | 5 | 14 | 70 | 70 |
| 0 | 0 | 1 | 1 | 1 | 1 | 0 | 1 | 4 | 16 | 64 | 64 |
| 0 | 0 | 1 | 1 | 1 | 1 | 1 | 1 | 5 | 16 | 80 | 80 |

**Output channel 2 or 3 determine the auxiliary output divide ratio. For example, if the auxiliary output is programmed to drive via output 2 and output 2 divider is programmed to divide by 3, then the divide ratio for the auxiliary output will be 6.

### Digital Phase Adjust

Figure 25 provides an overview of the Digital Phase Adjust feature. The output divider includes a coarse phase adjust that shifts the divided clock signal that drives the output buffer. Essentially, the Digital Phase Adjust timer delays when the output divider starts dividing; thereby shifting the phase of the output clock. The phase adjust resolution is a function of the divide function. Coarse phase adjust parameters include:

- Number of Phase Delay Steps – the number of phase delay steps available is equal to the divide ratio selected. For example, if a Divide by 4 is selected, then the Digital Phase Adjust can be programmed to select when the output divider changes state based upon selecting one of the four counts on the input. Figure 25 shows an example of divide by 16 in which there are 16 rising edges of Clock IN at which the output divider changes state (this particular example shows the fourth edge shifting the output by one fourth of the period of the output).
- Phase Delay Step Size – the step size is determined by the number of phase delay steps according to the following equations:

$$\text{Stepsize(deg)} = \frac{360 \text{ degrees}}{\text{OutputDivideRatio}} \tag{1}$$

$$\text{Stepsize(sec)} = \frac{\frac{1}{f_{\text{ClockIN}}}}{\text{OutputDivideRatio}} \tag{2}$$

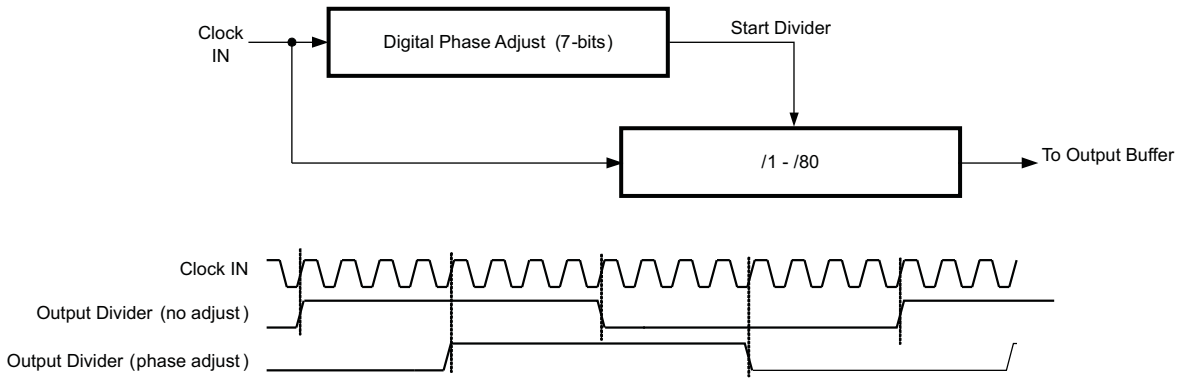


**Figure 25. CDCE18005 Phase Adjust**

### Phase Adjust example

**Given:**

Output Frequency: 30.72 MHz
Input Frequency: 491.52 MHz
Output Divider Setting: 16

$$\text{Stepsize(deg)} = \frac{360}{16} = 22.5^\circ/\text{Step} \tag{3}$$

The tables that follow provide a list of valid register settings for the digital phase adjust blocks.


Copyright © 2008–2012, Texas Instruments Incorporated

## Table 21. CDCE18005 Output Coarse Phase Adjust Settings (1)

| Divide Ratio | PHnADGC6 | PHnADGC5 | PHnADGC4 | PHnADGC3 | PHnADGC2 | PHnADGC1 | PHnADGC0 | Phase Delay |
|---|---|---|---|---|---|---|---|---|
| | n.12 | n.11 | n.10 | n.9 | n.8 | n.7 | n.6 | (radian) |
| 1 | 0 | 0 | 0 | 0 | 0 | 0 | 0 | 0 |
| 2 | 0 | 0 | 0 | 0 | 0 | 0 | 0 | 0 |
| | 0 | 0 | 0 | 0 | 0 | 0 | 1 | (2π/2) |
| 3 | 0 | 0 | 0 | 0 | 0 | 0 | 0 | 0 |
| | 0 | 0 | 0 | 0 | 0 | 0 | 1 | (2π/3) |
| | 0 | 0 | 0 | 0 | 0 | 1 | 0 | 2(2π/3) |
| 4 | 0 | 0 | 0 | 0 | 0 | 0 | 0 | 0 |
| | 0 | 0 | 0 | 0 | 0 | 0 | 1 | (2π/4) |
| | 0 | 0 | 0 | 0 | 0 | 1 | 0 | 2(2π/4) |
| | 0 | 0 | 0 | 0 | 0 | 1 | 1 | 3(2π/4) |
| 5 | 0 | 0 | 0 | 0 | 0 | 0 | 0 | 0 |
| | 0 | 0 | 0 | 0 | 0 | 0 | 1 | (2π/5) |
| | 0 | 0 | 0 | 0 | 0 | 1 | 0 | 2(2π/5) |
| | 0 | 0 | 0 | 0 | 0 | 1 | 1 | 3(2π/5) |
| | 0 | 0 | 0 | 0 | 1 | 0 | 0 | 4(2π/5) |
| 6 | 0 | 0 | 0 | 0 | 0 | 0 | 0 | 0 |
| | 0 | 0 | 0 | 0 | 0 | 0 | 1 | (2π/6) |
| | 0 | 0 | 0 | 0 | 0 | 1 | 0 | 2(2π/6) |
| | 1 | 0 | 0 | 0 | 0 | 0 | 0 | 3(2π/6) |
| | 1 | 0 | 0 | 0 | 0 | 0 | 1 | 4(2π/6) |
| | 1 | 0 | 0 | 0 | 0 | 1 | 0 | 5(2π/6) |
| 8 | 0 | 0 | 0 | 0 | 0 | 0 | 0 | 0 |
| | 0 | 0 | 0 | 0 | 0 | 0 | 1 | (2π/8) |
| | 0 | 0 | 0 | 0 | 0 | 1 | 0 | 2(2π/8) |
| | 0 | 0 | 0 | 0 | 0 | 1 | 1 | 3(2π/8) |
| | 1 | 0 | 0 | 0 | 0 | 0 | 0 | 4(2π/8) |
| | 1 | 0 | 0 | 0 | 0 | 0 | 1 | 5(2π/8) |
| | 1 | 0 | 0 | 0 | 0 | 1 | 0 | 6(2π/8) |
| | 1 | 0 | 0 | 0 | 0 | 1 | 1 | 7(2π/8) |
| 10 | 0 | 0 | 0 | 0 | 0 | 0 | 0 | 0 |
| | 0 | 0 | 0 | 0 | 0 | 0 | 1 | (2π/10) |
| | 0 | 0 | 0 | 0 | 0 | 1 | 0 | 2(2π/10) |
| | 0 | 0 | 0 | 0 | 0 | 1 | 1 | 3(2π/10) |
| | 0 | 0 | 0 | 0 | 1 | 0 | 0 | 4(2π/10) |
| | 1 | 0 | 0 | 0 | 0 | 0 | 0 | 5(2π/10) |
| | 1 | 0 | 0 | 0 | 0 | 0 | 1 | 6(2π/10) |
| | 1 | 0 | 0 | 0 | 0 | 1 | 0 | 7(2π/10) |
| | 1 | 0 | 0 | 0 | 0 | 1 | 1 | 8(2π/10) |
| | 1 | 0 | 0 | 0 | 1 | 0 | 0 | 9(2π/10) |
| 12 | 0 | 0 | 0 | 0 | 0 | 0 | 0 | 0 |
| | 0 | 0 | 0 | 0 | 0 | 0 | 1 | (2π/12) |
| | 0 | 0 | 0 | 0 | 0 | 1 | 0 | 2(2π/12) |
| | 0 | 0 | 0 | 1 | 0 | 0 | 0 | 3(2π/12) |
| | 0 | 0 | 0 | 1 | 0 | 0 | 1 | 4(2π/12) |
| | 0 | 0 | 0 | 1 | 0 | 1 | 0 | 5(2π/12) |
| | 0 | 0 | 1 | 0 | 0 | 0 | 0 | 6(2π/12) |
| | 0 | 0 | 1 | 0 | 0 | 0 | 1 | 7(2π/12) |
| | 0 | 0 | 1 | 0 | 0 | 1 | 0 | 8(2π/12) |
| | 0 | 0 | 1 | 1 | 0 | 0 | 0 | 9(2π/12) |
| | 0 | 0 | 1 | 1 | 0 | 0 | 1 | 10(2π/12) |
| | 0 | 0 | 1 | 1 | 0 | 1 | 0 | 11(2π/12) |
| 16 | 0 | 0 | 0 | 0 | 0 | 0 | 0 | 0 |
| | 0 | 0 | 0 | 0 | 0 | 0 | 1 | (2π/16) |
| | 0 | 0 | 0 | 0 | 0 | 1 | 0 | 2(2π/16) |
| | 0 | 0 | 0 | 0 | 0 | 1 | 1 | 3(2π/16) |
| | 0 | 0 | 0 | 1 | 0 | 0 | 0 | 4(2π/16) |
| | 0 | 0 | 0 | 1 | 0 | 0 | 1 | 5(2π/16) |
| | 0 | 0 | 0 | 1 | 0 | 1 | 0 | 6(2π/16) |
| | 0 | 0 | 0 | 1 | 0 | 1 | 1 | 7(2π/16) |
| | 0 | 0 | 1 | 0 | 0 | 0 | 0 | 8(2π/16) |
| | 0 | 0 | 1 | 0 | 0 | 0 | 1 | 9(2π/16) |
| | 0 | 0 | 1 | 0 | 0 | 1 | 0 | 10(2π/16) |
| | 0 | 0 | 1 | 0 | 0 | 1 | 1 | 11(2π/16) |
| | 0 | 0 | 1 | 1 | 0 | 0 | 0 | 12(2π/16) |
| | 0 | 0 | 1 | 1 | 0 | 0 | 1 | 13(2π/16) |
| | 0 | 0 | 1 | 1 | 0 | 1 | 0 | 14(2π/16) |
| | 0 | 0 | 1 | 1 | 0 | 1 | 1 | 15(2π/16) |
| 18 | 0 | 0 | 0 | 0 | 0 | 0 | 0 | 0 |
| | 0 | 0 | 0 | 0 | 0 | 0 | 1 | (2π/18) |
| | 0 | 0 | 0 | 0 | 0 | 1 | 0 | 2(2π/18) |
| | 0 | 0 | 0 | 1 | 0 | 0 | 0 | 3(2π/18) |
| | 0 | 0 | 0 | 1 | 0 | 0 | 1 | 4(2π/18) |
| | 0 | 0 | 0 | 1 | 0 | 1 | 0 | 5(2π/18) |
| | 0 | 0 | 1 | 0 | 0 | 0 | 0 | 6(2π/18) |
| | 0 | 0 | 1 | 0 | 0 | 0 | 1 | 7(2π/18) |
| | 0 | 0 | 1 | 0 | 0 | 1 | 0 | 8(2π/18) |
| | 0 | 0 | 1 | 1 | 0 | 0 | 0 | 9(2π/18) |
| | 0 | 0 | 1 | 1 | 0 | 0 | 1 | 10(2π/18) |
| | 0 | 0 | 1 | 1 | 0 | 1 | 0 | 11(2π/18) |
| | 0 | 1 | 0 | 0 | 0 | 0 | 0 | 12(2π/18) |
| | 0 | 1 | 0 | 0 | 0 | 0 | 1 | 13(2π/18) |
| | 0 | 1 | 0 | 0 | 0 | 1 | 0 | 14(2π/18) |
| | 0 | 1 | 0 | 1 | 0 | 0 | 0 | 15(2π/18) |
| | 0 | 1 | 0 | 1 | 0 | 0 | 1 | 16(2π/18) |
| | 0 | 1 | 0 | 1 | 0 | 1 | 0 | 17(2π/18) |
| 20 | 0 | 0 | 0 | 0 | 0 | 0 | 0 | 0 |
| | 0 | 0 | 0 | 0 | 0 | 0 | 1 | (2π/20) |
| | 0 | 0 | 0 | 0 | 0 | 1 | 0 | 2(2π/20) |
| | 0 | 0 | 0 | 0 | 0 | 1 | 1 | 3(2π/20) |
| | 0 | 0 | 0 | 0 | 1 | 0 | 0 | 4(2π/20) |
| | 0 | 0 | 0 | 1 | 0 | 0 | 0 | 5(2π/20) |
| | 0 | 0 | 0 | 1 | 0 | 0 | 1 | 6(2π/20) |
| | 0 | 0 | 0 | 1 | 0 | 1 | 0 | 7(2π/20) |
| | 0 | 0 | 0 | 1 | 0 | 1 | 1 | 8(2π/20) |
| | 0 | 0 | 0 | 1 | 1 | 0 | 0 | 9(2π/20) |
| | 0 | 0 | 1 | 0 | 0 | 0 | 0 | 10(2π/20) |
| | 0 | 0 | 1 | 0 | 0 | 0 | 1 | 11(2π/20) |
| | 0 | 0 | 1 | 0 | 0 | 1 | 0 | 12(2π/20) |
| | 0 | 0 | 1 | 0 | 0 | 1 | 1 | 13(2π/20) |
| | 0 | 0 | 1 | 0 | 1 | 0 | 0 | 14(2π/20) |
| | 0 | 0 | 1 | 1 | 0 | 0 | 0 | 15(2π/20) |
| | 0 | 0 | 1 | 1 | 0 | 0 | 1 | 16(2π/20) |
| | 0 | 0 | 1 | 1 | 0 | 1 | 0 | 17(2π/20) |
| | 0 | 0 | 1 | 1 | 0 | 1 | 1 | 18(2π/20) |
| | 0 | 0 | 1 | 1 | 1 | 0 | 0 | 19(2π/20) |
| 24 | 0 | 0 | 0 | 0 | 0 | 0 | 0 | 0 |
| | 0 | 0 | 0 | 0 | 0 | 0 | 1 | (2π/24) |
| | 0 | 0 | 0 | 0 | 0 | 1 | 0 | 2(2π/24) |
| | 0 | 0 | 0 | 0 | 0 | 1 | 1 | 3(2π/24) |
| | 0 | 0 | 0 | 1 | 0 | 0 | 0 | 4(2π/24) |
| | 0 | 0 | 0 | 1 | 0 | 0 | 1 | 5(2π/24) |
| | 0 | 0 | 0 | 1 | 0 | 1 | 0 | 6(2π/24) |
| | 0 | 0 | 0 | 1 | 0 | 1 | 1 | 7(2π/24) |
| | 0 | 0 | 1 | 0 | 0 | 0 | 0 | 8(2π/24) |
| | 0 | 0 | 1 | 0 | 0 | 0 | 1 | 9(2π/24) |
| | 0 | 0 | 1 | 0 | 0 | 1 | 0 | 10(2π/24) |
| | 0 | 0 | 1 | 0 | 0 | 1 | 1 | 11(2π/24) |
| | 0 | 0 | 1 | 1 | 0 | 0 | 0 | 12(2π/24) |
| | 0 | 0 | 1 | 1 | 0 | 0 | 1 | 13(2π/24) |
| | 0 | 0 | 1 | 1 | 0 | 1 | 0 | 14(2π/24) |
| | 0 | 0 | 1 | 1 | 0 | 1 | 1 | 15(2π/24) |
| | 0 | 1 | 0 | 0 | 0 | 0 | 0 | 16(2π/24) |
| | 0 | 1 | 0 | 0 | 0 | 0 | 1 | 17(2π/24) |
| | 0 | 1 | 0 | 0 | 0 | 1 | 0 | 18(2π/24) |
| | 0 | 1 | 0 | 0 | 0 | 1 | 1 | 19(2π/24) |
| | 0 | 1 | 0 | 1 | 0 | 0 | 0 | 20(2π/24) |
| | 0 | 1 | 0 | 1 | 0 | 0 | 1 | 21(2π/24) |
| | 0 | 1 | 0 | 1 | 0 | 1 | 0 | 22(2π/24) |
| | 0 | 1 | 0 | 1 | 0 | 1 | 1 | 23(2π/24) |

## Table 22. CDCE18005 Output Coarse Phase Adjust Settings (2)

| Divide Ratio | PHnADGC6 | PHnADGC5 | PHnADGC4 | PHnADGC3 | PHnADGC2 | PHnADGC1 | PHnADGC0 | Phase Delay |
|---|---|---|---|---|---|---|---|---|
| | n.12 | n.11 | n.10 | n.9 | n.8 | n.7 | n.6 | (radian) |
| 28 | 0 | 0 | 0 | 0 | 0 | 0 | 0 | 0 |
| | 0 | 0 | 0 | 0 | 0 | 0 | 1 | (2π/28) |
| | 0 | 0 | 0 | 1 | 0 | 0 | 0 | 2(2π/28) |
| | 0 | 0 | 0 | 1 | 0 | 0 | 1 | 3(2π/28) |
| | 0 | 0 | 1 | 0 | 0 | 0 | 0 | 4(2π/28) |
| | 0 | 0 | 1 | 0 | 0 | 0 | 1 | 5(2π/28) |
| | 0 | 0 | 1 | 1 | 0 | 0 | 0 | 6(2π/28) |
| | 0 | 0 | 1 | 1 | 0 | 0 | 1 | 7(2π/28) |
| | 0 | 1 | 0 | 0 | 0 | 0 | 0 | 8(2π/28) |
| | 0 | 1 | 0 | 0 | 0 | 0 | 1 | 9(2π/28) |
| | 0 | 1 | 0 | 1 | 0 | 0 | 0 | 10(2π/28) |
| | 0 | 1 | 0 | 1 | 0 | 0 | 1 | 11(2π/28) |
| | 0 | 1 | 1 | 0 | 0 | 0 | 0 | 12(2π/28) |
| | 0 | 1 | 1 | 0 | 0 | 0 | 1 | 13(2π/28) |
| | 1 | 0 | 0 | 0 | 0 | 0 | 0 | 14(2π/28) |
| | 1 | 0 | 0 | 0 | 0 | 0 | 1 | 15(2π/28) |
| | 1 | 0 | 0 | 1 | 0 | 0 | 0 | 16(2π/28) |
| | 1 | 0 | 0 | 1 | 0 | 0 | 1 | 17(2π/28) |
| | 1 | 0 | 1 | 0 | 0 | 0 | 0 | 18(2π/28) |
| | 1 | 0 | 1 | 0 | 0 | 0 | 1 | 19(2π/28) |
| | 1 | 0 | 1 | 1 | 0 | 0 | 0 | 20(2π/28) |
| | 1 | 0 | 1 | 1 | 0 | 0 | 1 | 21(2π/28) |
| | 1 | 1 | 0 | 0 | 0 | 0 | 0 | 22(2π/28) |
| | 1 | 1 | 0 | 0 | 0 | 0 | 1 | 23(2π/28) |
| | 1 | 1 | 0 | 1 | 0 | 0 | 0 | 24(2π/28) |
| | 1 | 1 | 0 | 1 | 0 | 0 | 1 | 25(2π/28) |
| | 1 | 1 | 1 | 0 | 0 | 0 | 0 | 26(2π/28) |
| | 1 | 1 | 1 | 0 | 0 | 0 | 1 | 27(2π/28) |
| 30 | 0 | 0 | 0 | 0 | 0 | 0 | 0 | 0 |
| | 0 | 0 | 0 | 0 | 0 | 0 | 1 | (2π/30) |
| | 0 | 0 | 0 | 0 | 0 | 1 | 0 | 2(2π/30) |
| | 0 | 0 | 0 | 0 | 0 | 1 | 1 | 3(2π/30) |
| | 0 | 0 | 0 | 0 | 1 | 0 | 0 | 4(2π/30) |
| | 0 | 0 | 0 | 1 | 0 | 0 | 0 | 5(2π/30) |
| | 0 | 0 | 0 | 1 | 0 | 0 | 1 | 6(2π/30) |
| | 0 | 0 | 0 | 1 | 0 | 1 | 0 | 7(2π/30) |
| | 0 | 0 | 0 | 1 | 0 | 1 | 1 | 8(2π/30) |
| | 0 | 0 | 0 | 1 | 1 | 0 | 0 | 9(2π/30) |
| | 0 | 0 | 1 | 0 | 0 | 0 | 0 | 10(2π/30) |
| | 0 | 0 | 1 | 0 | 0 | 0 | 1 | 11(2π/30) |
| | 0 | 0 | 1 | 0 | 0 | 1 | 0 | 12(2π/30) |
| | 0 | 0 | 1 | 0 | 0 | 1 | 1 | 13(2π/30) |
| | 0 | 0 | 1 | 0 | 1 | 0 | 0 | 14(2π/30) |
| | 0 | 0 | 1 | 1 | 0 | 0 | 0 | 15(2π/30) |
| | 0 | 0 | 1 | 1 | 0 | 0 | 1 | 16(2π/30) |
| | 0 | 0 | 1 | 1 | 0 | 1 | 0 | 17(2π/30) |
| | 0 | 0 | 1 | 1 | 0 | 1 | 1 | 18(2π/30) |
| | 0 | 0 | 1 | 1 | 1 | 0 | 0 | 19(2π/30) |
| | 0 | 1 | 0 | 0 | 0 | 0 | 0 | 20(2π/30) |
| | 0 | 1 | 0 | 0 | 0 | 0 | 1 | 21(2π/30) |
| | 0 | 1 | 0 | 0 | 0 | 1 | 0 | 22(2π/30) |
| | 0 | 1 | 0 | 0 | 0 | 1 | 1 | 23(2π/30) |
| | 0 | 1 | 0 | 0 | 1 | 0 | 0 | 24(2π/30) |
| | 0 | 1 | 0 | 1 | 0 | 0 | 0 | 25(2π/30) |
| | 0 | 1 | 0 | 1 | 0 | 0 | 1 | 26(2π/30) |
| | 0 | 1 | 0 | 1 | 0 | 1 | 0 | 27(2π/30) |
| | 0 | 1 | 0 | 1 | 0 | 1 | 1 | 28(2π/30) |
| | 0 | 1 | 0 | 1 | 1 | 0 | 0 | 29(2π/30) |

| Divide Ratio | PHnADGC6 | PHnADGC5 | PHnADGC4 | PHnADGC3 | PHnADGC2 | PHnADGC1 | PHnADGC0 | Phase Delay |
|---|---|---|---|---|---|---|---|---|
| | n.12 | n.11 | n.10 | n.9 | n.8 | n.7 | n.6 | (radian) |
| 32 | 0 | 0 | 0 | 0 | 0 | 0 | 0 | 0 |
| | 0 | 0 | 0 | 0 | 0 | 0 | 1 | (2π/32) |
| | 0 | 0 | 0 | 0 | 0 | 1 | 0 | 2(2π/32) |
| | 0 | 0 | 0 | 0 | 0 | 1 | 1 | 3(2π/32) |
| | 0 | 0 | 0 | 1 | 0 | 0 | 0 | 4(2π/32) |
| | 0 | 0 | 0 | 1 | 0 | 0 | 1 | 5(2π/32) |
| | 0 | 0 | 0 | 1 | 0 | 1 | 0 | 6(2π/32) |
| | 0 | 0 | 0 | 1 | 0 | 1 | 1 | 7(2π/32) |
| | 0 | 0 | 1 | 0 | 0 | 0 | 0 | 8(2π/32) |
| | 0 | 0 | 1 | 0 | 0 | 0 | 1 | 9(2π/32) |
| | 0 | 0 | 1 | 0 | 0 | 1 | 0 | 10(2π/32) |
| | 0 | 0 | 1 | 0 | 0 | 1 | 1 | 11(2π/32) |
| | 0 | 0 | 1 | 1 | 0 | 0 | 0 | 12(2π/32) |
| | 0 | 0 | 1 | 1 | 0 | 0 | 1 | 13(2π/32) |
| | 0 | 0 | 1 | 1 | 0 | 1 | 0 | 14(2π/32) |
| | 0 | 0 | 1 | 1 | 0 | 1 | 1 | 15(2π/32) |
| | 0 | 1 | 0 | 0 | 0 | 0 | 0 | 16(2π/32) |
| | 0 | 1 | 0 | 0 | 0 | 0 | 1 | 17(2π/32) |
| | 0 | 1 | 0 | 0 | 0 | 1 | 0 | 18(2π/32) |
| | 0 | 1 | 0 | 0 | 0 | 1 | 1 | 19(2π/32) |
| | 0 | 1 | 0 | 1 | 0 | 0 | 0 | 20(2π/32) |
| | 0 | 1 | 0 | 1 | 0 | 0 | 1 | 21(2π/32) |
| | 0 | 1 | 0 | 1 | 0 | 1 | 0 | 22(2π/32) |
| | 0 | 1 | 0 | 1 | 0 | 1 | 1 | 23(2π/32) |
| | 0 | 1 | 1 | 0 | 0 | 0 | 0 | 24(2π/32) |
| | 0 | 1 | 1 | 0 | 0 | 0 | 1 | 25(2π/32) |
| | 0 | 1 | 1 | 0 | 0 | 1 | 0 | 26(2π/32) |
| | 0 | 1 | 1 | 0 | 0 | 1 | 1 | 27(2π/32) |
| | 0 | 1 | 1 | 1 | 0 | 0 | 0 | 28(2π/32) |
| | 0 | 1 | 1 | 1 | 0 | 0 | 1 | 29(2π/32) |
| | 0 | 1 | 1 | 1 | 0 | 1 | 0 | 30(2π/32) |
| | 0 | 1 | 1 | 1 | 0 | 1 | 1 | 31(2π/32) |
| 36 | 0 | 0 | 0 | 0 | 0 | 0 | 0 | 0 |
| | 0 | 0 | 0 | 0 | 0 | 0 | 1 | (2π/36) |
| | 0 | 0 | 0 | 0 | 0 | 1 | 0 | 2(2π/36) |
| | 0 | 0 | 0 | 1 | 0 | 0 | 0 | 3(2π/36) |
| | 0 | 0 | 0 | 1 | 0 | 0 | 1 | 4(2π/36) |
| | 0 | 0 | 0 | 1 | 0 | 1 | 0 | 5(2π/36) |
| | 0 | 0 | 1 | 0 | 0 | 0 | 0 | 6(2π/36) |
| | 0 | 0 | 1 | 0 | 0 | 0 | 1 | 7(2π/36) |
| | 0 | 0 | 1 | 0 | 0 | 1 | 0 | 8(2π/36) |
| | 0 | 0 | 1 | 1 | 0 | 0 | 0 | 9(2π/36) |
| | 0 | 0 | 1 | 1 | 0 | 0 | 1 | 10(2π/36) |
| | 0 | 0 | 1 | 1 | 0 | 1 | 0 | 11(2π/36) |
| | 0 | 1 | 0 | 0 | 0 | 0 | 0 | 12(2π/36) |
| | 0 | 1 | 0 | 0 | 0 | 0 | 1 | 13(2π/36) |
| | 0 | 1 | 0 | 0 | 0 | 1 | 0 | 14(2π/36) |
| | 0 | 1 | 0 | 1 | 0 | 0 | 0 | 15(2π/36) |
| | 0 | 1 | 0 | 1 | 0 | 0 | 1 | 16(2π/36) |
| | 0 | 1 | 0 | 1 | 0 | 1 | 0 | 17(2π/36) |
| | 1 | 0 | 0 | 0 | 0 | 0 | 0 | 18(2π/36) |
| | 1 | 0 | 0 | 0 | 0 | 0 | 1 | 19(2π/36) |
| | 1 | 0 | 0 | 0 | 0 | 1 | 0 | 20(2π/36) |
| | 1 | 0 | 0 | 1 | 0 | 0 | 0 | 21(2π/36) |
| | 1 | 0 | 0 | 1 | 0 | 0 | 1 | 22(2π/36) |
| | 1 | 0 | 0 | 1 | 0 | 1 | 0 | 23(2π/36) |
| | 1 | 0 | 1 | 0 | 0 | 0 | 0 | 24(2π/36) |
| | 1 | 0 | 1 | 0 | 0 | 0 | 1 | 25(2π/36) |
| | 1 | 0 | 1 | 0 | 0 | 1 | 0 | 26(2π/36) |
| | 1 | 0 | 1 | 1 | 0 | 0 | 0 | 27(2π/36) |
| | 1 | 0 | 1 | 1 | 0 | 0 | 1 | 28(2π/36) |
| | 1 | 0 | 1 | 1 | 0 | 1 | 0 | 29(2π/36) |
| | 1 | 1 | 0 | 0 | 0 | 0 | 0 | 30(2π/36) |
| | 1 | 1 | 0 | 0 | 0 | 0 | 1 | 31(2π/36) |
| | 1 | 1 | 0 | 0 | 0 | 1 | 0 | 32(2π/36) |
| | 1 | 1 | 0 | 1 | 0 | 0 | 0 | 33(2π/36) |
| | 1 | 1 | 0 | 1 | 0 | 0 | 1 | 34(2π/36) |
| | 1 | 1 | 0 | 1 | 0 | 1 | 0 | 35(2π/36) |


Copyright © 2008–2012, Texas Instruments Incorporated

## Table 23. CDCE18005 Output Coarse Phase Adjust Settings (3)

| Divide Ratio | PHnADGC6 | PHnADGC5 | PHnADGC4 | PHnADGC3 | PHnADGC2 | PHnADGC1 | PHnADGC0 | Phase Delay |
|---|---|---|---|---|---|---|---|---|
| | n.12 | n.11 | n.10 | n.9 | n.8 | n.7 | n.6 | (radian) |
| 40 | 0 | 0 | 0 | 0 | 0 | 0 | 0 | 0 |
| | 0 | 0 | 0 | 0 | 0 | 0 | 1 | (2π/40) |
| | 0 | 0 | 0 | 0 | 0 | 1 | 0 | 2(2π/40) |
| | 0 | 0 | 0 | 0 | 0 | 1 | 1 | 3(2π/40) |
| | 0 | 0 | 0 | 0 | 1 | 0 | 0 | 4(2π/40) |
| | 0 | 0 | 0 | 1 | 0 | 0 | 0 | 5(2π/40) |
| | 0 | 0 | 0 | 1 | 0 | 0 | 1 | 6(2π/40) |
| | 0 | 0 | 0 | 1 | 0 | 1 | 0 | 7(2π/40) |
| | 0 | 0 | 0 | 1 | 0 | 1 | 1 | 8(2π/40) |
| | 0 | 0 | 0 | 1 | 1 | 0 | 0 | 9(2π/40) |
| | 0 | 0 | 1 | 0 | 0 | 0 | 0 | 10(2π/40) |
| | 0 | 0 | 1 | 0 | 0 | 0 | 1 | 11(2π/40) |
| | 0 | 0 | 1 | 0 | 0 | 1 | 0 | 12(2π/40) |
| | 0 | 0 | 1 | 0 | 0 | 1 | 1 | 13(2π/40) |
| | 0 | 0 | 1 | 0 | 1 | 0 | 0 | 14(2π/40) |
| | 0 | 0 | 1 | 1 | 0 | 0 | 0 | 15(2π/40) |
| | 0 | 0 | 1 | 1 | 0 | 0 | 1 | 16(2π/40) |
| | 0 | 0 | 1 | 1 | 0 | 1 | 0 | 17(2π/40) |
| | 0 | 0 | 1 | 1 | 0 | 1 | 1 | 18(2π/40) |
| | 0 | 0 | 1 | 1 | 1 | 0 | 0 | 19(2π/40) |
| | 0 | 1 | 0 | 0 | 0 | 0 | 0 | 20(2π/40) |
| | 0 | 1 | 0 | 0 | 0 | 0 | 1 | 21(2π/40) |
| | 0 | 1 | 0 | 0 | 0 | 1 | 0 | 22(2π/40) |
| | 0 | 1 | 0 | 0 | 0 | 1 | 1 | 23(2π/40) |
| | 0 | 1 | 0 | 0 | 1 | 0 | 0 | 24(2π/40) |
| | 0 | 1 | 0 | 1 | 0 | 0 | 0 | 25(2π/40) |
| | 0 | 1 | 0 | 1 | 0 | 0 | 1 | 26(2π/40) |
| | 0 | 1 | 0 | 1 | 0 | 1 | 0 | 27(2π/40) |
| | 0 | 1 | 0 | 1 | 0 | 1 | 1 | 28(2π/40) |
| | 0 | 1 | 0 | 1 | 1 | 0 | 0 | 29(2π/40) |
| | 0 | 1 | 1 | 0 | 0 | 0 | 0 | 30(2π/40) |
| | 0 | 1 | 1 | 0 | 0 | 0 | 1 | 31(2π/40) |
| | 0 | 1 | 1 | 0 | 0 | 1 | 0 | 32(2π/40) |
| | 0 | 1 | 1 | 0 | 0 | 1 | 1 | 33(2π/40) |
| | 0 | 1 | 1 | 0 | 1 | 0 | 0 | 34(2π/40) |
| | 0 | 1 | 1 | 1 | 0 | 0 | 0 | 35(2π/40) |
| | 0 | 1 | 1 | 1 | 0 | 0 | 1 | 36(2π/40) |
| | 0 | 1 | 1 | 1 | 0 | 1 | 0 | 37(2π/40) |
| | 0 | 1 | 1 | 1 | 0 | 1 | 1 | 38(2π/40) |
| | 0 | 1 | 1 | 1 | 1 | 0 | 0 | 39(2π/40) |
| 42 | 0 | 0 | 0 | 0 | 0 | 0 | 0 | 0 |
| | 0 | 0 | 0 | 0 | 0 | 0 | 1 | (2π/42) |
| | 0 | 0 | 0 | 0 | 0 | 1 | 0 | 2(2π/42) |
| | 0 | 0 | 0 | 1 | 0 | 0 | 0 | 3(2π/42) |
| | 0 | 0 | 0 | 1 | 0 | 0 | 1 | 4(2π/42) |
| | 0 | 0 | 0 | 1 | 0 | 1 | 0 | 5(2π/42) |
| | 0 | 0 | 1 | 0 | 0 | 0 | 0 | 6(2π/42) |
| | 0 | 0 | 1 | 0 | 0 | 0 | 1 | 7(2π/42) |
| | 0 | 0 | 1 | 0 | 0 | 1 | 0 | 8(2π/42) |
| | 0 | 0 | 1 | 1 | 0 | 0 | 0 | 9(2π/42) |
| | 0 | 0 | 1 | 1 | 0 | 0 | 1 | 10(2π/42) |
| | 0 | 0 | 1 | 1 | 0 | 1 | 0 | 11(2π/42) |
| | 0 | 1 | 0 | 0 | 0 | 0 | 0 | 12(2π/42) |
| | 0 | 1 | 0 | 0 | 0 | 0 | 1 | 13(2π/42) |
| | 0 | 1 | 0 | 0 | 0 | 1 | 0 | 14(2π/42) |
| | 0 | 1 | 0 | 1 | 0 | 0 | 0 | 15(2π/42) |
| | 0 | 1 | 0 | 1 | 0 | 0 | 1 | 16(2π/42) |
| | 0 | 1 | 0 | 1 | 0 | 1 | 0 | 17(2π/42) |
| | 0 | 1 | 1 | 0 | 0 | 0 | 0 | 18(2π/42) |
| | 0 | 1 | 1 | 0 | 0 | 0 | 1 | 19(2π/42) |
| | 0 | 1 | 1 | 0 | 0 | 1 | 0 | 20(2π/42) |
| | 1 | 0 | 0 | 0 | 0 | 0 | 0 | 21(2π/42) |
| | 1 | 0 | 0 | 0 | 0 | 0 | 1 | 22(2π/42) |
| | 1 | 0 | 0 | 0 | 0 | 1 | 0 | 23(2π/42) |
| | 1 | 0 | 0 | 1 | 0 | 0 | 0 | 24(2π/42) |
| | 1 | 0 | 0 | 1 | 0 | 0 | 1 | 25(2π/42) |
| | 1 | 0 | 0 | 1 | 0 | 1 | 0 | 26(2π/42) |
| | 1 | 0 | 1 | 0 | 0 | 0 | 0 | 27(2π/42) |
| | 1 | 0 | 1 | 0 | 0 | 0 | 1 | 28(2π/42) |
| | 1 | 0 | 1 | 0 | 0 | 1 | 0 | 29(2π/42) |
| | 1 | 0 | 1 | 1 | 0 | 0 | 0 | 30(2π/42) |
| | 1 | 0 | 1 | 1 | 0 | 0 | 1 | 31(2π/42) |
| | 1 | 0 | 1 | 1 | 0 | 1 | 0 | 32(2π/42) |
| | 1 | 1 | 0 | 0 | 0 | 0 | 0 | 33(2π/42) |
| | 1 | 1 | 0 | 0 | 0 | 0 | 1 | 34(2π/42) |
| | 1 | 1 | 0 | 0 | 0 | 1 | 0 | 35(2π/42) |
| | 1 | 1 | 0 | 1 | 0 | 0 | 0 | 36(2π/42) |
| | 1 | 1 | 0 | 1 | 0 | 0 | 1 | 37(2π/42) |
| | 1 | 1 | 0 | 1 | 0 | 1 | 0 | 38(2π/42) |
| | 1 | 1 | 1 | 0 | 0 | 0 | 0 | 39(2π/42) |
| | 1 | 1 | 1 | 0 | 0 | 0 | 1 | 40(2π/42) |
| | 1 | 1 | 1 | 0 | 0 | 1 | 0 | 41(2π/42) |

| Divide Ratio | PHnADGC6 | PHnADGC5 | PHnADGC4 | PHnADGC3 | PHnADGC2 | PHnADGC1 | PHnADGC0 | Phase Delay |
|---|---|---|---|---|---|---|---|---|
| | n.12 | n.11 | n.10 | n.9 | n.8 | n.7 | n.6 | (radian) |
| 48 | 0 | 0 | 0 | 0 | 0 | 0 | 0 | 0 |
| | 0 | 0 | 0 | 0 | 0 | 0 | 1 | (2π/48) |
| | 0 | 0 | 0 | 0 | 0 | 1 | 0 | 2(2π/48) |
| | 0 | 0 | 0 | 0 | 0 | 1 | 1 | 3(2π/48) |
| | 0 | 0 | 0 | 1 | 0 | 0 | 0 | 4(2π/48) |
| | 0 | 0 | 0 | 1 | 0 | 0 | 1 | 5(2π/48) |
| | 0 | 0 | 0 | 1 | 0 | 1 | 0 | 6(2π/48) |
| | 0 | 0 | 0 | 1 | 0 | 1 | 1 | 7(2π/48) |
| | 0 | 0 | 1 | 0 | 0 | 0 | 0 | 8(2π/48) |
| | 0 | 0 | 1 | 0 | 0 | 0 | 1 | 9(2π/48) |
| | 0 | 0 | 1 | 0 | 0 | 1 | 0 | 10(2π/48) |
| | 0 | 0 | 1 | 0 | 0 | 1 | 1 | 11(2π/48) |
| | 0 | 0 | 1 | 1 | 0 | 0 | 0 | 12(2π/48) |
| | 0 | 0 | 1 | 1 | 0 | 0 | 1 | 13(2π/48) |
| | 0 | 0 | 1 | 1 | 0 | 1 | 0 | 14(2π/48) |
| | 0 | 0 | 1 | 1 | 0 | 1 | 1 | 15(2π/48) |
| | 0 | 1 | 0 | 0 | 0 | 0 | 0 | 16(2π/48) |
| | 0 | 1 | 0 | 0 | 0 | 0 | 1 | 17(2π/48) |
| | 0 | 1 | 0 | 0 | 0 | 1 | 0 | 18(2π/48) |
| | 0 | 1 | 0 | 0 | 0 | 1 | 1 | 19(2π/48) |
| | 0 | 1 | 0 | 1 | 0 | 0 | 0 | 20(2π/48) |
| | 0 | 1 | 0 | 1 | 0 | 0 | 1 | 21(2π/48) |
| | 0 | 1 | 0 | 1 | 0 | 1 | 0 | 22(2π/48) |
| | 0 | 1 | 0 | 1 | 0 | 1 | 1 | 23(2π/48) |
| | 1 | 0 | 0 | 0 | 0 | 0 | 0 | 24(2π/48) |
| | 1 | 0 | 0 | 0 | 0 | 0 | 1 | 25(2π/48) |
| | 1 | 0 | 0 | 0 | 0 | 1 | 0 | 26(2π/48) |
| | 1 | 0 | 0 | 0 | 0 | 1 | 1 | 27(2π/48) |
| | 1 | 0 | 0 | 1 | 0 | 0 | 0 | 28(2π/48) |
| | 1 | 0 | 0 | 1 | 0 | 0 | 1 | 29(2π/48) |
| | 1 | 0 | 0 | 1 | 0 | 1 | 0 | 30(2π/48) |
| | 1 | 0 | 0 | 1 | 0 | 1 | 1 | 31(2π/48) |
| | 1 | 0 | 1 | 0 | 0 | 0 | 0 | 32(2π/48) |
| | 1 | 0 | 1 | 0 | 0 | 0 | 1 | 33(2π/48) |
| | 1 | 0 | 1 | 0 | 0 | 1 | 0 | 34(2π/48) |
| | 1 | 0 | 1 | 0 | 0 | 1 | 1 | 35(2π/48) |
| | 1 | 0 | 1 | 1 | 0 | 0 | 0 | 36(2π/48) |
| | 1 | 0 | 1 | 1 | 0 | 0 | 1 | 37(2π/48) |
| | 1 | 0 | 1 | 1 | 0 | 1 | 0 | 38(2π/48) |
| | 1 | 0 | 1 | 1 | 0 | 1 | 1 | 39(2π/48) |
| | 1 | 1 | 0 | 0 | 0 | 0 | 0 | 40(2π/48) |
| | 1 | 1 | 0 | 0 | 0 | 0 | 1 | 41(2π/48) |
| | 1 | 1 | 0 | 0 | 0 | 1 | 0 | 42(2π/48) |
| | 1 | 1 | 0 | 0 | 0 | 1 | 1 | 43(2π/48) |
| | 1 | 1 | 0 | 1 | 0 | 0 | 0 | 44(2π/48) |
| | 1 | 1 | 0 | 1 | 0 | 0 | 1 | 45(2π/48) |
| | 1 | 1 | 0 | 1 | 0 | 1 | 0 | 46(2π/48) |
| | 1 | 1 | 0 | 1 | 0 | 1 | 1 | 47(2π/48) |


Copyright © 2008–2012, Texas Instruments Incorporated

## Table 24. CDCE18005 Output Coarse Phase Adjust Settings (4)

| Divide Ratio | PHnADGC6 | PHnADGC5 | PHnADGC4 | PHnADGC3 | PHnADGC2 | PHnADGC1 | PHnADGC0 | Phase Delay |
|---|---|---|---|---|---|---|---|---|
| | n.12 | n.11 | n.10 | n.9 | n.8 | n.7 | n.6 | (radian) |
| 50 | 0 | 0 | 0 | 0 | 0 | 0 | 0 | 0 |
| | 0 | 0 | 0 | 0 | 0 | 0 | 1 | (2π/50) |
| | 0 | 0 | 0 | 0 | 0 | 1 | 0 | 2(2π/50) |
| | 0 | 0 | 0 | 0 | 0 | 1 | 1 | 3(2π/50) |
| | 0 | 0 | 0 | 0 | 1 | 0 | 0 | 4(2π/50) |
| | 0 | 0 | 0 | 1 | 0 | 0 | 0 | 5(2π/50) |
| | 0 | 0 | 0 | 1 | 0 | 0 | 1 | 6(2π/50) |
| | 0 | 0 | 0 | 1 | 0 | 1 | 0 | 7(2π/50) |
| | 0 | 0 | 0 | 1 | 0 | 1 | 1 | 8(2π/50) |
| | 0 | 0 | 0 | 1 | 1 | 0 | 0 | 9(2π/50) |
| | 0 | 0 | 1 | 0 | 0 | 0 | 0 | 10(2π/50) |
| | 0 | 0 | 1 | 0 | 0 | 0 | 1 | 11(2π/50) |
| | 0 | 0 | 1 | 0 | 0 | 1 | 0 | 12(2π/50) |
| | 0 | 0 | 1 | 0 | 0 | 1 | 1 | 13(2π/50) |
| | 0 | 0 | 1 | 0 | 1 | 0 | 0 | 14(2π/50) |
| | 0 | 0 | 1 | 1 | 0 | 0 | 0 | 15(2π/50) |
| | 0 | 0 | 1 | 1 | 0 | 0 | 1 | 16(2π/50) |
| | 0 | 0 | 1 | 1 | 0 | 1 | 0 | 17(2π/50) |
| | 0 | 0 | 1 | 1 | 0 | 1 | 1 | 18(2π/50) |
| | 0 | 0 | 1 | 1 | 1 | 0 | 0 | 19(2π/50) |
| | 0 | 1 | 0 | 0 | 0 | 0 | 0 | 20(2π/50) |
| | 0 | 1 | 0 | 0 | 0 | 0 | 1 | 21(2π/50) |
| | 0 | 1 | 0 | 0 | 0 | 1 | 0 | 22(2π/50) |
| | 0 | 1 | 0 | 0 | 0 | 1 | 1 | 23(2π/50) |
| | 0 | 1 | 0 | 0 | 1 | 0 | 0 | 24(2π/50) |
| | 1 | 0 | 0 | 0 | 0 | 0 | 0 | 25(2π/50) |
| | 1 | 0 | 0 | 0 | 0 | 0 | 1 | 26(2π/50) |
| | 1 | 0 | 0 | 0 | 0 | 1 | 0 | 27(2π/50) |
| | 1 | 0 | 0 | 0 | 0 | 1 | 1 | 28(2π/50) |
| | 1 | 0 | 0 | 0 | 1 | 0 | 0 | 29(2π/50) |
| | 1 | 0 | 0 | 1 | 0 | 0 | 0 | 30(2π/50) |
| | 1 | 0 | 0 | 1 | 0 | 0 | 1 | 31(2π/50) |
| | 1 | 0 | 0 | 1 | 0 | 1 | 0 | 32(2π/50) |
| | 1 | 0 | 0 | 1 | 0 | 1 | 1 | 33(2π/50) |
| | 1 | 0 | 0 | 1 | 1 | 0 | 0 | 34(2π/50) |
| | 1 | 0 | 1 | 0 | 0 | 0 | 0 | 35(2π/50) |
| | 1 | 0 | 1 | 0 | 0 | 0 | 1 | 36(2π/50) |
| | 1 | 0 | 1 | 0 | 0 | 1 | 0 | 37(2π/50) |
| | 1 | 0 | 1 | 0 | 0 | 1 | 1 | 38(2π/50) |
| | 1 | 0 | 1 | 0 | 1 | 0 | 0 | 39(2π/50) |
| | 1 | 0 | 1 | 1 | 0 | 0 | 0 | 40(2π/50) |
| | 1 | 0 | 1 | 1 | 0 | 0 | 1 | 41(2π/50) |
| | 1 | 0 | 1 | 1 | 0 | 1 | 0 | 42(2π/50) |
| | 1 | 0 | 1 | 1 | 0 | 1 | 1 | 43(2π/50) |
| | 1 | 0 | 1 | 1 | 1 | 0 | 0 | 44(2π/50) |
| | 1 | 1 | 0 | 0 | 0 | 0 | 0 | 45(2π/50) |
| | 1 | 1 | 0 | 0 | 0 | 0 | 1 | 46(2π/50) |
| | 1 | 1 | 0 | 0 | 0 | 1 | 0 | 47(2π/50) |
| | 1 | 1 | 0 | 0 | 0 | 1 | 1 | 48(2π/50) |
| | 1 | 1 | 0 | 0 | 1 | 0 | 0 | 49(2π/50) |

| Divide Ratio | PHnADGC6 | PHnADGC5 | PHnADGC4 | PHnADGC3 | PHnADGC2 | PHnADGC1 | PHnADGC0 | Phase Delay |
|---|---|---|---|---|---|---|---|---|
| | n.12 | n.11 | n.10 | n.9 | n.8 | n.7 | n.6 | (radian) |
| 56 | 0 | 0 | 0 | 0 | 0 | 0 | 0 | 0 |
| | 0 | 0 | 0 | 0 | 0 | 0 | 1 | (2π/56) |
| | 0 | 0 | 0 | 0 | 0 | 1 | 0 | 2(2π/56) |
| | 0 | 0 | 0 | 0 | 0 | 1 | 1 | 3(2π/56) |
| | 0 | 0 | 0 | 1 | 0 | 0 | 0 | 4(2π/56) |
| | 0 | 0 | 0 | 1 | 0 | 0 | 1 | 5(2π/56) |
| | 0 | 0 | 0 | 1 | 0 | 1 | 0 | 6(2π/56) |
| | 0 | 0 | 0 | 1 | 0 | 1 | 1 | 7(2π/56) |
| | 0 | 0 | 1 | 0 | 0 | 0 | 0 | 8(2π/56) |
| | 0 | 0 | 1 | 0 | 0 | 0 | 1 | 9(2π/56) |
| | 0 | 0 | 1 | 0 | 0 | 1 | 0 | 10(2π/56) |
| | 0 | 0 | 1 | 0 | 0 | 1 | 1 | 11(2π/56) |
| | 0 | 0 | 1 | 1 | 0 | 0 | 0 | 12(2π/56) |
| | 0 | 0 | 1 | 1 | 0 | 0 | 1 | 13(2π/56) |
| | 0 | 0 | 1 | 1 | 0 | 1 | 0 | 14(2π/56) |
| | 0 | 0 | 1 | 1 | 0 | 1 | 1 | 15(2π/56) |
| | 0 | 1 | 0 | 0 | 0 | 0 | 0 | 16(2π/56) |
| | 0 | 1 | 0 | 0 | 0 | 0 | 1 | 17(2π/56) |
| | 0 | 1 | 0 | 0 | 0 | 1 | 0 | 18(2π/56) |
| | 0 | 1 | 0 | 0 | 0 | 1 | 1 | 19(2π/56) |
| | 0 | 1 | 0 | 1 | 0 | 0 | 0 | 20(2π/56) |
| | 0 | 1 | 0 | 1 | 0 | 0 | 1 | 21(2π/56) |
| | 0 | 1 | 0 | 1 | 0 | 1 | 0 | 22(2π/56) |
| | 0 | 1 | 0 | 1 | 0 | 1 | 1 | 23(2π/56) |
| | 0 | 1 | 1 | 0 | 0 | 0 | 0 | 24(2π/56) |
| | 0 | 1 | 1 | 0 | 0 | 0 | 1 | 25(2π/56) |
| | 0 | 1 | 1 | 0 | 0 | 1 | 0 | 26(2π/56) |
| | 0 | 1 | 1 | 0 | 0 | 1 | 1 | 27(2π/56) |
| | 1 | 0 | 0 | 0 | 0 | 0 | 0 | 28(2π/56) |
| | 1 | 0 | 0 | 0 | 0 | 0 | 1 | 29(2π/56) |
| | 1 | 0 | 0 | 0 | 0 | 1 | 0 | 30(2π/56) |
| | 1 | 0 | 0 | 0 | 0 | 1 | 1 | 31(2π/56) |
| | 1 | 0 | 0 | 1 | 0 | 0 | 0 | 32(2π/56) |
| | 1 | 0 | 0 | 1 | 0 | 0 | 1 | 33(2π/56) |
| | 1 | 0 | 0 | 1 | 0 | 1 | 0 | 34(2π/56) |
| | 1 | 0 | 0 | 1 | 0 | 1 | 1 | 35(2π/56) |
| | 1 | 0 | 1 | 0 | 0 | 0 | 0 | 36(2π/56) |
| | 1 | 0 | 1 | 0 | 0 | 0 | 1 | 37(2π/56) |
| | 1 | 0 | 1 | 0 | 0 | 1 | 0 | 38(2π/56) |
| | 1 | 0 | 1 | 0 | 0 | 1 | 1 | 39(2π/56) |
| | 1 | 0 | 1 | 1 | 0 | 0 | 0 | 40(2π/56) |
| | 1 | 0 | 1 | 1 | 0 | 0 | 1 | 41(2π/56) |
| | 1 | 0 | 1 | 1 | 0 | 1 | 0 | 42(2π/56) |
| | 1 | 0 | 1 | 1 | 0 | 1 | 1 | 43(2π/56) |
| | 1 | 1 | 0 | 0 | 0 | 0 | 0 | 44(2π/56) |
| | 1 | 1 | 0 | 0 | 0 | 0 | 1 | 45(2π/56) |
| | 1 | 1 | 0 | 0 | 0 | 1 | 0 | 46(2π/56) |
| | 1 | 1 | 0 | 0 | 0 | 1 | 1 | 47(2π/56) |
| | 1 | 1 | 0 | 1 | 0 | 0 | 0 | 48(2π/56) |
| | 1 | 1 | 0 | 1 | 0 | 0 | 1 | 49(2π/56) |
| | 1 | 1 | 0 | 1 | 0 | 1 | 0 | 50(2π/56) |
| | 1 | 1 | 0 | 1 | 0 | 1 | 1 | 51(2π/56) |
| | 1 | 1 | 1 | 0 | 0 | 0 | 0 | 52(2π/56) |
| | 1 | 1 | 1 | 0 | 0 | 0 | 1 | 53(2π/56) |
| | 1 | 1 | 1 | 0 | 0 | 1 | 0 | 54(2π/56) |
| | 1 | 1 | 1 | 0 | 0 | 1 | 1 | 55(2π/56) |

Copyright © 2008–2012, Texas Instruments Incorporated

## Table 25. CDCE18005 Output Coarse Phase Adjust Settings (5)

| Divide Ratio | PHnADGC6 | PHnADGC5 | PHnADGC4 | PHnADGC3 | PHnADGC2 | PHnADGC1 | PHnADGC0 | Phase Delay |
|---|---|---|---|---|---|---|---|---|
| | n.12 | n.11 | n.10 | n.9 | n.8 | n.7 | n.6 | (radian) |
| 60 | 0 | 0 | 0 | 0 | 0 | 0 | 0 | 0 |
| | 0 | 0 | 0 | 0 | 0 | 0 | 1 | (2π/60) |
| | 0 | 0 | 0 | 0 | 0 | 1 | 0 | 2(2π/60) |
| | 0 | 0 | 0 | 0 | 0 | 1 | 1 | 3(2π/60) |
| | 0 | 0 | 0 | 0 | 1 | 0 | 0 | 4(2π/60) |
| | 0 | 0 | 0 | 1 | 0 | 0 | 0 | 5(2π/60) |
| | 0 | 0 | 0 | 1 | 0 | 0 | 1 | 6(2π/60) |
| | 0 | 0 | 0 | 1 | 0 | 1 | 0 | 7(2π/60) |
| | 0 | 0 | 0 | 1 | 0 | 1 | 1 | 8(2π/60) |
| | 0 | 0 | 0 | 1 | 1 | 0 | 0 | 9(2π/60) |
| | 0 | 0 | 1 | 0 | 0 | 0 | 0 | 10(2π/60) |
| | 0 | 0 | 1 | 0 | 0 | 0 | 1 | 11(2π/60) |
| | 0 | 0 | 1 | 0 | 0 | 1 | 0 | 12(2π/60) |
| | 0 | 0 | 1 | 0 | 0 | 1 | 1 | 13(2π/60) |
| | 0 | 0 | 1 | 0 | 1 | 0 | 0 | 14(2π/60) |
| | 0 | 0 | 1 | 1 | 0 | 0 | 0 | 15(2π/60) |
| | 0 | 0 | 1 | 1 | 0 | 0 | 1 | 16(2π/60) |
| | 0 | 0 | 1 | 1 | 0 | 1 | 0 | 17(2π/60) |
| | 0 | 0 | 1 | 1 | 0 | 1 | 1 | 18(2π/60) |
| | 0 | 0 | 1 | 1 | 1 | 0 | 0 | 19(2π/60) |
| | 0 | 1 | 0 | 0 | 0 | 0 | 0 | 20(2π/60) |
| | 0 | 1 | 0 | 0 | 0 | 0 | 1 | 21(2π/60) |
| | 0 | 1 | 0 | 0 | 0 | 1 | 0 | 22(2π/60) |
| | 0 | 1 | 0 | 0 | 0 | 1 | 1 | 23(2π/60) |
| | 0 | 1 | 0 | 0 | 1 | 0 | 0 | 24(2π/60) |
| | 0 | 1 | 0 | 1 | 0 | 0 | 0 | 25(2π/60) |
| | 0 | 1 | 0 | 1 | 0 | 0 | 1 | 26(2π/60) |
| | 0 | 1 | 0 | 1 | 0 | 1 | 0 | 27(2π/60) |
| | 0 | 1 | 0 | 1 | 0 | 1 | 1 | 28(2π/60) |
| | 0 | 1 | 0 | 1 | 1 | 0 | 0 | 29(2π/60) |
| | 1 | 0 | 0 | 0 | 0 | 0 | 0 | 30(2π/60) |
| | 1 | 0 | 0 | 0 | 0 | 0 | 1 | 31(2π/60) |
| | 1 | 0 | 0 | 0 | 0 | 1 | 0 | 32(2π/60) |
| | 1 | 0 | 0 | 0 | 0 | 1 | 1 | 33(2π/60) |
| | 1 | 0 | 0 | 0 | 1 | 0 | 0 | 34(2π/60) |
| | 1 | 0 | 0 | 1 | 0 | 0 | 0 | 35(2π/60) |
| | 1 | 0 | 0 | 1 | 0 | 0 | 1 | 36(2π/60) |
| | 1 | 0 | 0 | 1 | 0 | 1 | 0 | 37(2π/60) |
| | 1 | 0 | 0 | 1 | 0 | 1 | 1 | 38(2π/60) |
| | 1 | 0 | 0 | 1 | 1 | 0 | 0 | 39(2π/60) |
| | 1 | 0 | 1 | 0 | 0 | 0 | 0 | 40(2π/60) |
| | 1 | 0 | 1 | 0 | 0 | 0 | 1 | 41(2π/60) |
| | 1 | 0 | 1 | 0 | 0 | 1 | 0 | 42(2π/60) |
| | 1 | 0 | 1 | 0 | 0 | 1 | 1 | 43(2π/60) |
| | 1 | 0 | 1 | 0 | 1 | 0 | 0 | 44(2π/60) |
| | 1 | 0 | 1 | 1 | 0 | 0 | 0 | 45(2π/60) |
| | 1 | 0 | 1 | 1 | 0 | 0 | 1 | 46(2π/60) |
| | 1 | 0 | 1 | 1 | 0 | 1 | 0 | 47(2π/60) |
| | 1 | 0 | 1 | 1 | 0 | 1 | 1 | 48(2π/60) |
| | 1 | 0 | 1 | 1 | 1 | 0 | 0 | 49(2π/60) |
| | 1 | 1 | 0 | 0 | 0 | 0 | 0 | 50(2π/60) |
| | 1 | 1 | 0 | 0 | 0 | 0 | 1 | 51(2π/60) |
| | 1 | 1 | 0 | 0 | 0 | 1 | 0 | 52(2π/60) |
| | 1 | 1 | 0 | 0 | 0 | 1 | 1 | 53(2π/60) |
| | 1 | 1 | 0 | 0 | 1 | 0 | 0 | 54(2π/60) |
| | 1 | 1 | 0 | 1 | 0 | 0 | 0 | 55(2π/60) |
| | 1 | 1 | 0 | 1 | 0 | 0 | 1 | 56(2π/60) |
| | 1 | 1 | 0 | 1 | 0 | 1 | 0 | 57(2π/60) |
| | 1 | 1 | 0 | 1 | 0 | 1 | 1 | 58(2π/60) |
| | 1 | 1 | 0 | 1 | 1 | 0 | 0 | 59(2π/60) |

| Divide Ratio | PHnADGC6 | PHnADGC5 | PHnADGC4 | PHnADGC3 | PHnADGC2 | PHnADGC1 | PHnADGC0 | Phase Delay |
|---|---|---|---|---|---|---|---|---|
| | n.12 | n.11 | n.10 | n.9 | n.8 | n.7 | n.6 | (radian) |
| 64 | 0 | 0 | 0 | 0 | 0 | 0 | 0 | 0 |
| | 0 | 0 | 0 | 0 | 0 | 0 | 1 | (2π/64) |
| | 0 | 0 | 0 | 0 | 0 | 1 | 0 | 2(2π/64) |
| | 0 | 0 | 0 | 0 | 0 | 1 | 1 | 3(2π/64) |
| | 0 | 0 | 0 | 1 | 0 | 0 | 0 | 4(2π/64) |
| | 0 | 0 | 0 | 1 | 0 | 0 | 1 | 5(2π/64) |
| | 0 | 0 | 0 | 1 | 0 | 1 | 0 | 6(2π/64) |
| | 0 | 0 | 0 | 1 | 0 | 1 | 1 | 7(2π/64) |
| | 0 | 0 | 1 | 0 | 0 | 0 | 0 | 8(2π/64) |
| | 0 | 0 | 1 | 0 | 0 | 0 | 1 | 9(2π/64) |
| | 0 | 0 | 1 | 0 | 0 | 1 | 0 | 10(2π/64) |
| | 0 | 0 | 1 | 0 | 0 | 1 | 1 | 11(2π/64) |
| | 0 | 0 | 1 | 1 | 0 | 0 | 0 | 12(2π/64) |
| | 0 | 0 | 1 | 1 | 0 | 0 | 1 | 13(2π/64) |
| | 0 | 0 | 1 | 1 | 0 | 1 | 0 | 14(2π/64) |
| | 0 | 0 | 1 | 1 | 0 | 1 | 1 | 15(2π/64) |
| | 0 | 1 | 0 | 0 | 0 | 0 | 0 | 16(2π/64) |
| | 0 | 1 | 0 | 0 | 0 | 0 | 1 | 17(2π/64) |
| | 0 | 1 | 0 | 0 | 0 | 1 | 0 | 18(2π/64) |
| | 0 | 1 | 0 | 0 | 0 | 1 | 1 | 19(2π/64) |
| | 0 | 1 | 0 | 1 | 0 | 0 | 0 | 20(2π/64) |
| | 0 | 1 | 0 | 1 | 0 | 0 | 1 | 21(2π/64) |
| | 0 | 1 | 0 | 1 | 0 | 1 | 0 | 22(2π/64) |
| | 0 | 1 | 0 | 1 | 0 | 1 | 1 | 23(2π/64) |
| | 0 | 1 | 1 | 0 | 0 | 0 | 0 | 24(2π/64) |
| | 0 | 1 | 1 | 0 | 0 | 0 | 1 | 25(2π/64) |
| | 0 | 1 | 1 | 0 | 0 | 1 | 0 | 26(2π/64) |
| | 0 | 1 | 1 | 0 | 0 | 1 | 1 | 27(2π/64) |
| | 0 | 1 | 1 | 1 | 0 | 0 | 0 | 28(2π/64) |
| | 0 | 1 | 1 | 1 | 0 | 0 | 1 | 29(2π/64) |
| | 0 | 1 | 1 | 1 | 0 | 1 | 0 | 30(2π/64) |
| | 0 | 1 | 1 | 1 | 0 | 1 | 1 | 31(2π/64) |
| | 1 | 0 | 0 | 0 | 0 | 0 | 0 | 32(2π/64) |
| | 1 | 0 | 0 | 0 | 0 | 0 | 1 | 33(2π/64) |
| | 1 | 0 | 0 | 0 | 0 | 1 | 0 | 34(2π/64) |
| | 1 | 0 | 0 | 0 | 0 | 1 | 1 | 35(2π/64) |
| | 1 | 0 | 0 | 1 | 0 | 0 | 0 | 36(2π/64) |
| | 1 | 0 | 0 | 1 | 0 | 0 | 1 | 37(2π/64) |
| | 1 | 0 | 0 | 1 | 0 | 1 | 0 | 38(2π/64) |
| | 1 | 0 | 0 | 1 | 0 | 1 | 1 | 39(2π/64) |
| | 1 | 0 | 1 | 0 | 0 | 0 | 0 | 40(2π/64) |
| | 1 | 0 | 1 | 0 | 0 | 0 | 1 | 41(2π/64) |
| | 1 | 0 | 1 | 0 | 0 | 1 | 0 | 42(2π/64) |
| | 1 | 0 | 1 | 0 | 0 | 1 | 1 | 43(2π/64) |
| | 1 | 0 | 1 | 1 | 0 | 0 | 0 | 44(2π/64) |
| | 1 | 0 | 1 | 1 | 0 | 0 | 1 | 45(2π/64) |
| | 1 | 0 | 1 | 1 | 0 | 1 | 0 | 46(2π/64) |
| | 1 | 0 | 1 | 1 | 0 | 1 | 1 | 47(2π/64) |
| | 1 | 1 | 0 | 0 | 0 | 0 | 0 | 48(2π/64) |
| | 1 | 1 | 0 | 0 | 0 | 0 | 1 | 49(2π/64) |
| | 1 | 1 | 0 | 0 | 0 | 1 | 0 | 50(2π/64) |
| | 1 | 1 | 0 | 0 | 0 | 1 | 1 | 51(2π/64) |
| | 1 | 1 | 0 | 1 | 0 | 0 | 0 | 52(2π/64) |
| | 1 | 1 | 0 | 1 | 0 | 0 | 1 | 53(2π/64) |
| | 1 | 1 | 0 | 1 | 0 | 1 | 0 | 54(2π/64) |
| | 1 | 1 | 0 | 1 | 0 | 1 | 1 | 55(2π/64) |
| | 1 | 1 | 1 | 0 | 0 | 0 | 0 | 56(2π/64) |
| | 1 | 1 | 1 | 0 | 0 | 0 | 1 | 57(2π/64) |
| | 1 | 1 | 1 | 0 | 0 | 1 | 0 | 58(2π/64) |
| | 1 | 1 | 1 | 0 | 0 | 1 | 1 | 59(2π/64) |
| | 1 | 1 | 1 | 1 | 0 | 0 | 0 | 60(2π/64) |
| | 1 | 1 | 1 | 1 | 0 | 0 | 1 | 61(2π/64) |
| | 1 | 1 | 1 | 1 | 0 | 1 | 0 | 62(2π/64) |
| | 1 | 1 | 1 | 1 | 0 | 1 | 1 | 63(2π/64) |


Copyright © 2008–2012, Texas Instruments Incorporated

## Table 26. CDCE18005 Output Coarse Phase Adjust Settings (6)

| Divide Ratio | PHnADGC6 | PHnADGC5 | PHnADGC4 | PHnADGC3 | PHnADGC2 | PHnADGC1 | PHnADGC0 | Phase Delay |
|---|---|---|---|---|---|---|---|---|
| | n.12 | n.11 | n.10 | n.9 | n.8 | n.7 | n.6 | (radian) |
| 70 | 0 | 0 | 0 | 0 | 0 | 0 | 0 | 0 |
| | 0 | 0 | 0 | 0 | 0 | 0 | 1 | (2π/70) |
| | 0 | 0 | 0 | 0 | 0 | 1 | 0 | 2(2π/70) |
| | 0 | 0 | 0 | 0 | 0 | 1 | 1 | 3(2π/70) |
| | 0 | 0 | 0 | 0 | 1 | 0 | 0 | 4(2π/70) |
| | 0 | 0 | 0 | 1 | 0 | 0 | 0 | 5(2π/70) |
| | 0 | 0 | 0 | 1 | 0 | 0 | 1 | 6(2π/70) |
| | 0 | 0 | 0 | 1 | 0 | 1 | 0 | 7(2π/70) |
| | 0 | 0 | 0 | 1 | 0 | 1 | 1 | 8(2π/70) |
| | 0 | 0 | 0 | 1 | 1 | 0 | 0 | 9(2π/70) |
| | 0 | 0 | 1 | 0 | 0 | 0 | 0 | 10(2π/70) |
| | 0 | 0 | 1 | 0 | 0 | 0 | 1 | 11(2π/70) |
| | 0 | 0 | 1 | 0 | 0 | 1 | 0 | 12(2π/70) |
| | 0 | 0 | 1 | 0 | 0 | 1 | 1 | 13(2π/70) |
| | 0 | 0 | 1 | 0 | 1 | 0 | 0 | 14(2π/70) |
| | 0 | 0 | 1 | 1 | 0 | 0 | 0 | 15(2π/70) |
| | 0 | 0 | 1 | 1 | 0 | 0 | 1 | 16(2π/70) |
| | 0 | 0 | 1 | 1 | 0 | 1 | 0 | 17(2π/70) |
| | 0 | 0 | 1 | 1 | 0 | 1 | 1 | 18(2π/70) |
| | 0 | 0 | 1 | 1 | 1 | 0 | 0 | 19(2π/70) |
| | 0 | 1 | 0 | 0 | 0 | 0 | 0 | 20(2π/70) |
| | 0 | 1 | 0 | 0 | 0 | 0 | 1 | 21(2π/70) |
| | 0 | 1 | 0 | 0 | 0 | 1 | 0 | 22(2π/70) |
| | 0 | 1 | 0 | 0 | 0 | 1 | 1 | 23(2π/70) |
| | 0 | 1 | 0 | 0 | 1 | 0 | 0 | 24(2π/70) |
| | 0 | 1 | 0 | 1 | 0 | 0 | 0 | 25(2π/70) |
| | 0 | 1 | 0 | 1 | 0 | 0 | 1 | 26(2π/70) |
| | 0 | 1 | 0 | 1 | 0 | 1 | 0 | 27(2π/70) |
| | 0 | 1 | 0 | 1 | 0 | 1 | 1 | 28(2π/70) |
| | 0 | 1 | 0 | 1 | 1 | 0 | 0 | 29(2π/70) |
| | 0 | 1 | 1 | 0 | 0 | 0 | 0 | 30(2π/70) |
| | 0 | 1 | 1 | 0 | 0 | 0 | 1 | 31(2π/70) |
| | 0 | 1 | 1 | 0 | 0 | 1 | 0 | 32(2π/70) |
| | 0 | 1 | 1 | 0 | 0 | 1 | 1 | 33(2π/70) |
| | 0 | 1 | 1 | 0 | 1 | 0 | 0 | 34(2π/70) |
| | 1 | 0 | 0 | 0 | 0 | 0 | 0 | 35(2π/70) |
| | 1 | 0 | 0 | 0 | 0 | 0 | 1 | 36(2π/70) |
| | 1 | 0 | 0 | 0 | 0 | 1 | 0 | 37(2π/70) |
| | 1 | 0 | 0 | 0 | 0 | 1 | 1 | 38(2π/70) |
| | 1 | 0 | 0 | 0 | 1 | 0 | 0 | 39(2π/70) |
| | 1 | 0 | 0 | 1 | 0 | 0 | 0 | 40(2π/70) |
| | 1 | 0 | 0 | 1 | 0 | 0 | 1 | 41(2π/70) |
| | 1 | 0 | 0 | 1 | 0 | 1 | 0 | 42(2π/70) |
| | 1 | 0 | 0 | 1 | 0 | 1 | 1 | 43(2π/70) |
| | 1 | 0 | 0 | 1 | 1 | 0 | 0 | 44(2π/70) |
| | 1 | 0 | 1 | 0 | 0 | 0 | 0 | 45(2π/70) |
| | 1 | 0 | 1 | 0 | 0 | 0 | 1 | 46(2π/70) |
| | 1 | 0 | 1 | 0 | 0 | 1 | 0 | 47(2π/70) |
| | 1 | 0 | 1 | 0 | 0 | 1 | 1 | 48(2π/70) |
| | 1 | 0 | 1 | 0 | 1 | 0 | 0 | 49(2π/70) |
| | 1 | 0 | 1 | 1 | 0 | 0 | 0 | 50(2π/70) |
| | 1 | 0 | 1 | 1 | 0 | 0 | 1 | 51(2π/70) |
| | 1 | 0 | 1 | 1 | 0 | 1 | 0 | 52(2π/70) |
| | 1 | 0 | 1 | 1 | 0 | 1 | 1 | 53(2π/70) |
| | 1 | 0 | 1 | 1 | 1 | 0 | 0 | 54(2π/70) |
| | 1 | 1 | 0 | 0 | 0 | 0 | 0 | 55(2π/70) |
| | 1 | 1 | 0 | 0 | 0 | 0 | 1 | 56(2π/70) |
| | 1 | 1 | 0 | 0 | 0 | 1 | 0 | 57(2π/70) |
| | 1 | 1 | 0 | 0 | 0 | 1 | 1 | 58(2π/70) |
| | 1 | 1 | 0 | 0 | 1 | 0 | 0 | 59(2π/70) |
| | 1 | 1 | 0 | 1 | 0 | 0 | 0 | 60(2π/70) |
| | 1 | 1 | 0 | 1 | 0 | 0 | 1 | 61(2π/70) |
| | 1 | 1 | 0 | 1 | 0 | 1 | 0 | 62(2π/70) |
| | 1 | 1 | 0 | 1 | 0 | 1 | 1 | 63(2π/70) |
| | 1 | 1 | 0 | 1 | 1 | 0 | 0 | 64(2π/70) |
| | 1 | 1 | 1 | 0 | 0 | 0 | 0 | 65(2π/70) |
| | 1 | 1 | 1 | 0 | 0 | 0 | 1 | 66(2π/70) |
| | 1 | 1 | 1 | 0 | 0 | 1 | 0 | 67(2π/70) |
| | 1 | 1 | 1 | 0 | 0 | 1 | 1 | 68(2π/70) |
| | 1 | 1 | 1 | 0 | 1 | 0 | 0 | 69(2π/70) |

| Divide Ratio | PHnADGC6 | PHnADGC5 | PHnADGC4 | PHnADGC3 | PHnADGC2 | PHnADGC1 | PHnADGC0 | Phase Delay |
|---|---|---|---|---|---|---|---|---|
| | n.12 | n.11 | n.10 | n.9 | n.8 | n.7 | n.6 | (radian) |
| 80 | 0 | 0 | 0 | 0 | 0 | 0 | 0 | 0 |
| | 0 | 0 | 0 | 0 | 0 | 0 | 1 | (2π/80) |
| | 0 | 0 | 0 | 0 | 0 | 1 | 0 | 2(2π/80) |
| | 0 | 0 | 0 | 0 | 0 | 1 | 1 | 3(2π/80) |
| | 0 | 0 | 0 | 0 | 1 | 0 | 0 | 4(2π/80) |
| | 0 | 0 | 0 | 1 | 0 | 0 | 0 | 5(2π/80) |
| | 0 | 0 | 0 | 1 | 0 | 0 | 1 | 6(2π/80) |
| | 0 | 0 | 0 | 1 | 0 | 1 | 0 | 7(2π/80) |
| | 0 | 0 | 0 | 1 | 0 | 1 | 1 | 8(2π/80) |
| | 0 | 0 | 0 | 1 | 1 | 0 | 0 | 9(2π/80) |
| | 0 | 0 | 1 | 0 | 0 | 0 | 0 | 10(2π/80) |
| | 0 | 0 | 1 | 0 | 0 | 0 | 1 | 11(2π/80) |
| | 0 | 0 | 1 | 0 | 0 | 1 | 0 | 12(2π/80) |
| | 0 | 0 | 1 | 0 | 0 | 1 | 1 | 13(2π/80) |
| | 0 | 0 | 1 | 0 | 1 | 0 | 0 | 14(2π/80) |
| | 0 | 0 | 1 | 1 | 0 | 0 | 0 | 15(2π/80) |
| | 0 | 0 | 1 | 1 | 0 | 0 | 1 | 16(2π/80) |
| | 0 | 0 | 1 | 1 | 0 | 1 | 0 | 17(2π/80) |
| | 0 | 0 | 1 | 1 | 0 | 1 | 1 | 18(2π/80) |
| | 0 | 0 | 1 | 1 | 1 | 0 | 0 | 19(2π/80) |
| | 0 | 1 | 0 | 0 | 0 | 0 | 0 | 20(2π/80) |
| | 0 | 1 | 0 | 0 | 0 | 0 | 1 | 21(2π/80) |
| | 0 | 1 | 0 | 0 | 0 | 1 | 0 | 22(2π/80) |
| | 0 | 1 | 0 | 0 | 0 | 1 | 1 | 23(2π/80) |
| | 0 | 1 | 0 | 0 | 1 | 0 | 0 | 24(2π/80) |
| | 0 | 1 | 0 | 1 | 0 | 0 | 0 | 25(2π/80) |
| | 0 | 1 | 0 | 1 | 0 | 0 | 1 | 26(2π/80) |
| | 0 | 1 | 0 | 1 | 0 | 1 | 0 | 27(2π/80) |
| | 0 | 1 | 0 | 1 | 0 | 1 | 1 | 28(2π/80) |
| | 0 | 1 | 0 | 1 | 1 | 0 | 0 | 29(2π/80) |
| | 0 | 1 | 1 | 0 | 0 | 0 | 0 | 30(2π/80) |
| | 0 | 1 | 1 | 0 | 0 | 0 | 1 | 31(2π/80) |
| | 0 | 1 | 1 | 0 | 0 | 1 | 0 | 32(2π/80) |
| | 0 | 1 | 1 | 0 | 0 | 1 | 1 | 33(2π/80) |
| | 0 | 1 | 1 | 0 | 1 | 0 | 0 | 34(2π/80) |
| | 0 | 1 | 1 | 1 | 0 | 0 | 0 | 35(2π/80) |
| | 0 | 1 | 1 | 1 | 0 | 0 | 1 | 36(2π/80) |
| | 0 | 1 | 1 | 1 | 0 | 1 | 0 | 37(2π/80) |
| | 0 | 1 | 1 | 1 | 0 | 1 | 1 | 38(2π/80) |
| | 0 | 1 | 1 | 1 | 1 | 0 | 0 | 39(2π/80) |
| | 1 | 0 | 0 | 0 | 0 | 0 | 0 | 40(2π/80) |
| | 1 | 0 | 0 | 0 | 0 | 0 | 1 | 41(2π/80) |
| | 1 | 0 | 0 | 0 | 0 | 1 | 0 | 42(2π/80) |
| | 1 | 0 | 0 | 0 | 0 | 1 | 1 | 43(2π/80) |
| | 1 | 0 | 0 | 0 | 1 | 0 | 0 | 44(2π/80) |
| | 1 | 0 | 0 | 1 | 0 | 0 | 0 | 45(2π/80) |
| | 1 | 0 | 0 | 1 | 0 | 0 | 1 | 46(2π/80) |
| | 1 | 0 | 0 | 1 | 0 | 1 | 0 | 47(2π/80) |
| | 1 | 0 | 0 | 1 | 0 | 1 | 1 | 48(2π/80) |
| | 1 | 0 | 0 | 1 | 1 | 0 | 0 | 49(2π/80) |
| | 1 | 0 | 1 | 0 | 0 | 0 | 0 | 50(2π/80) |
| | 1 | 0 | 1 | 0 | 0 | 0 | 1 | 51(2π/80) |
| | 1 | 0 | 1 | 0 | 0 | 1 | 0 | 52(2π/80) |
| | 1 | 0 | 1 | 0 | 0 | 1 | 1 | 53(2π/80) |
| | 1 | 0 | 1 | 0 | 1 | 0 | 0 | 54(2π/80) |
| | 1 | 0 | 1 | 1 | 0 | 0 | 0 | 55(2π/80) |
| | 1 | 0 | 1 | 1 | 0 | 0 | 1 | 56(2π/80) |
| | 1 | 0 | 1 | 1 | 0 | 1 | 0 | 57(2π/80) |
| | 1 | 0 | 1 | 1 | 0 | 1 | 1 | 58(2π/80) |
| | 1 | 0 | 1 | 1 | 1 | 0 | 0 | 59(2π/80) |
| | 1 | 1 | 0 | 0 | 0 | 0 | 0 | 60(2π/80) |
| | 1 | 1 | 0 | 0 | 0 | 0 | 1 | 61(2π/80) |
| | 1 | 1 | 0 | 0 | 0 | 1 | 0 | 62(2π/80) |
| | 1 | 1 | 0 | 0 | 0 | 1 | 1 | 63(2π/80) |
| | 1 | 1 | 0 | 0 | 1 | 0 | 0 | 64(2π/80) |
| | 1 | 1 | 0 | 1 | 0 | 0 | 0 | 65(2π/80) |
| | 1 | 1 | 0 | 1 | 0 | 0 | 1 | 66(2π/80) |
| | 1 | 1 | 0 | 1 | 0 | 1 | 0 | 67(2π/80) |
| | 1 | 1 | 0 | 1 | 0 | 1 | 1 | 68(2π/80) |
| | 1 | 1 | 0 | 1 | 1 | 0 | 0 | 69(2π/80) |
| | 1 | 1 | 1 | 0 | 0 | 0 | 0 | 70(2π/80) |
| | 1 | 1 | 1 | 0 | 0 | 0 | 1 | 71(2π/80) |
| | 1 | 1 | 1 | 0 | 0 | 1 | 0 | 72(2π/80) |
| | 1 | 1 | 1 | 0 | 0 | 1 | 1 | 73(2π/80) |
| | 1 | 1 | 1 | 0 | 1 | 0 | 0 | 74(2π/80) |
| | 1 | 1 | 1 | 1 | 0 | 0 | 0 | 75(2π/80) |
| | 1 | 1 | 1 | 1 | 0 | 0 | 1 | 76(2π/80) |
| | 1 | 1 | 1 | 1 | 0 | 1 | 0 | 77(2π/80) |
| | 1 | 1 | 1 | 1 | 0 | 1 | 1 | 78(2π/80) |
| | 1 | 1 | 1 | 1 | 1 | 0 | 0 | 79(2π/80) |

Copyright © 2008–2012, Texas Instruments Incorporated

### Crystal Input Interface

Fundamental mode is the recommended oscillation mode of operation for the input crystal and parallel resonance is the recommended type of circuit for the crystal.

A crystal load capacitance refers to all capacitances in the oscillator feedback loop. It is equal to the amount of capacitance seen between the terminals of the crystal in the circuit. For parallel resonant mode circuits, the correct load capacitance is necessary to ensure the oscillation of the crystal within the expected parameters.

The CDCE18005 implements an input crystal oscillator circuitry, known as the Colpitts oscillator, and requires one pad of the crystal to interface with the AUX_IN pin; the other pad of the crystal is tied to ground. In this crystal interface, it is important to account for all sources of capacitance when calculating the correct value for the discrete capacitor component, $C_L$, for a design.

The CDCE18005 has been characterized with 10-pF parallel resonant crystals. The input crystal oscillator stage in the CDCE18005 is designed to oscillate at the correct frequency for all parallel resonant crystals with low-pull capability and rated with a load capacitance that is equal to the sum of the on-chip load capacitance at the AUX_IN pin (10-pF), crystal stray capacitance, and board parasitic capacitance between the crystal and AUX_IN pin.

The normalized frequency error of the crystal, as a result of load capacitance mismatch, can be calculated as Equation 4:

$$\frac{\Delta f}{f} = \frac{C_S}{2\left(C_{L,R} + C_O\right)} - \frac{C_S}{2\left(C_{L,A} + C_O\right)} \tag{4}$$

Where:

$C_S$ is the motional capacitance of the crystal
$C_O$ is the shunt capacitance of the crystal
$C_{L,R}$ is the rated load capacitance for the crystal
$C_{L,A}$ is the actual load capacitance in the implemented PCB for the crystal
$\Delta f$ is the frequency error of the crystal
f is the rated frequency of the crystal

The first three parameters can be obtained from the crystal vendor.

In order to minimize the frequency error of the crystal to meet application requirements, the difference between the rated load capacitance and the actual load capacitance should be minimized and a crystal with low-pull capability (low $C_S$) should be used.

For example, if an application requires less than ±50 ppm frequency error and a crystal with less than ±50 ppm frequency tolerance is picked, the characteristics are as follows: $C_O$ = 7 pF, CS = 10 Δf, and $C_{L,R}$ = 12 pF. In order to meet the required frequency error, calculate $C_{L,A}$ using Equation 2 to be 17 pF. Subtracting $C_{L,R}$ from $C_{L,A}$, results in 5 pF; care must be taken during printed circuit board (PCB) layout with the crystal and the CDCE18005 to ensure that the sum of the crystal stray capacitance and board parasitic capacitance is less than the calculated 5 pF. Good layout practices are fundamental to the correct operation and reliability of the oscillator. It is critical to locate the crystal components very close to the XIN pin to minimize routing distances. Long traces in the oscillator circuit are a common source of problems. Do not route other signals across the oscillator circuit. Also, make sure power and high-frequency traces are routed as far away as possible to avoid crosstalk and noise coupling. Avoid the use of vias; if the routing becomes very complex, it is better to use 0-Ω resistors as bridges to go over other signals. Vias in the oscillator circuit should only be used for connections to the ground plane. Do not share ground connections; instead, make a separate connection to ground for each component that requires grounding. If possible, place multiple vias in parallel for each connection to the ground plane. Especially in the Colpitts oscillator configuration, the oscillator is very sensitive to capacitance in parallel with the crystal. Therefore, the layout must be designed to minimize stray capacitance across the crystal to less than 5 pF total under all circumstances to ensure proper crystal oscillation. Be sure to take into account both PCB and crystal stray capacitance.

### Auxiliary Output

Figure 26 shows the auxiliary output port. Table 27 lists how the auxiliary output port is controlled. The output buffer supports a maximum output frequency of 250 MHz and drives at LVCMOS levels. See Table 20 for the list of divider settings that establishes the output frequency.


Copyright © 2008–2012, Texas Instruments Incorporated

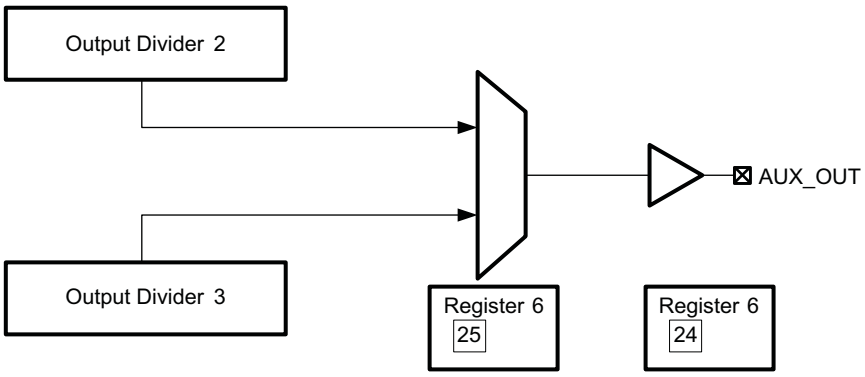


**Figure 26. CDCE18005 Auxiliary Output**

**Table 27. CDCE18005 Auxiliary Output Settings**

| Bit Name → | AUXFEEDSEL | AUXOUTEN | AUX_OUT SOURCE |
|---|---|---|---|
| Register.Bit → | 6.25 | 6.24 | |
| | X | 0 | OFF |
| | 0 | 1 | Divider 2 |
| | 1 | 1 | Divider 3 |

## DEVICE POWER CALCULATION AND THERMAL MANAGEMENT

The CDCE18005 is a high performance device, therefore careful attention must be paid to device configuration and printed circuit board layout with respect to power consumption. Table 28 provides the power consumption for the individual blocks within the CDCE18005. To estimate total power consumption, calculate the sum of the products of the number of blocks used and the power dissipated of each corresponding block.

Provide Sample Calculation Here after numbers become available.

**Table 28. CDCE18005 Power Consumption**

| Internal Block Power at 3.3V (typ) | | Power Dissipated per Block | Number of Blocks |
|---|---|---|---|
| Input and Control Circuit | | 450 mW | 1 |
| Output Dividers | Divider = 1 | 60 mW | 5 |
| | Divider > 1 | 140 mW | 5 |
| LVPECL Output Buffer | | 75 mW(1) | 5 |
| LVDS Output Buffer | | 76 mW | 5 |
| LVCMOS Output Buffer | Static | 7 mW | 10 |
| | Transient, '$C_L$' load, '$f_{OUT}$' MHz output frequency, 'V' output swing | $3.3 \times V \times f_{OUT} \times (C_L + 20 \times 10^{-12}) \times 10^3$ | 10 |

(1) Approximately 50 mW power dissipates externally at termination resistors per LVPECL output pair.

This power estimate determines the degree of thermal management required for a specific design. Employing the thermally enhanced printed circuit board layout shown in Figure 28 insures that the thermal performance curves shown in Figure 27 apply. Observing good thermal layout practices enables the thermal pad on the backside of the QFN-48 package to provide a good thermal path between the die contained within the package and the ambient air. This thermal pad also serves as the ground connection the device; therefore, a low inductance connection to the ground plane is essential.

Figure 28 shows a layout optimized for good thermal performance and a good power supply connection as well. The 7×7 filled via patter facilitates both considerations. Finally, the recommended layout achieves $\theta_{JA}$ = 27.3°C/W in still air and 20.3°C/W in an environment with 100 LFM airflow if implemented on a JEDEC compliant thermal test board.

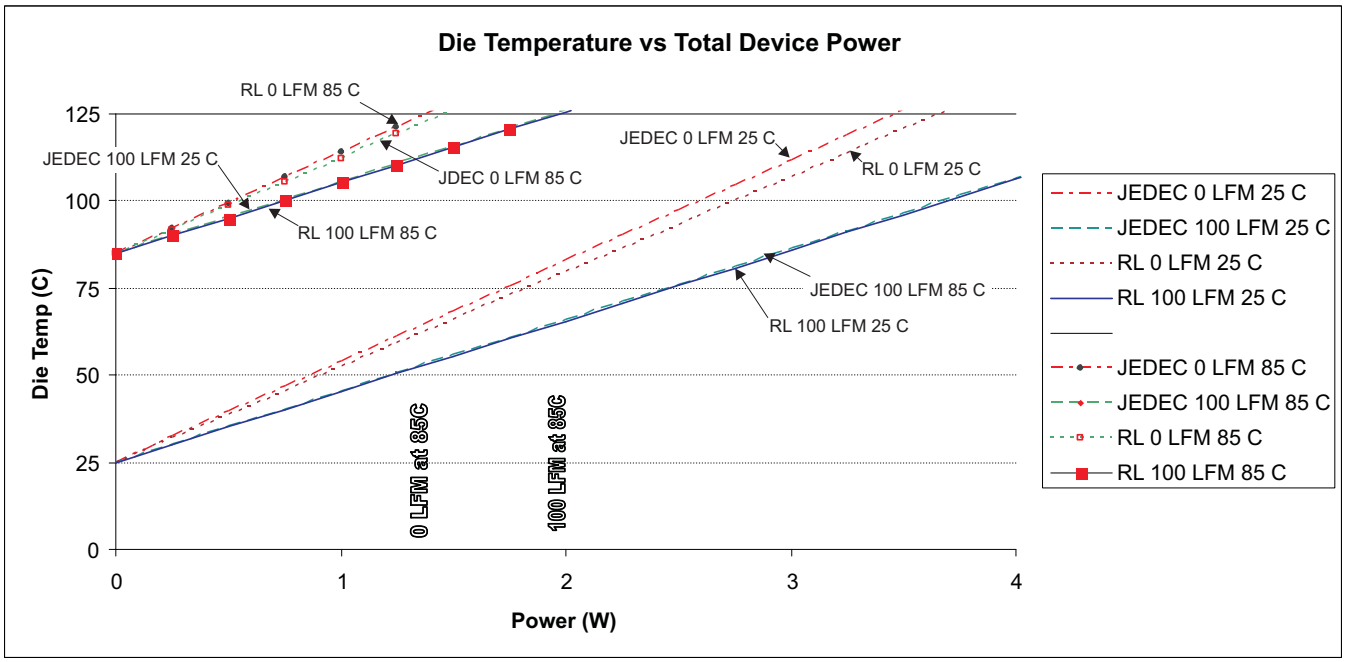


**Figure 27. CDCE18005 Die Temperature vs Device Power**


Copyright © 2008–2012, Texas Instruments Incorporated

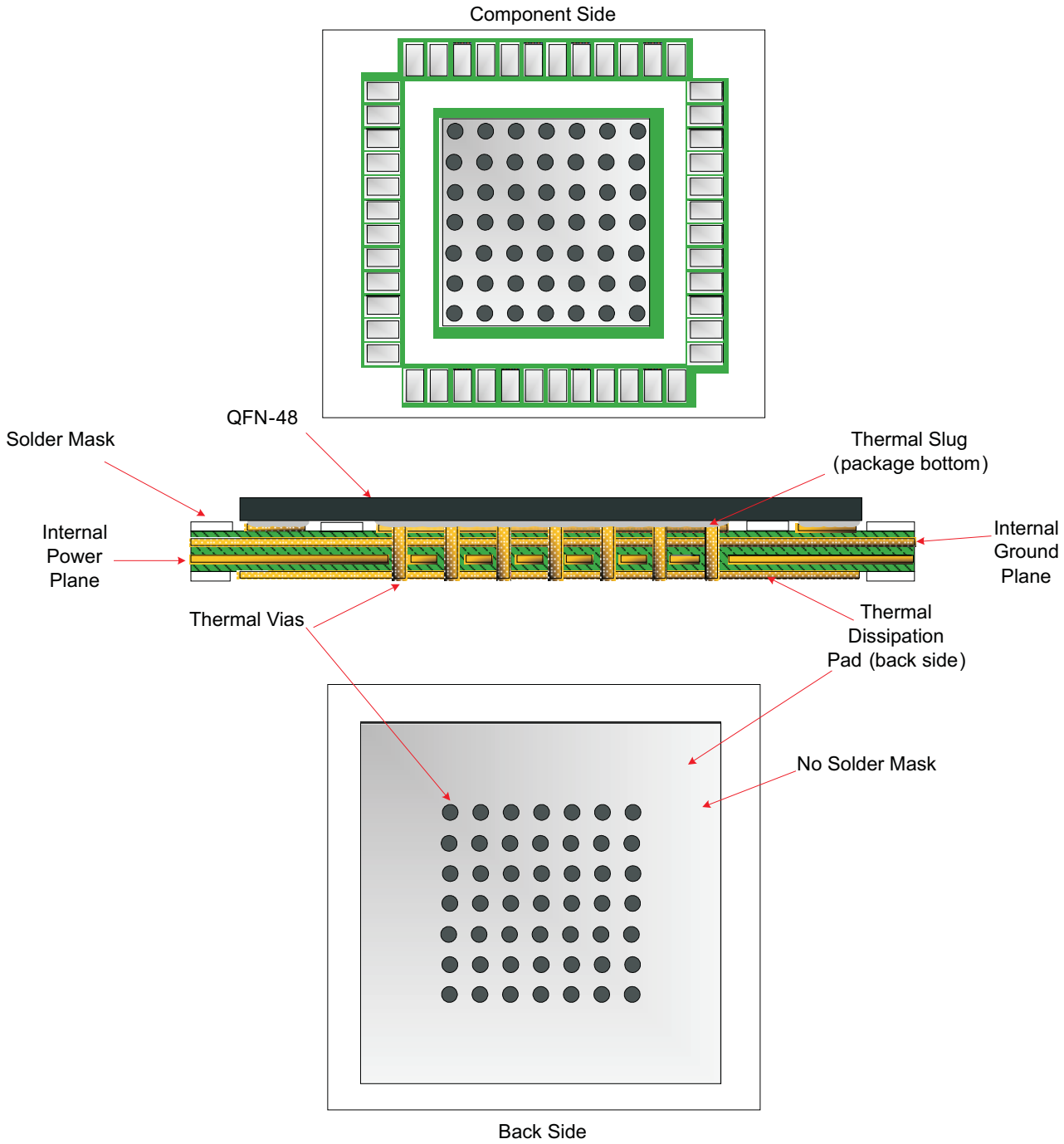


**Figure 28. CDCE18005 Recommended PCB Layout**

### CDCE18005 Power Supply Bypassing – Recommended Layout

Figure 29 shows two conceptual layouts detailing recommended placement of power supply bypass capacitors. If the capacitors are mounted on the back side, 0402 components can be employed; however, soldering to the Thermal Dissipation Pad can be difficult. For component side mounting, use 0201 body size capacitors to facilitate signal routing. Keep the connections between the bypass capacitors and the power supply on the device as short as possible.

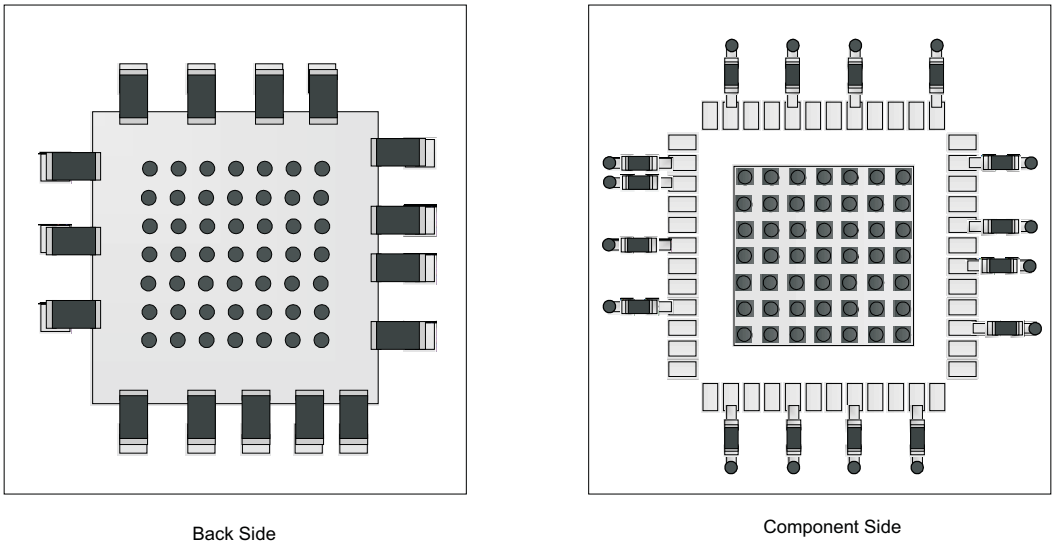


**Figure 29. CDCE18005 Power Supply Bypassing**


Copyright © 2008–2012, Texas Instruments Incorporated

## APPLICATION INFORMATION AND GENERAL USAGE HINTS

### Fan-out Buffer

Each output of the CDCE18005 can be configured as a fan-out buffer (divider bypassed) or fan-out buffer with divide and skew control functionality.

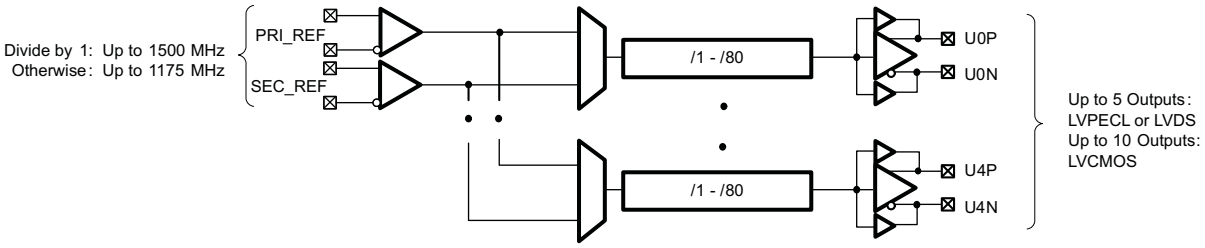


**Figure 30. CDCE18005 Fan-out Buffer Mode**

### Clock Buffer with Crystal Input

The CDCE18005 can distribute 5–10 low noise clocks from a single crystal as follows:

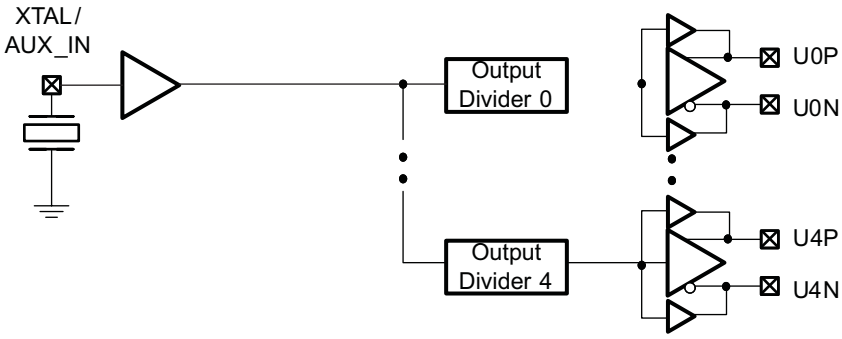


**Figure 31. CDCE18005 Clock Generator Mode**

### Clock Distribution – Mixed Mode

The following table presents a common scenario where the CDCE18005 can function as a clock switch that accepts LVDS and crystal inputs and drives LVDS, LVPECL and LVCMOS outputs.

| CLOCK FREQUENCY | INPUT/OUTPUT | FORMAT | NUMBER | CDCE18005 PORT | COMMENT |
|---|---|---|---|---|---|
| 491.52 MHz | Input | LVDS | 1 | SEC_IN | Reference |
| 125 MHz | Input | LVDS | 1 | PRI_IN | Reference from backplane |
| 10 MHz | Input | AT-Cut | 1 | AUX_IN | Low end crystal oscillator |
| 122.88 MHz | Output | LVDS | 1 | U0 | SerDes Clock |
| 491.52 MHz | Output | LVPECL | 1 | U1 | ASIC |
| 125 MHz | Output | LVPECL | 1 | U2 | FPGA |
| 30.72 MHz | Outputs | LVCMOS | 2 | U3 | ASIC |
| 10 MHz | Outputs | LVCMOS | 2 | U4 | CPU, DSP |

Copyright © 2008–2012, Texas Instruments Incorporated

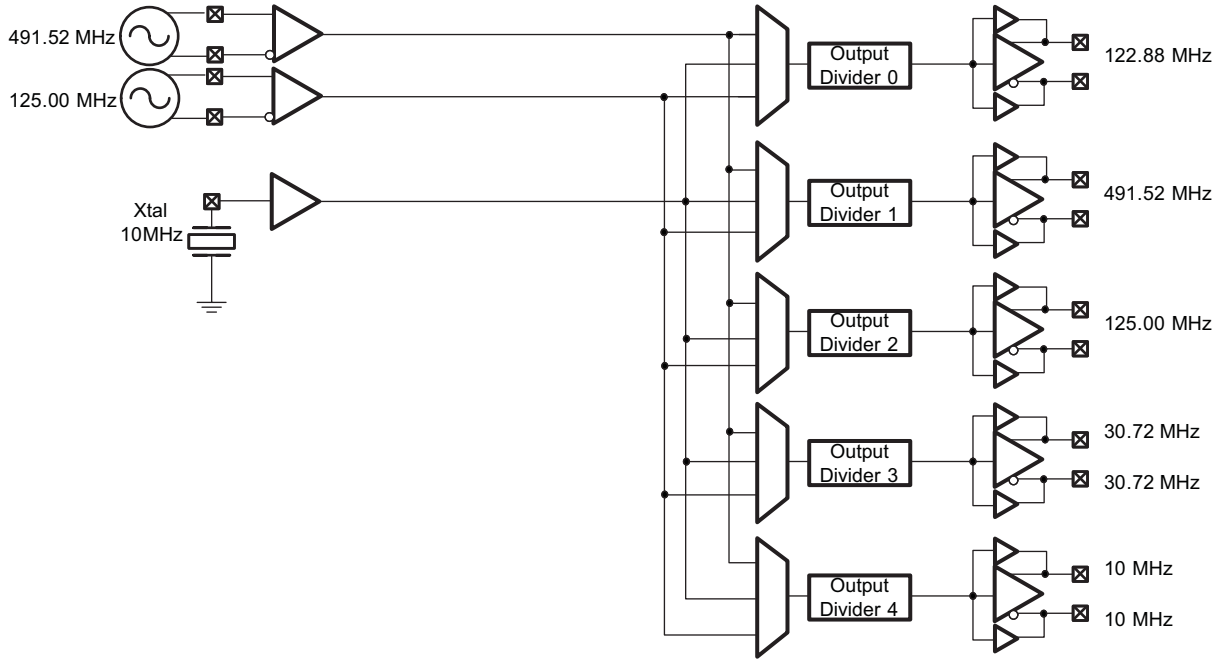


**Figure 32. CDCE18005 Mixed Mode Clock Distribution Example**


Copyright © 2008–2012, Texas Instruments Incorporated

# REVISION HISTORY

| Changes from Original (November 2008) to Revision A | Page |
|---|---|
| • Changed Title From: Five/Ten Output Clock Generator/Buffer To: Five/Ten Output Clock Programmable/Buffer | 1 |
| • Changed Flexible Inputs in the Features list | 1 |
| • Deleted Integrated EEPROM item from Features list | 1 |
| • Added the Pin Out drawing and updated the Pin Functions table | 2 |
| • Added note (1) to the Pin Functions table | 3 |
| • Added under bar in Pin Names (43, 13, 45, 46, 3 and 2) and deleted space | 3 |
| • Changed PRI_IN To PRI_REF and SEC_IN to SEC_REF in images and text throughout the data sheet | 4 |
| • Changed the ELECTRICAL CHARACTERISTICS OPERATING CONDITIONS table | 9 |
| • Changed the TIMING REQUIREMENTS table | 14 |
| • Changed From: Jitter RMS 10k≈5MHz To: Jitter RMS 10k–20MH in Table 1 | 14 |
| • Deleted the Reference 25.00 MHz column from Table 2 and changed Jitter RMS From: 10k≈20 Mhz To: 10k–5MHz. | 14 |
| • Deleted the SPI Control Interface Timing section | 14 |
| • Deleted Figure CDCE18005 Interface and Control block illustration | 15 |
| • Deleted Figure CDCE18005 SPI Communications Format | 15 |
| • Added new section SPI Interface Master | 16 |
| • Deleted the last row of the Register Default Setting table - (REG0008 (RAM) | 19 |
| • Deleted the first four rows of Table 5 through Table 13 - Bit Names A0, A1, A2, and A3. Added a note to Table 5 through Table 9 | 20 |
| • Changed Table 12 RAM BIT 26 From: Read only; always reads "1" | 27 |
| • Changed Table 12 RAM BIT 27 From: EEPROM Status | 27 |
| • Added note to Table 13 | 28 |
| • Changed Table 14 - Output Buffer coulmn From: Disbled or Enabled To: Hi-Z or From: Enable or Disabled To: Hi-Z | 29 |
| • Added Table 20 - CDCE18005 Output Divider Settings | 35 |
| • Changed Figure 25 Clock IN label From: Cloclk IN (from SMART_MUX) | 36 |
| • Changed Equation 3 | 36 |
| • Added new section - Cystal Input Interface | 44 |
| • Changed Table 28 | 45 |

| Changes from Revision A (June 2011) to Revision B | Page |
|---|---|
| • Changed pin 2 From: SEC_REF+ To SEC_REF- and pin 3 From SEC_REF- To: SEC_REF+ | 2 |

## PACKAGING INFORMATION

| Orderable part number | Status (1) | Material type (2) | Package \| Pins | Package qty \| Carrier | RoHS (3) | Lead finish/ Ball material (4) | MSL rating/ Peak reflow (5) | Op temp (°C) | Part marking (6) |
|---|---|---|---|---|---|---|---|---|---|
| CDCE18005RGZR | Active | Production | VQFN (RGZ) \| 48 | 2500 \| LARGE T&R | Yes | NIPDAUAG | Level-3-260C-168 HR | -40 to 85 | CDCE 18005 |
| CDCE18005RGZR.B | Active | Production | VQFN (RGZ) \| 48 | 2500 \| LARGE T&R | Yes | NIPDAUAG | Level-3-260C-168 HR | -40 to 85 | CDCE 18005 |
| CDCE18005RGZT | Active | Production | VQFN (RGZ) \| 48 | 250 \| SMALL T&R | Yes | NIPDAUAG | Level-3-260C-168 HR | -40 to 85 | CDCE 18005 |
| CDCE18005RGZT.B | Active | Production | VQFN (RGZ) \| 48 | 250 \| SMALL T&R | Yes | NIPDAUAG | Level-3-260C-168 HR | -40 to 85 | CDCE 18005 |

(1) **Status:** For more details on status, see our product life cycle.

(2) **Material type:** When designated, preproduction parts are prototypes/experimental devices, and are not yet approved or released for full production. Testing and final process, including without limitation quality assurance, reliability performance testing, and/or process qualification, may not yet be complete, and this item is subject to further changes or possible discontinuation. If available for ordering, purchases will be subject to an additional waiver at checkout, and are intended for early internal evaluation purposes only. These items are sold without warranties of any kind.

(3) **RoHS values:** Yes, No, RoHS Exempt. See the TI RoHS Statement for additional information and value definition.

(4) **Lead finish/Ball material:** Parts may have multiple material finish options. Finish options are separated by a vertical ruled line. Lead finish/Ball material values may wrap to two lines if the finish value exceeds the maximum column width.

(5) **MSL rating/Peak reflow:** The moisture sensitivity level ratings and peak solder (reflow) temperatures. In the event that a part has multiple moisture sensitivity ratings, only the lowest level per JEDEC standards is shown. Refer to the shipping label for the actual reflow temperature that will be used to mount the part to the printed circuit board.

(6) **Part marking:** There may be an additional marking, which relates to the logo, the lot trace code information, or the environmental category of the part.

Multiple part markings will be inside parentheses. Only one part marking contained in parentheses and separated by a "~" will appear on a part. If a line is indented then it is a continuation of the previous line and the two combined represent the entire part marking for that device.

**Important Information and Disclaimer:**The information provided on this page represents TI's knowledge and belief as of the date that it is provided. TI bases its knowledge and belief on information provided by third parties, and makes no representation or warranty as to the accuracy of such information. Efforts are underway to better integrate information from third parties. TI has taken and continues to take reasonable steps to provide representative and accurate information but may not have conducted destructive testing or chemical analysis on incoming materials and chemicals. TI and TI suppliers consider certain information to be proprietary, and thus CAS numbers and other limited information may not be available for release.

In no event shall TI's liability arising out of such information exceed the total purchase price of the TI part(s) at issue in this document sold by TI to Customer on an annual basis.

## TAPE AND REEL INFORMATION

**REEL DIMENSIONS**

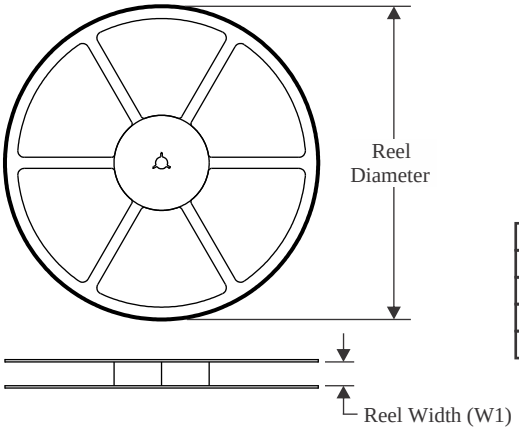


**TAPE DIMENSIONS**

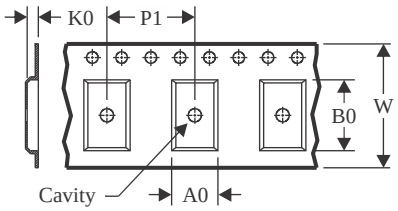


| | |
|---|---|
| A0 | Dimension designed to accommodate the component width |
| B0 | Dimension designed to accommodate the component length |
| K0 | Dimension designed to accommodate the component thickness |
| W | Overall width of the carrier tape |
| P1 | Pitch between successive cavity centers |

**QUADRANT ASSIGNMENTS FOR PIN 1 ORIENTATION IN TAPE**

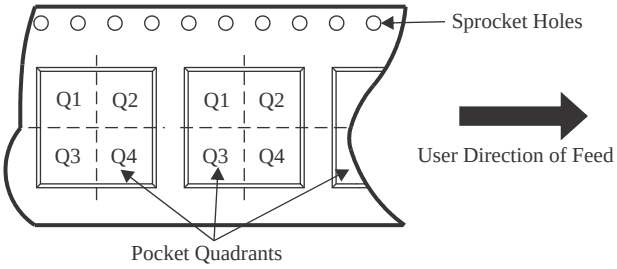


*All dimensions are nominal

| Device | Package Type | Package Drawing | Pins | SPQ | Reel Diameter (mm) | Reel Width W1 (mm) | A0 (mm) | B0 (mm) | K0 (mm) | P1 (mm) | W (mm) | Pin1 Quadrant |
|---|---|---|---|---|---|---|---|---|---|---|---|---|
| CDCE18005RGZR | VQFN | RGZ | 48 | 2500 | 330.0 | 16.4 | 7.3 | 7.3 | 1.5 | 12.0 | 16.0 | Q2 |

TAPE AND REEL BOX DIMENSIONS

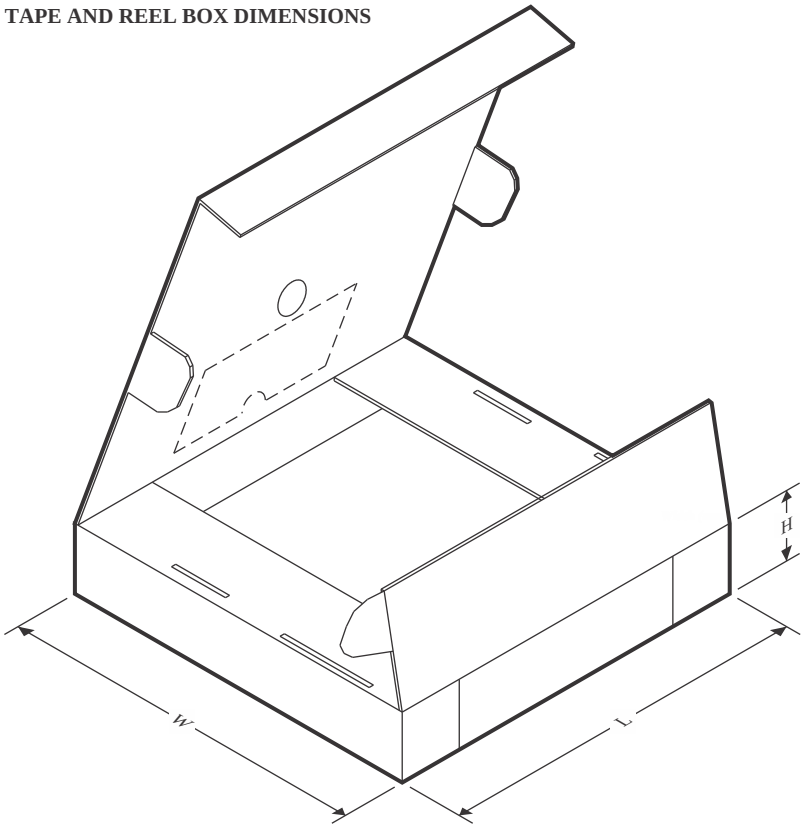


*All dimensions are nominal

| Device | Package Type | Package Drawing | Pins | SPQ | Length (mm) | Width (mm) | Height (mm) |
|---|---|---|---|---|---|---|---|
| CDCE18005RGZR | VQFN | RGZ | 48 | 2500 | 350.0 | 350.0 | 43.0 |

# GENERIC PACKAGE VIEW

## RGZ 48

## VQFN - 1 mm max height

**7 x 7, 0.5 mm pitch**

PLASTIC QUADFLAT PACK- NO LEAD

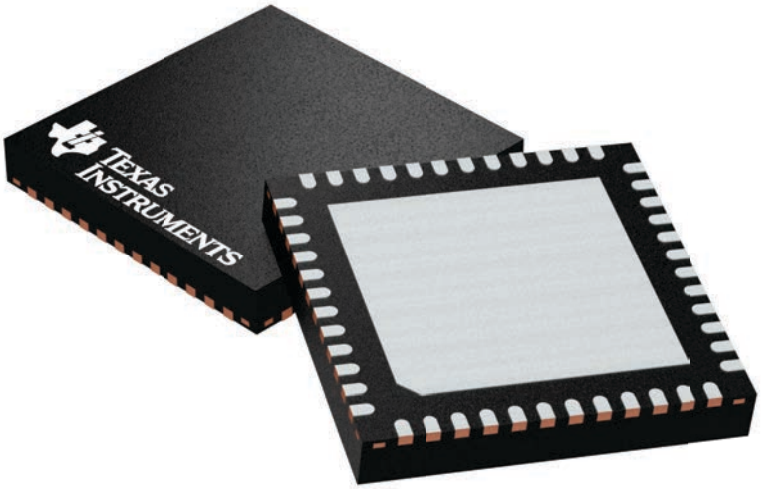


Images above are just a representation of the package family, actual package may vary.
Refer to the product data sheet for package details.

4224671/A

# RGZ0048D

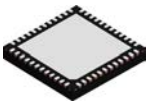

# PACKAGE OUTLINE

## VQFN - 1 mm max height

PLASTIC QUAD FLATPACK - NO LEAD

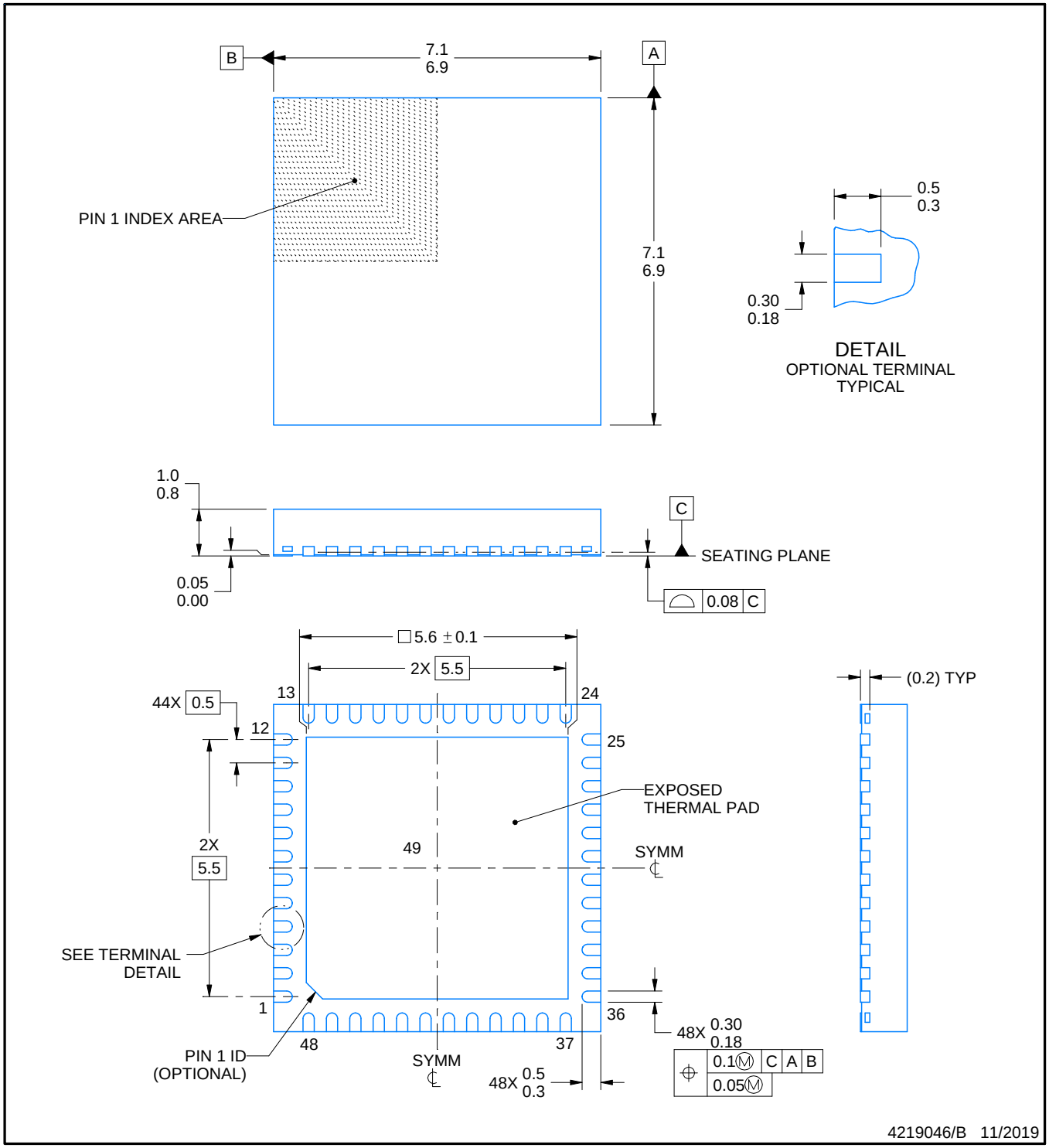


NOTES:

1. All linear dimensions are in millimeters. Any dimensions in parenthesis are for reference only. Dimensioning and tolerancing per ASME Y14.5M.
2. This drawing is subject to change without notice.
3. The package thermal pad must be soldered to the printed circuit board for thermal and mechanical performance.

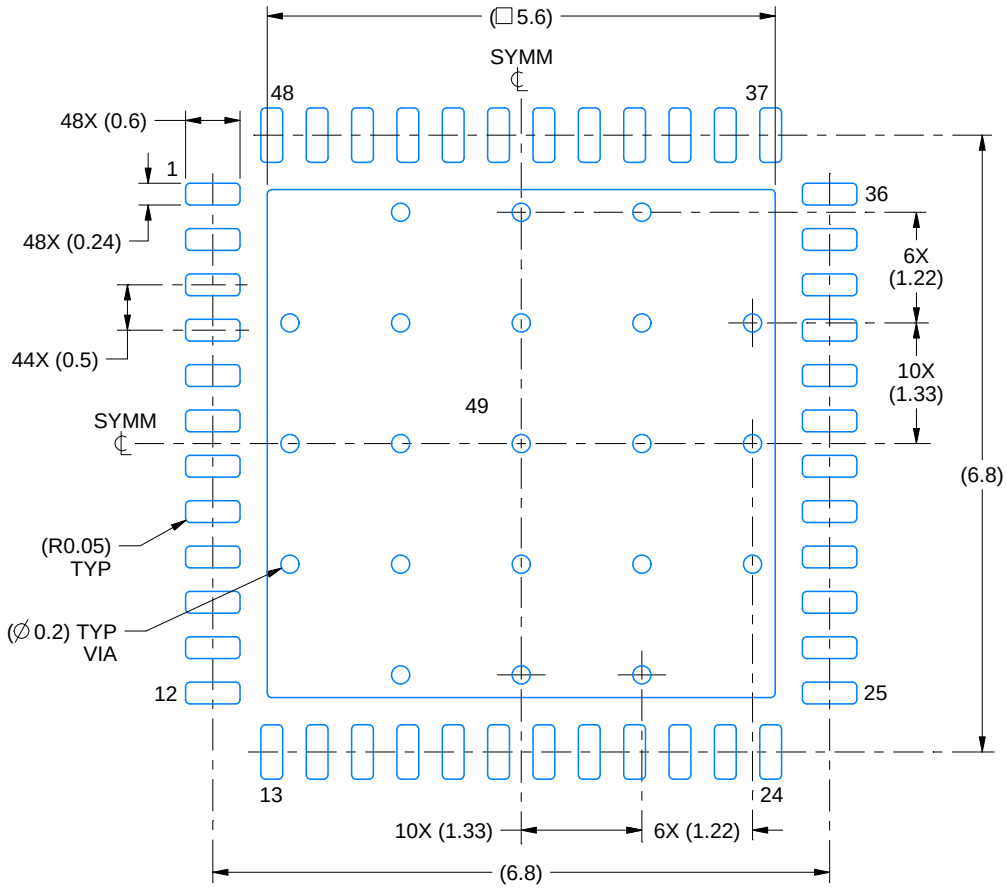


LAND PATTERN EXAMPLE
EXPOSED METAL SHOWN
SCALE:12X

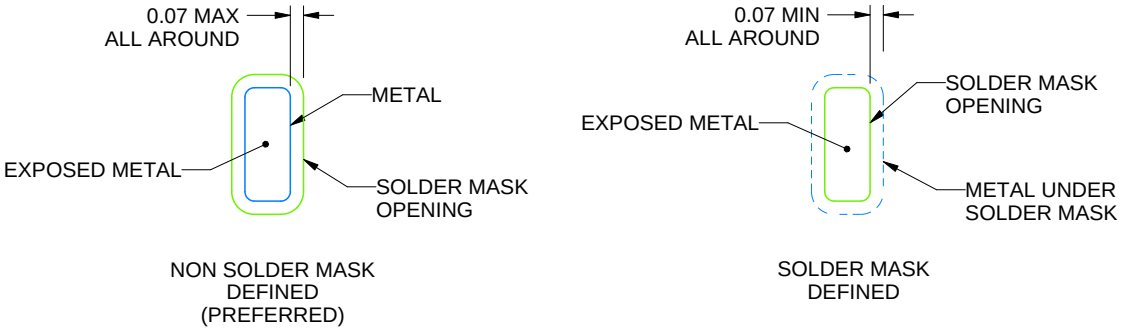


SOLDER MASK DETAILS

4219046/B 11/2019

NOTES: (continued)

4. This package is designed to be soldered to a thermal pad on the board. For more information, see Texas Instruments literature number SLUA271 (www.ti.com/lit/slua271).
5. Vias are optional depending on application, refer to device data sheet. If any vias are implemented, refer to their locations shown on this view. It is recommended that vias under paste be filled, plugged or tented.

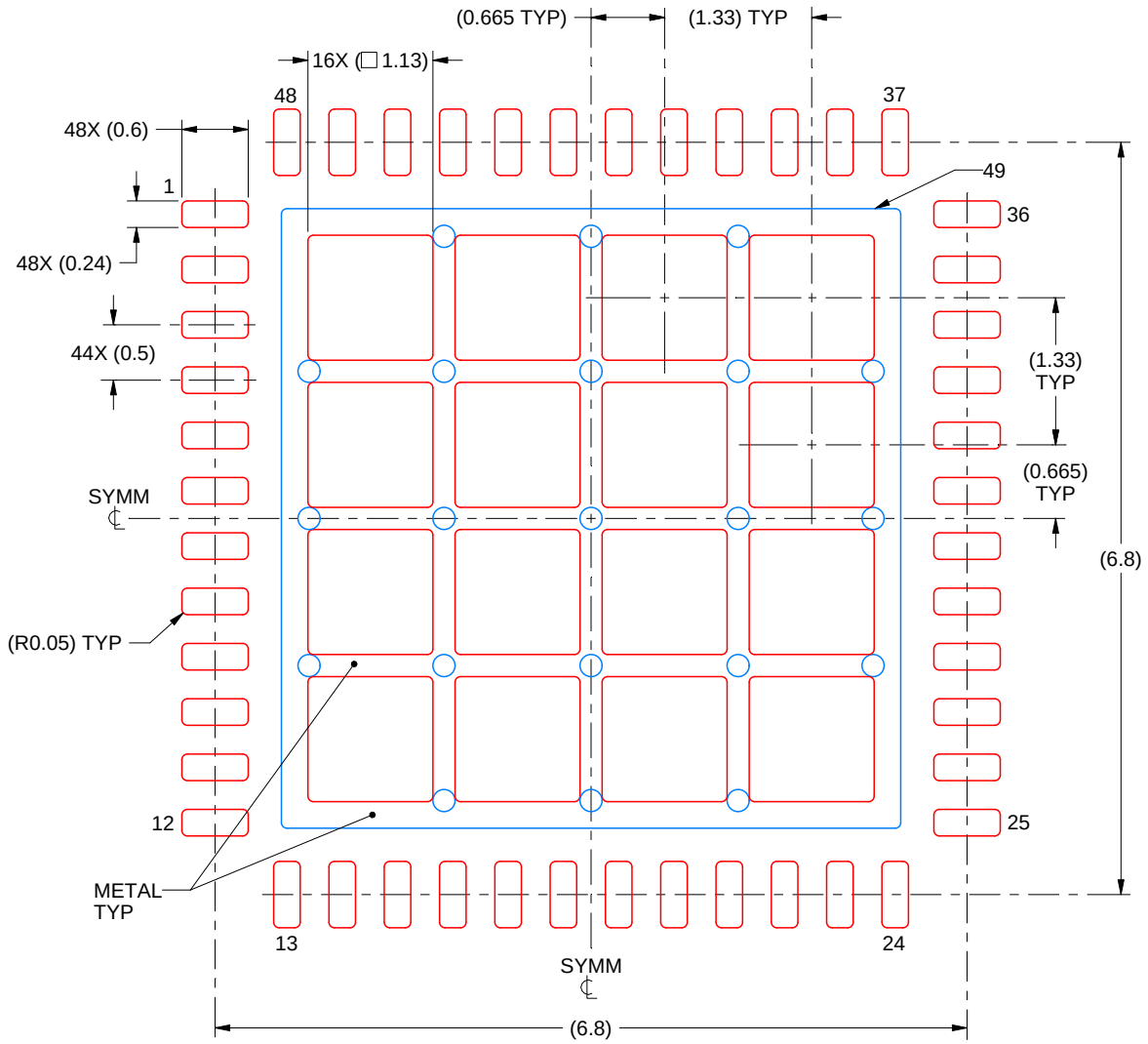


SOLDER PASTE EXAMPLE
BASED ON 0.125 mm THICK STENCIL

EXPOSED PAD 49
66% PRINTED SOLDER COVERAGE BY AREA UNDER PACKAGE
SCALE:15X

4219046/B 11/2019

NOTES: (continued)

6. Laser cutting apertures with trapezoidal walls and rounded corners may offer better paste release. IPC-7525 may have alternate design recommendations.

# IMPORTANT NOTICE AND DISCLAIMER

TI PROVIDES TECHNICAL AND RELIABILITY DATA (INCLUDING DATA SHEETS), DESIGN RESOURCES (INCLUDING REFERENCE DESIGNS), APPLICATION OR OTHER DESIGN ADVICE, WEB TOOLS, SAFETY INFORMATION, AND OTHER RESOURCES “AS IS” AND WITH ALL FAULTS, AND DISCLAIMS ALL WARRANTIES, EXPRESS AND IMPLIED, INCLUDING WITHOUT LIMITATION ANY IMPLIED WARRANTIES OF MERCHANTABILITY, FITNESS FOR A PARTICULAR PURPOSE OR NON-INFRINGEMENT OF THIRD PARTY INTELLECTUAL PROPERTY RIGHTS.

These resources are intended for skilled developers designing with TI products. You are solely responsible for (1) selecting the appropriate TI products for your application, (2) designing, validating and testing your application, and (3) ensuring your application meets applicable standards, and any other safety, security, regulatory or other requirements.

These resources are subject to change without notice. TI grants you permission to use these resources only for development of an application that uses the TI products described in the resource. Other reproduction and display of these resources is prohibited. No license is granted to any other TI intellectual property right or to any third party intellectual property right. TI disclaims responsibility for, and you will fully indemnify TI and its representatives against, any claims, damages, costs, losses, and liabilities arising out of your use of these resources.

TI’s products are provided subject to TI’s Terms of Sale or other applicable terms available either on ti.com or provided in conjunction with such TI products. TI’s provision of these resources does not expand or otherwise alter TI’s applicable warranties or warranty disclaimers for TI products.

TI objects to and rejects any additional or different terms you may have proposed.

Mailing Address: Texas Instruments, Post Office Box 655303, Dallas, Texas 75265
Copyright © 2025, Texas Instruments Incorporated