TPS53315 12-A Step-Down Regulator with Integrated Switcher

1 Features

- Conversion input voltage range: 3 V to 15 V
- VDD input voltage range: 4.5 V to 25 V
- Output voltage range: 0.6 V to 5.5 V
- 5-V LDO output
- Integrated power MOSFETs with 12-A continuous output current
- < 10-µA shutdown current
- Auto-skip Eco-mode for light-load efficiency
- D-CAP integrated circuit with fast transient response
- Selectable switching frequency from 250 kHz to 1 MHz with an external resistor
- Built-in 1%, 0.6-V reference
- 0.7-ms, 1.4-ms, 2.8-ms and 5.6-ms selectable internal voltage servo soft start
- Pre-charged start-up capability
- Integrated boost switch
- Adjustable overcurrent limit through external resistor
- Overvoltage, undervoltage, UVLO, and overtemperature protection
- Support all ceramic output capacitors
- Open drain power-good indication
- 40-pin VQFN package with thermal pad

2 Applications

- Server and desktop computers
- Notebook computers
- Telecommunication equipments

3 Description

TPS53315 is a D-CAP integrated circuit, 12-A synchronous switcher with integrated MOSFETs. The device is designed for ease of use, low external component count, and small package power systems.

This device features single-rail input support, one 19-mΩ and one 7-mΩ integrated MOSFET, accurate 1%, 0.6-V Reference, and integrated boost switch. A sample of competitive features include: greater than 96% maximum efficiency, 3-V to 15-V wide input voltage range, very low external component count, D-CAP integrated circuit for super fast transient, selectable auto-skip and PWM operation, internal soft-start control, adjustable frequency, and no need for compensation.

The conversion input voltage ranges from 3 V to 15 V, the supply voltage range is from 4.5 V to 25 V, and the output voltage range is from 0.6 V to 5.5 V.

The TPS53315 is available in a 5 mm × 7 mm 40-pin, VQFN package and is specified from –40°C to 85°C.

Package Information

PART NUMBER	PACKAGE(1)	PACKAGE SIZE(2)
TPS53315	RGF (VQFN, 40)	7.00 mm × 5.00 mm

(1) For more information, see Section 10.
(2) The package size (length × width) is a nominal value and includes pins, where applicable.

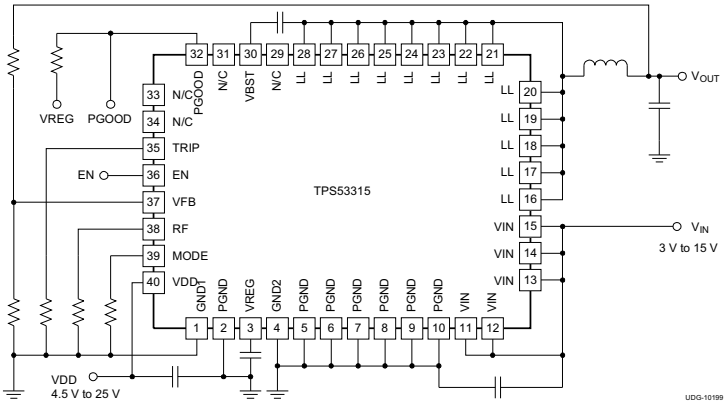

Simplified Application

An IMPORTANT NOTICE at the end of this data sheet addresses availability, warranty, changes, use in safety-critical applications, intellectual property matters and other important disclaimers. PRODUCTION DATA.

Table of Contents

1 Features....1
2 Applications....1
3 Description....1
4 Pin Configuration and Functions....3
5 Specifications....5
5.1 Absolute Maximum Ratings....5
5.2 ESD Ratings....5
5.3 Recommended Operating Conditions....5
5.4 Thermal Information....6
5.5 Electrical Characteristics....6
5.6 Typical Characteristics....8
6 Detailed Description....11
6.1 Overview....11
6.2 Functional Block Diagram....11
6.3 Feature Description....12
6.4 Device Functional Modes....16
7 Application and Implementation....17
7.1 Application Information....17
7.2 Typical Application....17
7.3 Power Supply Recommendations....25
7.4 Layout....26
8 Device and Documentation Support....28
8.1 Receiving Notification of Documentation Updates....28
8.2 Support Resources....28
8.3 Trademarks....28
8.4 Electrostatic Discharge Caution....28
8.5 Glossary....28
9 Revision History....28
10 Mechanical, Packaging, and Orderable Information....28

Copyright © 2023 Texas Instruments Incorporated

4 Pin Configuration and Functions

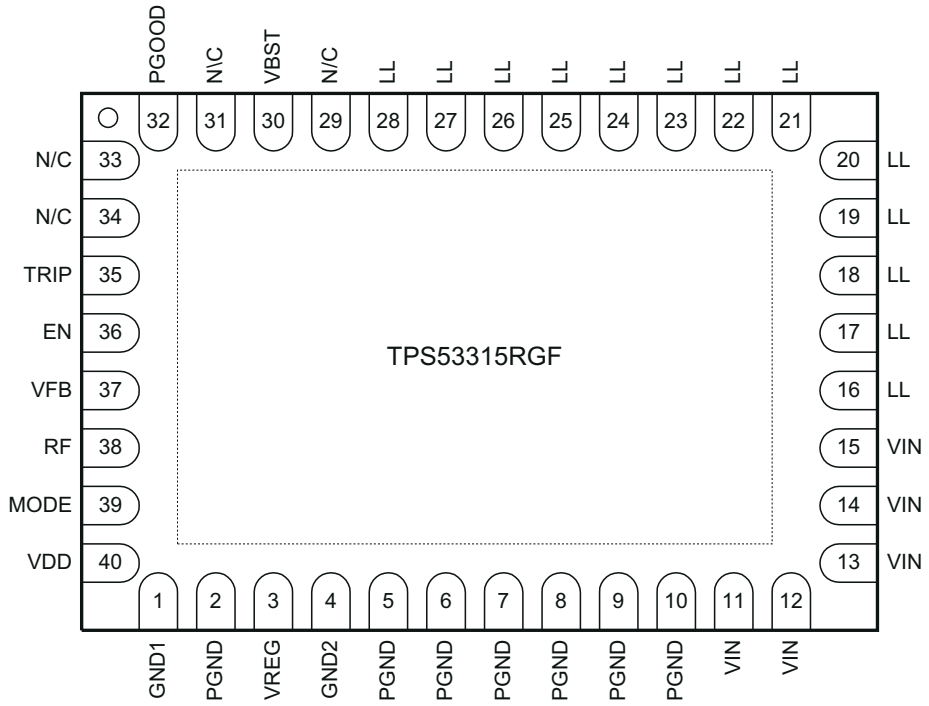

Figure 4-1. RGF Package 40-Pin VQFN With Exposed Thermal Pad Top View

Table 4-1. Pin Functions

PIN		TYPE[(1)]	DESCRIPTION
NAME	NO.		
EN	36	I	Enable pin
GND1	1	G	GND for controller
GND2	4	G	GND for half-bridge
LL	16	B	Output of converted power; connect this pin to the output inductor.
	17		
	18		
	19		
	20		
	21		
	22		
	23		
	24		
	25		
	26		
	27		
	28		
MODE	39	I	Soft-start and skip/CCM selection; connect a resistor to select soft-start time using Table 6-2. The soft-start time is detected and stored into internal register during start-up.
N/C	29		No connection
	31		
	33		
	34		

Table 4-1. Pin Functions (continued)

PIN		TYPE[(1)]	DESCRIPTION
NAME	NO.		
PGOOD	32	O	Open drain power good flag provides a 1-ms start up delay after the VFB pin voltage falls within specified limits. When the VFB pin voltage goes outside the specified limits, the PGOOD pin goes low within 10 µs.
PGND	2	G	Power GND
	5		
	6		
	7		
	8		
	9		
	10		
RF	38	I	Switching frequency selection. Connect a resistance to GND or VREG to select switching frequency using Table 6-1. The switching frequency is detected and stored during the startup.
TRIP	35	I	OCL detection threshold setting pin, 10 µA at room temperature, 4700 ppm/°C current is sourced and set the OCL trip voltage as follows: $V_{OCL} = V_{TRIP}/8$ ($V_{TRIP} \leq 1.2$ V, $V_{OCL} \leq 150$ mV)
VBST	30	P	Supply input for high-side FET gate driver (boost terminal); connect capacitor from this pin to LL-node. Internally connected to the VREG pin through bootstrap MOSFET switch.
VDD	40	P	Controller power supply input
VFB	37	I	Output feedback input; connect this pin to V_{OUT} through a resistor divider.
VIN	11	P	Conversion power input
	12		
	13		
	14		
	15		
VREG	3	P	5-V LDO output

(1) I = Input, O = Output, B = Bidirectional, G = Ground, P = Supply

Copyright © 2023 Texas Instruments Incorporated

5 Specifications

5.1 Absolute Maximum Ratings

over operating free-air temperature range (unless otherwise noted)[1]

			MIN	MAX	UNIT
Input voltage	VIN (main supply)		–0.3	17	V
	VDD		–0.3	28	
	VBST		–0.3	24	
	VBST(with respect to LL)		–0.3	7	
	EN, TRIP, VFB, RF, MODE		–0.3	7	
Output voltage	LL	DC	–1	23	V
		Pulse < 20 ns, E = 5 µJ		–7	
	PGOOD, VREG		–0.3	7	
	PGND		–0.3	0.3	
Source/sink current	VBST			50	mA
Lead temperature 1,6 mm (1/16 inch) from case for 10 seconds				300	°C
Operating free-air temperature, T_A			–40	85	°C
Junction temperature, T_J			–40	150	°C
Storage temperature, T_{stg}			–55	150	°C

(1) Stresses beyond those listed under *Absolute Maximum Ratings* may cause permanent damage to the device. These are stress ratings only, which do not imply functional operation of the device at these or any other conditions beyond those indicated under *Recommended Operating Conditions*. Exposure to absolute-maximum-rated conditions for extended periods may affect device reliability.

5.2 ESD Ratings

		VALUE	UNIT
$V_{(ESD)}$ Electrostatic discharge	Human-body model (HBM), per ANSI/ESDA/JEDEC JS-001[1]	±2000	V
	Charged-device model (CDM), per JEDEC specification JESD22-C101[2]	±500	

(1) JEDEC document JEP155 states that 500-V HBM allows safe manufacturing with a standard ESD control process.
(2) JEDEC document JEP157 states that 250-V CDM allows safe manufacturing with a standard ESD control process.

5.3 Recommended Operating Conditions

over operating free-air temperature range (unless otherwise noted)

		MIN	NOM	MAX	UNIT
Input voltage	VIN (main supply)	3		15	V
	VDD	4.5		25	
	VBST	4.5		21	
	VBST(with respect to LL)	4.5		6.5	
	EN, TRIP, VFB, RF, MODE	–0.1		6.5	
Output voltage	LL	–0.8		15	V
	PGOOD, VREG	–0.1		6.5	
Source/sink current	VBST			50	mA
Junction temperature , T_J		–40		125	°C

Copyright © 2023 Texas Instruments Incorporated

5.4 Thermal Information

THERMAL METRIC[1]		TPS53315 RGF (VQFN) 40 PINS	UNIT
$R_{\theta JA}$	Junction-to-ambient thermal resistance	35.8	°C/W
$R_{\theta JC(top)}$	Junction-to-case (top) thermal resistance	23.8	°C/W
$R_{\theta JB}$	Junction-to-board thermal resistance	10.1	°C/W
ψ_{JT}	Junction-to-top characterization parameter	0.4	°C/W
ψ_{JB}	Junction-to-board characterization parameter	10.0	°C/W
$R_{\theta JC(bot)}$	Junction-to-case (bottom) thermal resistance	2.8	°C/W

(1) For more information about traditional and new thermal metrics, see the *Semiconductor and IC Package Thermal Metrics* application report, SPRA953.

5.5 Electrical Characteristics

over recommended free-air temperature range, V_{DD} = 12 V (unless otherwise noted)

PARAMETER		TEST CONDITIONS	MIN	TYP	MAX	UNIT
SUPPLY VOLTAGE AND SUPPLY CURRENT						
V_{VIN}	VIN pin power conversion input voltage		3		15	V
V_{DD}	Supply input voltage		4.5		25	V
$I_{VIN(leak)}$	VIN pin leakage current	V_{EN} = 0 V			1	µA
I_{VDD}	VDD supply current	VDD current, T_A = 25°C, No Load, V_{EN} = 5 V, V_{VFB} = 0.630 V		420	590	µA
I_{VDDSDN}	VDD shutdown current	VDD current, T_A = 25°C, No Load, V_{EN} = 0 V			10	µA
INTERNAL REFERENCE VOLTAGE						
V_{VFB}	VFB regulation voltage	VFB voltage, CCM condition[1]		0.6000		V
		T_A = 25°C	0.597	0.600	0.603	V
		T_A = 0°C to 85°C	0.5952	0.600	0.6048	
		T_A = –40°C to 85°C	0.594	0.600	0.606	
I_{VFB}	VFB input current	V_{VFB} = 0.630 V, T_A = 25°C		0.002	0.2	µA
LDO OUTPUT						
V_{VREG}	LDO output voltage	0 mA ≤ I_{VREG} ≤ 30 mA	4.77	5.0	5.35	V
I_{VREG}	LDO output current[1]	Maximum current allowed from LDO			30	mA
V_{DO}	LDO drop out voltage	V_{DD} = 4.5 V, I_{VREG} = 30 mA			295	mV
BOOT STRAP SWITCH						
V_{FBST}	Forward voltage	$V_{VREG-VBST}$, I_F = 10 mA, T_A = 25°C		0.1	0.2	V
I_{VBSTLK}	VBST leakage current	V_{VBST} = 23 V, V_{LL} = 17 V, T_A = 25°C		0.01	1.5	µA
DUTY AND FREQUENCY CONTROL						
$t_{OFF(min)}$	Minimum off time	T_A = 25°C	150	260	400	ns
$t_{ON(min)}$	Minimum on time	V_{VIN} = 17 V, V_{OUT} = 0.6 V, R_{RF} = 0 Ω to VREG, T_A = 25°C[1]		35		
SOFTSTART						
t_{SS}	Internal SS time from V_{OUT} = 0 to V_{OUT} = 95%	R_{MODE} = 39 kΩ		0.7		ms
		R_{MODE} = 100 kΩ		1.4		
		R_{MODE} = 200 kΩ		2.8		
		R_{MODE} = 470 kΩ		5.6		

Copyright © 2023 Texas Instruments Incorporated

5.5 Electrical Characteristics (continued)

over recommended free-air temperature range, V_{DD} = 12 V (unless otherwise noted)

PARAMETER		TEST CONDITIONS	MIN	TYP	MAX	UNIT
POWERGOOD						
V_{THPG}	PG threshold	PG in from lower	92.5%	96%	98.5%	
		PG in from higher	107.5%	110%	112.5%	
		PG hysteresis	2.5%	5%	7.8%	
R_{PG}	PG transistor on-resistance		15	30	55	Ω
t_{PGDEL}	PG Delay after soft-start		0.8	1	1.2	ms
LOGIC THRESHOLD AND SETTING CONDITIONS						
V_{EN}	EN voltage threshold	Enable	1.8			V
		Disable			0.6	
I_{EN}	EN input current	V_{EN} = 5 V			1	µA
f_{SW}	Switching frequency	R_{RF} = 0 Ω to GND, T_A = 25°C(2)	200	250	300	kHz
		R_{RF} = 187 kΩ to GND, T_A = 25°C(2)	250	300	350	
		R_{RF} = 619 kΩ to GND, T_A = 25°C(2)	350	400	450	
		R_{RF} = Open, T_A = 25°C(2)	450	500	550	
		R_{RF} = 866 kΩ to VREG, T_A = 25°C(2)	580	650	720	
		R_{RF} = 309 kΩ to VREG, T_A = 25°C(2)	670	750	820	
		R_{RF} = 124 kΩ to VREG, T_A = 25°C(2)	770	850	930	
		R_{RF} = 0 Ω to VREG, T_A = 25°C(2)	880	970	1070	
PROTECTION: CURRENT SENSE						
I_{TRIP}	TRIP source current	V_{TRIP} = 1 V, T_A = 25°C	9.4	10.0	10.6	µA
TC_{ITRIP}	TRIP current temperature coefficent	On the basis of 25°C(3)		4700		ppm/°C
V_{TRIP}	Current limit threshold setting range	$V_{TRIP-GND}$ voltage	0.2		1.2	V
V_{OCL}	Current limit threshold	V_{TRIP} = 1.2 V	140	150	160	mV
		V_{TRIP} = 0.2	19	26	33	
V_{OCLN}	Negative current limit threshold	V_{TRIP} = 1.2 V	–160	–150	–140	
		V_{TRIP} = 0.2 V	–33	–26	–19	
V_{AZCADJ}	Auto zero cross adjustable range	Positive	3	15		mV
		Negative		–15	–3	
PROTECTION: UVP and OVP						
V_{OVP}	OVP trip threshold	OVP detect	115%	120%	125%	
t_{OVPDEL}	OVP propagation delay time	VFB delay with 50-mV overdrive		1		µs
V_{UVP}	Output UVP trip threshold time	UVP detect	65%	70%	75%	
t_{UVPDEL}	Output UVP propagation delay time		0.8	1	1.2	ms
t_{UVPEN}	Output UVP enable delay time	from EN to UVP workable, R_{MODE} = 39 kΩ	2.0	2.6	3.2	ms
UVLO						
V_{UVVREG}	VREG UVLO threshold	Wake up	4.00	4.20	4.32	V
		Hysteresis		0.25		
THERMAL SHUTDOWN						
T_{SDN}	Thermal shutdown threshold	Shutdown temperature(3)		145		°C
		Hysteresis(3)		10		

(1) Specified by design. Not production tested.
(2) Not production tested. Test condition is V_{IN} = 12 V, V_{OUT}= 1.1 V, I_{OUT}= 5 A using application circuit shown in Figure 7-1.
(3) Specified by design. Not production tested.

Copyright © 2023 Texas Instruments Incorporated

5.6 Typical Characteristics

Inductor Values: IN06155: 1 µH, 2.3 mΩ, HCB1175-501: 0.5 µH, 0.29 mΩ

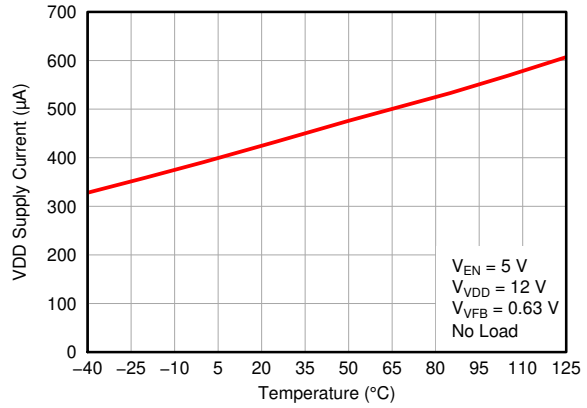

Figure 5-1. VDD Supply Current vs Temperature

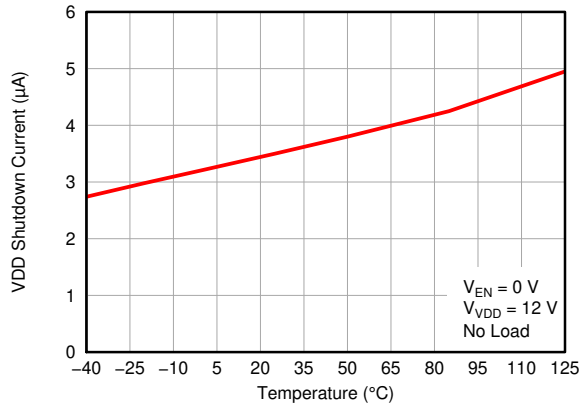

Figure 5-2. VDD Shutdown Current vs Temperature

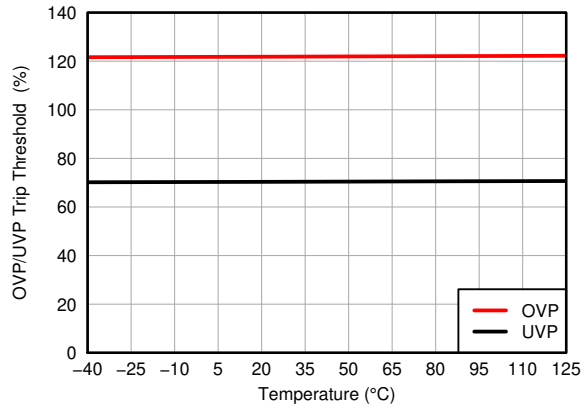

Figure 5-3. OVP/UVP Trip Threshold vs Temperature

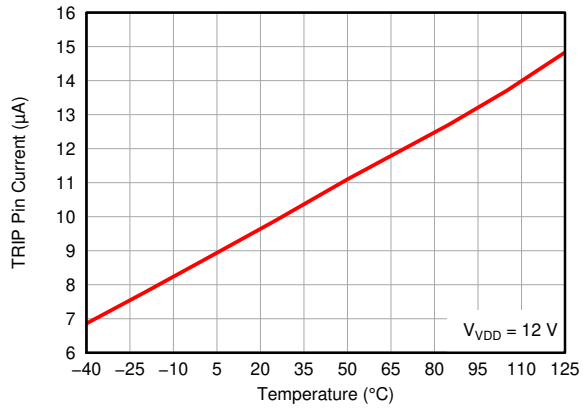

Figure 5-4. Trip Pin Current vs Temperature

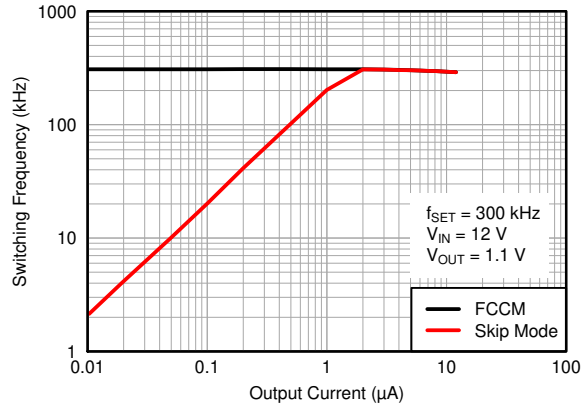

Figure 5-5. Frequency vs Temperature (f_{SET} = 300 kHz)

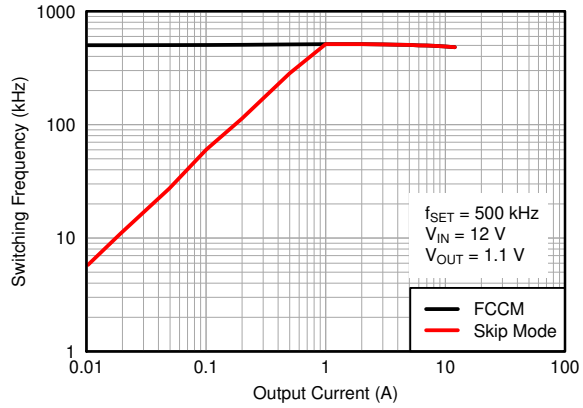

Figure 5-6. Frequency vs Temperature (f_{SET} = 500 kHz)

Copyright © 2023 Texas Instruments Incorporated

5.6 Typical Characteristics (continued)

Inductor Values: IN06155: 1 µH, 2.3 mΩ, HCB1175-501: 0.5 µH, 0.29 mΩ

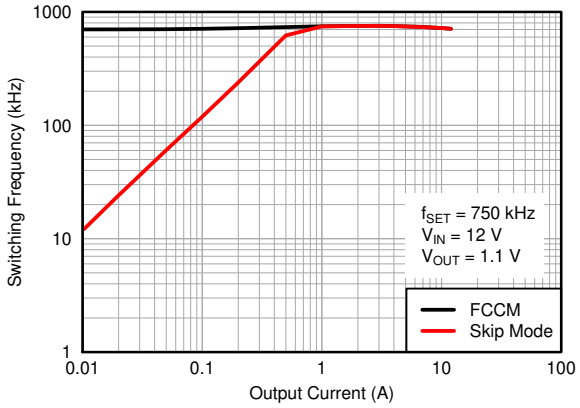

Figure 5-7. Frequency vs Temperature (f_{SET} = 750 kHz)

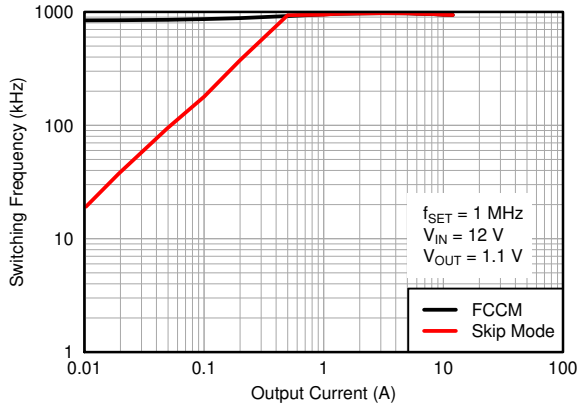

Figure 5-8. Frequency vs Temperature (f_{SET} = 1 MHz)

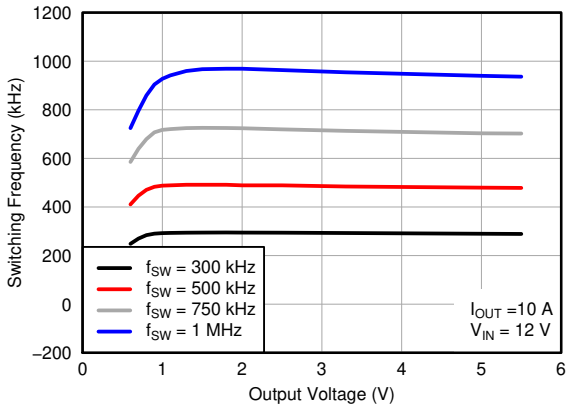

Figure 5-9. Switching Frequency vs Output Voltage

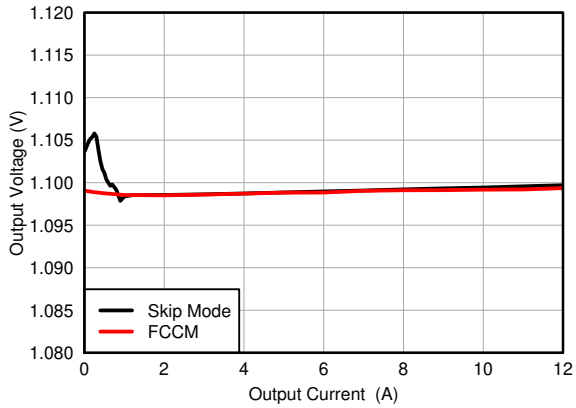

Figure 5-10. Output Voltage vs Output Current

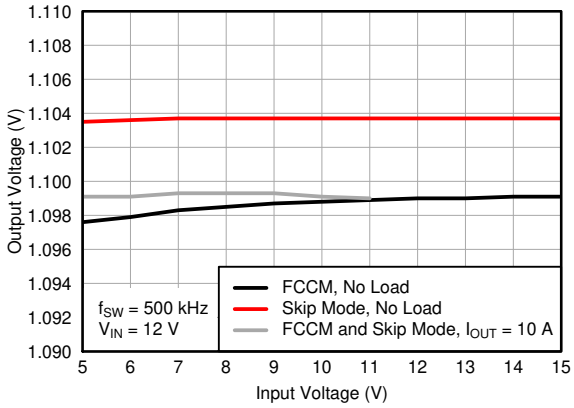

Figure 5-11. Output Voltage vs Input Voltage

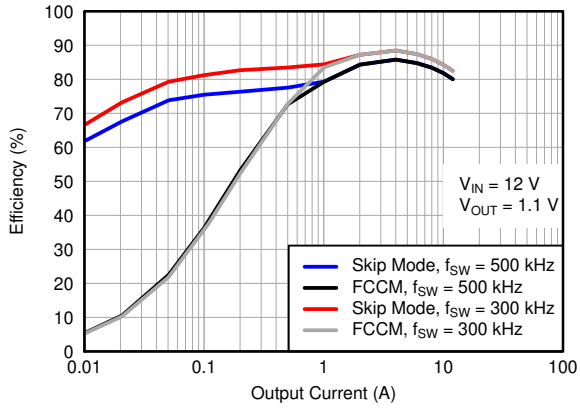

Figure 5-12. Efficiency vs Output Current, Inductor: IN06155

5.6 Typical Characteristics (continued)

Inductor Values: IN06155: 1 µH, 2.3 mΩ, HCB1175-501: 0.5 µH, 0.29 mΩ

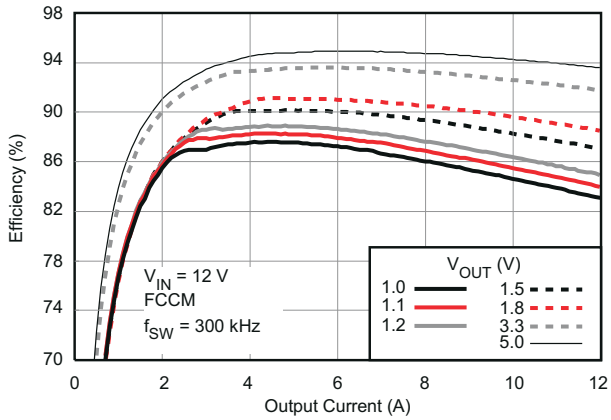

Inductors: V_{OUT} ≤ 1.8 V: HCB1175-501, V_{OUT} ≥ 3.3 V: IN06155

Figure 5-13. Efficiency vs Output Current

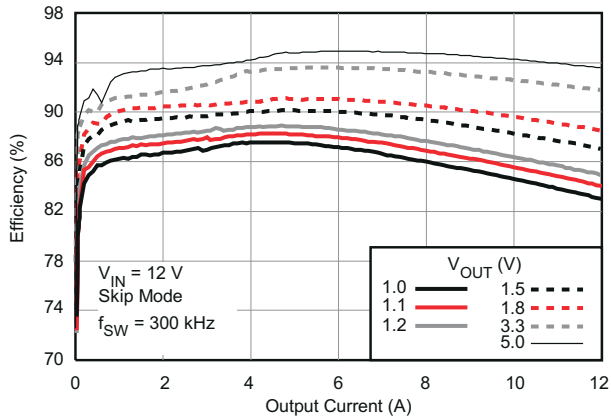

Inductors: V_{OUT} ≤ 1.8 V: HCB1175-501, V_{OUT} ≥ 3.3 V: IN06155

Figure 5-14. Efficiency vs Output Current

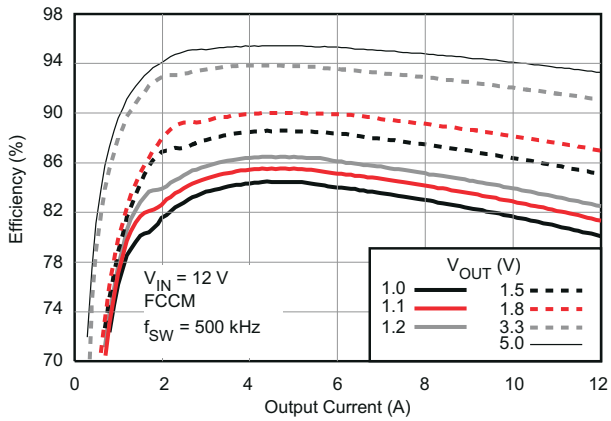

Inductors: V_{OUT} ≤ 1.8 V: HCB1175-501, V_{OUT} ≥ 3.3 V: IN06155

Figure 5-15. Efficiency vs Output Current

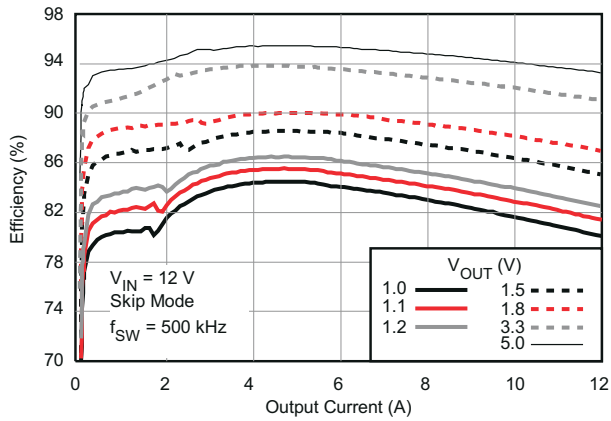

Inductors: V_{OUT} ≤ 1.8 V: HCB1175-501, V_{OUT} ≥ 3.3 V: IN06155

Figure 5-16. Efficiency vs Output Current

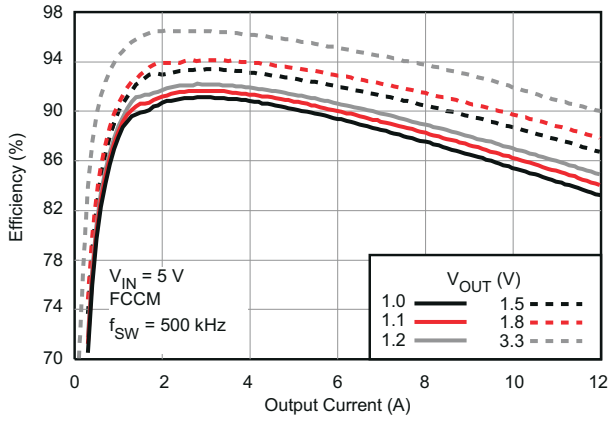

Inductor: HCB1175-501

Figure 5-17. Efficiency vs Output Current

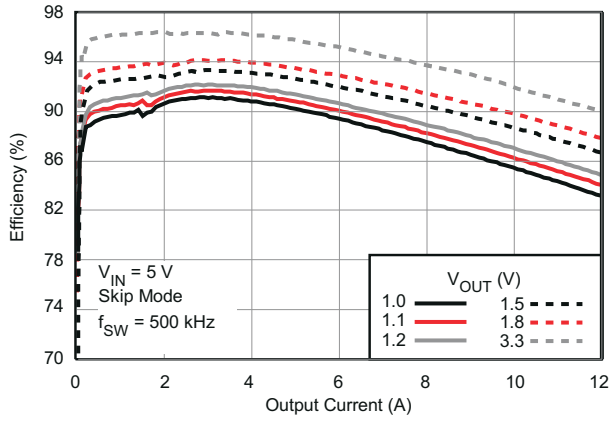

Inductor: HCB1175-501

Figure 5-18. Efficiency vs Output Current

Copyright © 2023 Texas Instruments Incorporated

6 Detailed Description

6.1 Overview

The TPS53315 is a high-efficiency, single channel, synchronous buck converter designed for low output voltage point-of-load applications in computing and similar digital consumer applications. The device features proprietary D-CAP integrated circuit combined with an adaptive on-time architecture. This combination is designed for building modern low duty ratio, ultra-fast load step response DC-DC converters. The output voltage ranges from 0.6 V to 5.5 V. The conversion input voltage range is from 3 V up to 15 V. The D-CAP integrated circuit uses the ESR of the output capacitors to sense the device current. One advantage of this control scheme is that this control scheme does not require an external phase compensation network. This allows a simple design with a low external component count. Eight preset switching frequency values can be chosen using a resistor connected from the RF pin to ground or the VREG pin. Adaptive on-time control tracks the preset switching frequency over a wide input and output voltage range while allowing the switching frequency to increase at the step-up of the load.

The TPS53315 has a MODE pin to select between auto-skip mode and forced continuous conduction mode (FCCM) for light load conditions. The MODE pin also sets the selectable soft-start time ranging from 0.7 ms to 5.6 ms.

6.2 Functional Block Diagram

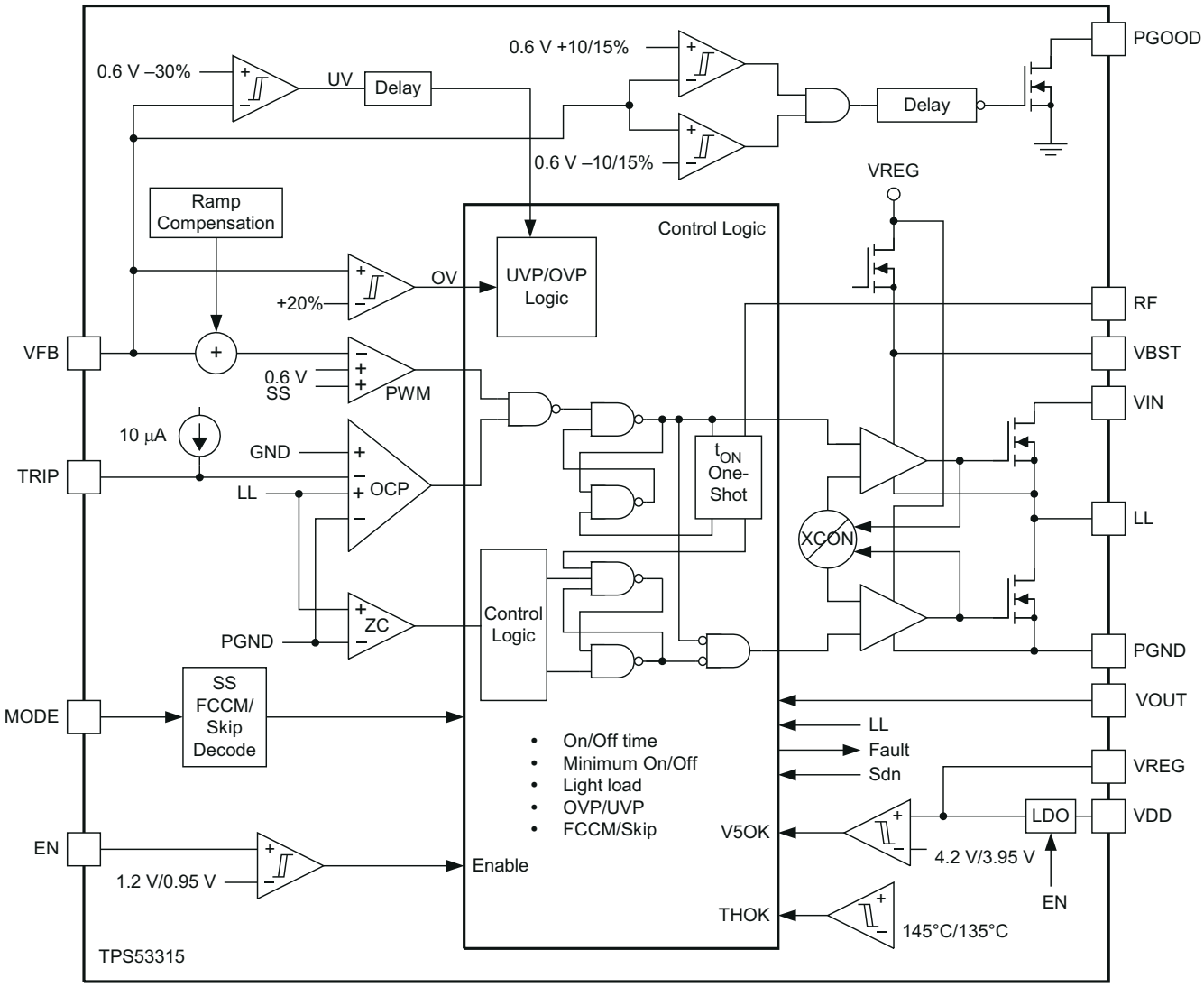

6.3 Feature Description

6.3.1 D-CAP™ Integrated Circuit with Adaptive On-Time

The TPS53315 does not have a dedicated oscillator to determine switching frequency. However, the device operates with pseudo-constant frequency by feed-forwarding the input and output voltages into the on-time one-shot timer. The adaptive on-time control adjusts the on-time to be inversely proportional to the input voltage and proportional to the output voltage $\left(t_{ON} \propto \frac{V_{OUT}}{V_{IN}}\right)$.

This makes the switching frequency fairly constant in steady state conditions over a wide input voltage range. The switching frequency is selectable from eight preset values by a resistor connected between the RF pin and GND or between the RF pin and the VREG pin as shown in Table 6-1. Leaving the resistance open sets the switching frequency to 500 kHz.

Table 6-1. Resistor and Switching Frequency

RESISTOR (R_{RF}) CONNECTIONS	SWITCHING FREQUENCY (kHz)
0 Ω to GND	250
187 kΩ to GND	300
619 kΩ to GND	400
Open	500
866 kΩ to VREG	600
309 kΩ to VREG	750
124 kΩ to VREG	850
0 Ω to VREG	970

The off-time is modulated by a PWM comparator. The VFB node voltage (the mid-point of resistor divider) is compared to the internal 0.6-V reference voltage added with a ramp signal. When the signal values match, the PWM comparator asserts a set signal to terminate the off-time (turn off the low-side MOSFET and turn on high-side MOSFET). The *set* signal is valid if the inductor current level is below the OCP threshold, otherwise the off-time is extended until the current level falls below the threshold.

Figure 6-1 and Figure 6-2 show two on-time control schemes.

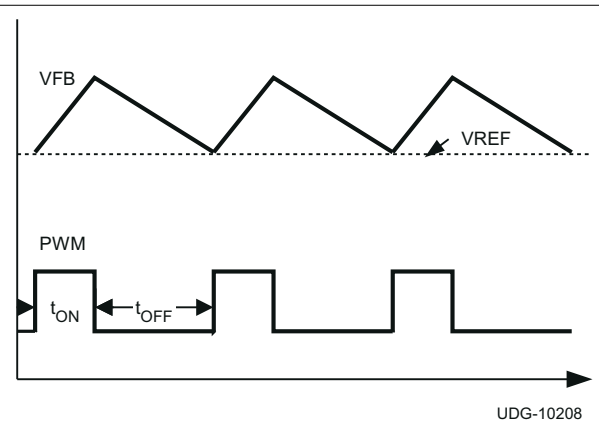

Figure 6-1. On-Time Control Without Ramp Compensation

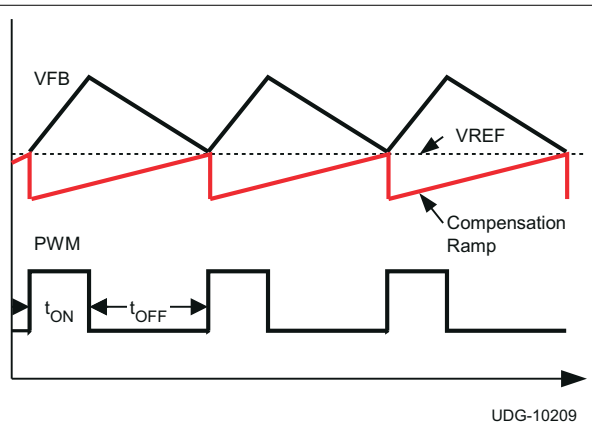

Figure 6-2. On-Time Control With Ramp Compensation

Copyright © 2023 Texas Instruments Incorporated

6.3.2 Small Signal Model

From small-signal loop analysis, a buck converter using D-CAP integrated circuit can be simplified as shown in Figure 6-3.

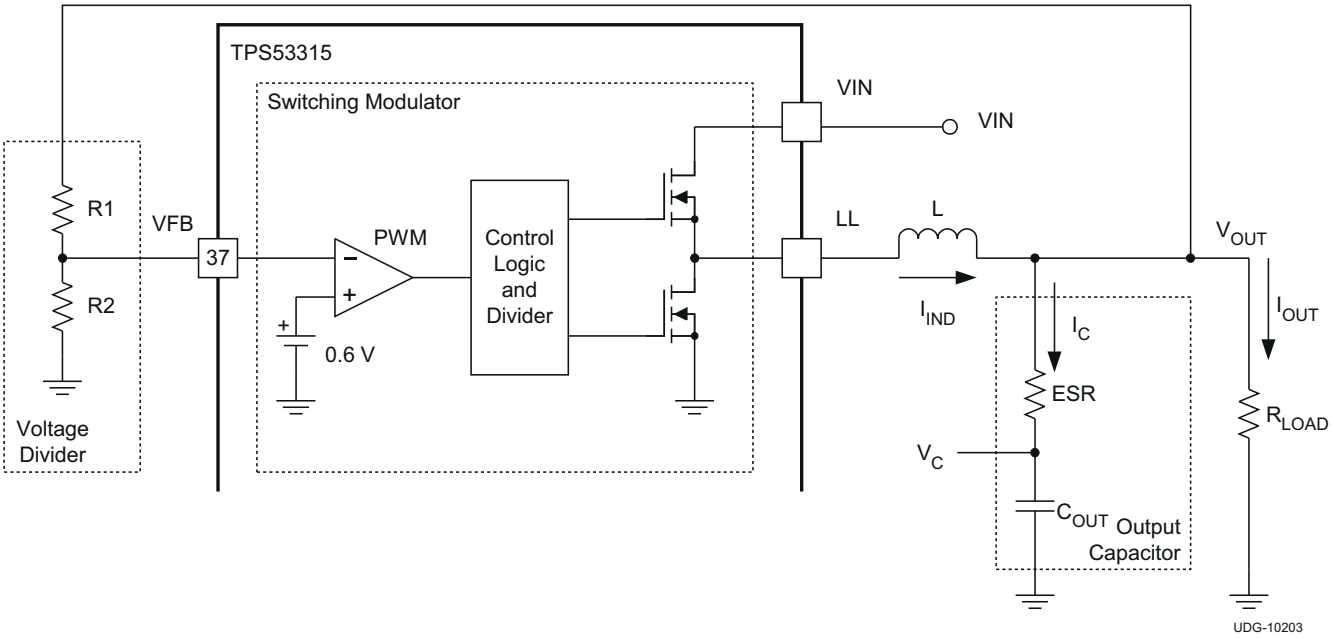

Figure 6-3. Simplified Modulator Model

The output voltage is compared with the internal reference voltage (ramp signal is ignored here for simplicity). The PWM comparator determines the timing to turn on the high-side MOSFET. The gain and speed of the comparator can be assumed high enough to keep the voltage at the beginning of each on-cycle substantially constant.

$$H(s) = \frac{1}{s \times ESR \times C_{OUT}} \tag{1}$$

For the loop stability, the 0 dB frequency, f_0, defined in Equation 2 must be lower than ¼ of the switching frequency.

$$f_0 = \frac{1}{2\pi \times ESR \times C_{OUT}} \leq \frac{f_{SW}}{4} \tag{2}$$

According to Equation 2, the loop stability of D-CAP integrated circuit modulator is mainly determined by the capacitor chemistry. For example, specialty polymer capacitors (SP-CAP) have C_{OUT} on the order of several 100 µF and ESR in range of 10 mΩ. These makes f_0 on the order of 100 kHz or less and the loop is stable. However, ceramic capacitors have an f_0 at more than 700 kHz, and need special care when used with this modulator. An application circuit using ceramic capacitors is described in *Section 7.2.2.3* section.

6.3.3 Ramp Signal

The TPS53315 adds a ramp signal to the 0.6-V reference to improve jitter performance. The feedback voltage is compared with the reference information to keep the output voltage in regulation. By adding a small ramp signal to the reference, the signal-to-noise ratio at the onset of a new switching cycle is improved. Therefore the operation becomes less jittery and more stable. The ramp signal is controlled to start with –7 mV at the beginning of an on-cycle and becomes 0 mV at the end of an off-cycle in steady state.

Copyright © 2023 Texas Instruments Incorporated

6.3.4 Auto-Skip Eco-mode Light Load Operation

While the MODE pin is pulled low through R_{MODE}, the TPS53315 automatically reduces the switching frequency at light-load conditions to maintain high efficiency. Detailed operation is described as follows. As the output current decreases from heavy load condition, the inductor current is also reduced and eventually comes to the point that its rippled valley touches zero level, which is the boundary between continuous conduction and discontinuous conduction modes. The synchronous MOSFET is turned off when this zero inductor current is detected. As the load current further decreases, the converter runs into discontinuous conduction mode (DCM). The on-time is maintained as it was in the continuous conduction mode so that it takes longer time to discharge the output capacitor with smaller load current to the level of the reference voltage. The transition point to the light-load operation $I_{OUT(LL)}$ (that is, the threshold between continuous and discontinuous conduction mode) can be calculated as shown in Equation 3.

$$I_{OUT(LL)} = \frac{1}{2 \times L \times f_{SW}} \times \frac{(V_{IN} - V_{OUT}) \times V_{OUT}}{V_{IN}} \tag{3}$$

where

- f_{SW} is the PWM switching frequency

Switching frequency versus output current in the light load condition is a function of L, V_{IN} and V_{OUT}, but it decreases almost proportionally to the output current from the $I_{OUT(LL)}$ given in Equation 3. For example, it is 60 kHz at $I_{OUT(LL)}/5$ if the frequency setting is 300 kHz.

6.3.5 Adaptive Zero Crossing

The TPS53315 has an adaptive zero crossing circuit which performs optimization of the zero inductor current detection at skip mode operation. This function pursues ideal low-side MOSFET turning off timing and compensates inherent offset voltage of the Z-C comparator and delay time of the Z-C detection circuit. It prevents SW-node swing-up caused by postponed detection and minimizes diode conduction period caused by premature detection. As a result, better light-load efficiency is delivered.

6.3.6 Forced Continuous Conduction Mode

When the MODE pin is tied to PGOOD through a resistor, the controller keeps continuous conduction mode (CCM) during light-load conditions. In this mode, the switching frequency is maintained over the entire load range which is designed for applications needing tight control of the switching frequency at a cost of lower efficiency.

6.3.7 Power Good

The TPS53315 has power-good output that indicates high when switcher output is within the target. The power-good function is activated after soft-start has finished. If the output voltage becomes within +10% or –5% of the target value, internal comparators detect the power-good state and the power-good signal becomes high after a 1-ms internal delay. If the output voltage goes outside of +15% or –10% of the target value, the power-good signal becomes low after two microsecond (2-µs) internal delay. The power-good output is an open drain output and must be pulled up externally.

For the PGOOD logic to be valid, the VDD input must be higher than 1 V. To avoid invalid PGOOD logic before the TPS53315 is powered up, TI recommends the PGOOD be pulled to VREG (either directly or through a resistor divider) because VREG remains low when the device is off.

Copyright © 2023 Texas Instruments Incorporated

6.3.8 Current Sense and Overcurrent Protection

TPS53315 has cycle-by-cycle overcurrent limiting control. The inductor current is monitored during the *OFF* state and the controller maintains the *OFF* state during the period in that the inductor current is larger than the overcurrent trip level. To provide both good accuracy and cost effective solution, TPS53315 supports temperature compensated MOSFET $R_{DS(on)}$ sensing. The TRIP pin must be connected to GND through the trip voltage setting resistor, RT_{RIP}. The TRIP pin sources I_{TRIP} current, which is 10 µA typically at room temperature, and the trip level is set to the OCL trip voltage V_{TRIP} as shown in Equation 4.

$$V_{TRIP}(mV) = R_{TRIP}(k\Omega) \times I_{TRIP}(\mu A) \tag{4}$$

The inductor current is monitored by the voltage between the GND pin and the SW pin so that the SW pin must be connected to the drain terminal of the low-side MOSFET properly. I_{TRIP} has 4700 ppm/°C temperature slope to compensate the temperature dependency of the $R_{DS(on)}$. The GND pin is used as the positive current sensing node. The GND pin must be connected to the proper current sensing device, (for example, the source terminal of the low-side MOSFET.)

As the comparison is done during the *OFF* state, V_{TRIP} sets the valley level of the inductor current. Thus, the load current at the overcurrent threshold, I_{OCP}, can be calculated as shown in Equation 5.

$$I_{OCP} = \frac{V_{TRIP}}{\left(8 \times R_{DS(on)}\right)} + \frac{I_{IND(ripple)}}{2} = \frac{V_{TRIP}}{\left(8 \times R_{DS(on)}\right)} + \frac{1}{2 \times L \times f_{SW}} \times \frac{(V_{IN} - V_{OUT}) \times V_{OUT}}{V_{IN}} \tag{5}$$

In an overcurrent condition, the current to the load exceeds the current to the output capacitor, therefore the output voltage tends to decrease. Eventually, it crosses the undervoltage protection threshold and shuts down. After a hiccup delay (16 ms with 0.7-ms sort-start), the controller restarts. If the overcurrent condition remains, the procedure is repeated and the device enters hiccup mode.

During CCM, the negative current limit (NCL) protects the internal FET from carrying too much current. The NCL detect threshold is set as the same absolute value as positive OCL but negative polarity. Note that the threshold continues to represent the valley value of the inductor current.

6.3.9 Overvoltage and Undervoltage Protection

The TPS53315 monitors a resistor divided feedback voltage to detect overvoltage and undervoltage. When the feedback voltage becomes lower than 70% of the target voltage, the UVP comparator output goes high and an internal UVP delay counter begins counting. After 1 ms, TPS53315 latches OFF both high-side and low-side MOSFETs drivers. The controller restarts after a hiccup delay (16 ms with 0.7-ms soft-start). This function is enabled 1.5 ms after the soft-start is completed.

When the feedback voltage becomes higher than 120% of the target voltage, the OVP comparator output goes high and the circuit latches OFF the high-side MOSFET driver and latches ON the low-side MOSFET driver. The output voltage decreases. If the output voltage reaches the UV threshold, then both high-side MOSFET and low-side MOSFET driver is OFF and the device restarts after a hiccup delay. If the OV condition remains, both high-side MOSFET and low-side MOSFET driver remains OFF until the OV condition is removed.

6.3.10 UVLO Protection

The TPS53315 uses VREG undervoltage lockout protection (UVLO). When the VREG voltage is lower than the UVLO threshold voltage, the switch mode power supply shuts off. This is a non-latch protection.

6.3.11 Thermal Shutdown

TPS53315 includes a temperature monitoring feature. If the temperature exceeds the threshold value (typically 145°C), TPS53315 shuts off. When the temperature falls approximately 10°C below the threshold value, the device turns on again. This is a non-latch protection.

Copyright © 2023 Texas Instruments Incorporated

6.4 Device Functional Modes

6.4.1 Enable and Soft Start

When the EN pin voltage rises above the enable threshold voltage (typically 1.2 V), the controller enters the start-up sequence. The internal LDO regulator starts immediately and regulates to 5 V at the VREG pin. The controller then uses the first 250 µs to calibrate the switching frequency setting resistance attached to the RF pin and stores the switching frequency code in internal registers. However, switching is inhibited during this phase. In the second phase, an internal DAC starts ramping up the reference voltage from 0 V to 0.6 V. Depending on the MODE pin setting, the ramping up time varies from 0.7 ms to 5.6 ms. Smooth and constant ramp-up of the output voltage is maintained during start-up regardless of load current.

Table 6-2. Soft-Start and MODE

MODE SELECTION	ACTION	SOFT-START TIME (ms)	R_{MODE} (kΩ)
Auto Skip	Pull down to GND	0.7	39
		1.4	100
		2.8	200
		5.6	475
Forced CCM[(1)]	Connect to PGOOD	0.7	39
		1.4	100
		2.8	200
		5.6	475

(1) The device transitions into FCCM after the PGOOD pin goes high.

Copyright © 2023 Texas Instruments Incorporated

7 Application and Implementation

Note

Information in the following applications sections is not part of the TI component specification, and TI does not warrant its accuracy or completeness. TI's customers are responsible for determining suitability of components for their purposes, as well as validating and testing their design implementation to confirm system functionality.

7.1 Application Information

The TPS53315 is a high-efficiency, single channel, synchronous buck converter designed for low output voltage point-of-load applications in computing and similar digital consumer applications. The device features proprietary D-CAP integrated circuit combined with an adaptive on-time architecture. This combination is designed for building modern low duty ratio, ultra-fast load step response DC-DC converters. The output voltage ranges from 0.6 V to 5.5 V. The conversion input voltage range is from 3 V up to 15 V. The D-CAP integrated circuit uses the ESR of the output capacitors to sense the device current. One advantage of this control scheme is that the control scheme does not require an external phase compensation network. This allows a simple design with a low external component count. Eight preset switching frequency values can be chosen using a resistor connected from the RF pin to ground or the VREG pin. Adaptive on-time control tracks the preset switching frequency over a wide input and output voltage range while allowing the switching frequency to increase at the step-up of the load.

7.2 Typical Application

7.2.1 Typical Application Circuit Diagram

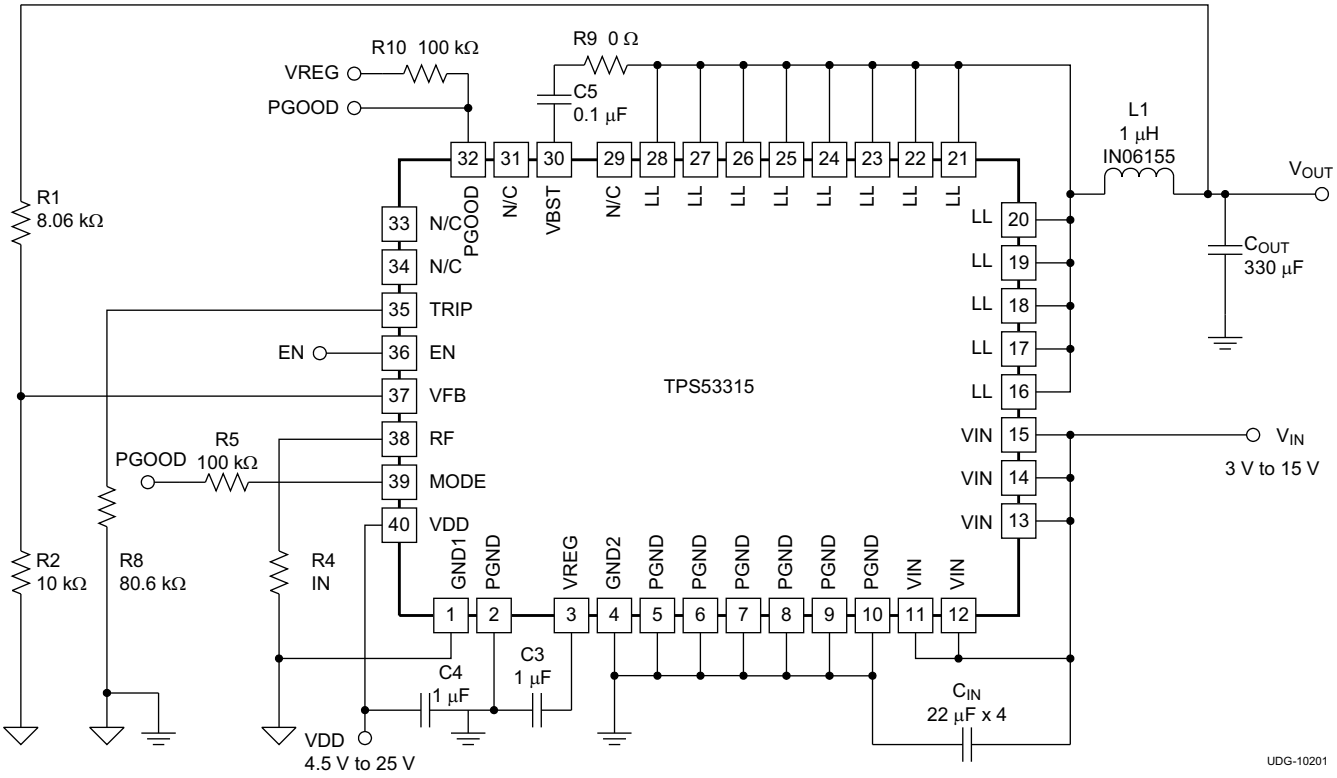

Figure 7-1. Typical Application Circuit Diagram

7.2.1.1 Design Requirements

Table 7-1 lists the design requirements for the typical application.

Table 7-1. Design Parameters

PARAMETER		TEST CONDITIONS	MIN	TYP	MAX	UNIT
INPUT CHARACTERISTICS						
V_{IN}	Voltage range		8	12	14	V
I_{MAX}	Maximum Input current	V_{IN} = 8 V, I_{OUT} = 12 A		1.4		A
	No load input current	V_{IN} = 14 V, I_{OUT} = 0 A with auto-skip mode		1		mA
OUTPUT CHARACTERISTICS						
V_{OUT}	Output voltage			1.5		V
	Output voltage regulation	Line regulation, 8 V ≤ V_{IN} ≤ 15 V		0.1%		
		Load regulation, V_{IN} = 12 V, 0 A ≤ I_{OUT} ≤ 12 A with FCCM		0.2%		
V_{RIPPLE}	Output voltage ripple	V_{IN} = 12 V, I_{OUT} = 12 A with FCCM		20		mV_{PP}
I_{LOAD}	Output load current		0		12	A
I_{OCP}	Output overcurrent threshold			15		A
t_{SS}	Soft-start time			1.4		ms
SYSTEMS CHARACTERISTICS						
f_{SW}	Switching frequency			500		kHz
η	Peak efficiency	V_{IN} = 12 V, V_{OUT} = 1.1 V, I_{OUT} = 6 A		85.07%		
	Full load efficiency	V_{IN} = 12 V, V_{OUT} = 1.1 V, I_{OUT} = 12 A		80.23%		
T_A	Operating temperature			25		°C

7.2.1.2 Detailed Design Procedure

Refer to the *Section 7.2.2.3* section for guidelines for this design with all ceramic output capacitors.

The external components selection is a simple process when using organic semiconductors or special polymer output capacitors.

7.2.1.2.1 Step 1: Select Operation Mode and Soft-Start Time

Select operation mode and soft-start time using Table 6-2.

7.2.1.2.2 Step 2: Select Switching Frequency

Select the switching frequency from 250 kHz to 1 MHz using Table 6-1.

7.2.1.2.3 Step 3: Select the Inductance

The inductance value must be determined to give the ripple current of approximately 1/4 to 1/2 of maximum output current. Larger ripple current increases output ripple voltage and improves signal-to-noise ratio and helps make sure of stable operation, but increases inductor core loss. Using 1/3 ripple current to maximum output current ratio, the inductance can be determined by Equation 6.

The inductor requires a low DCR to achieve good efficiency. It also requires enough room above peak inductor current before saturation. The peak inductor current can be estimated in Equation 7.

$$L = \frac{1}{I_{IND(ripple)} \times f_{SW}} \times \frac{\left(V_{IN(max)} - V_{OUT}\right) \times V_{OUT}}{V_{IN(max)}} = \frac{3}{I_{OUT(max)} \times f_{SW}} \times \frac{\left(V_{IN(max)} - V_{OUT}\right) \times V_{OUT}}{V_{IN(max)}} \quad (6)$$

Copyright © 2023 Texas Instruments Incorporated

$$I_{IND(peak)} = \frac{V_{TRIP}}{8 \times R_{DS(on)}} + \frac{1}{L \times f_{SW}} \times \frac{\left(V_{IN(max)} - V_{OUT}\right) \times V_{OUT}}{V_{IN(max)}} \tag{7}$$

7.2.1.2.4 Step 4: Select Output Capacitors

When organic semiconductor capacitors or specialty polymer capacitors are used, for loop stability, capacitance and ESR must satisfy Equation 2. For jitter performance, Equation 8 is a good starting point to determine ESR.

$$ESR = \frac{V_{OUT} \times 10\,mV \times (1 - D)}{0.6\,V \times I_{IND(ripple)}} = \frac{10\,mV \times L \times f_{SW}}{0.6\,V} = \frac{L \times f_{SW}}{60}\,(\Omega) \tag{8}$$

where

- D is the duty factor
- the required output ripple slope is approximately 10 mV per t_{SW} (switching period) in terms of VFB terminal voltage

7.2.1.2.5 Step 5: Determine the Voltage-Divider Resistance (R1 and R2)

The output voltage is programmed by the voltage-divider resistor, R1 and R2 shown in the *Section 6.3.2* section. R1 is connected between VFB pin and the output, and R2 is connected between the VFB pin and GND. The recommended R2 value is between 1 kΩ and 20 kΩ. Determine R1 using Figure 6-3.

$$R1 = \frac{V_{OUT} - \frac{I_{IND(ripple)} \times ESR}{2} - 0.6}{0.6} \times R2 \tag{9}$$

7.2.1.2.6 Step 6: Select the Overcurrent Resistance (R_{TRIP})

The overcurrent setting resistor, R_{TRIP}, can be determined by Equation 10.

$$R_{TRIP}(k\Omega) = \frac{\left(I_{OCP} - \left(\frac{1}{2 \times L \times f_{SW}}\right) \times \frac{(V_{IN} - V_{OUT}) \times V_{OUT}}{V_{IN}}\right) \times 8 \times R_{DS(on)}\,(m\Omega)}{I_{TRIP}(\mu A)} \tag{10}$$

where

- I_{TRIP} is the TRIP pin sourcing current (10 µA)
- $R_{DS(on)}$ is the thermally compensated on-time resistance value of the low-side MOSFET which is 7 mΩ

7.2.1.3 Application Curves

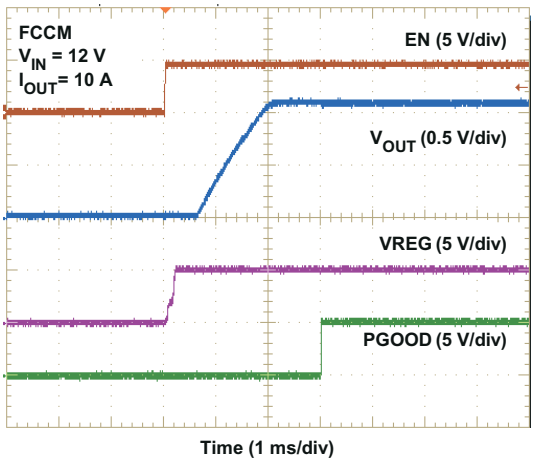

Figure 7-2. Start-Up

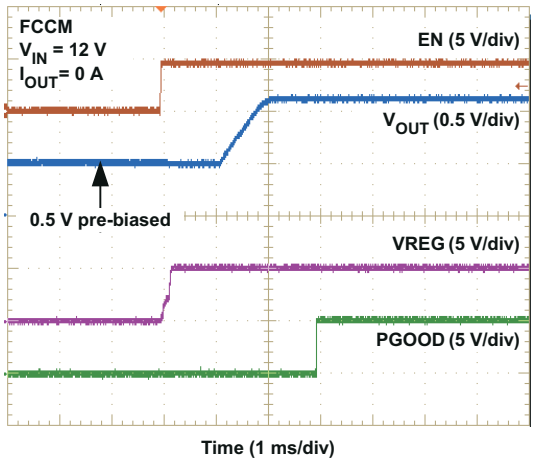

Figure 7-3. Prebias Start-Up

7.2.2 Typical Application Circuit Diagram With Ceramic Output Capacitors

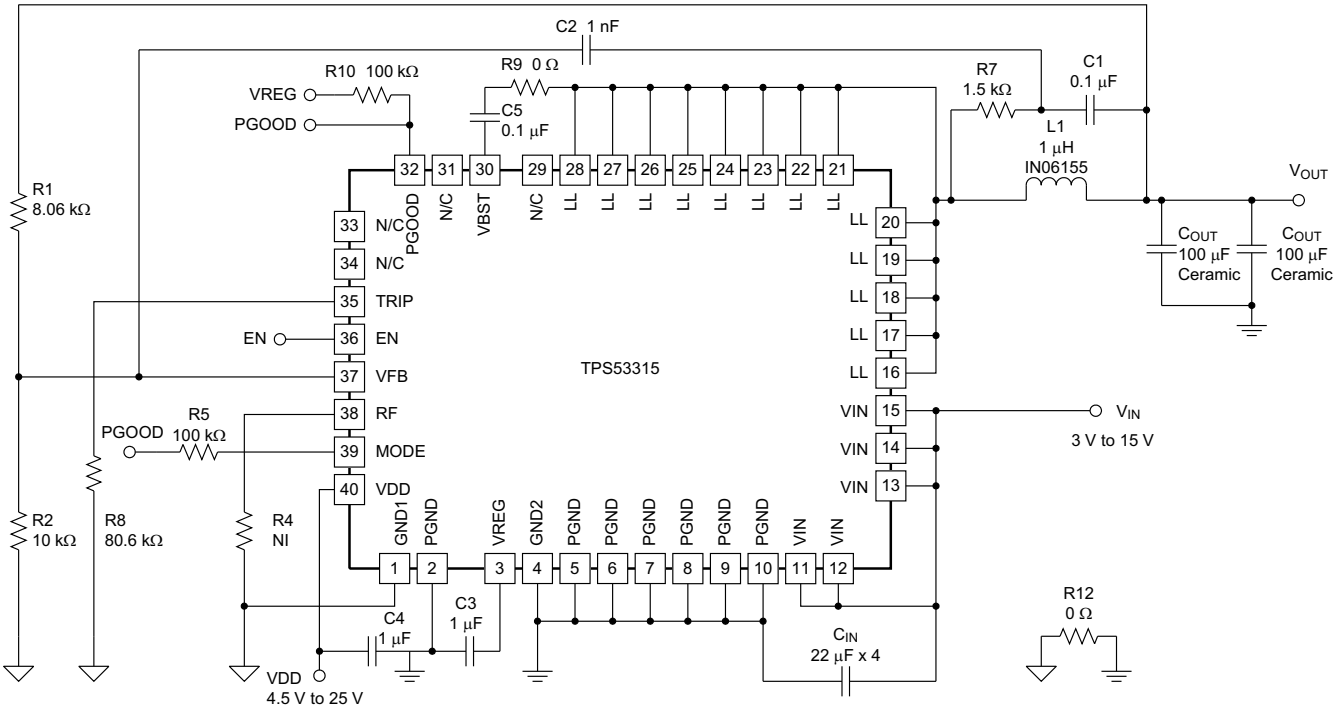

Figure 7-4. Typical Application Circuit Diagram with Ceramic Output Capacitors

Copyright © 2023 Texas Instruments Incorporated

7.2.2.1 Design Requirements

Table 7-2 lists the design requirements for the typical application with ceramic output capacitors.

Table 7-2. Design Parameters

PARAMETER		TEST CONDITIONS	MIN	TYP	MAX	UNIT
INPUT CHARACTERISTICS						
V_{IN}	Voltage range		8	12	14	V
I_{MAX}	Maximum Input current	V_{IN} = 8 V, I_{OUT} = 12 A		1.4		A
	No load input current	V_{IN} = 14 V, I_{OUT} = 0 A with auto-skip mode		1		mA
OUTPUT CHARACTERISTICS						
V_{OUT}	Output voltage			1.5		V
	Output voltage regulation	Line regulation, 8 V ≤ V_{IN} ≤ 15 V		0.1%		
		Load regulation, V_{IN} = 12 V, 0 A ≤ I_{OUT} ≤ 12 A with FCCM		0.2%		
V_{RIPPLE}	Output voltage ripple	V_{IN} = 12 V, I_{OUT} = 12 A with FCCM		20		mV_{PP}
I_{LOAD}	Output load current		0		12	A
I_{OCP}	Output overcurrent threshold			15		A
t_{SS}	Soft-start time			1.4		ms
SYSTEMS CHARACTERISTICS						
f_{SW}	Switching frequency			500		kHz
η	Peak efficiency	V_{IN} = 12 V, V_{OUT} = 1.1 V, I_{OUT} = 6 A		85.07%		
	Full load efficiency	V_{IN} = 12 V, V_{OUT} = 1.1 V, I_{OUT} = 12 A		80.23%		
T_A	Operating temperature			25		°C

7.2.2.2 Detailed Design Procedure

Refer to the *Section 7.2.2.3* section for guidelines for this design with all ceramic output capacitors.

The external components selection is a simple process when using organic semiconductors or special polymer output capacitors.

7.2.2.2.1 Step 1: Select Operation Mode and Soft-Start Time

Select operation mode and soft-start time using Table 6-2.

7.2.2.2.2 Step 2: Select Switching Frequency

Select the switching frequency from 250 kHz to 1 MHz using Table 6-1.

7.2.2.2.3 Step 3: Select the Inductance

The inductance value must be determined to give the ripple current of approximately 1/4 to 1/2 of maximum output current. Larger ripple current increases output ripple voltage and improves signal-to-noise ratio and helps make sure of stable operation, but increases inductor core loss. Using 1/3 ripple current to maximum output current ratio, the inductance can be determined by Equation 6.

The inductor requires a low DCR to achieve good efficiency. It also requires enough room above peak inductor current before saturation. The peak inductor current can be estimated in Equation 7.

$$L = \frac{1}{I_{IND(ripple)} \times f_{SW}} \times \frac{\left(V_{IN(max)} - V_{OUT}\right) \times V_{OUT}}{V_{IN(max)}} = \frac{3}{I_{OUT(max)} \times f_{SW}} \times \frac{\left(V_{IN(max)} - V_{OUT}\right) \times V_{OUT}}{V_{IN(max)}} \quad (11)$$

$$I_{IND(peak)} = \frac{V_{TRIP}}{8 \times R_{DS(on)}} + \frac{1}{L \times f_{SW}} \times \frac{\left(V_{IN(max)} - V_{OUT}\right) \times V_{OUT}}{V_{IN(max)}} \tag{12}$$

7.2.2.2.4 Step 4: Select Output Capacitance for Ceramic Capacitors

Refer to the *Section 7.2.2.3* section to select external components because ceramic output capacitors are used in this design.

7.2.2.2.5 Step 5: Select the Overcurrent Setting Resistance (R_{TRIP})

$$R_{TRIP}(k\Omega) = \frac{\left(I_{OCP} - \left(\frac{1}{2 \times L \times f_{SW}}\right) \times \frac{(V_{IN} - V_{OUT}) \times V_{OUT}}{V_{IN}}\right) \times 8 \times R_{DS(on)}(m\Omega)}{I_{TRIP}(\mu A)} \tag{13}$$

where

- I_{TRIP} is the TRIP pin sourcing current (10 µA)
- $R_{DS(on)}$ is the thermally compensated on-time resistance value of the low-side MOSFET which is 7 mΩ

7.2.2.3 External Component Selection When Using All Ceramic Output Capacitors

When a ceramic output capacitor is used, the stability criteria in Equation 2 cannot be satisfied. The ripple injection approach as shown in Figure 7-4 is implemented to increase the ripple on the VFB pin and make the system stable. In addition to the selections made using *Section 7.2.2.2.1* through *Section 7.2.2.2.5*, use the information in the *Section 7.2.2.3* section to select the ripple injection components. The C2 value can be fixed at 1 nF. Select a value for C1 between 10 nF and 200 nF.

$$\frac{L \times C_{OUT}}{R7 \times C1} > N \times \frac{t_{ON}}{2} \tag{14}$$

where

- N is the coefficient to account for L and C_{OUT} variation.

N is also used to provide enough margin for stability. TI recommends N = 2 for V_{OUT} ≤ 1.8 V and N = 4 for V_{OUT} ≥ 3.3 V or when L ≤ 250 nH. The higher V_{OUT} needs a higher N value because the effective output capacitance is reduced significantly with higher DC bias. For example, a 6.3-V, 22-µF ceramic capacitor can have only 8 µF of effective capacitance when biased at 5 V.

Because the VFB pin voltage is regulated at the valley, the increased ripple on the VFB pin causes the increase of the VFB DC value. The AC ripple coupled to the VFB pin has two components, one coupled from SW node and the other coupled from the VOUT pin and they can be calculated using Equation 15 and Equation 16 when neglecting the output voltage ripple caused by equivalent series inductance (ESL).

$$V_{INJ_SW} = \frac{V_{IN} - V_{OUT}}{R7 \times C1} \times \frac{D}{f_{SW}} \tag{15}$$

$$V_{INJ_OUT} = ESR \times I_{IND(ripple)} + \frac{I_{IND(ripple)}}{8 \times C_{OUT} \times f_{SW}} \tag{16}$$

TI recommends that V_{INJ_SW} to be less than 50 mV. If the calculated V_{INJ_SW} is higher than 50 mV, then other parameters must be adjusted to reduce it. For example, C_{OUT} can be increased to satisfy Equation 14 with a higher R7 value, thereby reducing V_{INJ_SW}.

The DC voltage at the VFB pin can be calculated by Equation 17:

Copyright © 2023 Texas Instruments Incorporated

$$V_{VFB} = 0.6 + \frac{V_{INJ_SW} + V_{INJ_OUT}}{2} \tag{17}$$

And the resistor divider value can be determined by Equation 18:

$$R1 = \frac{V_{OUT} - V_{VFB}}{V_{VFB}} \times R2 \tag{18}$$

7.2.2.4 Application Curves

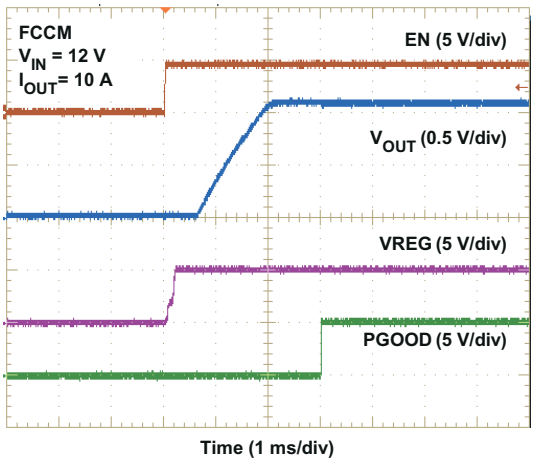

Figure 7-5. Start-Up

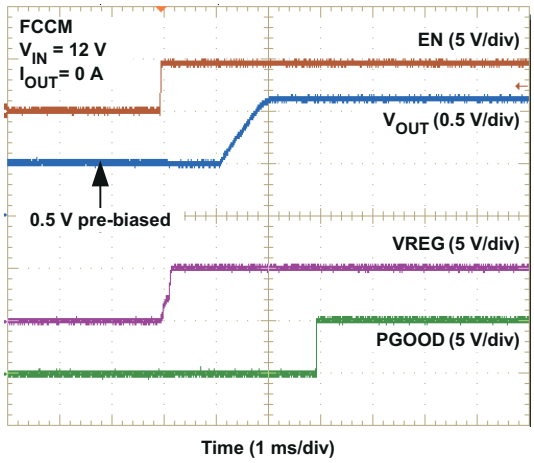

Figure 7-6. Prebias Start-Up

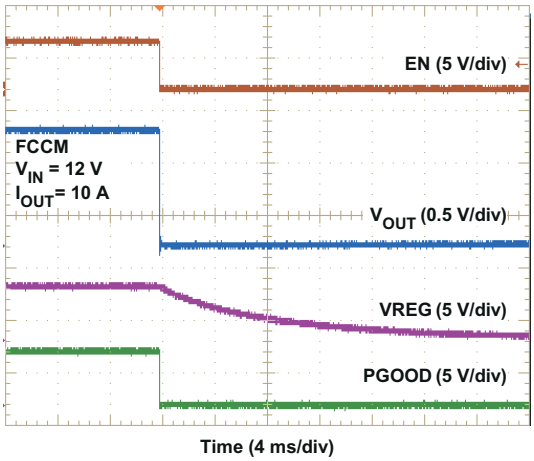

Figure 7-7. Turn-Off

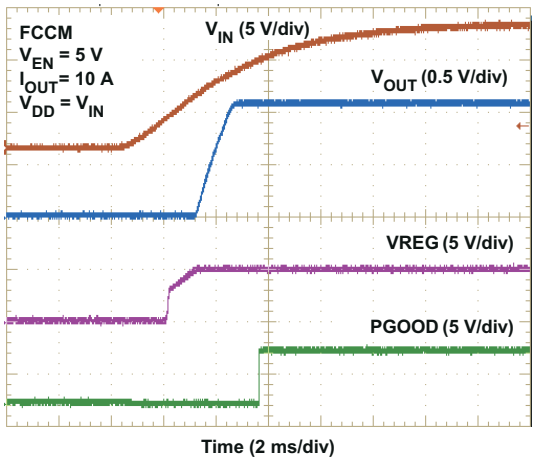

Figure 7-8. UVLO Start-Up

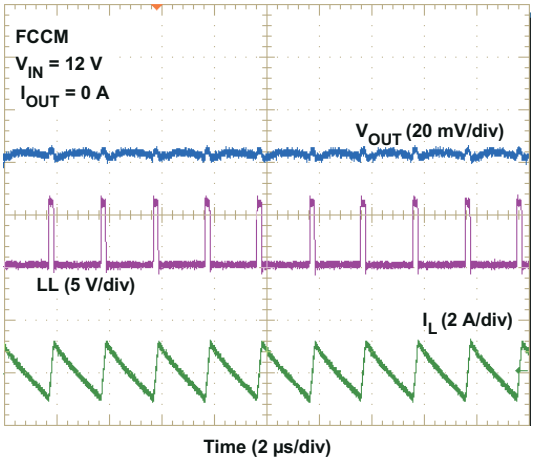

Figure 7-9. 1.1-V Output FCCM Steady-State Operation

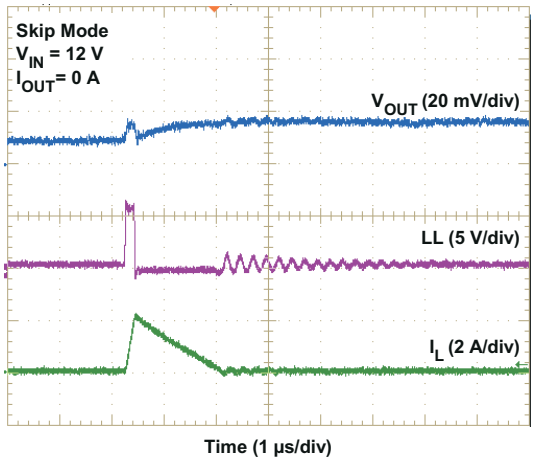

Figure 7-10. 1.1-V Output Skip Mode Steady-State Operation

Copyright © 2023 Texas Instruments Incorporated

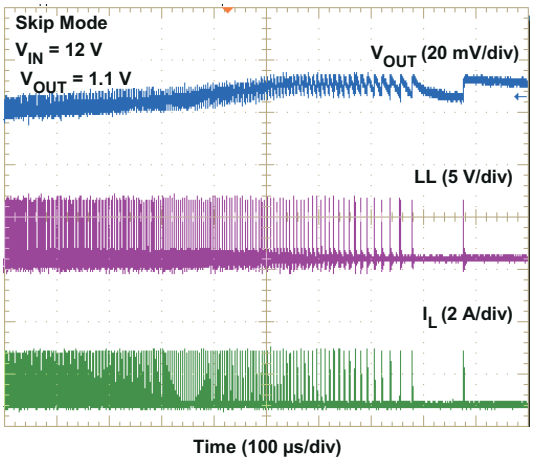

Figure 7-11. CCM to DCM Transition

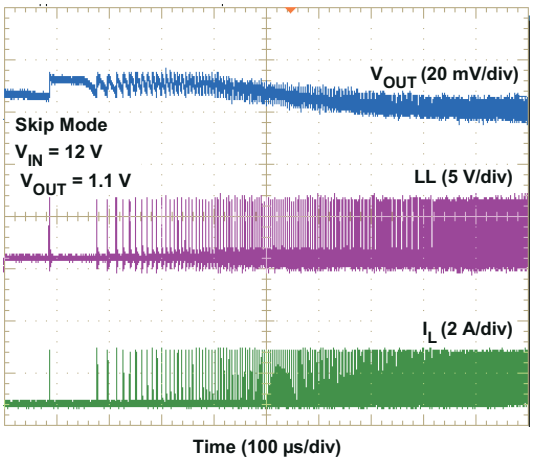

Figure 7-12. DCM to CCM Transition

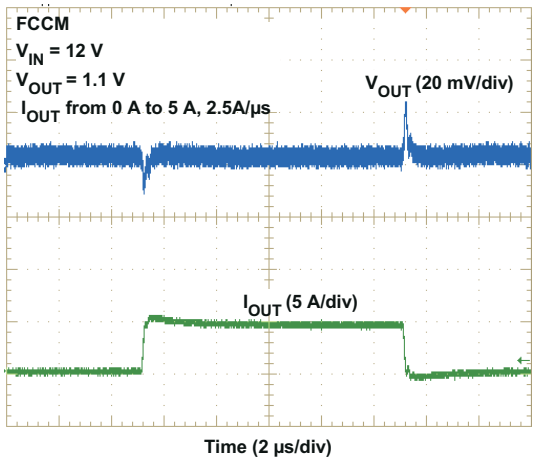

Figure 7-13. FCCM Load Transient

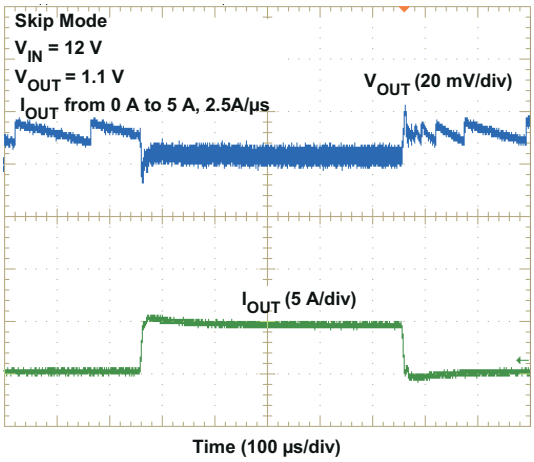

Figure 7-14. Skip Mode Load Transient

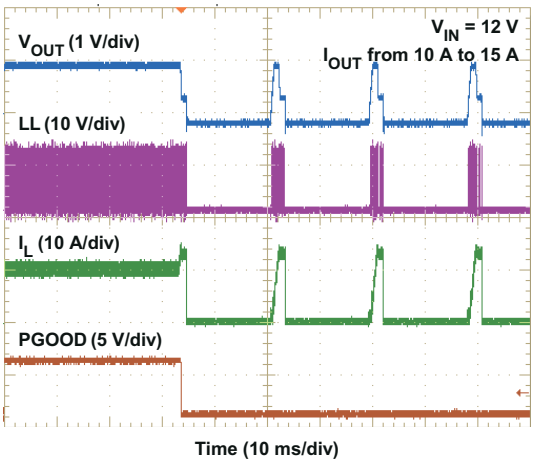

Figure 7-15. Overcurrent Protection

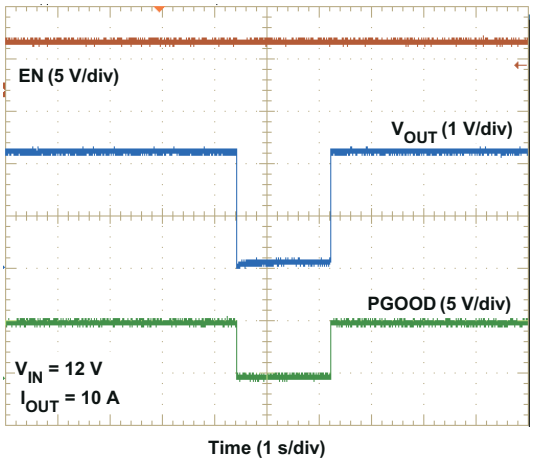

Figure 7-16. Overtemperature Protection

7.3 Power Supply Recommendations

The device is designed to operate from an input voltage supply range between 3 V and 15 V (4.5-V to 25-V biased). This input supply must be well regulated. Proper bypassing of input supplies and internal regulators is

also critical for noise performance, as is PCB layout and grounding scheme. See the recommendations in the *Section 7.4* section.

7.4 Layout

7.4.1 Layout Guidelines

Certain points must be considered before starting a layout work using the TPS53315.

- Place the power components (including input, output capacitors, inductor and TPS53315) on one side of the PCB (solder side). Place other small signal components on another side (component side). At least one inner plane must be inserted, connected to ground, to shield and isolate the small signal traces from noisy power lines.
- Place all sensitive analog traces and components such as VFB, PGOOD, TRIP, MODE and RF away from high-voltage switching nodes such as LL, VBST to avoid coupling. Use internal layers as ground planes and shield feedback trace from power traces and components.
- Place the VIN decoupling capacitors as close to the VIN and PGND pins as possible to minimize the input AC current loop.
- Connect the top-side resistor of the voltage divider to the positive node of VOUT capacitor because the TPS53315 controls output voltage referring to voltage across the V_{OUT} capacitor. In a same manner both bottom side resistor and GND pad of the device must be connected to the negative node of V_{OUT} capacitor. The trace from these resistors to the VFB pin must be short and thin. Place on the component side and avoid vias between these resistors and the device.
- Connect the overcurrent setting resistors from TRIP pin to ground and make the connections as close as possible to the device. The trace from TRIP pin to resistor and from resistor to ground must avoid coupling to a high-voltage switching node.
- Connect the frequency setting resistor from RF pin to ground, or to the VREG pin, and make the connections as close as possible to the device. The trace from the RF pin to the resistor and from the resistor to ground must avoid coupling to a high-voltage switching node.
- Connect the MODE setting resistor from MODE pin to ground, or to the PGOOD pin, and make the connections as close as possible to the device. The trace from the MODE pin to the resistor and from the resistor to ground must avoid coupling to a high-voltage switching node.
- Make the PCB trace defined as switch node, which connects the LL pins and high-voltage side of the inductor, as short and wide as possible.

Copyright © 2023 Texas Instruments Incorporated

7.4.2 Layout Example

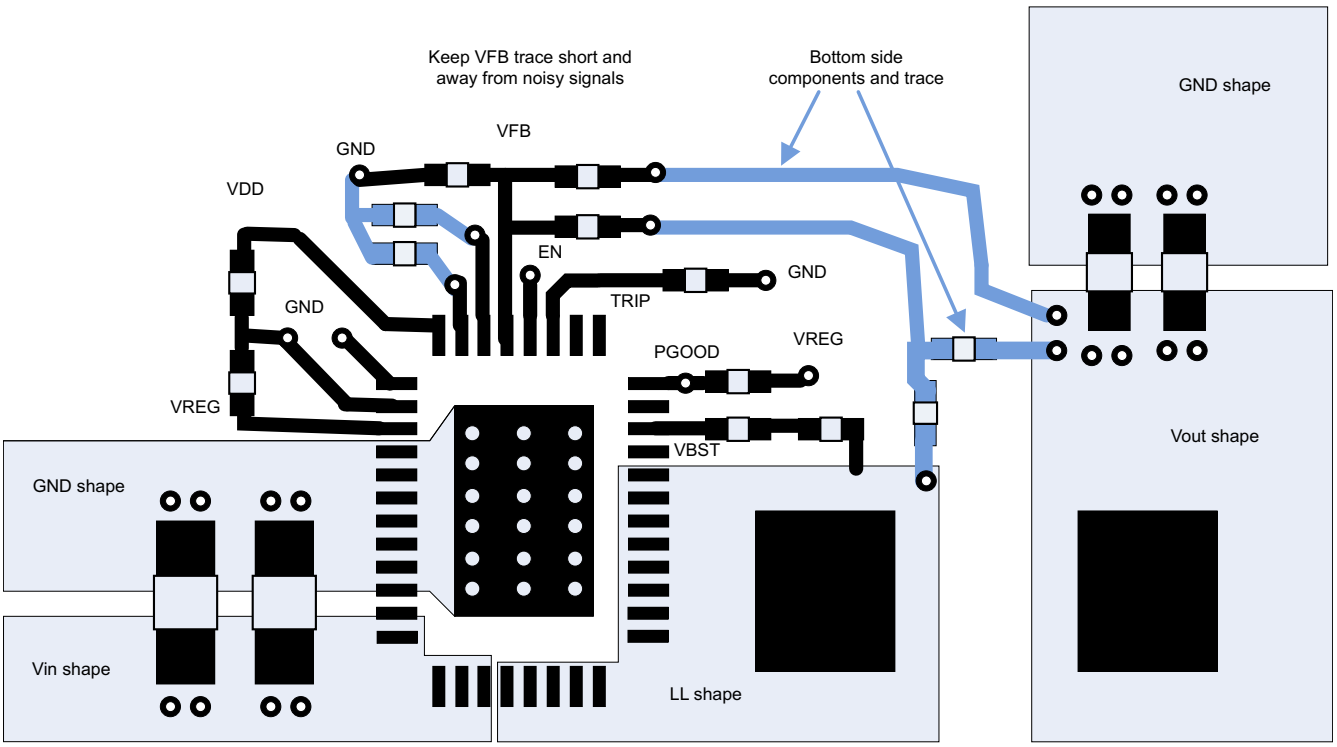

Figure 7-17. Layout Recommendation

7.4.2.1 Thermal Considerations

Figure 7-18 shows the thermal signature of the TPS53315 EVM at a switching frequency of 500 kHz. Figure 7-19 shows the thermal signature of the TPS53315 EVM at a switching frequency of 650 kHz

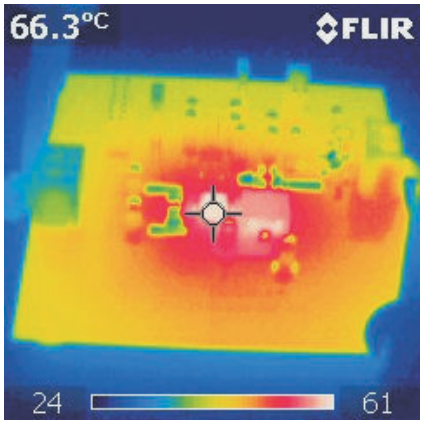

V_{IN} = 12 V
f_{SW} = 500 kHz
I_{OUT}= 12 A
V_{OUT} = 1.1 V
T_A = 25°C with no airflow

Figure 7-18. Thermal Signature of TPS53315 EVM

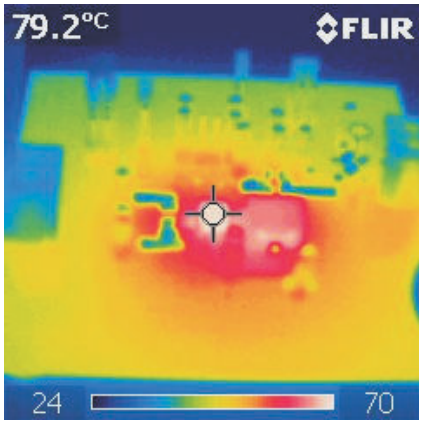

V_{IN} = 12 V
f_{SW} = 650 kHz
I_{OUT}= 12 A
V_{OUT} = 3.3 V
T_A = 25°C with no airflow

Figure 7-19. Thermal Signature of TPS53315 EVM

8 Device and Documentation Support

8.1 Receiving Notification of Documentation Updates

To receive notification of documentation updates, navigate to the device product folder on ti.com. Click on *Notifications* to register and receive a weekly digest of any product information that has changed. For change details, review the revision history included in any revised document.

8.2 Support Resources

TI E2E™ support forums are an engineer's go-to source for fast, verified answers and design help — straight from the experts. Search existing answers or ask your own question to get the quick design help you need.

Linked content is provided "AS IS" by the respective contributors. They do not constitute TI specifications and do not necessarily reflect TI's views; see TI's Terms of Use.

8.3 Trademarks

TI E2E™ is a trademark of Texas Instruments.
All trademarks are the property of their respective owners.

8.4 Electrostatic Discharge Caution

This integrated circuit can be damaged by ESD. Texas Instruments recommends that all integrated circuits be handled with appropriate precautions. Failure to observe proper handling and installation procedures can cause damage.

ESD damage can range from subtle performance degradation to complete device failure. Precision integrated circuits may be more susceptible to damage because very small parametric changes could cause the device not to meet its published specifications.

8.5 Glossary

TI Glossary	This glossary lists and explains terms, acronyms, and definitions.

9 Revision History

NOTE: Page numbers for previous revisions may differ from page numbers in the current version.

Changes from Revision A (December 2015) to Revision B (November 2023)	Page
• Updated the numbering format for tables, figures, and cross-references throughout the document	1
• Updated trademark information	1
• Updated the *Package Information* table	1
• Added resistor between V_{OUT} and VFB in the simplified application diagram	1

Changes from Revision * (May 2013) to Revision A (December 2015)	Page
• Added *ESD Ratings* table, *Feature Description* section, *Device Functional Modes*, *Application and Implementation* section, *Power Supply Recommendations* section, *Layout* section, *Device and Documentation Support* section, and *Mechanical, Packaging, and Orderable Information* section	1

10 Mechanical, Packaging, and Orderable Information

The following pages include mechanical, packaging, and orderable information. This information is the most current data available for the designated devices. This data is subject to change without notice and revision of this document. For browser-based versions of this data sheet, refer to the left-hand navigation.

Copyright © 2023 Texas Instruments Incorporated

PACKAGING INFORMATION

Orderable part number	Status (1)	Material type (2)	Package | Pins	Package qty | Carrier	RoHS (3)	Lead finish/ Ball material (4)	MSL rating/ Peak reflow (5)	Op temp (°C)	Part marking (6)
TPS53315RGFR	Active	Production	VQFN (RGF) | 40	3000 | LARGE T&R	Yes	NIPDAU	Level-2-260C-1 YEAR	-40 to 85	TPS 53315
TPS53315RGFR.A	Active	Production	VQFN (RGF) | 40	3000 | LARGE T&R	Yes	NIPDAU	Level-2-260C-1 YEAR	-40 to 85	TPS 53315
TPS53315RGFR.B	Active	Production	VQFN (RGF) | 40	3000 | LARGE T&R	Yes	NIPDAU	Level-2-260C-1 YEAR	-40 to 85	TPS 53315
TPS53315RGFT	Active	Production	VQFN (RGF) | 40	250 | SMALL T&R	Yes	NIPDAU	Level-2-260C-1 YEAR	-40 to 85	TPS 53315
TPS53315RGFT.A	Active	Production	VQFN (RGF) | 40	250 | SMALL T&R	Yes	NIPDAU	Level-2-260C-1 YEAR	-40 to 85	TPS 53315
TPS53315RGFT.B	Active	Production	VQFN (RGF) | 40	250 | SMALL T&R	Yes	NIPDAU	Level-2-260C-1 YEAR	-40 to 85	TPS 53315
TPS53315RGFTG4	Active	Production	VQFN (RGF) | 40	250 | SMALL T&R	Yes	NIPDAU	Level-2-260C-1 YEAR	-40 to 85	TPS 53315
TPS53315RGFTG4.A	Active	Production	VQFN (RGF) | 40	250 | SMALL T&R	Yes	NIPDAU	Level-2-260C-1 YEAR	-40 to 85	TPS 53315
TPS53315RGFTG4.B	Active	Production	VQFN (RGF) | 40	250 | SMALL T&R	Yes	NIPDAU	Level-2-260C-1 YEAR	-40 to 85	TPS 53315

(1) **Status:** For more details on status, see our product life cycle.

(2) **Material type:** When designated, preproduction parts are prototypes/experimental devices, and are not yet approved or released for full production. Testing and final process, including without limitation quality assurance, reliability performance testing, and/or process qualification, may not yet be complete, and this item is subject to further changes or possible discontinuation. If available for ordering, purchases will be subject to an additional waiver at checkout, and are intended for early internal evaluation purposes only. These items are sold without warranties of any kind.

(3) **RoHS values:** Yes, No, RoHS Exempt. See the TI RoHS Statement for additional information and value definition.

(4) **Lead finish/Ball material:** Parts may have multiple material finish options. Finish options are separated by a vertical ruled line. Lead finish/Ball material values may wrap to two lines if the finish value exceeds the maximum column width.

(5) **MSL rating/Peak reflow:** The moisture sensitivity level ratings and peak solder (reflow) temperatures. In the event that a part has multiple moisture sensitivity ratings, only the lowest level per JEDEC standards is shown. Refer to the shipping label for the actual reflow temperature that will be used to mount the part to the printed circuit board.

(6) **Part marking:** There may be an additional marking, which relates to the logo, the lot trace code information, or the environmental category of the part.

Multiple part markings will be inside parentheses. Only one part marking contained in parentheses and separated by a "~" will appear on a part. If a line is indented then it is a continuation of the previous line and the two combined represent the entire part marking for that device.

Important Information and Disclaimer: The information provided on this page represents TI's knowledge and belief as of the date that it is provided. TI bases its knowledge and belief on information provided by third parties, and makes no representation or warranty as to the accuracy of such information. Efforts are underway to better integrate information from third parties. TI has taken and continues to take reasonable steps to provide representative and accurate information but may not have conducted destructive testing or chemical analysis on incoming materials and chemicals. TI and TI suppliers consider certain information to be proprietary, and thus CAS numbers and other limited information may not be available for release.

In no event shall TI's liability arising out of such information exceed the total purchase price of the TI part(s) at issue in this document sold by TI to Customer on an annual basis.

TAPE AND REEL INFORMATION

REEL DIMENSIONS

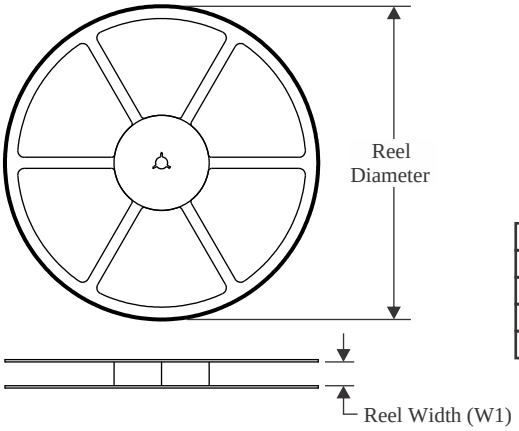

TAPE DIMENSIONS

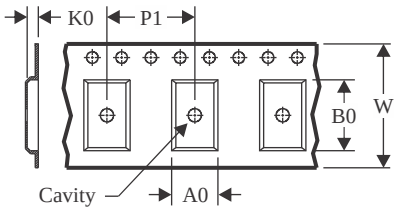

A0	Dimension designed to accommodate the component width
B0	Dimension designed to accommodate the component length
K0	Dimension designed to accommodate the component thickness
W	Overall width of the carrier tape
P1	Pitch between successive cavity centers

QUADRANT ASSIGNMENTS FOR PIN 1 ORIENTATION IN TAPE

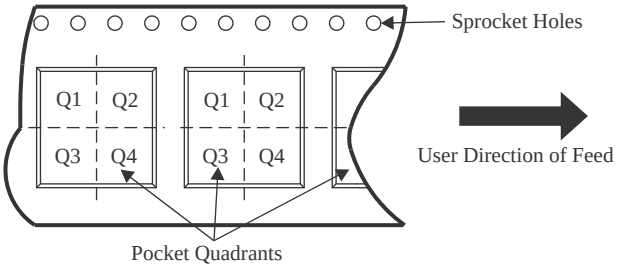

*All dimensions are nominal

Device	Package Type	Package Drawing	Pins	SPQ	Reel Diameter (mm)	Reel Width W1 (mm)	A0 (mm)	B0 (mm)	K0 (mm)	P1 (mm)	W (mm)	Pin1 Quadrant
TPS53315RGFR	VQFN	RGF	40	3000	330.0	16.4	5.25	7.25	1.45	8.0	16.0	Q1
TPS53315RGFT	VQFN	RGF	40	250	180.0	16.4	5.25	7.25	1.45	8.0	16.0	Q1
TPS53315RGFTG4	VQFN	RGF	40	250	180.0	16.4	5.25	7.25	1.45	8.0	16.0	Q1

TAPE AND REEL BOX DIMENSIONS

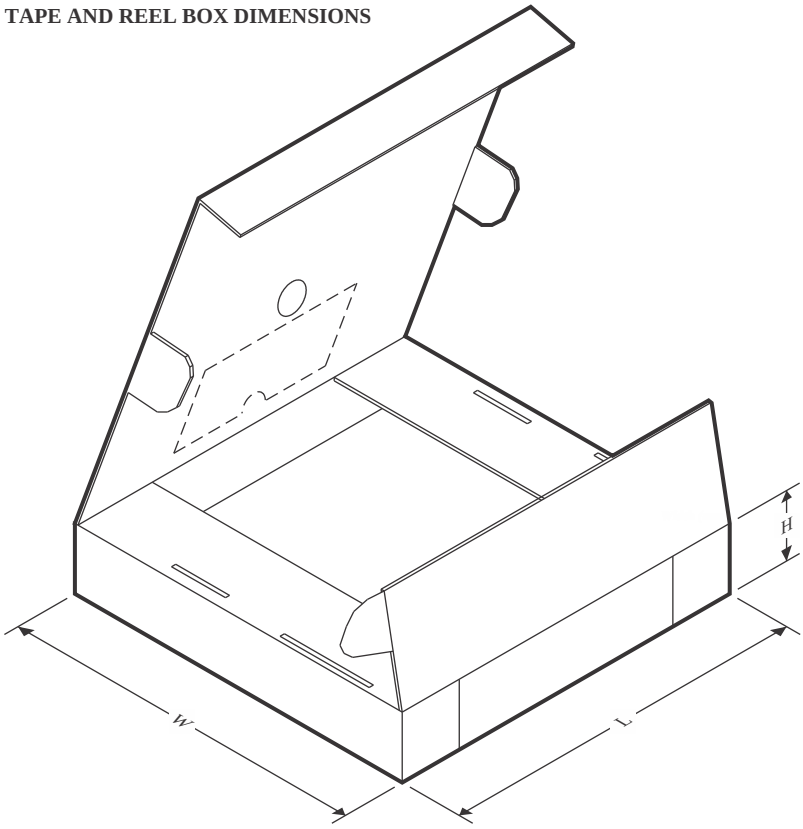

*All dimensions are nominal

Device	Package Type	Package Drawing	Pins	SPQ	Length (mm)	Width (mm)	Height (mm)
TPS53315RGFR	VQFN	RGF	40	3000	367.0	367.0	38.0
TPS53315RGFT	VQFN	RGF	40	250	210.0	185.0	35.0
TPS53315RGFTG4	VQFN	RGF	40	250	210.0	185.0	35.0

GENERIC PACKAGE VIEW

RGF 40

VQFN - 1 mm max height

5 x 7, 0.5 mm pitch

PLASTIC QUAD FLAT PACK- NO LEAD

This image is a representation of the package family, actual package may vary.
Refer to the product data sheet for package details.

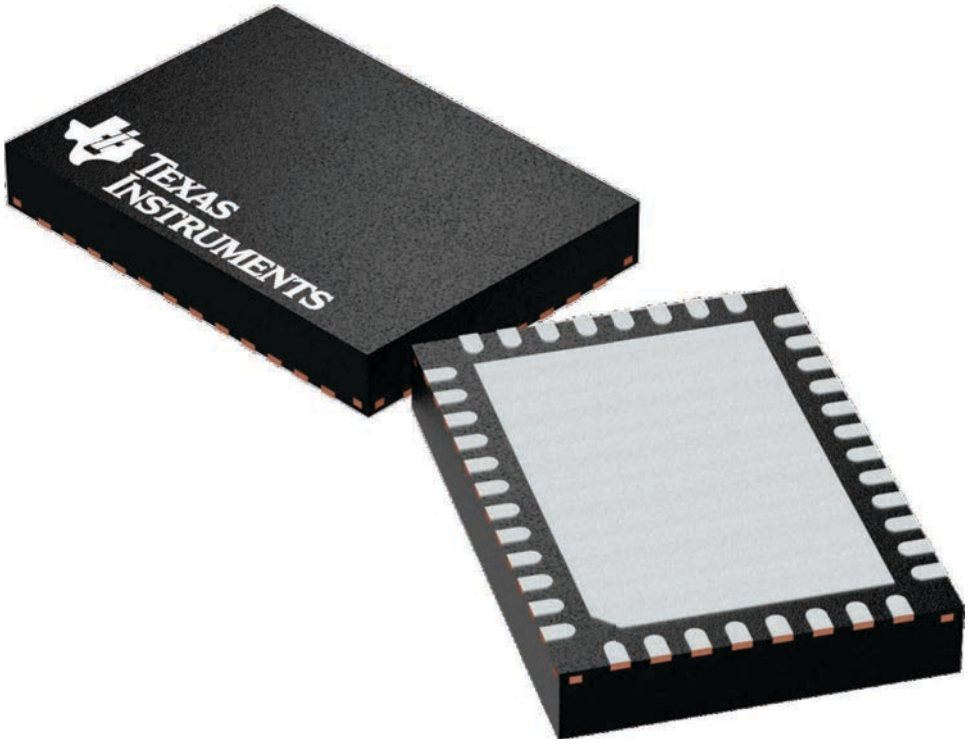

4225115/A

PLASTIC QUAD FLAT PACK- NO LEAD

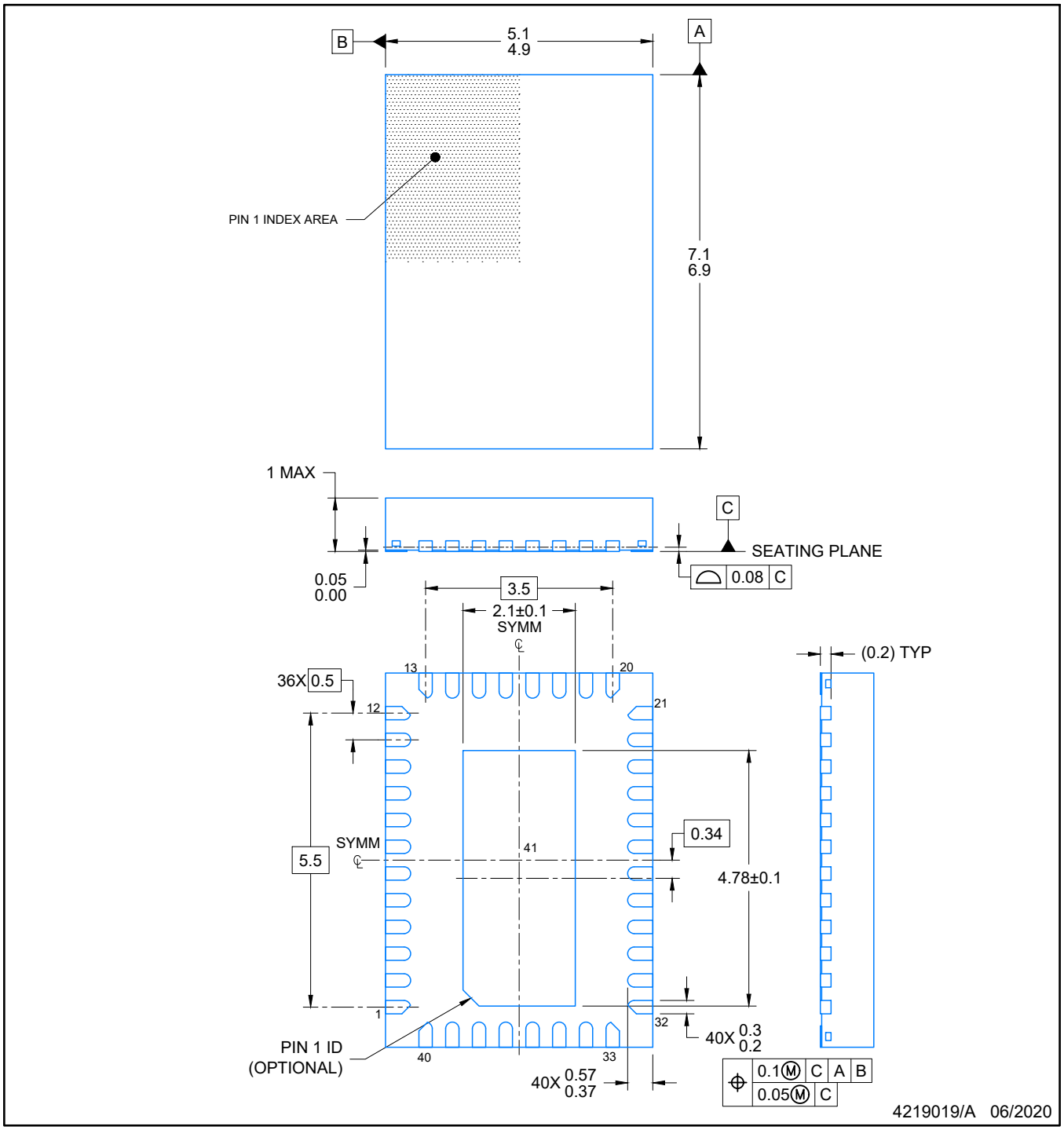

NOTES:

1. All linear dimensions are in millimeters. Any dimensions in parenthesis are for reference only. Dimensioning and tolerancing per ASME Y14.5M.
2. This drawing is subject to change without notice.
3. The package thermal pad must be soldered to the printed circuit board for optimal thermal and mechanical performance.

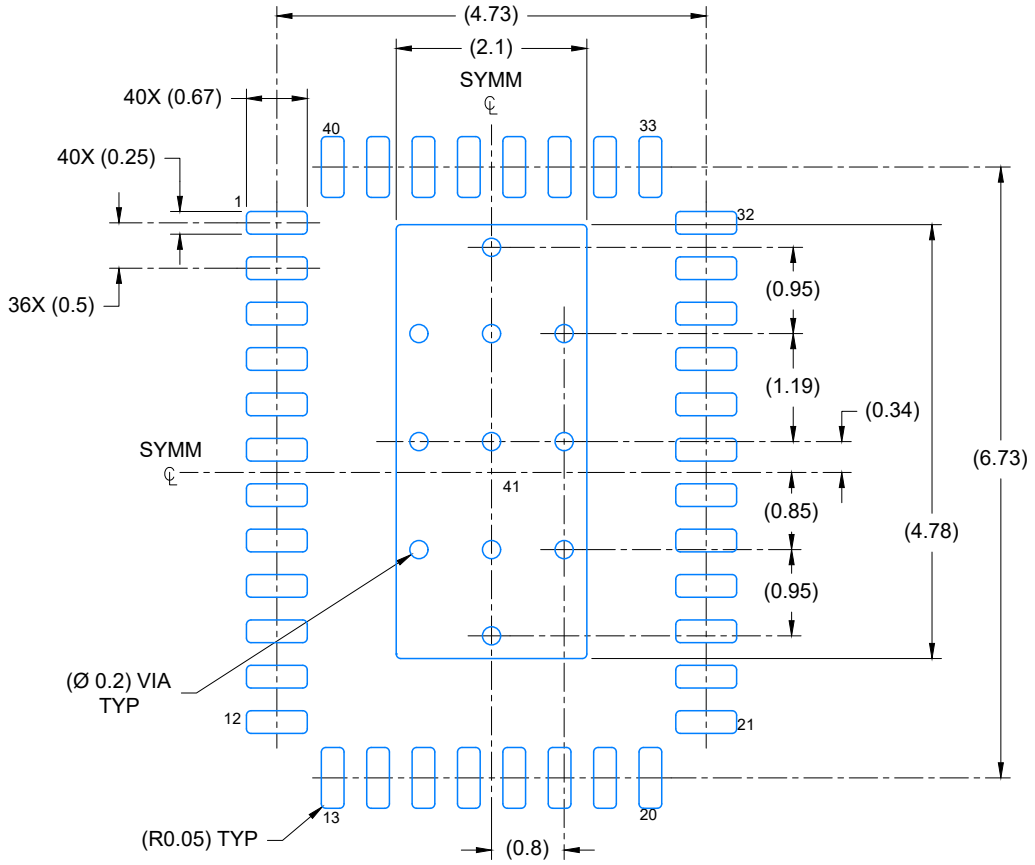

LAND PATTERN EXAMPLE
EXPOSED METAL SHOWN
SCALE: 12X

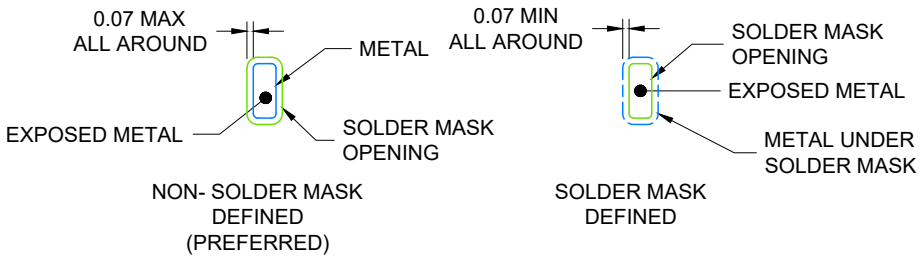

SOLDER MASK DETAILS

4219019/A 06/2020

NOTES: (continued)

4. This package is designed to be soldered to a thermal pad on the board. For more information, see Texas Instruments literature number SLUA271 (www.ti.com/lit/slua271).
5. Vias are optional depending on application, refer to device data sheet. If any vias are implemented, refer to their locations shown on this view. It is recommended that vias under paste be filled, plugged or tented.

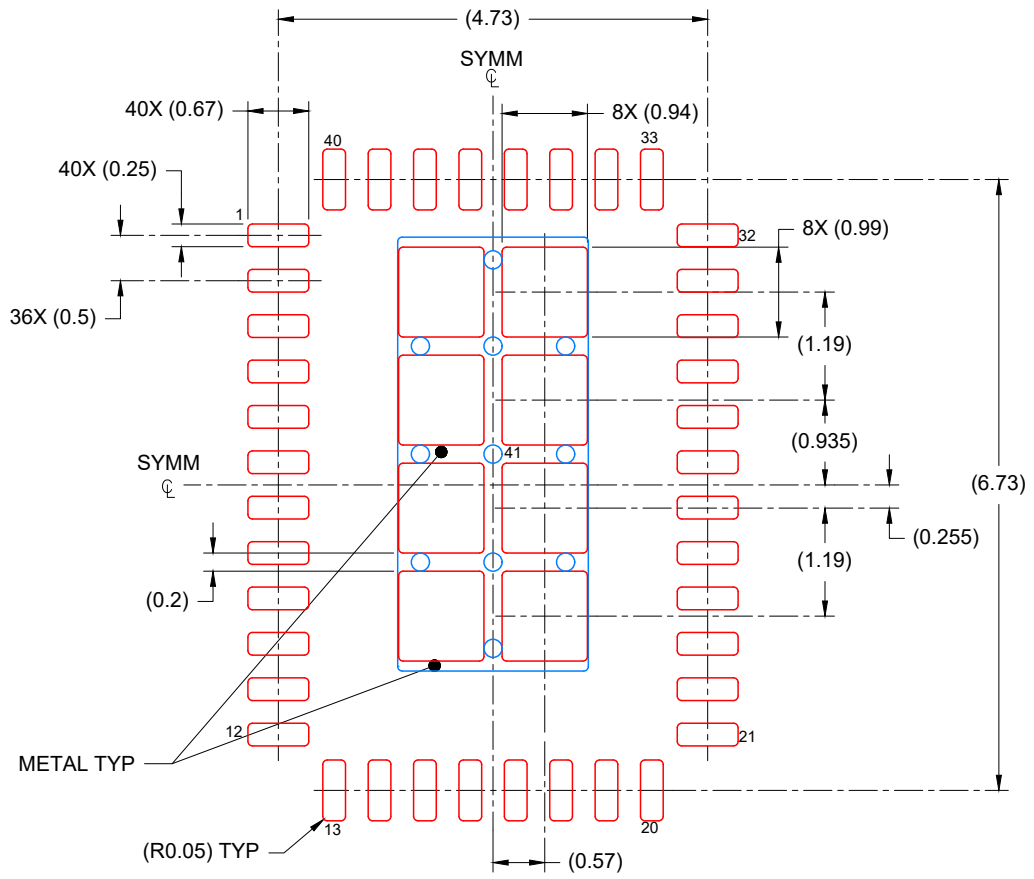

SOLDER PASTE EXAMPLE
BASED ON 0.125 mm THICK STENCIL

EXPOSED PAD
74% PRINTED COVERAGE BY AREA
SCALE: 12X

4219019/A 06/2020

NOTES: (continued)

6. Laser cutting apertures with trapezoidal walls and rounded corners may offer better paste release. IPC-7525 may have alternate design recommendations.

IMPORTANT NOTICE AND DISCLAIMER

TI PROVIDES TECHNICAL AND RELIABILITY DATA (INCLUDING DATA SHEETS), DESIGN RESOURCES (INCLUDING REFERENCE DESIGNS), APPLICATION OR OTHER DESIGN ADVICE, WEB TOOLS, SAFETY INFORMATION, AND OTHER RESOURCES “AS IS” AND WITH ALL FAULTS, AND DISCLAIMS ALL WARRANTIES, EXPRESS AND IMPLIED, INCLUDING WITHOUT LIMITATION ANY IMPLIED WARRANTIES OF MERCHANTABILITY, FITNESS FOR A PARTICULAR PURPOSE OR NON-INFRINGEMENT OF THIRD PARTY INTELLECTUAL PROPERTY RIGHTS.

These resources are intended for skilled developers designing with TI products. You are solely responsible for (1) selecting the appropriate TI products for your application, (2) designing, validating and testing your application, and (3) ensuring your application meets applicable standards, and any other safety, security, regulatory or other requirements.

These resources are subject to change without notice. TI grants you permission to use these resources only for development of an application that uses the TI products described in the resource. Other reproduction and display of these resources is prohibited. No license is granted to any other TI intellectual property right or to any third party intellectual property right. TI disclaims responsibility for, and you will fully indemnify TI and its representatives against, any claims, damages, costs, losses, and liabilities arising out of your use of these resources.

TI’s products are provided subject to TI’s Terms of Sale or other applicable terms available either on ti.com or provided in conjunction with such TI products. TI’s provision of these resources does not expand or otherwise alter TI’s applicable warranties or warranty disclaimers for TI products.

TI objects to and rejects any additional or different terms you may have proposed.

Mailing Address: Texas Instruments, Post Office Box 655303, Dallas, Texas 75265
Copyright © 2025, Texas Instruments Incorporated