16-A, 4.5-V to 14-V INPUT, NON-ISOLATED, WIDE-OUTPUT, ADJUSTABLE POWER MODULE WITH *TurboTrans*™

FEATURES

- **Up to 16-A Output Current**
- **4.5-V to 14-V Input Voltage**
- **Wide-Output Voltage Adjust (0.69 V to 5.5 V)**
- **±1.5% Total Output Voltage Variation**
- **Efficiencies up to 96%**
- **Output Overcurrent Protection (Nonlatching, Auto-Reset)**
- **Operating Temperature: –40°C to 85°C**
- **Safety Agency Approvals:**
  - **UL/IEC/CSA-C22.2 60950-1**
- **Prebias Startup**
- **On/Off Inhibit**
- **Differential Output Voltage Remote Sense**
- **Adjustable Undervoltage Lockout**
- **Ceramic Capacitor Version (PTH08T221W)**
- **POLA™ Compatible**
- **TurboTrans™ Technology**
- **Designed to meet Ultra-Fast Transient Requirements up to 300 A/µs**
- **SmartSync Technology**
- **Auto-Track™ Sequencing**

APPLICATIONS

- **Complex Multi-Voltage Systems**
- **Microprocessors**
- **Bus Drivers**

DESCRIPTION

The PTH08T220/221W is a high-performance 16-A rated, non-isolated power module. These modules represent the 2nd generation of the popular PTH series power modules and include a reduced footprint and improved features. The PTH08T221W is optimized to be used with all ceramic capacitors.

Operating from an input voltage range of 4.5 V to 14 V, the PTH08T220/221W requires a single resistor to set the output voltage to any value over the range, 0.69 V to 5.5 V. The wide input voltage range makes the PTH08T220/221W particularly suitable for advanced computing and server applications that utilize a loosely regulated 8-V to 12-V intermediate distribution bus. Additionally, the wide input voltage range increases design flexibility by supporting operation with tightly regulated 5-V, 8-V, or 12-V intermediate bus architectures.

The module incorporates a comprehensive list of features. Output over-current and over-temperature shutdown protects against most load faults. A differential remote sense ensures tight load regulation. An adjustable under-voltage lockout allows the turn-on voltage threshold to be customized. Auto-Track™ sequencing is a popular feature that greatly simplifies the simultaneous power-up and power-down of multiple modules in a power system.

The PTH08T220/221W includes new patent pending technologies, **TurboTrans™** and **SmartSync**. The TurboTrans feature optimizes the transient response of the regulator while simultaneously reducing the quantity of external output capacitors required to meet a target voltage deviation specification. Additionally, for a target output capacitor bank, TurboTrans can be used to significantly improve the regulators transient response by reducing the peak voltage deviation. SmartSync allows for switching frequency synchronization of multiple modules, thus simplifying EMI noise suppression tasks and reducing input capacitor RMS current requirements. The module uses double-sided surface mount construction to provide a low profile and compact footprint. Package options include both through-hole and surface mount configurations that are lead (Pb) - free and RoHS compatible.

Please be aware that an important notice concerning availability, standard warranty, and use in critical applications of Texas Instruments semiconductor products and disclaimers thereto appears at the end of this data sheet.

TurboTrans, POLA, Auto-Track, TMS320 are trademarks of Texas Instruments.

PRODUCTION DATA information is current as of publication date. Products conform to specifications per the terms of the Texas Instruments standard warranty. Production processing does not necessarily include testing of all parameters.

Copyright © 2005–2009, Texas Instruments Incorporated

These devices have limited built-in ESD protection. The leads should be shorted together or the device placed in conductive foam during storage or handling to prevent electrostatic damage to the MOS gates.

PTH08T220W

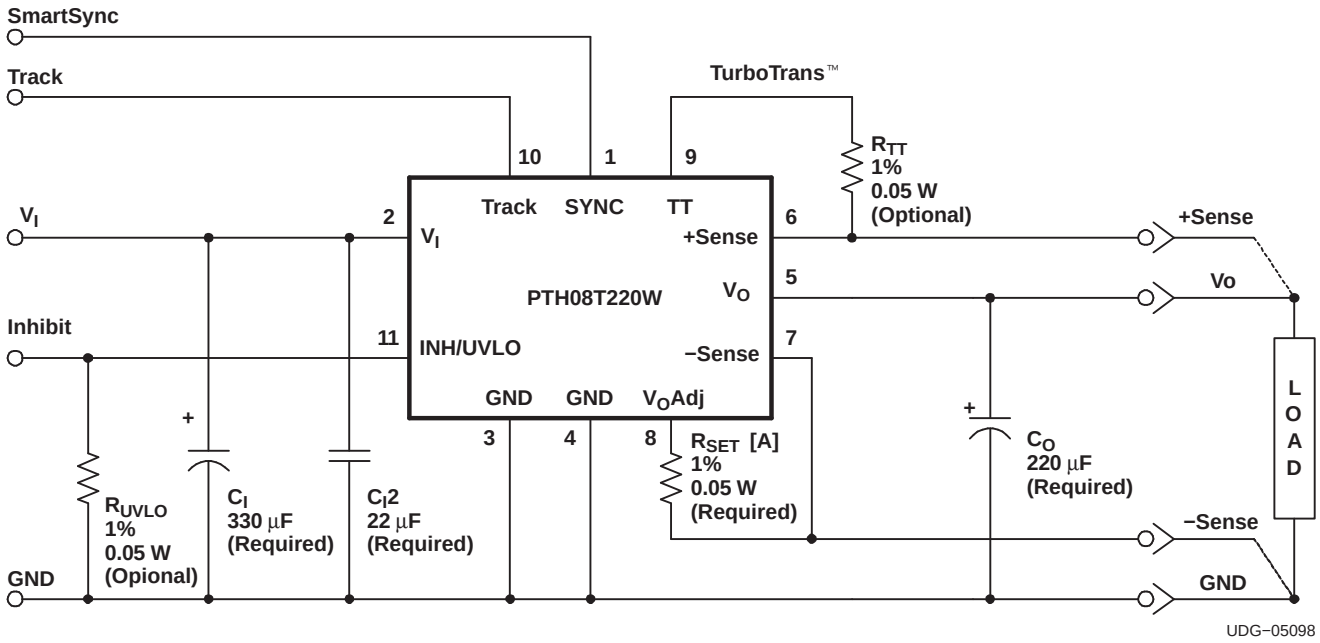

A. R_{SET} required to set the output voltage to a value higher than 0.69 V. See *Electrical Characteristics* table.

PTH08T221W - Ceramic Capacitor Version

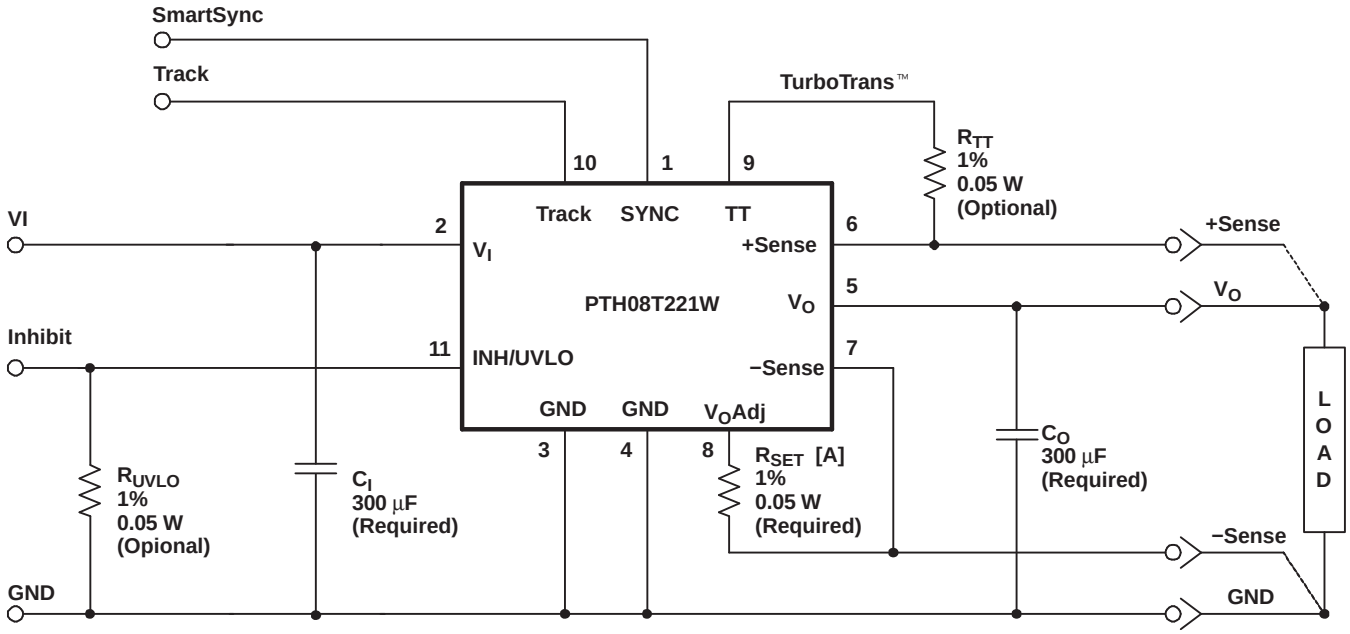

A. R_{SET} required to set the output voltage to a value higher than 0.69 V. See *Electrical Characteristics* table.

B. 300 µF of ceramic or 330 µF of electrolytic input capacitance is required for proper operation.

Copyright © 2005–2009, Texas Instruments Incorporated

ORDERING INFORMATION

For the most current package and ordering information, see the Package Option Addendum at the end of this datasheet, or see the TI website at www.ti.com.

DATASHEET TABLE OF CONTENTS

DATASHEET SECTION	PAGE NUMBER
ENVIRONMENTAL AND ABSOLUTE MAXIMUM RATINGS	3
ELECTRICAL CHARACTERISTICS TABLE (PTH08T220W)	4
ELECTRICAL CHARACTERISTICS TABLE (PTH08T221W)	6
TERMINAL FUNCTIONS	8
TYPICAL CHARACTERISTICS (V_I = 12V)	9
TYPICAL CHARACTERISTICS (V_I = 5V)	10
ADJUSTING THE OUTPUT VOLTAGE	11
INPUT & OUTPUT CAPACITOR RECOMMENDATIONS	13
TURBOTRANS™ INFORMATION	17
UNDERVOLTAGE LOCKOUT (UVLO)	22
SOFT-START POWER-UP	23
OUTPUT INHIBIT	24
OVER-CURRENT PROTECTION	25
OVER-TEMPERATURE PROTECTION	25
REMOTE SENSE	25
SYCHRONIZATION (SMARTSYNC)	26
AUTO-TRACK SEQUENCING	27
PREBIAS START-UP	30
TAPE & REEL AND TRAY DRAWINGS	32

ENVIRONMENTAL AND ABSOLUTE MAXIMUM RATINGS

(Voltages are with respect to GND)

					UNIT
V_{track}	Track pin voltage			–0.3 to V_I + 0.3	V
T_A	Operating temperature range	Over V_I range		–40 to 85	°C
T_{wave}	Wave soldering temperature	Surface temperature of module body or pins for 5 seconds maximum.	AH suffix	260	
			AD suffix		
T_{reflow}	Solder reflow temperature	Surface temperature of module body or pins	AS suffix	235 (1)	
			AZ suffix	260 (1)	
T_{stg}	Storage temperature	Storage temperature of module removed from shipping package		–55 to 125	
T_{pkg}	Packaging temperature	Shipping Tray or Tape and Reel storage or bake temperature		45	
	Mechanical shock	Per Mil-STD-883D, Method 2002.3 1 msec, 1/2 sine, mounted	AH and AD suffix	500	G
			AS and AZ suffix	125	
	Mechanical vibration	Mil-STD-883D, Method 2007.2 20-2000 Hz		20	
	Weight			5	grams
	Flammability	Meets UL94V-O			

(1) During reflow of surface mount package version do not elevate peak temperature of the module, pins or internal components above the stated maximum.

Copyright © 2005–2009, Texas Instruments Incorporated

ELECTRICAL CHARACTERISTICS
PTH08T220W

T_A = 25°C, V_I = 5 V, V_O = 3.3 V, C_I = 330 µF, C_I2 = 22 µF, C_O = 220 µF, and I_O = I_O max (unless otherwise stated)

PARAMETER		TEST CONDITIONS			PTH08T220W MIN	PTH08T220W TYP	PTH08T220W MAX	UNIT
I_O	Output current	Over V_O range	25°C, natural convection		0		16	A
V_I	Input voltage range	Over I_O range		0.69 ≤ V_O ≤ 1.2	4.5		14 (1)	V
				1.2 < V_O ≤ 3.6	4.5		14	
				3.6 < V_O ≤ 5.5	V_O + 2		14	
V_{OADJ}	Output voltage adjust range	Over I_O range			0.69		5.5	V
V_O	Set-point voltage tolerance					±0.5	±1 (2)	%V_o
	Temperature variation	–40°C < T_A < 85°C				±0.3		%V_o
	Line regulaltion	Over V_I range				±3		mV
	Load regulation	Over I_O range				±2		mV
	Total output variation	Includes set-point, line, load, –40°C ≤ T_A ≤ 85°C					±1.5 (2)	%V_o
η	Efficiency	I_O = 16 A	R_{SET} = 171 Ω, V_I = 8 V, V_O = 5.0 V			95%		
			R_{SET} = 1.21 kΩ, V_O = 3.3 V			94%		
			R_{SET} = 2.38 kΩ, V_O = 2.5 V			91%		
			R_{SET} = 4.78 kΩ, V_O = 1.8 V			88%		
			R_{SET} = 7.09 kΩ, V_O = 1.5 V			87%		
			R_{SET} = 12.1 kΩ, V_O = 1.2 V (1)			84%		
			R_{SET} = 20.8 kΩ, V_O = 1.0 V (1)			82%		
	V_O Ripple (peak-to-peak)	20-MHz bandwidth				15 (1)		mV_{PP}
I_{LIM}	Overcurrent threshold	Reset, followed by auto-recovery				32		A
t_{tr}	Transient response	2.5 A/µs load step 50 to 100% $I_O$max V_O = 2.5 V	w/o TurboTrans C_O= 220 µF, TypeC	Recovery time		70		µs
$ΔV_{tr}$				V_O over/undershoot		150		mV
t_{trTT}			w/ TurboTrans C_O= 2000 µF, TypeC R_{TT} = short	Recovery time		130		µs
$ΔV_{trTT}$				V_O over/undershoot		30		mV
I_{IL}	Track input current (pin 10)	Pin to GND					–130 (3)	µA
dV_{track}/dt	Track slew rate capability	C_O ≤ C_O (max)					1	V/ms
$UVLO_{ADJ}$	Adjustable Under-voltage lockout (pin 11)	V_I increasing, R_{UVLO} = OPEN				4.3	4.45	V
		V_I decreasing, R_{UVLO} = OPEN			3.7	4.2		
		Hysteresis, R_{UVLO} ≤ 52.3 kΩ				0.5		
	Inhibit control (pin 11)	Input high voltage (V_{IH})					Open (4)	V
		Input low voltage (V_{IL})			-0.2		0.8	
		Input low current (I_{IL}), Pin 11 to GND				-235		µA
I_{in}	Input standby current	Inhibit (pin 11) to GND, Track (pin 10) open				5		mA
f_s	Switching frequency	Over V_I and I_O ranges, SmartSync (pin 1) to GND				300		kHz
f_{SYNC}	Synchronization (SYNC) frequency				240		400	kHz
V_{SYNCH}	SYNC High-Level Input Voltage				2		5.5	V
V_{SYNCL}	SYNC Low-Level Input Voltage						0.8	V
t_{SYNC}	SYNC Minimum Pulse Width				200			nSec
C_I	External input capacitance			Nonceramic	330 (5)			µF
				Ceramic	22 (5)			

(1) For output voltages ≤ 1.2 V, at nominal operating frequency, the output ripple may increase (typically 2×) when operating at input voltages greater than (V_O × 11). When using the SmartSync feature to adjust the switching frequency, see the SmartSync Considerations section of the datasheet for further guidance.
(2) The set-point voltage tolerance is affected by the tolerance and stability of R_{SET}. The stated limit is unconditionally met if R_{SET} has a tolerance of 1% with 100 ppm/C or better temperature stability.
(3) A low-leakage (<100 nA), open-drain device, such as MOSFET or voltage supervisor IC, is recommended to control pin 10. The open-circuit voltage is less than 8 V_{dc}.
(4) Do not place an external pull-up on this pin. If it is left open-circuit, the module operates when input power is applied. A small, low-leakage (<100 nA) MOSFET is recommended for control. For additional information, see the related application section.
(5) A 330 µF electrolytic and a 22 µF ceramic input capacitor is required for proper operation. The electrolytic capacitor must be rated for a minimum of 700 mA rms of ripple current.

Copyright © 2005–2009, Texas Instruments Incorporated

ELECTRICAL CHARACTERISTICS PTH08T220W (continued)

T_A = 25°C, V_I = 5 V, V_O = 3.3 V, C_I = 330 µF, C_I2 = 22 µF, C_O = 220 µF, and I_O = I_O max (unless otherwise stated)

PARAMETER		TEST CONDITIONS			PTH08T220W			UNIT
					MIN	TYP	MAX	
C_O	External output capacitance	w/o TurboTrans	Capacitance Value	Nonceramic	220 (6)		5000 (7)	µF
				Ceramic			500	
			Equivalent series resistance (non-ceramic)		7			mΩ
		w/ TurboTrans	Capacitance Value		see table (6) (8)			µF
			Capacitance × ESR product (C_O × ESR)		1000		10000 (8)	µF×mΩ
MTBF	Reliability	Per Telcordia SR-332, 50% stress, T_A = 40°C, ground benign			6.1			10^6 Hr

(6) A 220 µF external output capacitor is required for basic operation. The minimum output capacitance requirement increases when *TurboTrans*™ (TT) technology is utilized. See related Application Information for more guidance.
(7) This is the calculated maximum disregarding *TurboTrans*™ technology.
(8) When using *TurboTrans*™ technology, a minimum value of output capacitance is required for proper operation. Additionally, low ESR capacitors are required for proper operation. See the application notes for further guidance.

Copyright © 2005–2009, Texas Instruments Incorporated

ELECTRICAL CHARACTERISTICS PTH08T221W (ceramic capacitors)

T_A = 25°C, V_I = 5 V, V_O = 3.3 V, C_I = 300 µF ceramic, C_O = 300 µF ceramic, and I_O = I_O max (unless otherwise stated)

PARAMETER		TEST CONDITIONS			PTH08T221W			UNIT
					MIN	TYP	MAX	
I_O	Output current	Over V_O range	25°C, natural convection		0		16	A
V_I	Input voltage range	Over I_O range		0.69 ≤ V_O ≤ 1.2	4.5		14 (1)	V
				1.2 < V_O ≤ 3.6	4.5		14	
				3.6 < V_O ≤ 5.5	V_O + 2		14	
V_{OADJ}	Output voltage adjust range	Over I_O range			0.69		5.5	V
V_O	Set-point voltage tolerance					±0.5	±1 (2)	%V_o
	Temperature variation	–40°C < T_A < 85°C				±0.3		%V_o
	Line regulaltion	Over V_I range				±3		mV
	Load regulation	Over I_O range				±2		mV
	Total output variation	Includes set-point, line, load, –40°C ≤ T_A ≤ 85°C					±1.5 (2)	%V_o
η	Efficiency	I_O = 16 A	R_{SET} = 171 Ω, V_I = 8 V, V_O = 5.0 V			95%		
			R_{SET} = 1.21 kΩ, V_O = 3.3 V			94%		
			R_{SET} = 2.38 kΩ, V_O = 2.5 V			91%		
			R_{SET} = 4.78 kΩ, V_O = 1.8 V			88%		
			R_{SET} = 7.09 kΩ, V_O = 1.5 V			87%		
			R_{SET} = 12.1 kΩ, V_O = 1.2 V (1)			84%		
			R_{SET} = 20.8 kΩ, V_O = 1.0 V (1)			82%		
	V_O Ripple (peak-to-peak)	20-MHz bandwidth				15 (1)		mV_{PP}
I_{LIM}	Overcurrent threshold	Reset, followed by auto-recovery				32		A
t_{tr}	Transient response	2.5 A/µs load step 50 to 100% $I_O$max V_O = 2.5 V	w/o TurboTrans C_O= 300 µF, TypeA	Recovery time		70		µs
$ΔV_{tr}$				V_O over/undershoot		150		mV
t_{trTT}			w/ TurboTrans C_O= 1500 µF, TypeA R_{TT} = short	Recovery time		200		µs
$ΔV_{trTT}$				V_O over/undershoot		65		mV
I_{IL}	Track input current (pin 10)	Pin to GND					–130 (3)	µA
dV_{track}/dt	Track slew rate capability	C_O ≤ C_O (max)					1	V/ms
$UVLO_{ADJ}$	Adjustable Under-voltage lockout (pin 11)	V_I increasing, R_{UVLO} = OPEN				4.3	4.45	V
		V_I decreasing, R_{UVLO} = OPEN			3.7	4.2		
		Hysteresis, R_{UVLO} ≤ 52.3 kΩ				0.5		
	Inhibit control (pin 11)	Input high voltage (V_{IH})					Open (4)	V
		Input low voltage (V_{IL})			-0.2		0.8	
		Input low current (I_{IL}), Pin 11 to GND				-235		µA
I_{in}	Input standby current	Inhibit (pin 11) to GND, Track (pin 10) open				5		mA
f_s	Switching frequency	Over V_I and I_O ranges, SmartSync (pin 1) to GND				300		kHz
f_{SYNC}	Synchronization (SYNC) frequency				240		400	kHz
V_{SYNCH}	SYNC High-Level Input Voltage				2		5.5	V
V_{SYNCL}	SYNC Low-Level Input Voltage						0.8	V
t_{SYNC}	SYNC Minimum Pulse Width				200			nSec
C_I	External input capacitance				300 (5)			µF

(1) For output voltages ≤ 1.2 V, at nominal operating frequency, the output ripple may increase (typically 2×) when operating at input voltages greater than (V_O × 11). When using the SmartSync feature to adjust the switching frequency, see the SmartSync Considerations section of the datasheet for further guidance.
(2) The set-point voltage tolerance is affected by the tolerance and stability of R_{SET}. The stated limit is unconditionally met if R_{SET} has a tolerance of 1% with 100 ppm/C or better temperature stability.
(3) A low-leakage (<100 nA), open-drain device, such as MOSFET or voltage supervisor IC, is recommended to control pin 10. The open-circuit voltage is less than 8 V_{dc}.
(4) Do not place an external pull-up on this pin. If it is left open-circuit, the module operates when input power is applied. A small, low-leakage (<100 nA) MOSFET is recommended for control. For additional information, see the related application section.
(5) 300 µF of input capacitance is required for proper operation. 300 µF of ceramic or 330 µF of electrolytic input capacitance can be used. Electrolytic capacitance must be rated for a minimum of 700 mA rms of ripple current. An additional 22-µF ceramic input capacitor is recommended to reduce rms ripple current.

Copyright © 2005–2009, Texas Instruments Incorporated

ELECTRICAL CHARACTERISTICS
PTH08T221W (ceramic capacitors) (continued)

T_A = 25°C, V_I = 5 V, V_O = 3.3 V, C_I = 300 µF ceramic, C_O = 300 µF ceramic, and I_O = I_O max (unless otherwise stated)

PARAMETER		TEST CONDITIONS			PTH08T221W			UNIT
					MIN	TYP	MAX	
C_O	External output capacitance	w/o TurboTrans	Capacitance Value	Ceramic	300 (6)		3000 (7)	µF
		w/ TurboTrans	Capacitance Value		see table (6)		5000	µF
			Capacitance × ESR product (C_O × ESR)		100		1000	µF×mΩ
MTBF	Reliability	Per Telcordia SR-332, 50% stress, T_A = 40°C, ground benign			6.1			10^6 Hr

(6) A minimum of 300 µF ceramic external output capacitance is required for basic operation. The minimum output capacitance requirement increases when *TurboTrans*™ (TT) technology is utilized. See related Application Information section for more guidance.
(7) This is the calculated maximum disregarding *TurboTrans*™ technology.

TERMINAL FUNCTIONS

TERMINAL		DESCRIPTION
NAME	NO.	
V_I	2	The positive input voltage power node to the module, which is referenced to common GND.
V_O	5	The regulated positive power output with respect to GND.
GND	3, 4	This is the common ground connection for the V_I and V_O power connections. It is also the 0 V_{dc} reference for the control inputs.
Inhibit(1) and UVLO	11	The Inhibit pin is an open-collector/drain, negative logic input that is referenced to GND. Applying a low level ground signal to this input disables the module's output and turns off the output voltage. When the Inhibit control is active, the input current drawn by the regulator is significantly reduced. If the Inhibit pin is left open-circuit, the module produces an output whenever a valid input source is applied. This pin is also used for input undervoltage lockout (UVLO) programming. Connecting a resistor from this pin to GND (pin 3) allows the ON threshold of the UVLO to be adjusted higher than the default value. For more information, see the Application Information section.
V_o Adjust	8	A 0.05 W 1% resistor must be directly connected between this pin and pin7 (–Sense) to set the output voltage to a value higher than 0.69V. The temperature stability of the resistor should be 100 ppm/°C (or better). The setpoint range for the output voltage is from 0.69V to 5.5V. If left open circuit, the output voltage will default to its lowest value. For further information, on output voltage adjustment see the related application note. The specification table gives the preferred resistor values for a number of standard output voltages.
+ Sense	6	The sense input allows the regulation circuit to compensate for voltage drop between the module and the load. The +Sense pin should always be connected to V_O, either at the load for optimal voltage accuracy, or at the module (pin 5).
– Sense	7	The sense input allows the regulation circuit to compensate for voltage drop between the module and the load. For optimal voltage accuracy –Sense must be connected to GND (pin4) very close to the module (within 10cm).
Track	10	This is an analog control input that enables the output voltage to follow an external voltage. This pin becomes active typically 20 ms after the input voltage has been applied, and allows direct control of the output voltage from 0 V up to the nominal set-point voltage. Within this range the module's output voltage follows the voltage at the Track pin on a volt-for-volt basis. When the control voltage is raised above this range, the module regulates at its set-point voltage. The feature allows the output voltage to rise simultaneously with other modules powered from the same input bus. If unused, this input should be connected to V_I. NOTE: Due to the undervoltage lockout feature, the output of the module cannot follow its own input voltage during power up. For more information, see the related application note.
TurboTrans™	9	This input pin adjusts the transient response of the regulator. To activate the *TurboTrans*™ feature, a 1%, 50mW resistor, must be connected between this pin and pin 6 (+Sense) very close to the module. For a given value of output capacitance, a reduction in peak output voltage deviation is achieved by utililizing this feature. If unused, this pin must be left open-circuit. The resistance requirement can be selected from the TurboTrans resistor table in the Application Information section. External capacitance must never be connected to this pin unless the TurboTrans resistor value is a short, 0Ω.
SmartSync	1	This input pin sychronizes the switching frequency of the module to an external clock frequency. The SmartSync feature can be used to sychronize the switching fequency of multiple PTH08T220/221W modules, aiding EMI noise suppression efforts. If unused, this pin should be connected to GND (pin3). For more information, please review the Application Information section.

(1) Denotes negative logic: Open = Normal operation, Ground = Function active

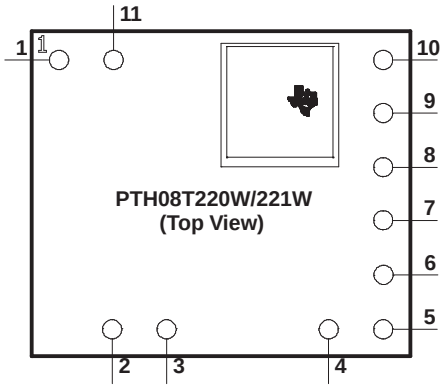

Copyright © 2005–2009, Texas Instruments Incorporated

TYPICAL CHARACTERISTICS(1)(2)

CHARACTERISTIC DATA (V_I = 12 V)

EFFICIENCY vs LOAD CURRENT

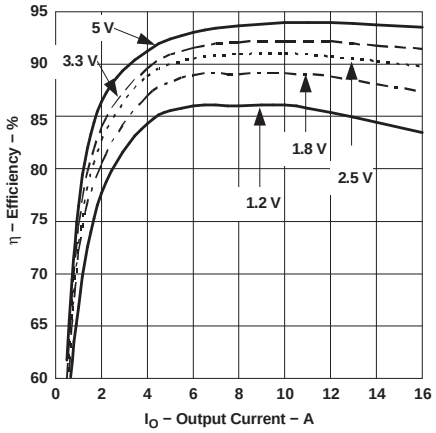

Figure 1.

OUTPUT RIPPLE vs LOAD CURRENT

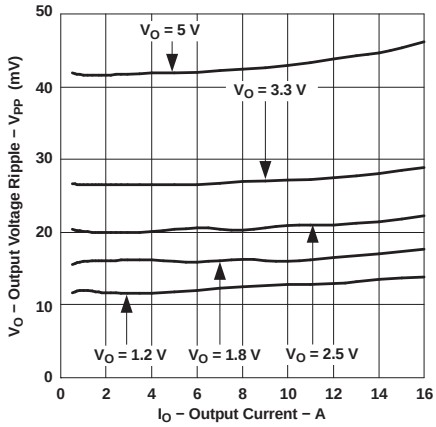

Figure 2.

POWER DISSIPATION vs LOAD CURRENT

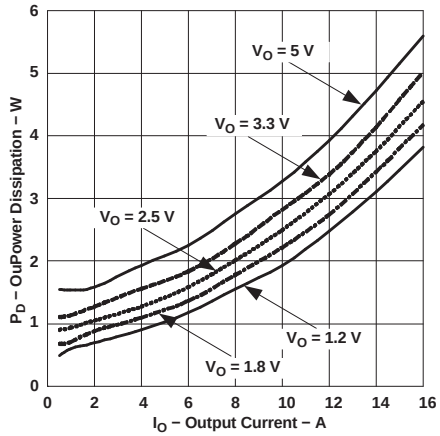

Figure 3.

AMBIENT TEMPERATURE vs LOAD CURRENT

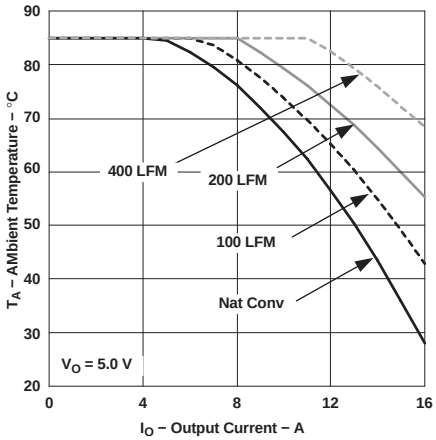

Figure 4. Safe Operating Area

AMBIENT TEMPERATURE vs LOAD CURRENT

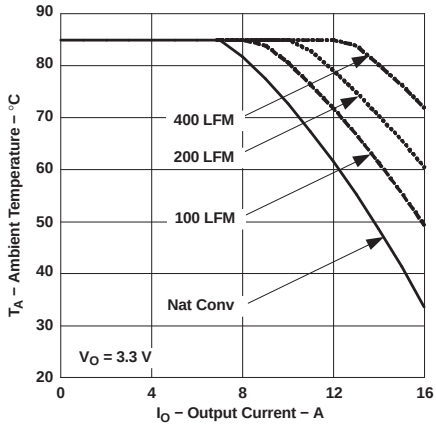

Figure 5. Safe Operating Area

AMBIENT TEMPERATURE vs LOAD CURRENT

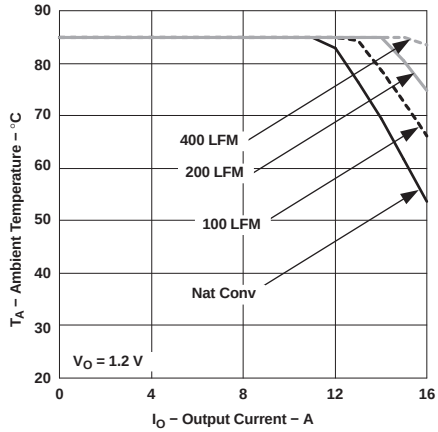

Figure 6. Safe Operating Area

(1) The electrical characteristic data has been developed from actual products tested at 25C. This data is considered typical for the converter. Applies to Figure 1, Figure 2, and Figure 3.

(2) The temperature derating curves represent the conditions at which internal components are at or below the manufacturer's maximum operating temperatures. Derating limits apply to modules soldered directly to a 100 mm x 100 mm double-sided PCB with 2 oz. copper. For surface mount packages (AS and AZ suffix), multiple vias must be utilized. Please refer to the mechanical specification for more information. Applies to Figure 5.

Copyright © 2005–2009, Texas Instruments Incorporated

TYPICAL CHARACTERISTICS(1)(2)

CHARACTERISTIC DATA (V_I = 5 V)

EFFICIENCY vs LOAD CURRENT

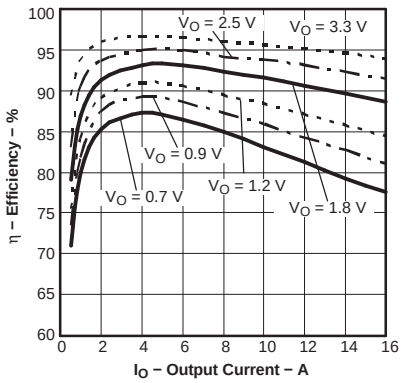

Figure 7.

OUTPUT RIPPLE vs LOAD CURRENT

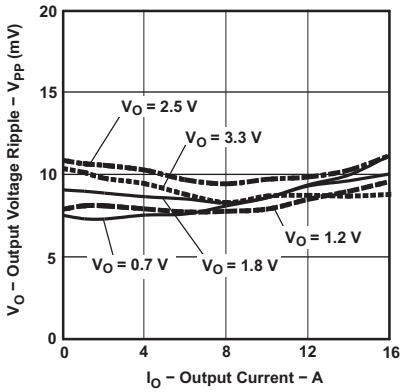

Figure 8.

POWER DISSIPATION vs LOAD CURRENT

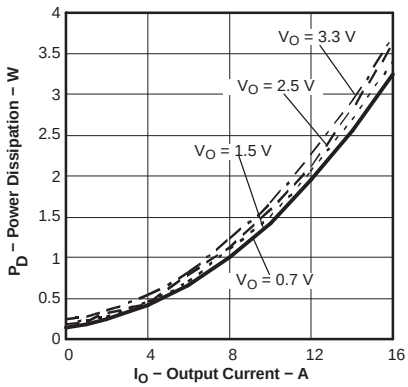

Figure 9.

AMBIENT TEMPERATURE vs LOAD CURRENT

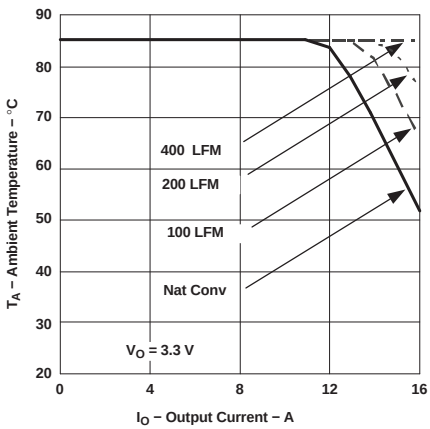

Figure 10. Safe Operating Area

AMBIENT TEMPERATURE vs LOAD CURRENT

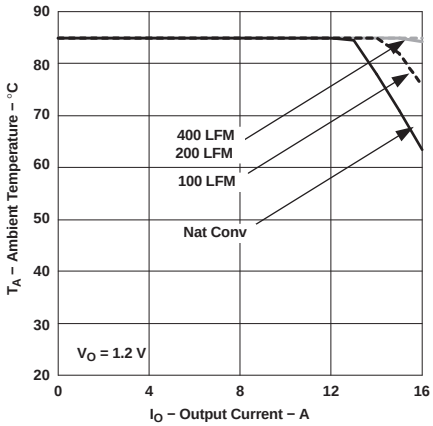

Figure 11. Safe Operating Area

(1) The electrical characteristic data has been developed from actual products tested at 25C. This data is considered typical for the converter. Applies to Figure 7, Figure 8, and Figure 9.

(2) The temperature derating curves represent the conditions at which internal components are at or below the manufacturer's maximum operating temperatures. Derating limits apply to modules soldered directly to a 100 mm x 100 mm double-sided PCB with 2 oz. copper. For surface mount packages (AS and AZ suffix), multiple vias must be utilized. Please refer to the mechanical specification for more information. Applies to Figure 10.

Copyright © 2005–2009, Texas Instruments Incorporated

APPLICATION INFORMATION

ADJUSTING THE OUTPUT VOLTAGE

The V_o Adjust control (pin 8) sets the output voltage of the PTH08T220/221W. The adjustment range of the PTH08T220/221W is 0.69 V to 5.5 V. The adjustment method requires the addition of a single external resistor, R_{SET}, that must be connected directly between the V_o Adjust and – Sense pins. Table 1 gives the standard value of the external resistor for a number of standard voltages, along with the actual output voltage that this resistance value provides.

For other output voltages, the value of the required resistor can either be calculated using the following formula, or simply selected from the range of values given in Table 2. Figure 12 shows the placement of the required resistor.

$$R_{SET} = 10\ k\Omega \times \frac{0.69}{V_O - 0.69} - 1.43\ k\Omega \quad (1)$$

Table 1. Standard Values of R_{SET} for Standard Output Voltages

V_O (Standard)	R_{SET} (Standard Value)	V_O (Actual)
5.0 V (1)	169 Ω	5.005 V
3.3 V	1.21 kΩ	3.304 V
2.5 V	2.37 kΩ	2.506 V
1.8 V	4.75 kΩ	1.807 V
1.5 V	6.98 kΩ	1.510 V
1.2 V (2)	12.1 kΩ	1.200 V
1.0 V (2)	20.5 kΩ	1.004 V
0.7 V (2)	681 kΩ	0.700 V

(1) For V_O > 3.6 V, the minimum input voltage is (V_O + 2) V.
(2) For output voltages ≤ 1.2V, at nominal operating frequency, the output ripple may increase (typically 2×) when operating at input voltages greater than (V_O × 11). When using the SmartSync feature, review the SmartSync application section for further guidance.

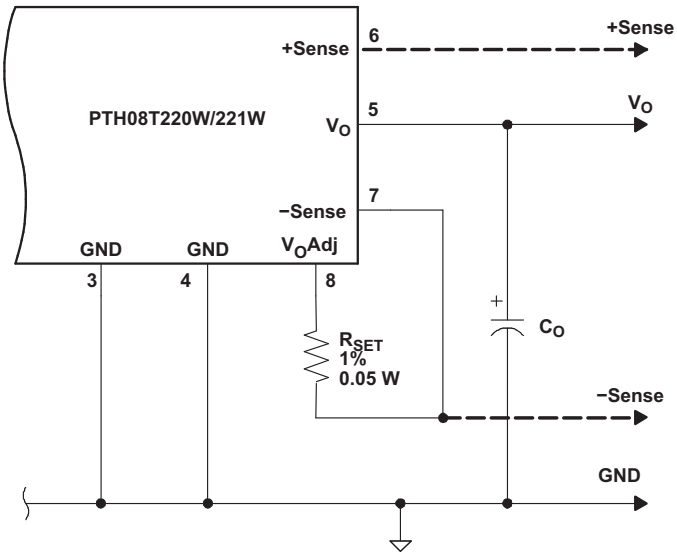

(1) **R_{SET}:** Use a 0.05 W resistor with a tolerance of 1% and temperature stability of 100 ppm/°C (or better). Connect the resistor directly between pins 8 and 7, as close to the regulator as possible, using dedicated PCB traces.

(2) Never connect capacitors from V_O Adjust to either + Sense, GND, or V_O. Any capacitance added to the V_O Adjust pin affects the stability of the regulator.

Figure 12. V_O Adjust Resistor Placement

Table 2. Output Voltage Set-Point Resistor Values (Standard Values)

V_O Required	R_{SET}(Ω)	V_O Required (V)	R_{SET}(Ω)
0.70 (1)	681 k	2.50	2.37 k
0.75 (1)	113 k	2.60	2.15 k
0.80 (1)	61.9 k	2.70	2.00 k
0.85 (1)	41.2 k	2.80	1.82 k
0.90 (1)	31.6 k	2.90	1.69 k
0.95 (1)	24.9 k	3.00	1.54 k
1.00 (1)	20.5 k	3.10	1.43 k
1.05 (1)	17.8 k	3.20	1.33 k
1.10 (1)	15.4 k	3.30	1.21 k
1.15 (1)	13.3 k	3.40	1.10 k
1.20 (1)	12.1 k	3.50	1.02 k
1.25	10.7 k	3.60	931
1.30	9.88 k	3.70 (2)	866
1.35	9.09 k	3.80 (2)	787
1.40	8.25 k	3.90 (2)	715
1.45	7.68 k	4.00 (2)	649
1.50	6.98 k	4.10 (2)	590
1.55	6.49 k	4.20 (2)	536
1.60	6.04 k	4.30 (2)	475
1.65	5.76 k	4.40 (2)	432
1.70	5.36 k	4.50 (2)	383
1.75	5.11 k	4.60 (2)	332
1.80	4.75 k	4.70 (2)	287
1.85	4.53 k	4.80 (2)	249
1.90	4.22 k	4.90 (2)	210
1.95	4.02 k	5.00 (2)	169
2.00	3.83 k	5.10 (2)	133
2.10	3.40 k	5.20 (2)	100
2.20	3.09 k	5.30 (2)	66.5
2.30	2.87 k	5.40 (2)	34.8
2.40	2.61 k	5.50 (2)	4.99

(1) For output voltages ≤ 1.2V, at nominal operating frequency, the output ripple may increase (typically 2×) when operating at input voltages greater than (V_O × 11). When using the SmartSync feature, review the SmartSync application section for further guidance.
(2) For V_O > 3.6 V, the minimum input voltage is (V_O + 2) V.

Copyright © 2005–2009, Texas Instruments Incorporated

CAPACITOR RECOMMENDATIONS FOR THE PTH08T220/221W POWER MODULE

Capacitor Technologies

Electrolytic Capacitors

When using electrolytic capacitors, high quality, computer-grade electrolytic capacitors are recommended. Aluminum electrolytic capacitors provide adequate decoupling over the frequency range, 2 kHz to 150 kHz, and are suitable when ambient temperatures are above -20°C. For operation below -20°C, tantalum, ceramic, or OS-CON type capacitors are required.

Ceramic Capacitors

Above 150 kHz the performance of aluminum electrolytic capacitors is less effective. Multilayer ceramic capacitors have very low ESR and a resonant frequency higher than the bandwidth of the regulator. They can be used to reduce the reflected ripple current at the input as well as improve the transient response of the output.

Tantalum, Polymer-Tantalum Capacitors

Tantalum type capacitors may only used on the output bus, and are recommended for applications where the ambient operating temperature is less than 0°C. The AVX TPS series and Kemet capacitor series are suggested over many other tantalum types due to their lower ESR, higher rated surge, power dissipation, and ripple current capability. Tantalum capacitors that have no stated ESR or surge current rating are not recommended for power applications.

Input Capacitor (Required)

The PTH08T221W requires a minimum input capacitance of 300µF of ceramic type.

The PTH08T220W requires a combination of one 22µF X5R/X7R ceramic and 330µF electrolytic type. The ripple current rating of the electrolytic capacitor must be at least 950mArms. The ripple current rating must increase to 1500mArms when V_O>2.1 V and I_O≥11A.

Input Capacitor Information

The size and value of the input capacitor is determined by the converter's transient performance capability. This minimum value assumes that the converter is supplied with a responsive, low inductance input source. This source should have ample capacitive decoupling, and be distributed to the converter via PCB power and ground planes.

Ceramic capacitors should be located as close as possible to the module's input pins, within 0.5 inch (1,3 cm). Adding ceramic capacitance is necessary to reduce the high-frequency ripple voltage at the module's input. This will reduce the magnitude of the ripple current through the electroytic capacitor, as well as the amount of ripple current reflected back to the input source. Additional ceramic capacitors can be added to further reduce the RMS ripple current requirement for the electrolytic capacitor.

Increasing the minimum input capacitance to 680µF is recommended for high-performance applications, or wherever the input source performance is degraded.

The main considerations when selecting input capacitors are the RMS ripple current rating, temperature stability, and less than 100 mΩ of equivalent series resistance (ESR).

Regular tantalum capacitors are not recommended for the input bus. These capacitors require a recommended minimum voltage rating of 2 × (maximum dc voltage + ac ripple). This is standard practice to ensure reliability. No tantalum capacitors were found with a sufficient voltage rating to meet this requirement.

When the operating temperature is below 0°C, the ESR of aluminum electrolytic capacitors increases. For these applications, OS-CON, poly-aluminum, and polymer-tantalum types should be considered.

Copyright © 2005–2009, Texas Instruments Incorporated

Output Capacitor (Required)

The PTH08T221W requires a minimum output capacitance of 300µF of ceramic type.

The PTH08T220W requires a minimum output capacitance of 220µF of aluminum, polymer-aluminum, tantulum, or polymer-tantalum type.

The required capacitance above the minimum will be determined by actual transient deviation requirements. See the TurboTrans Technology application section within this document for specific capacitance selection.

Output Capacitor Information

When selecting output capacitors, the main considerations are capacitor type, temperature stability, and ESR. When using the TurboTrans feature, the capacitance X ESR product should also be considered (see the following section).

Ceramic output capacitors added for high-frequency bypassing should be located as close as possible to the load to be effective. Ceramic capacitor values below 10µF should not be included when calculating the total output capacitance value.

When the operating temperature is below 0°C, the ESR of aluminum electrolytic capacitors increases. For these applications, OS-CON, poly-aluminum, and polymer-tantalum types should be considered.

TurboTrans Output Capacitance

TurboTrans allows the designer to optimize the output capacitance according to the system transient design requirement. High quality, ultra-low ESR capacitors are required to maximize TurboTrans effectiveness. When using TurboTrans, the capacitor's capacitance (µF) × ESR (mΩ) product determines its capacitor type; Type A, B, or C. These three types are defined as follows:

Type A = (100 ≤ capacitance × ESR ≤ 1000) (e.g. ceramic)

Type B = (1000 < capacitance × ESR ≤ 5000) (e.g. polymer-tantalum)

Type C = (5000 < capacitance × ESR ≤ 10,000) (e.g. OS-CON)

When using more than one type of output capacitor, select the capacitor type that makes up the majority of your total output capacitance. When calculating the C×ESR product, use the maximum ESR value from the capacitor manufacturer's datasheet.

The PTH08T221W should be used when only Type A (ceramic) capacitors are used on the output.

Working Examples:

A capacitor with a capacitance of 330µF and an ESR of 5mΩ, has a C×ESR product of 1650µFxmΩ (330µF × 5mΩ). This is a Type B capacitor. A capacitor with a capacitance of 1000µF and an ESR of 8mΩ, has a C×ESR product of 8000µFxmΩ (1000µF × 8mΩ). This is a Type C capacitor.

See the TurboTrans Technology application section within this document for specific capacitance selection.

Table 3 includes a preferred list of capacitors by type and vendor. See the Output Bus / TurboTrans column.

Non-TurboTrans Output Capacitance

If the TurboTrans feature is not used, minimum ESR and maximum capacitor limits must be followed. System stability may be effected and increased output capacitance may be required without TurboTrans.

When using the PTH08T220W, observe the minimum ESR of the entire output capacitor bank. The minimum ESR limit of the output capacitor bank is 7mΩ. A list of preferred low-ESR type capacitors, are identified in Table 3.

When using the PTH08T221W without the TurboTrans feature, the maximum amount of capacitance is 3000µF of ceramic type. Large amounts of capacitance may reduce system stability.

Utilizing the TurboTrans feature improves system stability, improves transient response, and reduces the amount of output capacitance required to meet system transient design requirements.

Copyright © 2005–2009, Texas Instruments Incorporated

Designing for Fast Load Transients

The transient response of the dc/dc converter has been characterized using a load transient with a di/dt of 2.5A/µs. The typical voltage deviation for this load transient is given in the Electrical Characteristics table using the minimum required value of output capacitance. As the di/dt of a transient is increased, the response of a converter's regulation circuit ultimately depends on its output capacitor decoupling network. This is an inherent limitation with any dc/dc converter once the speed of the transient exceeds its bandwidth capability.

If the target application specifies a higher di/dt or lower voltage deviation, the requirement can only be met with additional low ESR ceramic capacitor decoupling. Generally, with load steps greater than 100A/µs, adding multiple 10µF ceramic capacitors plus 10×1µF, and numerous high frequency ceramics (≤0.1µF) is all that is required to soften the transient higher frequency edges. The PCB location of these capacitors in relation to the load is critical. DSP, FPGA and ASIC vendors identify types, location and amount of capacitance required for optimum performance. Low impedance buses, unbroken PCB copper planes, and components located as close as possible to the high frequency devices are essential for optimizing transient performance.

Capacitor Table

Table 3 identifies the characteristics of acceptable capacitors from a number of vendors. The recommended number of capacitors required at both the input and output buses is identified for each capacitor.

This is not an extensive capacitor list. Capacitors from other vendors are available with comparable specifications. Those listed are for guidance. The RMS ripple current rating and ESR (at 100 kHz) are critical parameters necessary to ensure both optimum regulator performance and long capacitor life.

Table 3. Input/Output Capacitors(1)

Capacitor Vendor, Type Series (Style)	Capacitor Characteristics					Quantity			
							Output Bus		
	Working Voltage	Value (µF)	Max. ESR at 100 kHz	Max Ripple Current at 85°C (Irms)	Physical Size (mm)	Input Bus	No Turbo-Trans	Turbo-Trans Cap Type(2)	Vendor Part No.
Panasonic									
FC (Radial)	25 V	1000	43mΩ	1690mA	16 × 15	1	≥ 2(3)	N/R(4)	EEUFC1E102S
FC (Radial)	25 V	820	38mΩ	1655mA	12 × 20	1	≥ 1(3)	N/R(4)	EEUFC1E821S
FC (SMD)	35 V	470	43mΩ	1690mA	16 × 16,5	1	≥ 1(3)	N/R(4)	EEVFC1V471N
FK (SMD)	35 V	1000	35mΩ	1800mA	16 ×16,5	1	≥ 2(3)	N/R(4)	EEVFK1V102M
United Chemi-Con									
PTB, Poly-Tantalum(SMD)	6.3 V	330	25mΩ	2600mA	7,3×4,3×2.8	N/R(5)	1 ~ 4(3)	C ≥ 2(2)	6PTB337MD6TER (V_O≤ 5.1V)(6)
LXZ, Aluminum (Radial)	35 V	680	38mΩ	1660mA	12,5 × 20	1	1 ~ 3(3)	N/R(4)	LXZ35VB681M12X20LL
PS, Poly-Alum (Radial)	16 V	330	14mΩ	5060mA	10 × 12,5	1	1 ~ 3	B ≥ 2(2)	16PS330MJ12
PS, Poly-Alum (Radial)	6.3 V	390	12mΩ	5500mA	8 × 12,5	N/R(5)	1 ~ 2	B ≥ 1(2)	6PS390MH11 (V_O≤ 5.1V)(6)
PXA, Poly-Alum (SMD)	16 V	330	14mΩ	5050mA	10 × 12,2	1	1 ~ 3	B ≥ 2(2)	PXA16VC331MJ12TP
PXA, Poly-Alum (Radial)	10 V	330	14mΩ	4420mA	8 × 12,2	N/R(5)	1 ~ 2	B ≥ 1(2)	PXA10VC331MH12

(1) **Capacitor Supplier Verification**
Please verify availability of capacitors identified in this table. Capacitor suppliers may recommend alternative part numbers because of limited availability or obsolete products.
RoHS, Lead-free and Material Details
See the capacitor suppliers regarding material composition, RoHS status, lead-free status, and manufacturing process requirements. Component designators or part number deviations can occur when material composition or soldering requirements are updated.
(2) Required capacitors with TurboTrans. See the TurboTrans Application information for Capacitor Selection
Capacitor Types:
a. Type A = (100 < capacitance × ESR ≤ 1000)
b. Type B = (1,000 < capacitance × ESR ≤ 5,000)
c. Type C = (5,000 < capacitance × ESR ≤ 10,000)
(3) Total bulk nonceramic capacitors on the output bus with ESR ≥ 15mΩ to ≤ 30mΩ requires an additional 200 µF of ceramic capacitance.
(4) Aluminum Electrolytic capacitor not recommended for the TurboTrans due to higher ESR × capacitance products. Aluminum and higher ESR capacitors can be used in conjunction with lower ESR capacitance.
(5) N/R – Not recommended. The voltage rating does not meet the minimum operating limits.
(6) The voltage rating of this capacitor only allows it to be used for output voltage that is equal to or less than 80% of the working voltage.

Copyright © 2005–2009, Texas Instruments Incorporated

Table 3. Input/Output Capacitors (continued)

Capacitor Vendor, Type Series (Style)	Capacitor Characteristics					Quantity			
	Working Voltage	Value (µF)	Max. ESR at 100 kHz	Max Ripple Current at 85°C (Irms)	Physical Size (mm)	Input Bus	Output Bus: No Turbo-Trans	Output Bus: Turbo-Trans Cap Type(2)	Vendor Part No.
Nichicon, Aluminum									
PM (Radial)	25 V	1000	43mΩ	1520mA	18 × 15	1	≥ 2(7)	N/R(8)	UPM1E102MHH6
HD (Radial)	35 V	470	23mΩ	1820mA	10 × 20	1	≥ 2(7)	N/R(8)	UHD1V471HR
Panasonic, Poly-Aluminum	2.0 V	390	5mΩ	4000mA	7,3×4,3×4,2	N/R(9)	N/R(9)	B ≥ 2(10)	EEFSE0J391R(V_O≤ 1.6V)(11)
Sanyo									
TPE, Poscap (SMD)	10 V	330	25mΩ	3300mA	7,3×4,3	N/R(9)	1 ~ 3	C ≥ 1(10)	10TPE330MF(11)
TPE, Poscap (SMD)	2.5 V	470	7mΩ	4400mA	7,3×4,3	N/R(9)	1 ~ 2	B ≥ 2(10)	2R5TPE470M7(V_O≤ 1.8V)(11)
TPD, Poscap (SMD)	2.5 V	1000	5mΩ	6100mA	7,3×4,3	N/R(9)	1	B ≥ 1(10)	2R5TPD1000M5(V_O≤ 1.8V)(11)
SEP, OS-CON (Radial)	16 V	330	16mΩ	4700mA	10 × 13	1	1 ~ 2	B ≥ 1(10)	16SEP330M
SEPC, OS-CON (Radial)	16 V	470	10mΩ	6100mA	10 × 13	1	1 ~ 2	B ≥ 2(10)	16SEPC470M
SVP, OS-CON (SMD)	16 V	330	16mΩ	4700mA	10 × 12,6	1	1 ~ 2(7)	B ≥ 1(10)(7)	16SVP330M
AVX, Tantalum									
TPM Multianode	10 V	330	23mΩ	3000mA	7,3×4,3×4,1	N/R(9)	1 ~ 3(7)	C ≥ 2(10)	TPME337M010R0035
TPS Series III (SMD)	10 V	330	40mΩ	1830mA	7,3×4,3×4,1	N/R(9)	1 ~ 6(7)	N/R(8)	TPSE337M010R0040 (V_O≤ 5V)(12)
TPS Series III (SMD)	4 V	1000	25mΩ	2400mA	7,3×6,1×3.5	N/R(9)	1 ~ 5(7)	N/R(8)	TPSV108K004R0035 (V_O≤ 2.1V)(12)
Kemet, Poly-Tantalum									
T520 (SMD)	10 V	330	25mΩ	2600mA	7,3×4,3×4,1	N/R(9)	1 ~ 3(7)	C ≥ 2(10)	T520X337M010ASE025(11)
T530 (SMD)	6.3 V	330	15mΩ	3800mA	7,3×4,3×4,1	N/R(9)	2 ~ 3	B ≥ 2(10)	T530X337M010ASE015(11)
T530 (SMD)	4 V	680	5mΩ	7300mA	7,3×4,3×4,1	N/R(9)	1	B ≥ 1(10)	T530X687M004ASE005 (V_O≤ 3.5V)(11)
T530 (SMD)	2.5 V	1000	5mΩ	7300mA	7,3×4,3×4,1	N/R(9)	1	B ≥ 1(10)	T530X108M2R5ASE005 (V_O≤ 2.0V)(11)
Vishay-Sprague									
597D, Tantalum (SMD)	10 V	330	35mΩ	2500mA	7,3×5,7×4,1	N/R(9)	1 ~ 5	N/R(8)	597D337X010E2T
94SA, OS-CON (Radial)	16 V	470	20mΩ	6080mA	12 × 22	1	1 ~ 3	C ≥ 2(10)	94SA477X0016GBP
94SVP OS-CON(SMD)	16 V	330	17mΩ	4500mA	10 × 12,7	2	2 ~ 3	C ≥ 1(10)	94SVP337X06F12
Kemet, Ceramic X5R	16 V	10	2mΩ	–	3225	1	≥ 1(13)	A(10)	C1210C106M4PAC
(SMD)	6.3 V	47	2mΩ			N/R(9)	≥ 1(13)	A(10)	C1210C476K9PAC
Murata, Ceramic X5R	6.3 V	100	2mΩ	–	3225	N/R(9)	≥ 1(13)	A(10)	GRM32ER60J107M
(SMD)	6.3 V	47				N/R(9)	≥ 1(13)	A(10)	GRM32ER60J476M
	25 V	22				1	≥ 1(13)	A(10)	GRM32ER61E226K
	16 V	10				1	≥ 1(13)	A(10)	GRM32DR61C106K
TDK, Ceramic X5R	6.3 V	100	2mΩ	–	3225	N/R(9)	≥ 1(13)	A(10)	C3225X5R0J107MT
(SMD)	6.3 V	47				N/R(9)	≥ 1(13)	A(10)	C3225X5R0J476MT
	16 V	10				1	≥ 1(13)	A(10)	C3225X5R1C106MT0
	16 V	22				1	≥ 1(13)	A(10)	C3225X5R1C226MT

(7) Total bulk nonceramic capacitors on the output bus with ESR ≥ 15mΩ to ≤ 30mΩ requires an additional 200 µF of ceramic capacitance.
(8) Aluminum Electrolytic capacitor not recommended for the TurboTrans due to higher ESR × capacitance products. Aluminum and higher ESR capacitors can be used in conjunction with lower ESR capacitance.
(9) N/R – Not recommended. The voltage rating does not meet the minimum operating limits.
(10) Required capacitors with TurboTrans. See the TurboTrans Application information for Capacitor Selection
Capacitor Types:
a. Type A = (100 < capacitance × ESR ≤ 1000)
b. Type B = (1,000 < capacitance × ESR ≤ 5,000)
c. Type C = (5,000 < capacitance × ESR ≤ 10,000)
(11) The voltage rating of this capacitor only allows it to be used for output voltage that is equal to or less than 80% of the working voltage.
(12) The voltage rating of this capacitor only allows it to be used for output voltage that is equal to or less than 50% of the working voltage.
(13) Any combination of ceramic capacitor values is limited to 500 µF for PTH08T220W and 5000 µF for PTH08T221W. The total capacitance for PTH08T220W is limited to 10,000 µF which includes all ceramic and non-ceramic types.

Copyright © 2005–2009, Texas Instruments Incorporated

TurboTrans™ Technology

TurboTrans technology is a feature introduced in the T2 generation of the PTH/PTV family of power modules. TurboTrans optimizes the transient response of the regulator with added external capacitance using a single external resistor. Benefits of this technology include reduced output capacitance, minimized output voltage deviation following a load transient, and enhanced stability when using ultra-low ESR output capacitors. The amount of output capacitance required to meet a target output voltage deviation will be reduced with TurboTrans activated. Likewise, for a given amount of output capacitance, with TurboTrans engaged, the amplitude of the voltage deviation following a load transient will be reduced. Applications requiring tight transient voltage tolerances and minimized capacitor footprint area will benefit greatly from this technology.

TurboTrans™ Selection

Utilizing TurboTrans requires connecting a resistor, R_{TT}, between the +Sense pin (pin6) and the TurboTrans pin (pin9). The value of the resistor directly corresponds to the amount of output capacitance required. All T2 products require a minimum value of output capacitance whether or not TurboTrans is utilized. For the PTH08T220W, the minimum required capacitance is 220µF. The minimum required capacitance for the PTH08T221W is 300µF of ceramic type. When using TurboTrans, capacitors with a capacitance × ESR product below 10,000 µF×mΩ are required. (Multiply the capacitance (in µF) by the ESR (in mΩ) to determine the capacitance × ESR product.) See the Capacitor Selection section of the datasheet for a variety of capacitors that meet this criteria.

Figure 13 thru Figure 18 show the amount of output capacitance required to meet a desired transient voltage deviation with and without TurboTrans for several capacitor types; TypeA (e.g. ceramic), TypeB (e.g. polymer-tantalum), and TypeC (e.g. OS-CON). To calculate the proper value of R_{TT}, first determine your required transient voltage deviation limits and magnitude of your transient load step. Next, determine what type of output capacitors will be used. (If more than one type of output capacitor is used, select the capacitor type that makes up the majority of your total output capacitance.) Knowing this information, use the chart in Figure 13 thru Figure 18 that corresponds to the capacitor type selected. To use the chart, begin by dividing the maximum voltage deviation limit (in mV) by the magnitude of your load step (in Amps). This gives a mV/A value. Find this value on the Y-axis of the appropriate chart. Read across the graph to the *'With TurboTrans*' plot. From this point, read down to the X-axis which lists the minimum required capacitance, C_O, to meet that transient voltage deviation. The required R_{TT} resistor value can then be calculated using the equation or selected from the TurboTrans table. The TurboTrans tables include both the required output capacitance and the corresponding R_{TT} values to meet several values of transient voltage deviation for 25%(4A), 50%(8A), and 75%(12A) output load steps.

The chart can also be used to determine the achievable transient voltage deviation for a given amount of output capacitance. Selecting the amount of output capacitance along the X-axis, reading up to the *'With TurboTrans'* curve, and then over to the Y-axis, gives the transient voltage deviation limit for that value of output capacitance. The required R_{TT} resistor value can be calculated using the equation or selected from the TurboTrans table.

As an example, let's look at a 12-V application requiring a 40 mV deviation during an 8A, 50% load transient. A majority of 330µF, 10mΩ ouput capacitors will be used. Use the 12 V, Type B capacitor chart, Figure 15. Dividing 40mV by 8A gives 5mV/A transient voltage deviation per amp of transient load step. Select 5mV/A on the Y-axis and read across to the *'With TurboTrans*' plot. Following this point down to the X-axis gives us a minimum required output capacitance of approximately 800µF. The required R_{TT} resistor value for 800µF can then be calculated or selected from Table 5. The required R_{TT} resistor is approximately 4.12kΩ.

To see the benefit of TurboTrans, follow the 5mV/A marking across to the *'Without TurboTrans*' plot. Following that point down shows that you would need a minimum of 4500µF of output capacitance to meet the same transient deviation limit. This is the benefit of TurboTrans. A typical TurboTrans schematic and waveforms are shown in Figure 19 and Figure 20.

Copyright © 2005–2009, Texas Instruments Incorporated

PTH08T221W Type A / Ceramic Capacitors

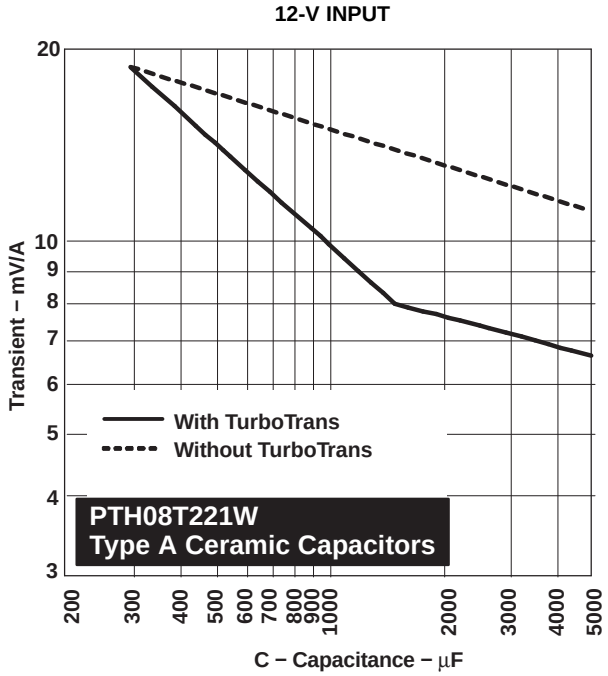

Figure 13. Capacitor Type A,
100 ≤ C(µF)×ESR(mΩ) ≤ 1000 (e.g. Ceramic)

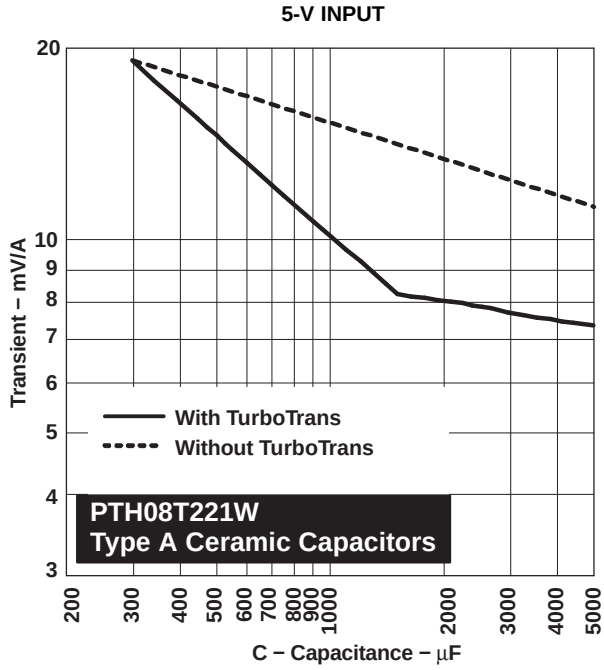

Figure 14. Capacitor Type A,
100 ≤ C(µF)×ESR(mΩ) ≤ 1000 (e.g. Ceramic)

Table 4. Type A TurboTrans C_O Values and Required R_{TT} Selection Table

Transient Voltage Deviation (mV)			12 Volt Input		5 Volt Input	
25% load step (4 A)	50% load step (8 A)	75% load step (12 A)	C_O Minimum Required Output Capacitance (µF)	R_{TT} Required TurboTrans Resistor (kΩ)	C_O Minimum Required Output Capacitance (µF)	R_{TT} Required TurboTrans Resistor (kΩ)
75	150	225	300	open	300	open
65	130	195	420	78.7	430	68.1
55	110	165	530	33.2	550	30.9
50	100	150	700	15.4	730	13.7
45	90	135	835	10.0	870	8.87
40	80	120	1000	5.76	1050	4.87
35	70	105	1250	2.10	1300	1.62
30	60	90	1730	short	4200	short

R_{TT} Resistor Selection

The TurboTrans resistor value, R_{TT} can be determined from the TurboTrans programming Equation 2.

$$R_{TT} = 40 \times \frac{\left[1 - \left(C_O/1500\right)\right]}{\left[\left(5 \times C_O/1500\right) - 1\right]} \quad (k\Omega) \tag{2}$$

Where C_O is the total output capacitance in µF. C_O values greater than or equal to 1500 µF require R_{TT} to be a short, 0Ω.

To ensure stability, a minimum amount of output capacitance is required for a given R_{TT} resistor value. The value of R_{TT} must be calculated using the minimum required output capacitance determined from Figure 13 and Figure 14.

Copyright © 2005–2009, Texas Instruments Incorporated

PTH08T220W Type B Capacitors

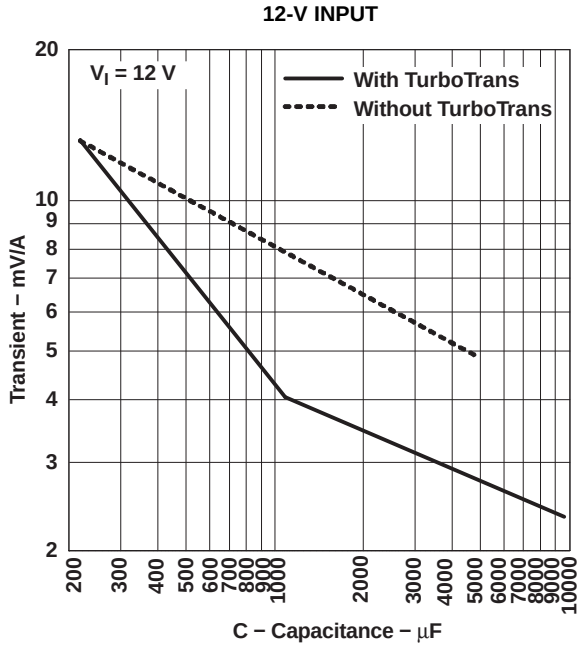

Figure 15. Capacitor Type B,
1000 < C(µF)×ESR(mΩ) ≤ 5000 (e.g. Polymer-Tantalum)

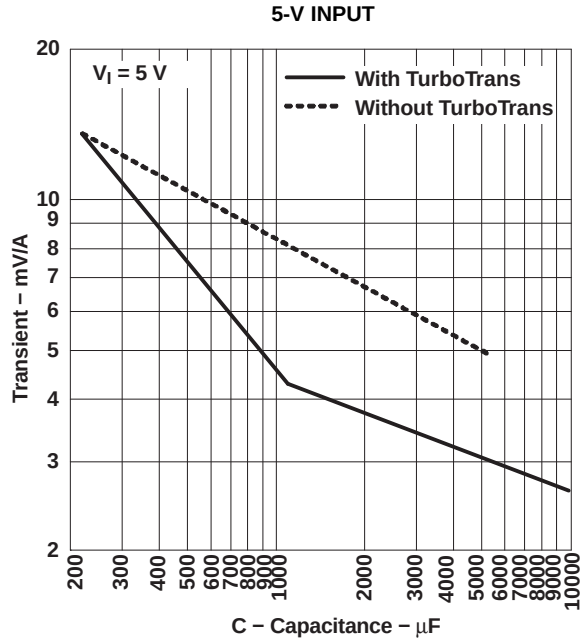

Figure 16. Capacitor Type B,
1000 < C(µF)×ESR(mΩ) ≤ 5000 (e.g. Polymer-Tantalum)

Table 5. Type B TurboTrans C_O Values and Required R_{TT} Selection Table

Transient Voltage Deviation (mV)			12 Volt Input		5 Volt Input	
25% load step (4 A)	50% load step (8 A)	75% load step (12 A)	C_O Minimum Required Output Capacitance (µF)	R_{TT} Required TurboTrans Resistor (kΩ)	C_O Minimum Required Output Capacitance (µF)	R_{TT} Required TurboTrans Resistor (kΩ)
65	125	190	220	open	220	open
50	100	150	270	132	270	132
40	80	120	330	56	330	56
30	60	90	470	20.5	500	17.4
25	50	75	600	10.5	650	8.25
20	40	60	800	4.12	900	2.32
15	30	45	1500	short	1700	short
10	20	30	7000	short	10000	short

R_{TT} Resistor Selection

The TurboTrans resistor value, R_{TT} can be determined from the TurboTrans programming Equation 3.

$$R_{TT} = 40 \times \frac{\left[1 - \left(C_O/1100\right)\right]}{\left[\left(5 \times C_O/1100\right) - 1\right]} \quad (k\Omega) \tag{3}$$

Where C_O is the total output capacitance in µF. C_O values greater than or equal to 1100 µF require R_{TT} to be a short, 0Ω. (Equation 3 results in a negative value for R_{TT} when C_O > 1100 µF.)

To ensure stability, a minimum amount of output capacitance is required for a given R_{TT} resistor value. The value of R_{TT} must be calculated using the minimum required output capacitance determined from Figure 15 and Figure 16.

PTH08T220W Type C Capacitors

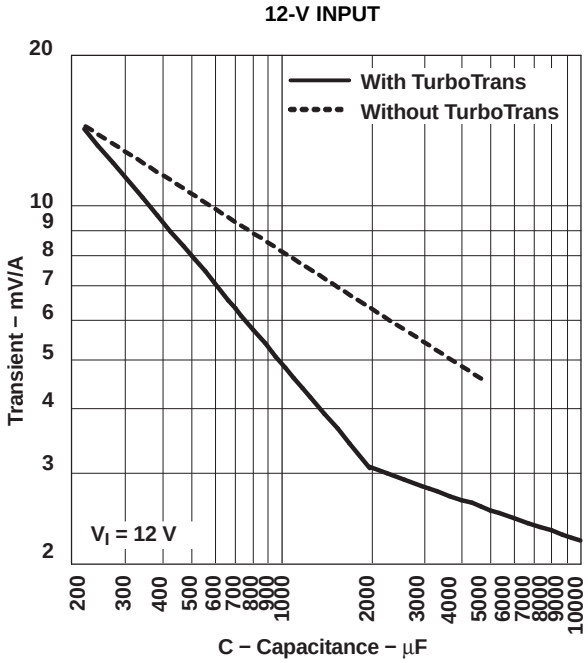

Figure 17. Capacitor Type C,
5000 < C(µF)×ESR(mΩ) ≤ 10,000(e.g. OS-CON)

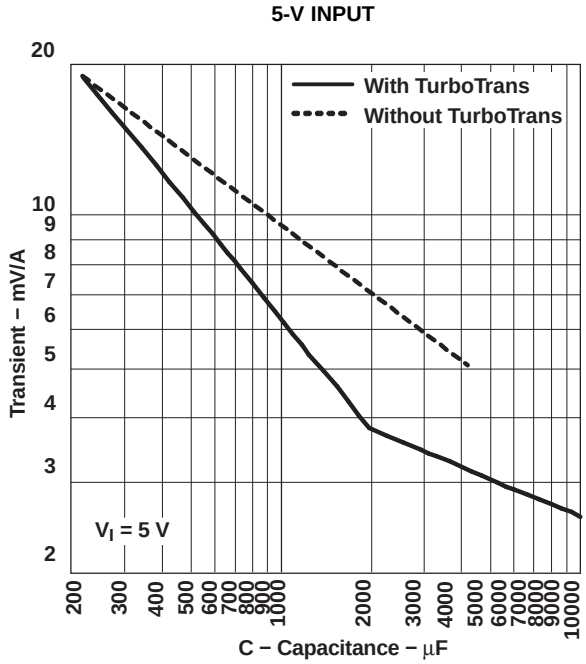

Figure 18. Capacitor Type C,
5000 < C(µF)×ESR(mΩ) ≤ 10,000(e.g. OS-CON)

Table 6. Type C TurboTrans C_O Values and Required R_{TT} Selection Table

Transient Voltage Deviation (mV)			12 Volt Input		5 Volt Input	
25% Load Step (4 A)	50% Load Step (8 A)	75% Load Step (12 A)	C_O Minimum Required Output Capacitance (µF)	R_{TT} Required TurboTrans Resistor (kΩ)	C_O Minimum Required Output Capacitance (µF)	R_{TT} Required TurboTrans Resistor (kΩ)
65	125	190	220	open	220	open
50	100	150	270	274	330	121
40	80	120	330	121	550	34.8
30	60	90	470	48.7	630	26.1
25	50	75	600	28.7	800	16.2
20	40	60	800	16.2	1150	7.15
15	30	45	1300	5.11	1700	1.50
10	20	30	7500	short	10000	short

R_{TT} Resistor Selection

For V_O ≤ 3.45V the TurboTrans resistor value, R_{TT} can be determined from the TurboTrans programming Equation 4. For V_O > 3.45 V please contact TI for C_O and R_{TT} values.

$$R_{TT} = 40 \times \frac{\left[1 - \left(C_O/1980\right)\right]}{\left(\frac{(5 \times C_O) + 880}{1980}\right) - 1} \quad (k\Omega) \tag{4}$$

Where C_O is the total output capacitance in µF. C_O values greater than or equal to 1980 µF require R_{TT} to be a short, 0Ω. (Equation 4 results in a negative value for R_{TT} when C_O > 1980 µF). To ensure stability, a minimum amount of output capacitance is required for a given R_{TT} resistor value. The value of R_{TT} must be calculated using the minimum required output capacitance determined from Figure 17 and Figure 18.

Copyright © 2005–2009, Texas Instruments Incorporated

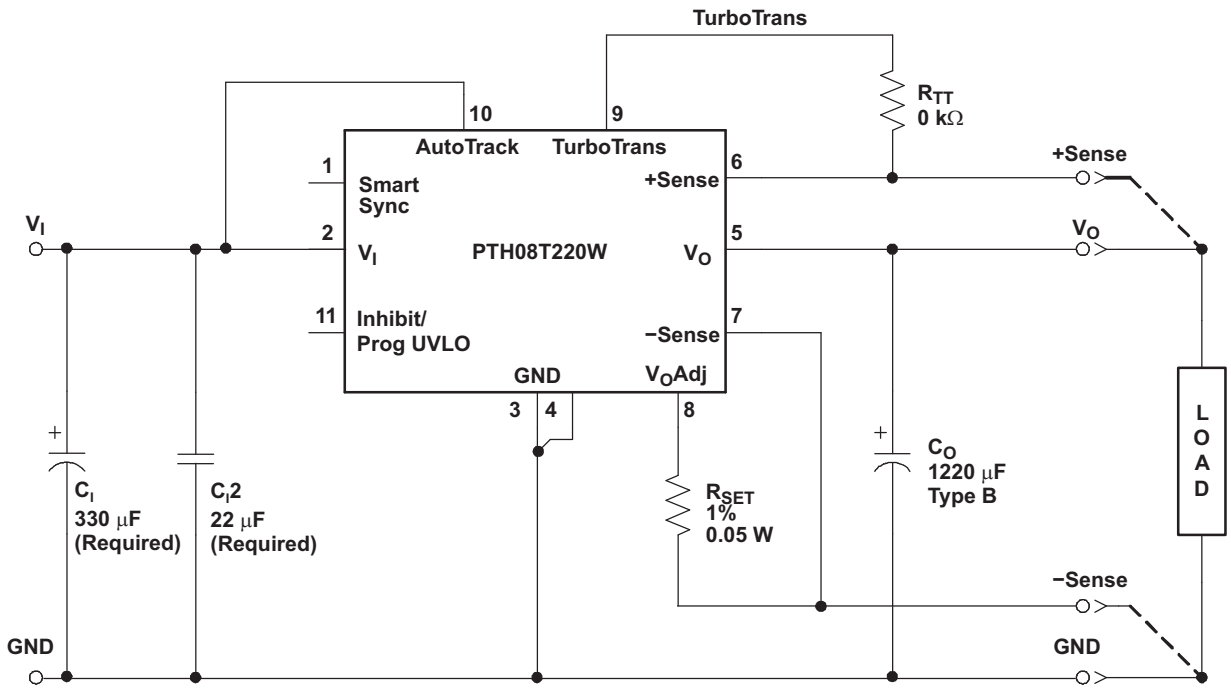

Figure 19. Typical TurboTrans™ Application

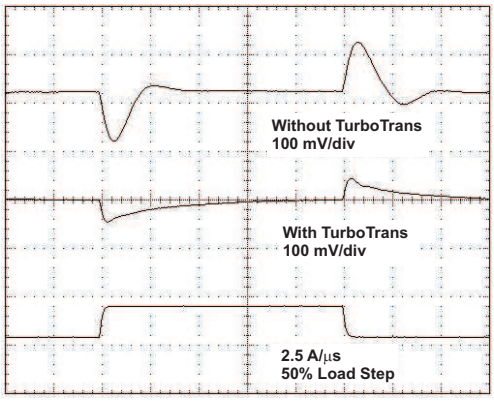

Figure 20. TurboTrans Waveform

ADJUSTING THE UNDERVOLTAGE LOCKOUT (UVLO)

The PTH08T220/221W power modules incorporate an input undervoltage lockout (UVLO). The UVLO feature prevents the operation of the module until there is sufficient input voltage to produce a valid output voltage. This enables the module to provide a clean, monotonic powerup for the load circuit, and also limits the magnitude of current drawn from the regulator's input source during the power-up sequence.

The UVLO characteristic is defined by the ON threshold (V_{THD}) voltage. Below the *ON* threshold, the Inhibit control is overridden, and the module does not produce an output. The hysteresis voltage, which is the difference between the *ON* and *OFF* threshold voltages, is set at 500 mV. The hysteresis prevents start-up oscillations, which can occur if the input voltage droops slightly when the module begins drawing current from the input source.

The UVLO feature of the PTH08T220/221W module allows for limited adjustment of the *ON* threshold voltage. The adjustment is made via the *Inhbit/UVLO Prog* control pin (pin 11) using a single resistor (see Figure 21). When pin 11 is left open circuit, the *ON* threshold voltage is internally set to its default value, which is 4.3 volts. The *ON* threshold might need to be raised if the module is powered from a tightly regulated 12-V bus. Adjusting the threshold prevents the module from operating if the input bus fails to completely rise to its specified regulation voltage.

Equation 5 determines the value of R_{UVLO} required to adjust V_{THD} to a new value. The default value is 4.3 V, and it may only be adjusted to a higher value.

$$R_{UVLO} = \frac{9690 - \left(137 \times V_I\right)}{\left(137 \times V_I\right) - 585} \ (k\Omega) \tag{5}$$

Table 7 lists the standard resistor values for R_{UVLO} for different values of the on-threshold (V_{THD}) voltage.

Table 7. Standard R_{UVLO} values for Various V_{THD} values

V_{THD}	5.0 V	5.5 V	6.0 V	6.5 V	7.0 V	7.5 V	8.0 V	8.5 V	9.0 V	9.5 V	10.0 V	10.5 V	11.0 V
R_{UVLO}	88.7 kΩ	52.3 kΩ	37.4 kΩ	28.7 kΩ	23.2 kΩ	19.6 kΩ	16.9 kΩ	14.7 kΩ	13.0 kΩ	11.8 kΩ	10.5 kΩ	9.76 kΩ	8.87 kΩ

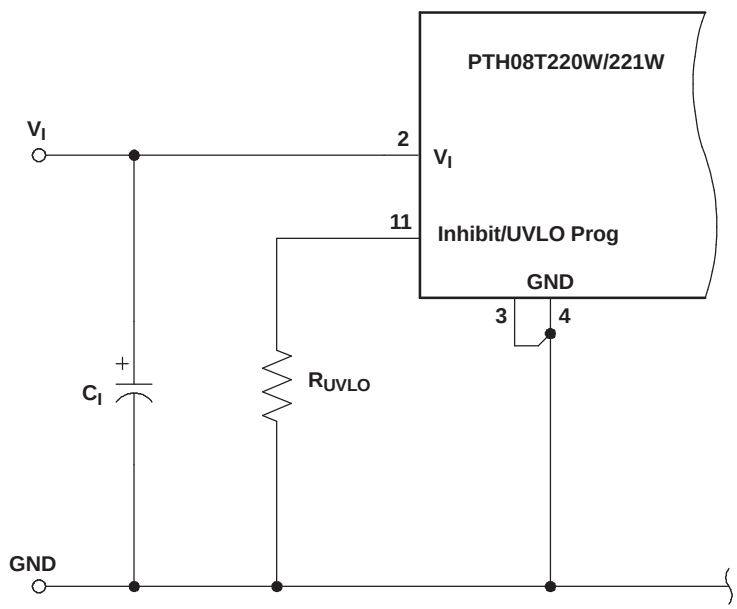

Figure 21. Undervoltage Lockout Adjustment Resistor Placement

Copyright © 2005–2009, Texas Instruments Incorporated

Soft-Start Power Up

The Auto-Track feature allows the power-up of multiple PTH/PTV modules to be directly controlled from the Track pin. However in a stand-alone configuration, or when the Auto-Track feature is not being used, the Track pin should be directly connected to the input voltage, V_I (see Figure 22).

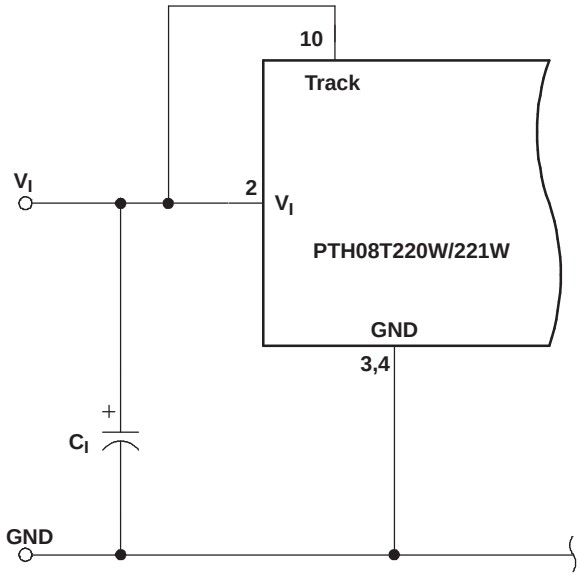

Figure 22. Defeating the Auto-Track Function

When the Track pin is connected to the input voltage the Auto-Track function is permanently disengaged. This allows the module to power up entirely under the control of its internal soft-start circuitry. When power up is under soft-start control, the output voltage rises to the set-point at a quicker and more linear rate.

From the moment a valid input voltage is applied, the soft-start control introduces a short time delay (typically 2 ms–10 ms) before allowing the output voltage to rise.

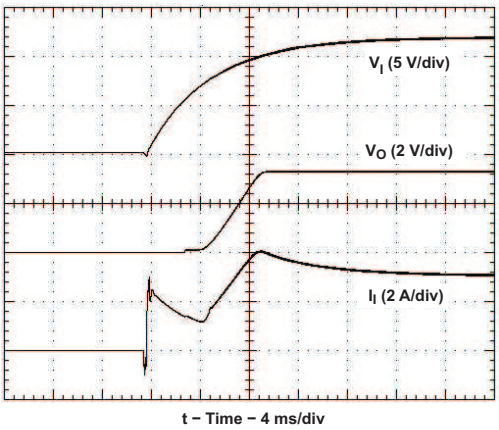

Figure 23. Power-Up Waveform

The output then progressively rises to the module's setpoint voltage. Figure 23 shows the soft-start power-up characteristic of the PTH08T220/221W operating from a 12-V input bus and configured for a 3.3-V output. The waveforms were measured with a 10-A constant current load and the Auto-Track feature disabled. The initial rise in input current when the input voltage first starts to rise is the charge current drawn by the input capacitors. Power-up is complete within 15 ms.

Copyright © 2005–2009, Texas Instruments Incorporated

On/Off Inhibit

For applications requiring output voltage on/off control, the PTH08T220/221W incorporates an Inhibit control pin. The inhibit feature can be used wherever there is a requirement for the output voltage from the regulator to be turned off.

The power modules function normally when the Inhibit pin is left open-circuit, providing a regulated output whenever a valid source voltage is connected to V_I with respect to GND.

Figure 24 shows the typical application of the inhibit function. Note the discrete transistor (Q1). The Inhibit input has its own internal pull-up. An external pull-up resistor should never be used with the inhibit pin. The input is not compatible with TTL logic devices. An open-collector (or open-drain) discrete transistor is recommended for control.

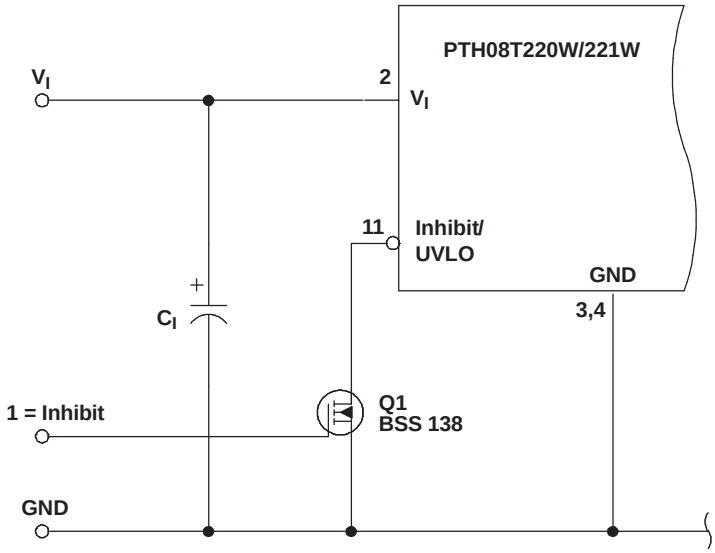

Figure 24. On/Off Inhibit Control Circuit

Turning Q1 on applies a low voltage to the Inhibit control pin and disables the output of the module. If Q1 is then turned off, the module executes a soft-start power-up sequence. A regulated output voltage is produced within 15 ms. Figure 25 shows the typical rise in both the output voltage and input current, following the turn-off of Q1. The turn off of Q1 corresponds to the rise in the waveform, V_{INH}. The waveforms were measured with a 10-A constant current load.

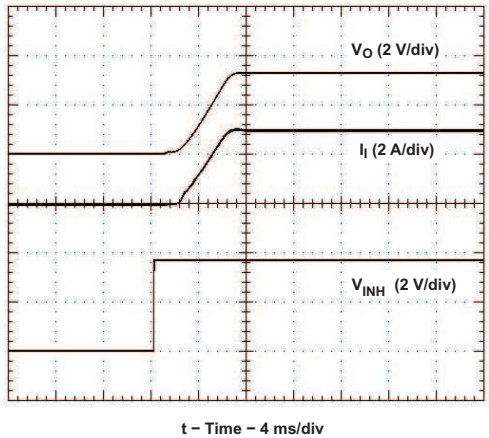

Figure 25. Power-Up Response from Inhibit Control

Copyright © 2005–2009, Texas Instruments Incorporated

Overcurrent Protection

For protection against load faults, all modules incorporate output overcurrent protection. Applying a load that exceeds the regulator's overcurrent threshold causes the regulated output to shut down. Following shutdown, the module periodically attempts to recover by initiating a soft-start power-up. This is described as a *hiccup* mode of operation, whereby the module continues in a cycle of successive shutdown and power up until the load fault is removed. During this period, the average current flowing into the fault is significantly reduced. Once the fault is removed, the module automatically recovers and returns to normal operation.

Overtemperature Protection (OTP)

A thermal shutdown mechanism protects the module's internal circuitry against excessively high temperatures. A rise in the internal temperature may be the result of a drop in airflow, or a high ambient temperature. If the internal temperature exceeds the OTP threshold, the module's Inhibit control is internally pulled low. This turns the output off. The output voltage drops as the external output capacitors are discharged by the load circuit. The recovery is automatic, and begins with a soft-start power up. It occurs when the sensed temperature decreases by about 10°C below the trip point.

The overtemperature protection is a last resort mechanism to prevent thermal stress to the regulator. Operation at or close to the thermal shutdown temperature is not recommended and reduces the long-term reliability of the module. Always operate the regulator within the specified safe operating area (SOA) limits for the worst-case conditions of ambient temperature and airflow.

Differential Output Voltage Remote Sense

Differential remote sense improves the load regulation performance of the module by allowing it to compensate for any IR voltage drop between its output and the load in either the positive or return path. An IR drop is caused by the output current flowing through the small amount of pin and trace resistance. With the sense pins connected, the difference between the voltage measured directly between the V_O and GND pins, and that measured at the Sense pins, is the amount of IR drop being compensated by the regulator. This should be limited to a maximum of 0.3V. Connecting the +Sense (pin 6) to the positive load terminal improves the load regulation at the connection point. For optimal behavior the –Sense (pin 7) must be connected to GND (pin 4) close to the module (within 10 cm).

If the remote sense feature is not used at the load, connect the +Sense pin to V_O (pin5) and connect the –Sense pin to the module GND (pin 4).

The remote sense feature is not designed to compensate for the forward drop of nonlinear or frequency dependent components that may be placed in series with the converter output. Examples include OR-ing diodes, filter inductors, ferrite beads, and fuses. When these components are enclosed by the remote sense connection they are effectively placed inside the regulation control loop, which can adversely affect the stability of the regulator.

Copyright © 2005–2009, Texas Instruments Incorporated

Smart Sync

Smart Sync is a feature that allows multiple power modules to be synchronized to a common frequency. Driving the Smart Sync pins with an external oscillator set to the desired frequency, synchronizes all connected modules to the selected frequency. The synchronization frequency can be higher or lower than the nominal switching frequency of the modules within the range of 240 kHz to 400 kHz. Synchronizing modules powered from the same bus eliminates beat frequencies reflected back to the input supply, and also reduces EMI filtering requirements. Eliminating the low beat frequencies (usually<10kHz) allows the EMI filter to be designed to attenuate only the synchronization frequency. Power modules can also be synchronized out of phase to minimize ripple current and reduce input capacitance requirements. Figure 26 shows a standard circuit with two modules syncronized 180° out of phase using a D flip-flop.

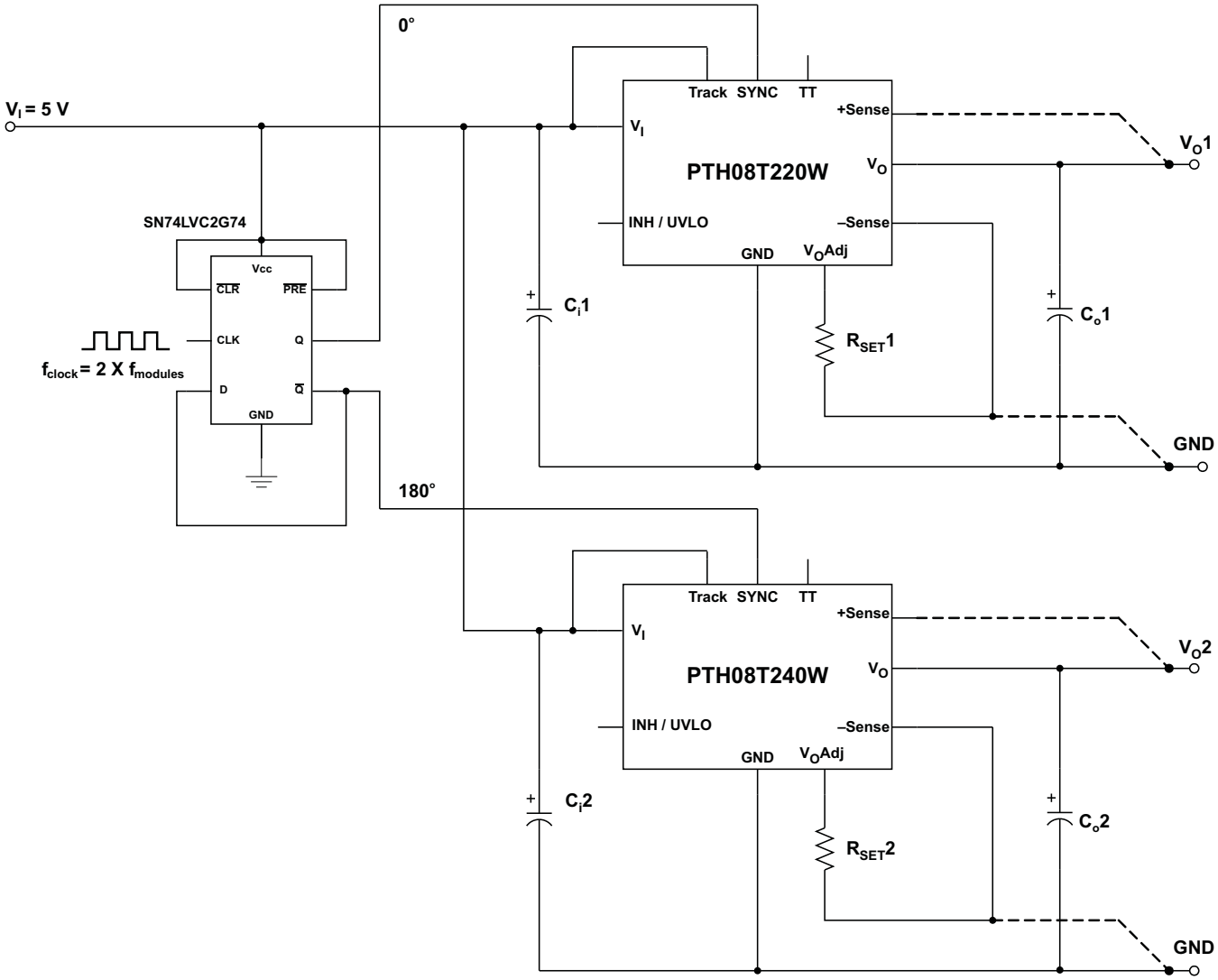

Figure 26. Smart Sync Schematic

Copyright © 2005–2009, Texas Instruments Incorporated

Smart Sync Considerations

Operating the PTH08T220W with a low duty cycle may increase the output voltage ripple due to pulse skipping of the PWM controller. When operating at the nominal switching frequency, input voltages greater than (V_O × 11) may cause the output voltage ripple to increase (typically 2×).

Synchronizing to a higher frequency and operating with a low duty cycle may impact output voltage ripple. When operating at 300 kHz, Figure 27 shows the operating region where the output voltage ripple meets the electrical specifications and the operating region where the output voltage ripple may increase. Figure 28 shows the operating regions for several switching frequencies. For example, a module operating at 400 kHz and an output voltage of 1.2 V, the maximum input voltage that meets the output voltage ripple specification is 10 V. Exceeding 10 V may cause in an increase in output voltage ripple. As shown in Figure 28, operating below 6V allows operation down to the minimum output voltage over the entire synchronization frequency range without affecting the output voltage ripple. See the *Electrical Characteristics* table for the synchronization frequency range limits.

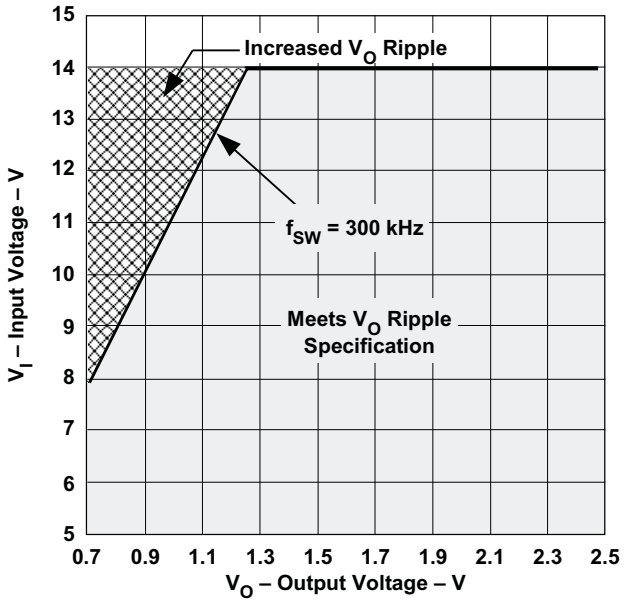

Figure 27. V_O Ripple Regions at 300 kHz(1) (2)

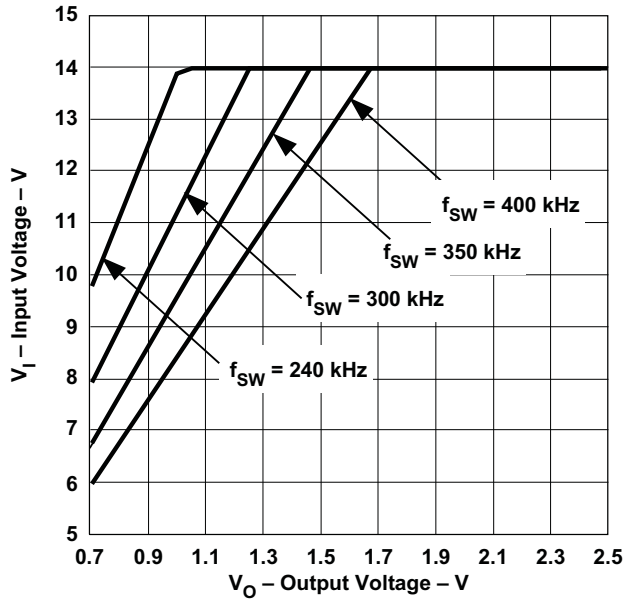

Figure 28. V_O Ripple Regions(1) (2)

(1) When operating at the nominal switching frequency refer to the 300 kHz plot.
(2) Operation above a given curve may cause the output voltage ripple to increase (typically 2×).

Auto-Track™ Function

The Auto-Track function is unique to the PTH/PTV family, and is available with all POLA products. Auto-Track was designed to simplify the amount of circuitry required to make the output voltage from each module power up and power down in sequence. The sequencing of two or more supply voltages during power up is a common requirement for complex mixed-signal applications that use dual-voltage VLSI ICs such as the TMS320™ DSP family, microprocessors, and ASICs.

How Auto-Track™ Works

Auto-Track works by forcing the module output voltage to follow a voltage presented at the *Track* control pin (1). This control range is limited to between 0 V and the module set-point voltage. Once the track-pin voltage is raised above the set-point voltage, the module output remains at its set-point (2). As an example, if the *Track* pin of a 2.5-V regulator is at 1 V, the regulated output is 1 V. If the voltage at the *Track* pin rises to 3 V, the regulated output does not go higher than 2.5 V.

When under Auto-Track control, the regulated output from the module follows the voltage at its *Track* pin on a

Copyright © 2005–2009, Texas Instruments Incorporated

volt-for-volt basis. By connecting the *Track* pin of a number of these modules together, the output voltages follow a common signal during power up and power down. The control signal can be an externally generated master ramp waveform, or the output voltage from another power supply circuit [(3)]. For convenience, the *Track* input incorporates an internal RC-charge circuit. This operates off the module input voltage to produce a suitable rising waveform at power up.

Typical Application

The basic implementation of Auto-Track allows for simultaneous voltage sequencing of a number of Auto-Track compliant modules. Connecting the *Track* inputs of two or more modules forces their track input to follow the same collective RC-ramp waveform, and allows their power-up sequence to be coordinated from a common Track control signal. This can be an open-collector (or open-drain) device, such as a power-up reset voltage supervisor IC. See U3 in Figure 29.

To coordinate a power-up sequence, the Track control must first be pulled to ground potential. This should be done at or before input power is applied to the modules. The ground signal should be maintained for at least 20 ms after input power has been applied. This brief period gives the modules time to complete their internal soft-start initialization [(4)], enabling them to produce an output voltage. A low-cost supply voltage supervisor IC, that includes a built-in time delay, is an ideal component for automatically controlling the Track inputs at power up.

Figure 29 shows how the TL7712A supply voltage supervisor IC (U3) can be used to coordinate the sequenced power up of PTH08T220/221W modules. The output of the TL7712A supervisor becomes active above an input voltage of 3.6 V, enabling it to assert a ground signal to the common track control well before the input voltage has reached the module's undervoltage lockout threshold. The ground signal is maintained until approximately 28 ms after the input voltage has risen above U3's voltage threshold, which is 4.3 V. The 28-ms time period is controlled by the capacitor C_T. The value of 2.2 µF provides sufficient time delay for the modules to complete their internal soft-start initialization. The output voltage of each module remains at zero until the track control voltage is allowed to rise. When U3 removes the ground signal, the track control voltage automatically rises. This causes the output voltage of each module to rise simultaneously with the other modules, until each reaches its respective set-point voltage.

Figure 30 shows the output voltage waveforms after input voltage is applied to the circuit. The waveforms, V_O1 and V_O2, represent the output voltages from the two power modules, U1 (3.3 V) and U2 (1.8 V), respectively. V_{TRK}, V_O1, and V_O2 are shown rising together to produce the desired simultaneous power-up characteristic.

The same circuit also provides a power-down sequence. When the input voltage falls below U3's voltage threshold, the ground signal is re-applied to the common track control. This pulls the track inputs to zero volts, forcing the output of each module to follow, as shown in Figure 31. Power down is normally complete before the input voltage has fallen below the modules' undervoltage lockout. This is an important constraint. Once the modules recognize that an input voltage is no longer present, their outputs can no longer follow the voltage applied at their track input. During a power-down sequence, the fall in the output voltage from the modules is limited by the Auto-Track slew rate capability.

Notes on Use of Auto-Track™

1. The *Track* pin voltage must be allowed to rise above the module set-point voltage before the module regulates at its adjusted set-point voltage.
2. The Auto-Track function tracks almost any voltage ramp during power up, and is compatible with ramp speeds of up to 1 V/ms.
3. The absolute maximum voltage that may be applied to the *Track* pin is the input voltage V_I.
4. The module cannot follow a voltage at its track control input until it has completed its soft-start initialization. This takes about 20 ms from the time that a valid voltage has been applied to its input. During this period, it is recommended that the *Track* pin be held at ground potential.
5. The Auto-Track function is disabled by connecting the *Track* pin to the input voltage (V_I). When Auto-Track is disabled, the output voltage rises according to its softstart rate after input power has been applied.
6. The Auto-Track pin should never be used to regulate the module's output voltage for long-term, steady-state operation.

Copyright © 2005–2009, Texas Instruments Incorporated

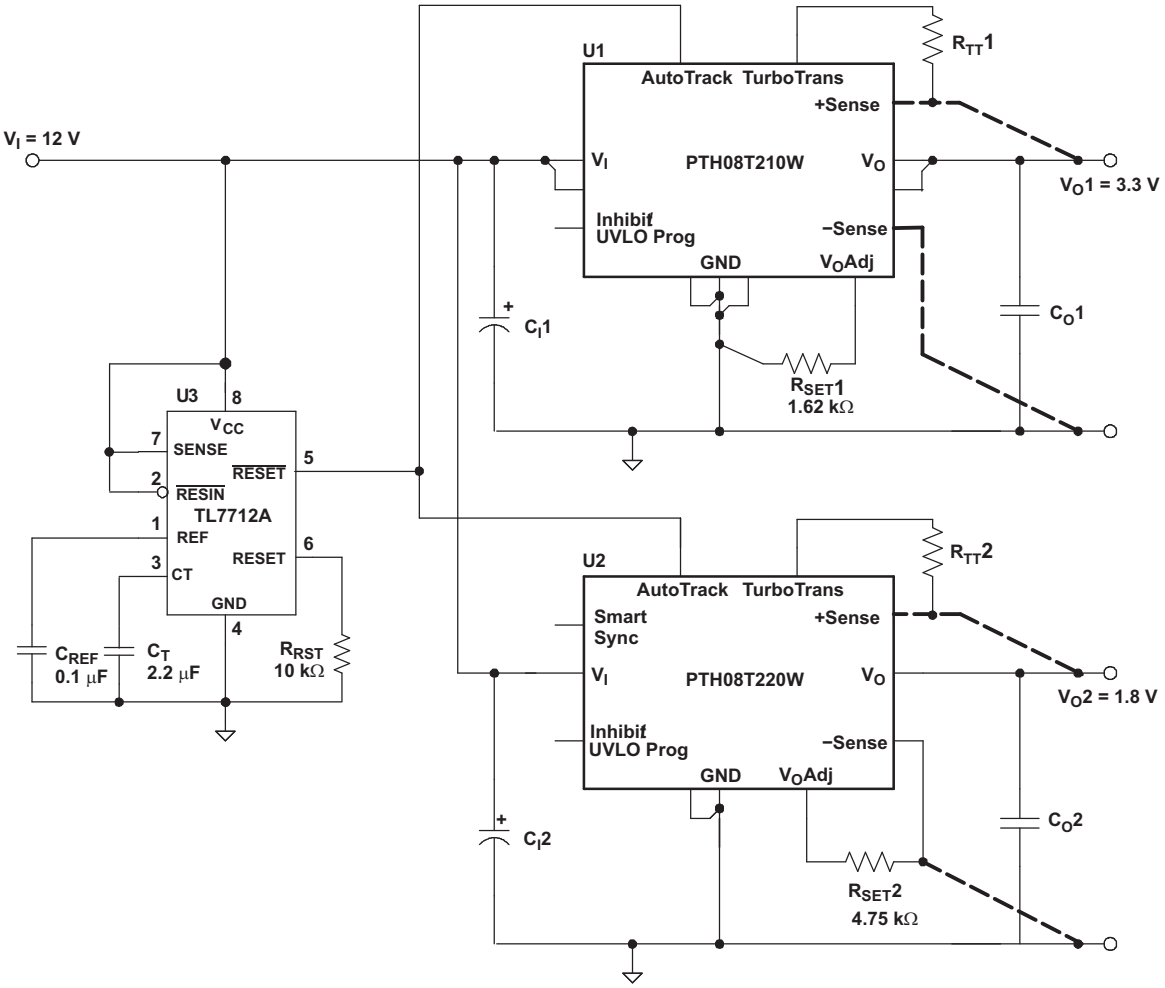

Figure 29. Sequenced Power Up and Power Down Using Auto-Track

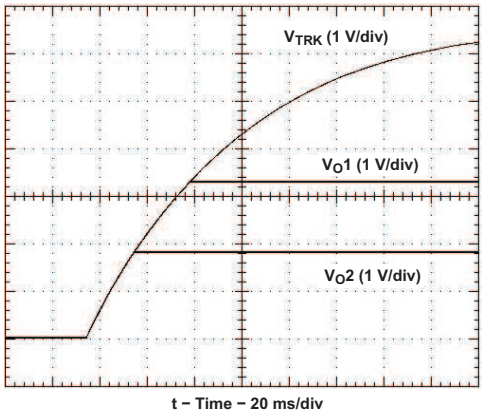

Figure 30. Simultaneous Power Up With Auto-Track Control

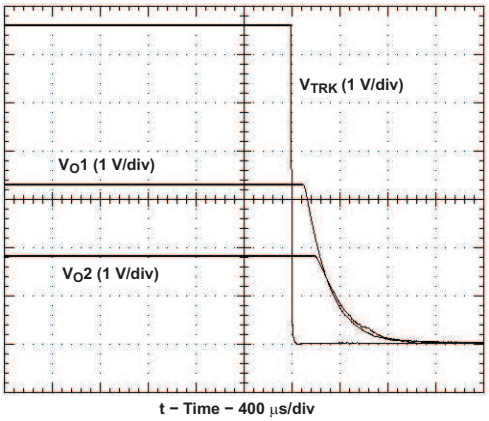

Figure 31. Simultaneous Power Down With Auto-Track Control

Prebias Startup Capability

A prebias startup condition occurs as a result of an external voltage being present at the output of a power module prior to its output becoming active. This often occurs in complex digital systems when current from another power source is backfed through a dual-supply logic component, such as an FPGA or ASIC. Another path might be via clamp diodes as part of a dual-supply power-up sequencing arrangement. A prebias can cause problems with power modules that incorporate synchronous rectifiers. This is because under most operating conditions, these types of modules can sink as well as source output current.

The PTH family of power modules incorporate synchronous rectifiers, but does not sink current during startup(1), or whenever the Inhibit pin is held low. However, to ensure satisfactory operation of this function, certain conditions must be maintained(2). Figure 33 shows an application demonstrating the prebias startup capability. The startup waveforms are shown in Figure 32. Note that the output current (I_O) is negligible until the output voltage rises above the voltage backfed through the intrinsic diodes.

The prebias start-up feature is not compatible with Auto-Track. When the module is under Auto-Track control, it sinks current if the output voltage is below that of a back-feeding source. To ensure a pre-bias hold-off one of two approaches must be followed when input power is applied to the module. The Auto-Track function must either be disabled(3), or the module's output held off (for at least 50 ms) using the Inhibit pin. Either approach ensures that the Track pin voltage is above the set-point voltage at start up.

1. Startup includes the short delay (approximately 10 ms) prior to the output voltage rising, followed by the rise of the output voltage under the module's internal soft-start control. Startup is complete when the output voltage has risen to either the set-point voltage or the voltage at the Track pin, whichever is lowest.
2. To ensure that the regulator does not sink current when power is first applied (even with a ground signal applied to the Inhibit control pin), the input voltage must always be greater than the output voltage *throughout* the power-up and power-down sequence.
3. The Auto-Track function can be disabled at power up by immediately applying a voltage to the module's Track pin that is greater than its set-point voltage. This can be easily accomplished by connecting the Track pin to V_I.

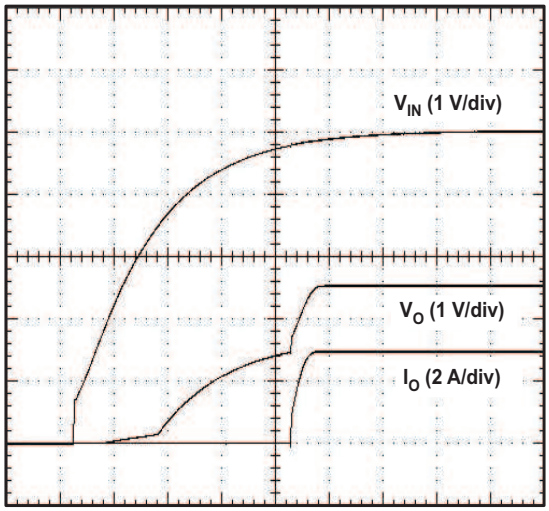

t - Time - 4 ms/div

Figure 32. Prebias Startup Waveforms

Copyright © 2005–2009, Texas Instruments Incorporated

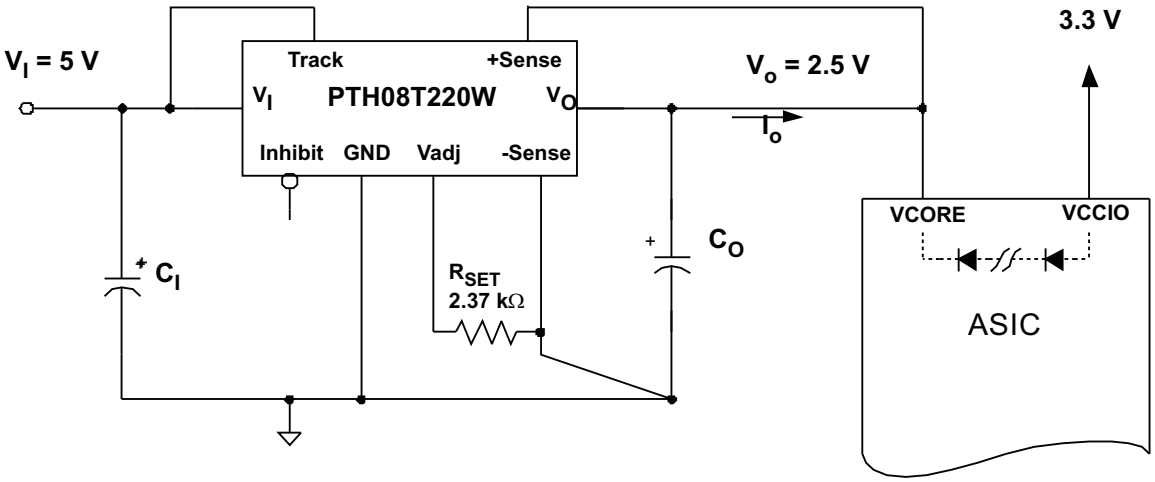

Figure 33. Application Circuit Demonstrating Prebias Startup

Tape & Reel and Tray Drawings

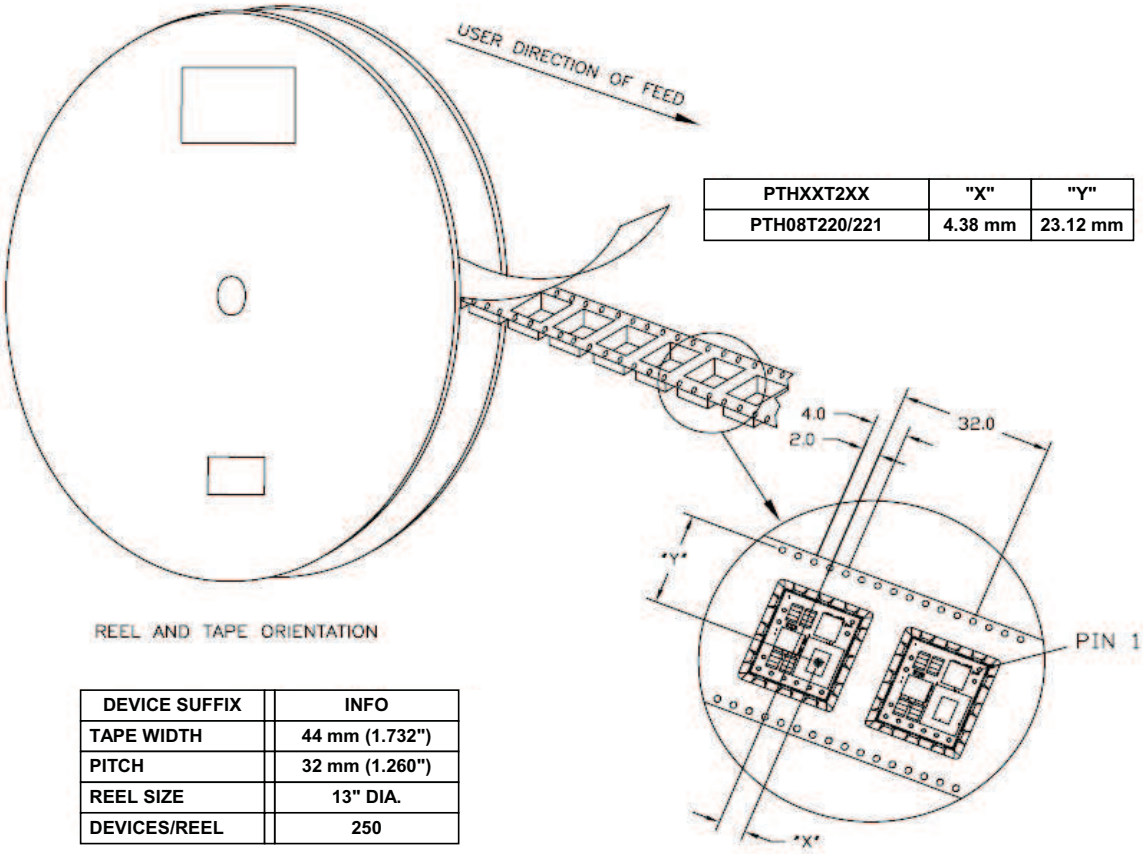

PTHXXT2XX	"X"	"Y"
PTH08T220/221	4.38 mm	23.12 mm

DEVICE SUFFIX	INFO
TAPE WIDTH	44 mm (1.732")
PITCH	32 mm (1.260")
REEL SIZE	13" DIA.
DEVICES/REEL	250

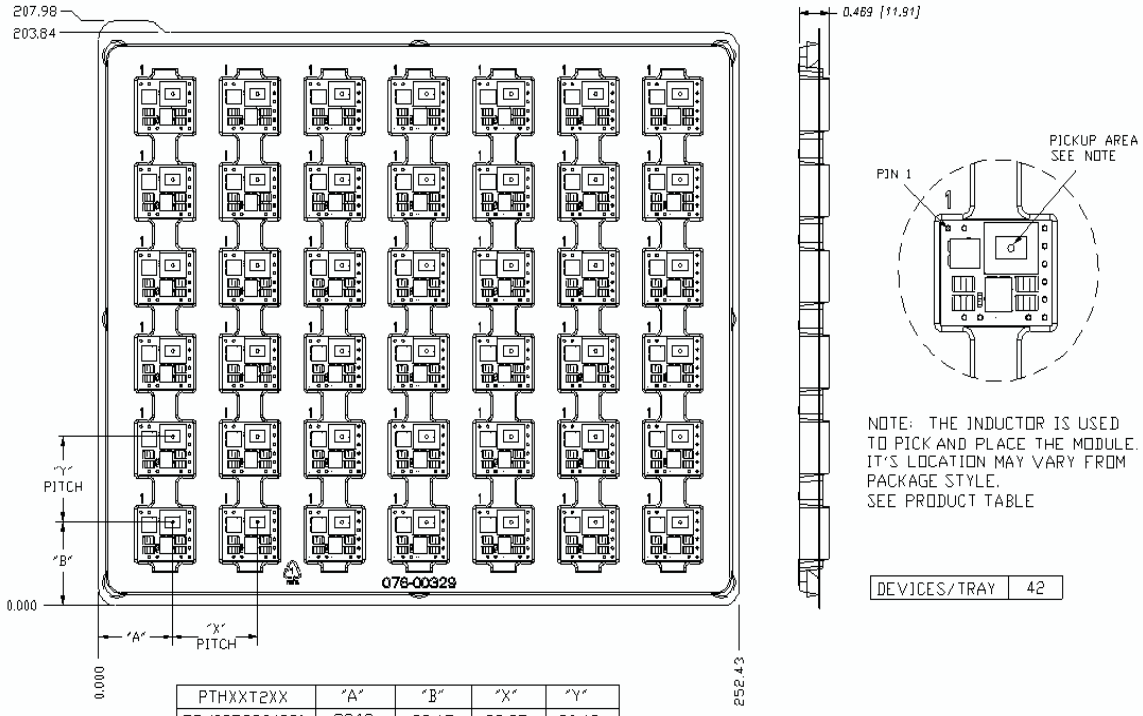

PTHXXT2XX	"A"	"B"	"X"	"Y"
PTH08T220/221	29.12	29.65	33.35	30.48
ALL DIMENSIONS ARE IN MILLIMETER.				

Copyright © 2005–2009, Texas Instruments Incorporated

PACKAGING INFORMATION

Orderable part number	Status (1)	Material type (2)	Package | Pins	Package qty | Carrier	RoHS (3)	Lead finish/ Ball material (4)	MSL rating/ Peak reflow (5)	Op temp (°C)	Part marking (6)
PTH08T220WAD	Active	Production	Through-Hole Module (EAS) | 11	42 | TIW TRAY	Exempt	SN	N/A for Pkg Type	-40 to 85	
PTH08T220WAD.B	Active	Production	Through-Hole Module (EAS) | 11	42 | TIW TRAY	Exempt	SN	N/A for Pkg Type	-40 to 85	
PTH08T220WAH	Active	Production	Through-Hole Module (EAS) | 11	42 | TIW TRAY	Exempt	SN	N/A for Pkg Type	-40 to 85	
PTH08T220WAH.B	Active	Production	Through-Hole Module (EAS) | 11	42 | TIW TRAY	Exempt	SN	N/A for Pkg Type	-40 to 85	
PTH08T220WAS	Active	Production	Surface Mount Module (EAT) | 11	42 | TIW TRAY	No	SNPB	Level-1-235C-UNLIM/ Level-3-260C-168HRS	-40 to 85	
PTH08T220WAS.B	Active	Production	Surface Mount Module (EAT) | 11	42 | TIW TRAY	No	SNPB	Level-1-235C-UNLIM/ Level-3-260C-168HRS	-40 to 85	
PTH08T220WAST	Active	Production	Surface Mount Module (EAT) | 11	250 | SMALL T&R	No	SNPB	Level-1-235C-UNLIM/ Level-3-260C-168HRS	-40 to 85	
PTH08T220WAST.B	Active	Production	Surface Mount Module (EAT) | 11	250 | SMALL T&R	No	SNPB	Level-1-235C-UNLIM/ Level-3-260C-168HRS	-40 to 85	
PTH08T220WAZ	Active	Production	Surface Mount Module (BAT) | 11	42 | TIW TRAY	Exempt	SNAGCU	Level-3-260C-168 HR	-40 to 85	
PTH08T220WAZ.B	Active	Production	Surface Mount Module (BAT) | 11	42 | TIW TRAY	Exempt	SNAGCU	Level-3-260C-168 HR	-40 to 85	
PTH08T220WAZT	Active	Production	Surface Mount Module (BAT) | 11	250 | SMALL T&R	Exempt	SNAGCU	Level-3-260C-168 HR	-40 to 85	
PTH08T220WAZT.B	Active	Production	Surface Mount Module (BAT) | 11	250 | SMALL T&R	Exempt	SNAGCU	Level-3-260C-168 HR	-40 to 85	
PTH08T221WAD	Active	Production	Through-Hole Module (EAS) | 11	42 | TIW TRAY	Exempt	SN	Level-1-235C-UNLIM/ Level-3-260C-168HRS	-40 to 85	
PTH08T221WAD.B	Active	Production	Through-Hole Module (EAS) | 11	42 | TIW TRAY	Exempt	SN	Level-1-235C-UNLIM/ Level-3-260C-168HRS	-40 to 85	
PTH08T221WAS	Active	Production	Surface Mount Module (EAT) | 11	42 | TIW TRAY	No	SNPB	Level-1-235C-UNLIM/ Level-3-260C-168HRS	-40 to 85	
PTH08T221WAZ	Active	Production	Surface Mount Module (BAT) | 11	42 | TIW TRAY	Exempt	SNAGCU	Level-3-260C-168 HR	-40 to 85	

Orderable part number	Status (1)	Material type (2)	Package | Pins	Package qty | Carrier	RoHS (3)	Lead finish/ Ball material (4)	MSL rating/ Peak reflow (5)	Op temp (°C)	Part marking (6)
PTH08T221WAZ.B	Active	Production	Surface Mount Module (BAT) | 11	42 | TIW TRAY	Exempt	SNAGCU	Level-3-260C-168 HR	-40 to 85	
PTH08T221WAZT	Active	Production	Surface Mount Module (BAT) | 11	250 | SMALL T&R	Exempt	SNAGCU	Level-3-260C-168 HR	-40 to 85	
PTH08T221WAZT.B	Active	Production	Surface Mount Module (BAT) | 11	250 | SMALL T&R	Exempt	SNAGCU	Level-3-260C-168 HR	-40 to 85	

(1) **Status:** For more details on status, see our product life cycle.

(2) **Material type:** When designated, preproduction parts are prototypes/experimental devices, and are not yet approved or released for full production. Testing and final process, including without limitation quality assurance, reliability performance testing, and/or process qualification, may not yet be complete, and this item is subject to further changes or possible discontinuation. If available for ordering, purchases will be subject to an additional waiver at checkout, and are intended for early internal evaluation purposes only. These items are sold without warranties of any kind.

(3) **RoHS values:** Yes, No, RoHS Exempt. See the TI RoHS Statement for additional information and value definition.

(4) **Lead finish/Ball material:** Parts may have multiple material finish options. Finish options are separated by a vertical ruled line. Lead finish/Ball material values may wrap to two lines if the finish value exceeds the maximum column width.

(5) **MSL rating/Peak reflow:** The moisture sensitivity level ratings and peak solder (reflow) temperatures. In the event that a part has multiple moisture sensitivity ratings, only the lowest level per JEDEC standards is shown. Refer to the shipping label for the actual reflow temperature that will be used to mount the part to the printed circuit board.

(6) **Part marking:** There may be an additional marking, which relates to the logo, the lot trace code information, or the environmental category of the part.

Multiple part markings will be inside parentheses. Only one part marking contained in parentheses and separated by a "~" will appear on a part. If a line is indented then it is a continuation of the previous line and the two combined represent the entire part marking for that device.

Important Information and Disclaimer: The information provided on this page represents TI's knowledge and belief as of the date that it is provided. TI bases its knowledge and belief on information provided by third parties, and makes no representation or warranty as to the accuracy of such information. Efforts are underway to better integrate information from third parties. TI has taken and continues to take reasonable steps to provide representative and accurate information but may not have conducted destructive testing or chemical analysis on incoming materials and chemicals. TI and TI suppliers consider certain information to be proprietary, and thus CAS numbers and other limited information may not be available for release.

In no event shall TI's liability arising out of such information exceed the total purchase price of the TI part(s) at issue in this document sold by TI to Customer on an annual basis.

EAS (R–PDSS–T11) DOUBLE SIDED MODULE

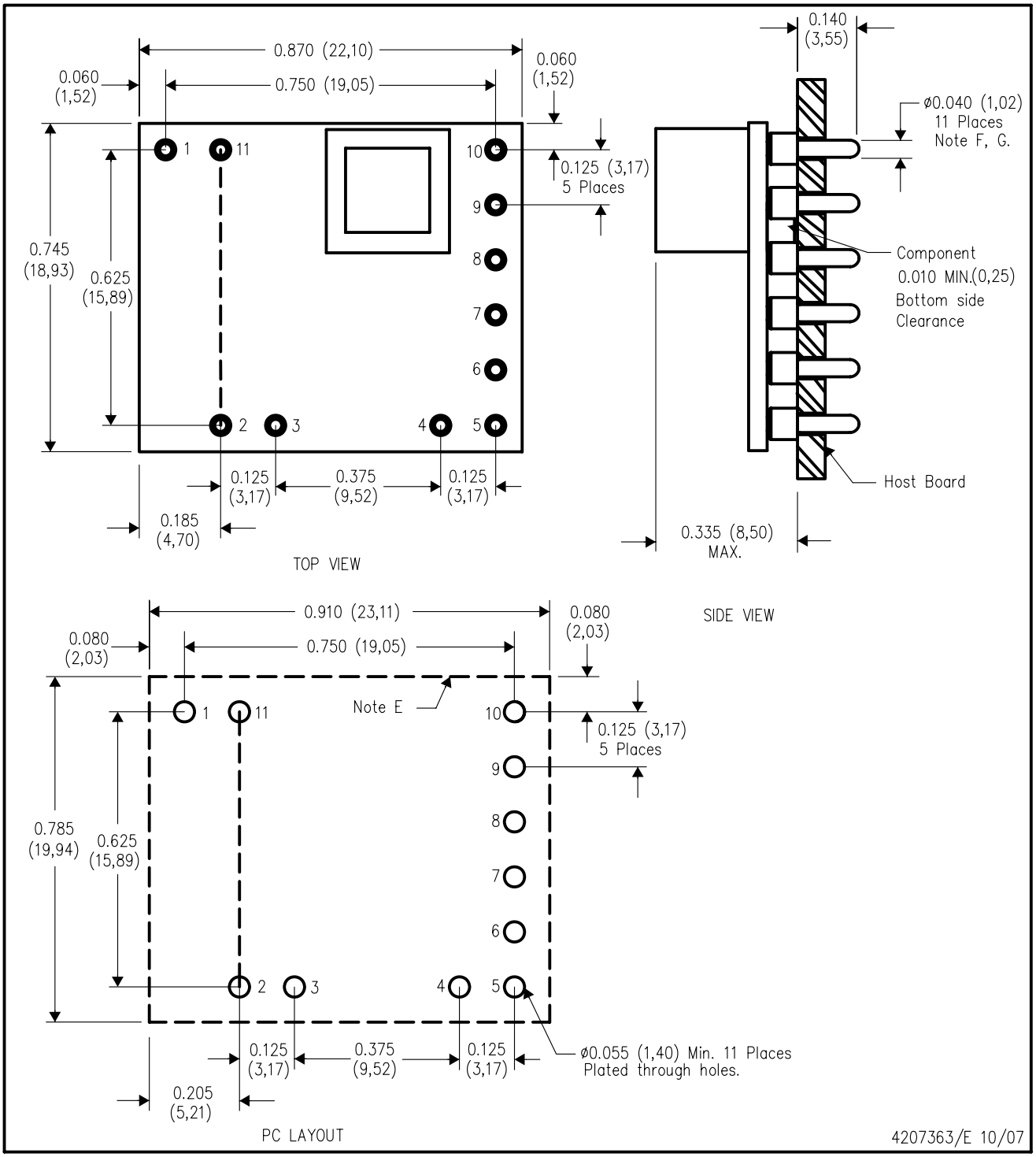

NOTES:
- A. All linear dimensions are in inches (mm).
- B. This drawing is subject to change without notice.
- C. 2 place decimals are ±0.030 (±0,76mm).
- D. 3 place decimals are ±0.010 (±0,25mm).
- E. Recommended keep out area for user components.
- F. Pins are 0.040" (1,02) diameter with 0.070" (1,78) diameter standoff shoulder.
- G. All pins: Material – Copper Alloy
  Finish – Tin (100%) over Nickel plate

BAT (R–PDSS–B11) DOUBLE SIDED MODULE

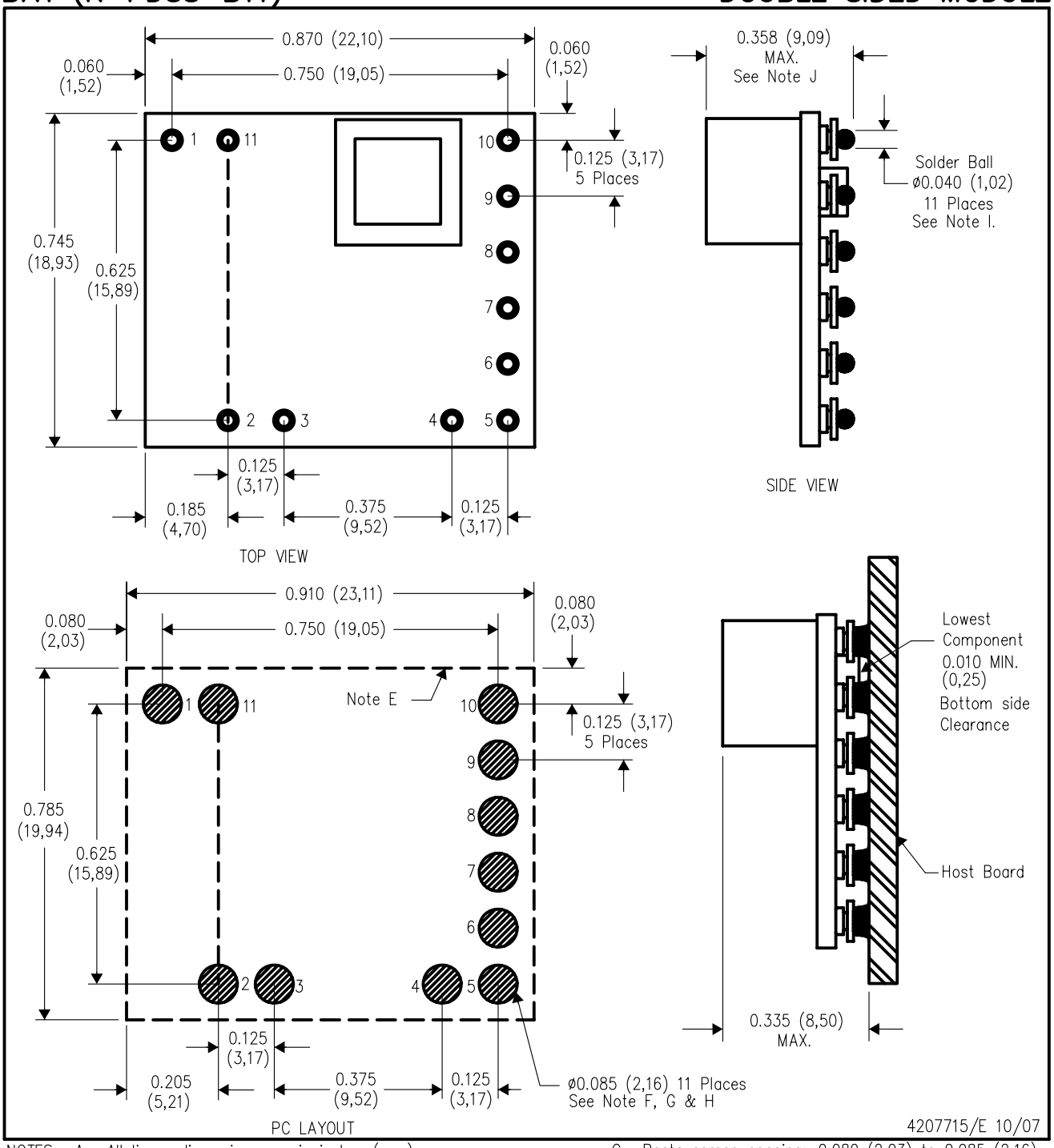

NOTES:
A. All linear dimensions are in inches (mm).
B. This drawing is subject to change without notice.
C. 2 place decimals are ±0.030 (±0,76mm).
D. 3 place decimals are ±0.010 (±0,25mm).
E. Recommended keep out area for user components.
F. Power pin connection should utilize two or more vias to the interior power plane of 0.025 (0,63) I.D. per input, ground and output pin (or the electrical equivalent).
G. Paste screen opening: 0.080 (2,03) to 0.085 (2,16). Paste screen thickness: 0.006 (0,15).
H. Pad type: Solder mask defined.
I. All pins: Material – Copper Alloy
Finish – Tin (100%) over Nickel plate
Solder Ball – 96.5 Sn/3.0 Ag/0.5 Cu
J. Dimension prior to reflow solder.

EAT (R–PDSS–B11) DOUBLE SIDED MODULE

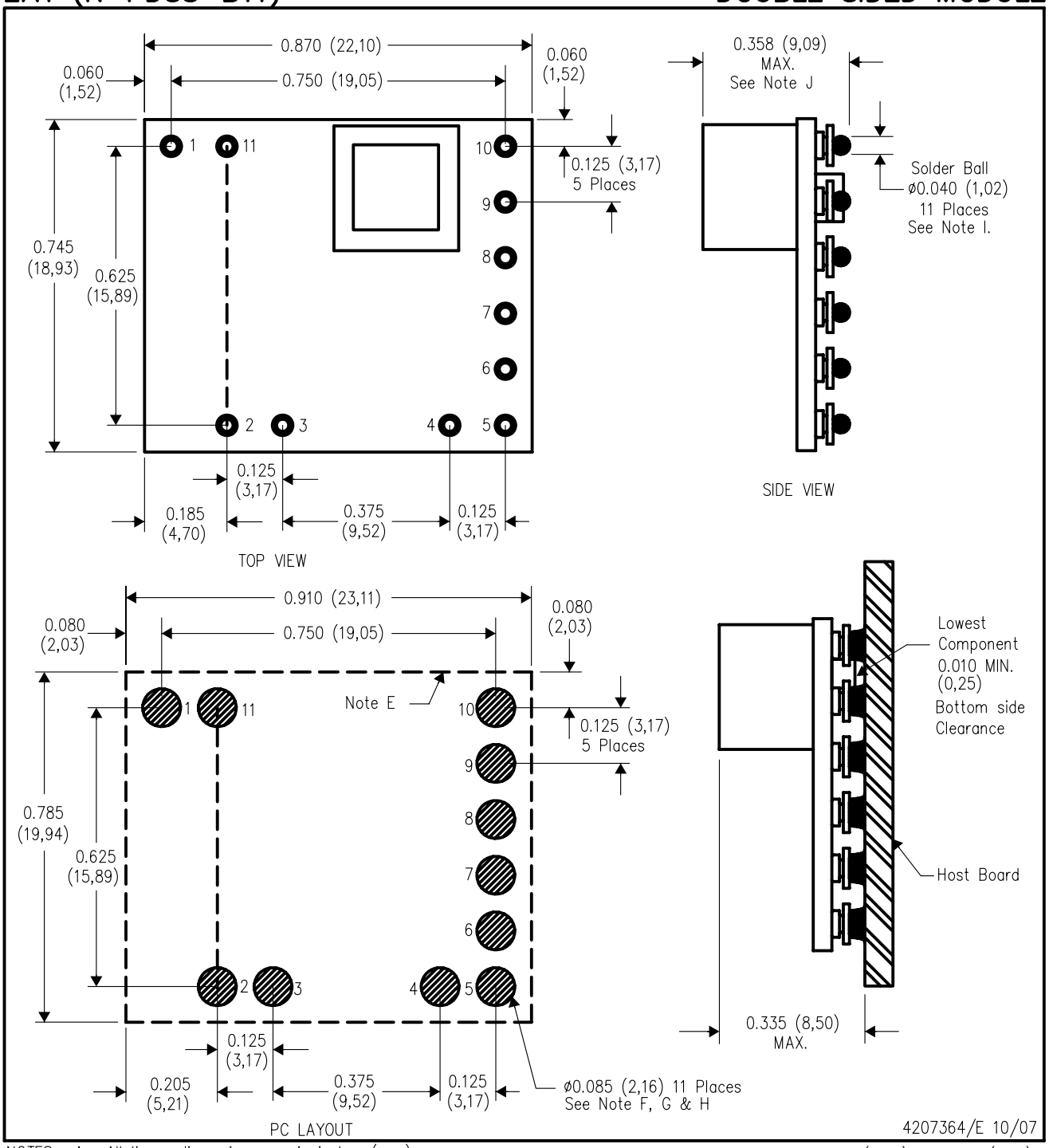

NOTES:
A. All linear dimensions are in inches (mm).
B. This drawing is subject to change without notice.
C. 2 place decimals are ±0.030 (±0,76mm).
D. 3 place decimals are ±0.010 (±0,25mm).
E. Recommended keep out area for user components.
F. Power pin connection should utilize two or more vias to the interior power plane of 0.025 (0,63) I.D. per input, ground and output pin (or the electrical equivalent).
G. Paste screen opening: 0.080 (2,03) to 0.085 (2,16). Paste screen thickness: 0.006 (0,15).
H. Pad type: Solder mask defined.
I. All pins: Material – Copper Alloy
Finish – Tin (100%) over Nickel plate
Solder Ball – See product data sheet.
J. Dimension prior to reflow solder.

IMPORTANT NOTICE AND DISCLAIMER

TI PROVIDES TECHNICAL AND RELIABILITY DATA (INCLUDING DATA SHEETS), DESIGN RESOURCES (INCLUDING REFERENCE DESIGNS), APPLICATION OR OTHER DESIGN ADVICE, WEB TOOLS, SAFETY INFORMATION, AND OTHER RESOURCES “AS IS” AND WITH ALL FAULTS, AND DISCLAIMS ALL WARRANTIES, EXPRESS AND IMPLIED, INCLUDING WITHOUT LIMITATION ANY IMPLIED WARRANTIES OF MERCHANTABILITY, FITNESS FOR A PARTICULAR PURPOSE OR NON-INFRINGEMENT OF THIRD PARTY INTELLECTUAL PROPERTY RIGHTS.

These resources are intended for skilled developers designing with TI products. You are solely responsible for (1) selecting the appropriate TI products for your application, (2) designing, validating and testing your application, and (3) ensuring your application meets applicable standards, and any other safety, security, regulatory or other requirements.

These resources are subject to change without notice. TI grants you permission to use these resources only for development of an application that uses the TI products described in the resource. Other reproduction and display of these resources is prohibited. No license is granted to any other TI intellectual property right or to any third party intellectual property right. TI disclaims responsibility for, and you will fully indemnify TI and its representatives against, any claims, damages, costs, losses, and liabilities arising out of your use of these resources.

TI’s products are provided subject to TI’s Terms of Sale or other applicable terms available either on ti.com or provided in conjunction with such TI products. TI’s provision of these resources does not expand or otherwise alter TI’s applicable warranties or warranty disclaimers for TI products.

TI objects to and rejects any additional or different terms you may have proposed.

Mailing Address: Texas Instruments, Post Office Box 655303, Dallas, Texas 75265
Copyright © 2025, Texas Instruments Incorporated