High Efficiency Synchronous Triple Buck LED Driver for Automotive Front Lighting

NCV78935

The NCV78935 is high efficient Synchronous 3 channel Buck LED Drivers designed for automotive front lighting applications like high beam, low beam, DRL (daytime running light), turn indicator, fog light, static cornering, etc. The NCV78935 is in particular designed for high current LEDs and provides a complete solution to drive three LED strings of up-to 60 V with minimum of external components.

When more LED channels are required on one module, more NCV78925 or NCV78935 devices can be combined, also together with NCV78964 or NCV78902 devices which incorporate the booster circuits with possibility to operate in multiphase-mode. This helps to further optimize a cost effective dimensioning for mid to high power LED systems.

Thanks to the SPI programmability, one single hardware configuration can support various application platforms.

Features

- Single Chip Synchronous Tripple Buck Solution
- Stand-Alone/Limp Home Mode
- 3 independent LED Strings up-to 60 V
- High Current Capability 1.6 A per Output
- Switched Mode Synchronous Bucks with Average Current Regulation through the LEDs, Programmable Buck Frequency
- Independent Supply Voltage for Each Buck Channel
- Integrated Hi-accuracy Current Sensing
- Minimum of External Components
- Low EMC Emission
- High Operating Frequencies to Reduce Inductor Size - up to 2 MHz
- 4 MHz SPI Interface for Dynamic Control of System Parameters
- 48 V Battery System Compliant
- ASIL B Compliant; AEC-Q100 Qualified and PPAP Capable
- These Devices are Pb-Free, Halide Free/BFR Free and are RoHS Compliant

Typical Applications

- High Beam, Low Beam
- Turn Indicator, DRL
- Position or Park Light
- Fog and Static Cornering
- Adaptive Driving Beam
- Pixel Applications

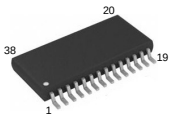

TSSOP38 EP
CASE 137AB

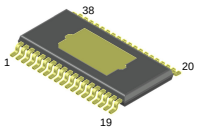

TSSOP38 TEP
CASE 948BX

MARKING DIAGRAM

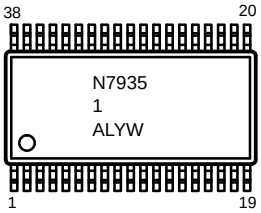

TSSOP38 EP

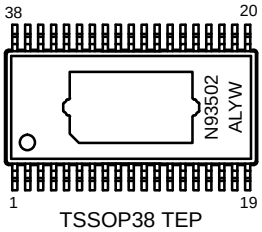

TSSOP38 TEP

N7935, N93502	= Specific Device Code
A	= Assembly Location
L	= Wafer Lot
Y	= Year
W	= Work Week

SAFETY DESIGN – ASIL B

ASIL B Product developed in compliance with ISO 26262 for which a complete safety package is available.

ORDERING INFORMATION

See detailed ordering and shipping information on page 39 of this data sheet.

© Semiconductor Components Industries, LLC, 2025

TYPICAL APPLICATION SCHEMATIC

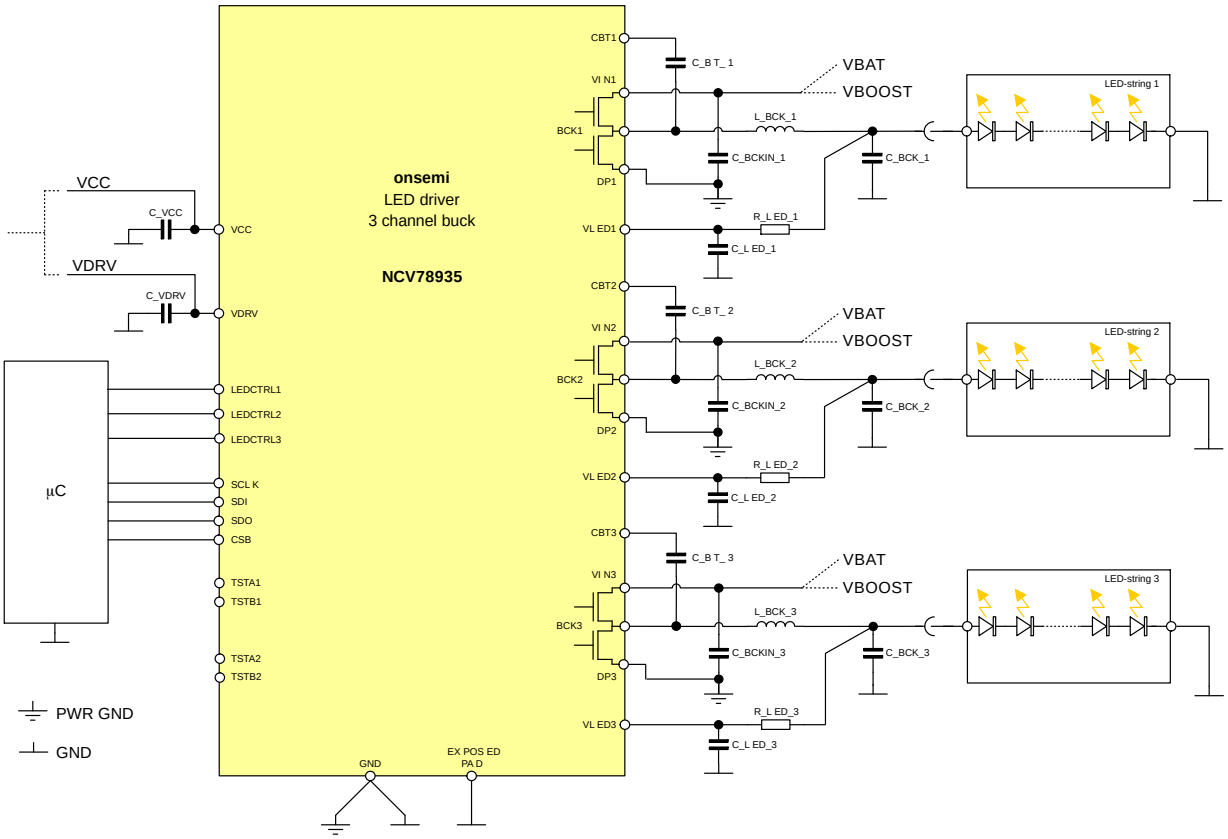

Figure 1. Typical Application Schematic

Table 1. EXTERNAL COMPONENTS

Component	Function	Min	Typ	Max	Unit
L_BCK_x	Buck Regulator Coil (See BUCK REGULATOR Chapter for Details)		47		µH
C_BCK_x	Buck Regulator Output Capacitor (See BUCK REGULATOR Chapter for Details)		470		nF
C_BCKIN_x	Buck Input Capacitor (See PCB LAYOUT RECOMMENDATIONS for Details) (Note 3)		2.2		µF
C_BT_x	Bootstrap Capacitor	300	470	2600	nF
C_VCC	V_{CC} Decoupling Capacitor		470		nF
C_DRV	V_{DRIVE} Decoupling Capacitor		470		nF
R_LED_x	VLEDx Pin Serial Resistor (Notes 1 and 2)		1	2	kΩ
C_LED_x	Optional VLEDx Pin Filter Capacitor (Note 2)		1		nF

1. R_LED_x is necessary to ensure Absolute maximum ratings of IVLEDx current (see Table 3).
2. C_LED_x is optional. If used, time constant of the C_LED_x and R_LED_x filter has to be lower than minimal LEDCTRLx PWM time for proper VLED measurement.
3. Buck Input Capacitor must be placed close to the VINx pin, consider the capacitor's physical dimensions at Top Side Exposed Pad device.

Share Feedback
Your Opinion Matters

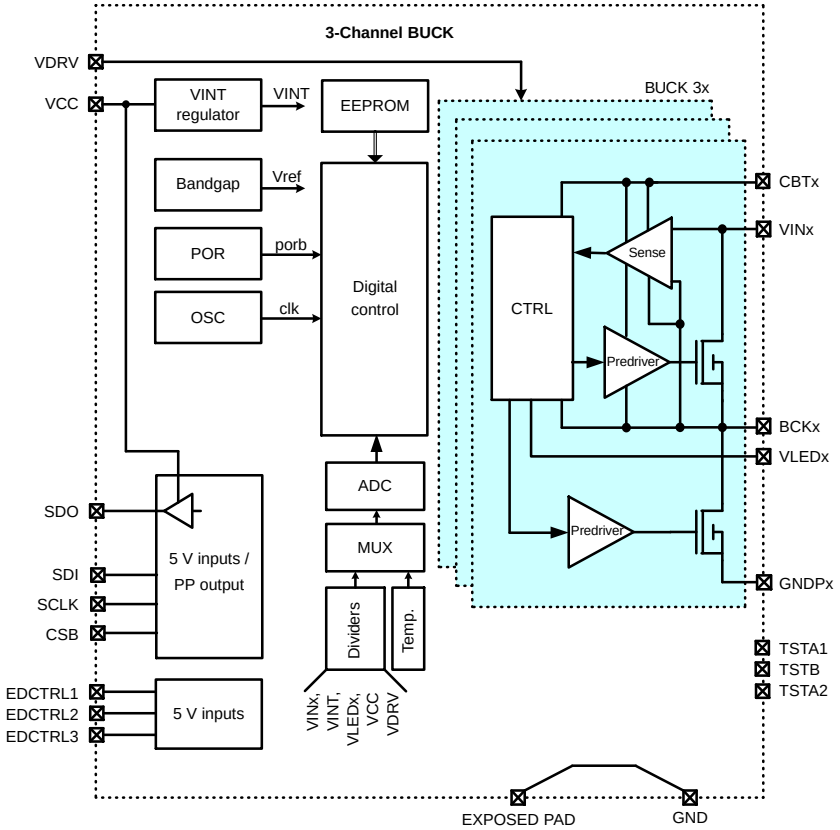

Figure 2. Block Diagram

Share Feedback
Your Opinion Matters

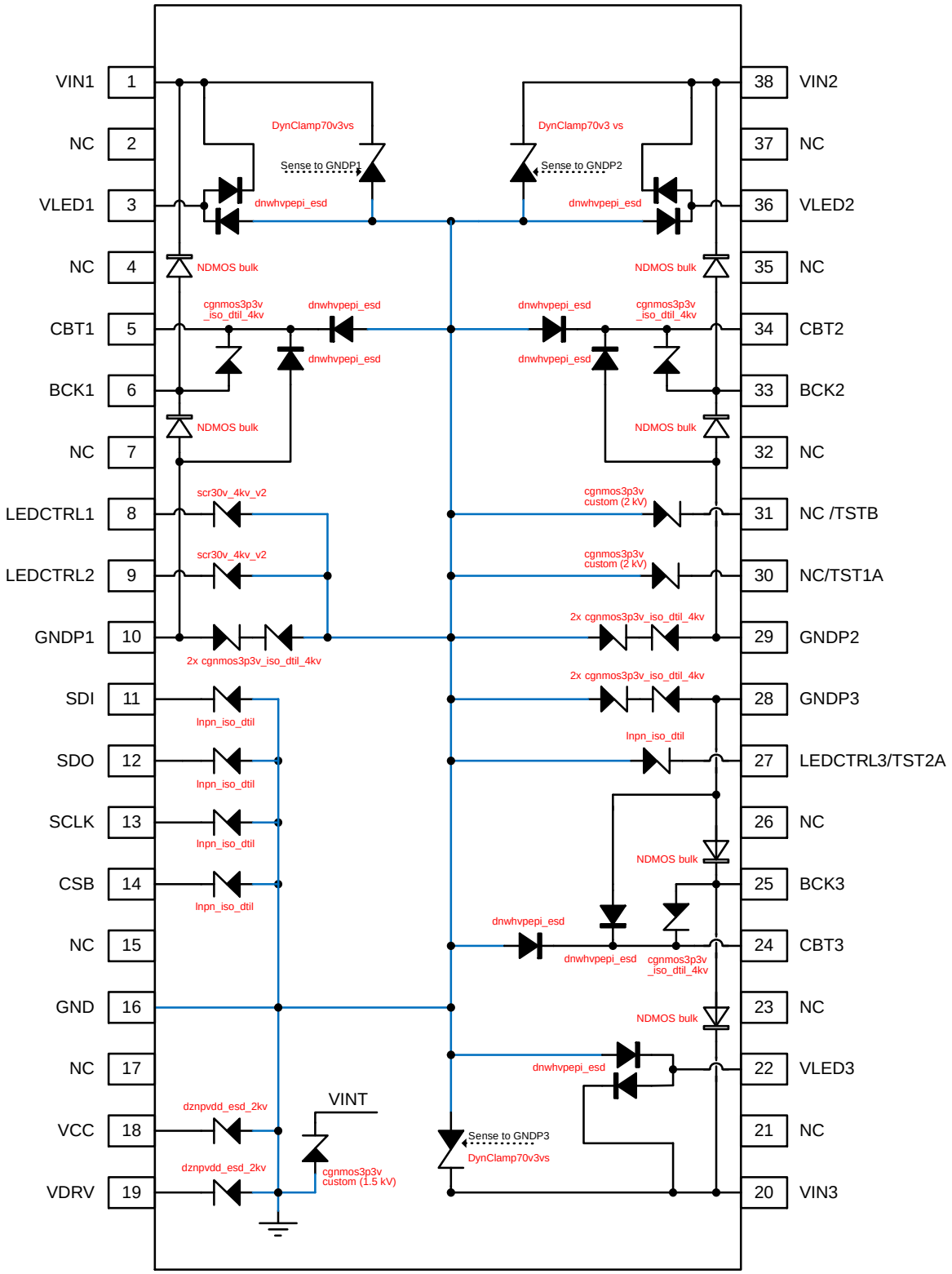

Figure 3. NCV78935 ESD Schematic

Share Feedback
Your Opinion Matters

PACKAGE AND PIN DESCRIPTION

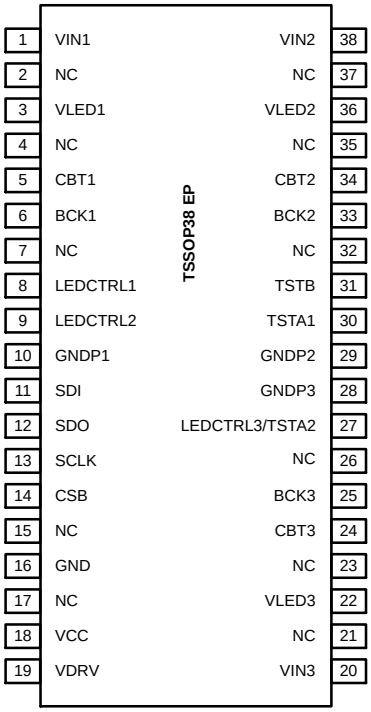

Figure 4. Pin Connections − TSSOP38 EP Bottom EP (Top View)

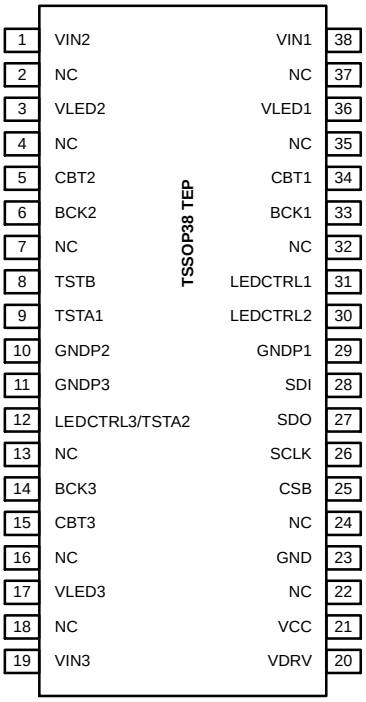

Figure 5. Pin Connections − TSSOP38 TEP Top EP (Top View)

Share Feedback
Your Opinion Matters

Table 2. PIN DESCRIPTION

Pin No. TSSOP38 EP	Pin No. TSSOP38 TEP	Pin Name	Description	I/O Type
1	38	VIN1	Buck1 input pin	HV Analog
2	37	NC	Not Connected (to be left floating)	
3	36	VLED1	VLED1 voltage sense pin	HV Analog
4	35	NC	Not Connected (to be left floating)	
5	34	CBT1	Buck1 bootstrap capacitor pin	HV Analog
6	33	BCK1	Buck1 output pin	HV Analog
7	32	NC	Not Connected (to be left floating)	
8	31	LEDCTRL1	Buck1 control signal	DI, 5 V
9	30	LEDCTRL2	Buck2 control signal	DI, 5 V
10	29	GNDP1	Buck1 power ground	Ground
11	28	SDI	SPI data in pin	DI, 5 V
12	27	SDO	SPI data out pin	DO, 5 V
13	26	SCLK	SPI clock pin	DI, 5 V
14	25	CSB	SPI chip select pin	DI, 5 V
15	24	NC	Not Connected (to be left floating)	
16	23	GND	Ground pin	Ground
17	22	NC	Not Connected (to be left floating)	
18	21	VCC	3.3 or 5 V supply pin	MV supply
19	20	VDRV	5 V supply pin	MV supply
20	19	VIN3	Buck3 input pin	HV Analog
21	18	NC	Not Connected (to be left floating)	
22	17	VLED3	VLED3 voltage sense pin	HV Analog
23	16	NC	Not Connected (to be left floating)	
24	15	CBT3	Buck3 bootstrap capacitor pin	MV Analog
25	14	BCK3	Buck3 output pin	HV Analog
26	13	TSTB2	Test output B2 (to be left floating in the application)	DO, HV
27	12	LEDCTRL3	Buck3 control signal	DI, 5 V
28	11	GNDP3	Buck3 power ground	Ground
29	10	GNDP2	Buck2 power ground	Ground
30	9	TSTA1	Test output A1 (to be left floating in the application)	DO, HV
31	8	TSTB1	Test output B1 (to be left floating in the application)	DO, HV
32	7	NC	Not Connected (to be left floating)	
33	6	BCK2	Buck2 output pin	HV Analog
34	5	CBT2	Buck2 bootstrap capacitor pin	HV Analog
35	4	NC	Not Connected (to be left floating)	
36	3	VLED2	VLED2 voltage sense pin	HV Analog
37	2	NC	Not Connected (to be left floating)	
38	1	VIN2	Buck2 input pin	HV Analog
EP	EP	EXPOSED PAD	The exposed pad electrically connected to GND inside the device	

Share Feedback
Your Opinion Matters

Table 3. ABSOLUTE MAXIMUM RATINGS

Characteristic	Symbol	Min	Max	Unit
Buck Input Voltage (Note 4, 5)	VINx	−0.3	66	V
Output Pin to the Buck Coil (Note 5, 6)	BCKx	VGNDPx − 0.3	VINx + 0.3	V
VCC Supply Voltage	VCC	−0.3	6	V
VDRV Supply Voltage	VDRV	−0.3	6	V
LED Voltage Sense Pin	VLEDx	−0.3	66	V
The Bootstrap Capacitor Pin	CBTx	Max of (BCKx − 0.3, −0.3)	BCKx + 3.6	V
Buck Control Signal (Note 9)	LEDCTRLx	−0.3	6	V
SPI Clock Signal	SCLK	−0.3	6	V
SPI Chip Select Signal	CSB	−0.3	6	V
SPI Data Input Signal	SDI	−0.3	6	V
SPI Data Output Signal	SDO	−0.3	6	V
Peak Voltage at Buck Power Ground	GNDPD	−2	2	V
Buck Power Ground (Note 10, 11)	GNDP	−0.3	0.3	V
VLED Pin Sink/Source Current	IVLEDx	−30	30	mA
Storage Temperature (Note 7)	T_{STRG}	−50	150	°C
The Exposed Pad (Note 8)	EXPAD	−0.3	0.3	V
Electrostatic Discharge on Component Level Human Body Model (Note 12)	V_{ESD_HBM}	−2	+2	kV
Electrostatic Discharge on Component Level Charge Device Model (Note 12)	V_{ESD_CDM}	−500	+500	V

Stresses exceeding those listed in the Maximum Ratings table may damage the device. If any of these limits are exceeded, device functionality should not be assumed, damage may occur and reliability may be affected.

4. Absolute maximum rating for VINx pins is 70 V for limited time < 50 ms to comply with ISO21780:2020
5. V(VINx − BCKx) < 68 V
6. The HS switch in OFF state during the test of the rating
7. For limited time up to 100 hours. Otherwise the max storage temperature is 85 °C.
8. The exposed pad must be hard wired to GND pin in the application to ensure both electrical and thermal connection.
9. For ATE max = 30 V
10. Peak voltage after 100 ns single pole low pass filter
11. For ATE max = 3.6 V
12. This device series incorporates ESD protection and is tested by the following methods:
    ESD Human Body Model tested per ANSI/ESDA/JEDEC JS-001
    ESD Charge Device Model tested per EIA-JESD22-C101
    Latch-up Current Maximum Rating: ≤100 mA per JEDEC standard: JESD78

Share Feedback
Your Opinion Matters

Operating ranges define the limits for functional operation and parametric characteristics of the device. A mission profile (Note 13) is a substantial part of the operation conditions; hence the Customer must contact **onsemi** in order to mutually agree in writing on the allowed missions profile(s) in the application.

Table 4. RECOMMENDED OPERATING RANGES

Characteristic	Symbol	Min	Typ	Max	Unit
Buck Input Voltage with Limited Max. Peak Current (Note 14, 15)	VINxL	6		6.7	V
Buck Input Voltage (Note 15)	VINx	6.7		65	V
VCC Voltage Supply	VCC	3	3.3/5	5.5	V
VCC Voltage Supply during Memory Programming (Note 16)	VCCM	3.1		5.5	V
VDRV Supply Voltage	VDRV	4.5	5	5.5	V
Digital Inputs Voltage (SPI Pins and LEDCTRLx)	DIG_IN	−0.3		5.5	V
Buck Switch Average Output Current	IAVG_BCKx			1.6	A
Ambient Temperature Range		−40		125	°C
Parametric Operating Junction Temperature Range (Note 17, 20)	T_{JP}	−40		150	°C
Functional Operating Junction Temperature Range (Note 18, 20)	T_{JF}	−45		160	°C
Junction Temperature Range during Memory Programming (Note 16, 20)	T_{JM}	−40		85	°C
The Exposed Pad Connection (Note 19)	EXPOSED_PAD	GND − 0.1	GND	GND + 0.1	V

Functional operation above the stresses listed in the Recommended Operating Ranges is not implied. Extended exposure to stresses beyond the Recommended Operating Ranges limits may affect device reliability.

13. A mission profile describes the application specific conditions such as, but not limited to, the cumulative operating conditions over life time, the system power dissipation, the system's environmental conditions, the thermal design of the customer's system, the modes, in which the device is operated by the customer, etc.
14. Output peak current is limited to 75% of its maximum value at given range.
15. Max. output peak current is twice the value of maximum average current at given range.
16. Memory programming limited to 100 cycles.
17. The parametric characteristics of the circuit are not guaranteed outside the Parametric operating junction temperature range.
18. The circuit functionality is not guaranteed outside the Functional operating junction temperature range. Also please note that the device is verified on bench for operation up to 170 °C but that the production test guarantees 165 °C only.
19. The exposed pad must be hard wired to GND pin in an application to ensure both electrical and thermal connection.
20. Temperature reported by internal temperature sensor.

Table 5. THERMAL RESISTANCE

Characteristic	Package	Symbol	Min	Typ	Max	Unit
Thermal Resistance Junction to Exposed Pad (Note 21)	TSSOP38 EP	Rthjp		5.5		°C/W
Thermal Resistance Junction to Exposed Pad for TEP Variant	TSSOP38 TEP	Rthjp		5.5		°C/W

21. Includes also typical solder thickness under the Exposed Pad (EP).

Share Feedback
Your Opinion Matters

Table 6. ELECTRICAL CHARACTERISTICS (All Min and Max parameters are guaranteed over full junction temperature (T_{JP}) range (−40 °C; 150 °C), unless otherwise specified.)

Characteristic	Symbol	Condition	Min	Typ	Max	Unit
CURRENT CONSUMPTION						
The VCC Current Consumption	I_VCC			16	22	mA
The VDRV Current Consumption	I_VDRV	All the bucks disabled.	10	50	150	µA
Leakage Current in OFF State (Note 22, 23, 24)	ILEAK_OFF	VCC = 0 V			10	µA
OSC16M: SYSTEM OSCILLATOR CLOCK						
Oscillator Output Frequency (Trimmed)	OSC_CLK	OSC_CAL[4:0] = 0	14.4	16	17.6	MHz
Oscillator Output Frequency (Untrimmed)	OSC_CLK_0	OSC_CAL[4:0] = 0, TRIMERR = 1	6	11	20	MHz
Oscillator Frequency Calibration Step	OSC_SCAL	Trimmed oscillator. Calibrated via OSC_CAL[4:0] SPI register.	40	100	160	kHz
Oscillator Duty Cycle	OSC_DUTY		40	50	60	%
VINT: 3.15 V LOW VOLTAGE INTERNAL ANALOG AND DIGITAL SUPPLY						
The VINT Voltage @ VCC = 5.5 V	VINT_VCC5	Iload = 0 .. 20 mA	3	3.15	3.3	V
The VINT Voltage @ VCC = 3.0 V	VINT_VCC3	Iload = 20 mA	2.8		3	V
VINT POR Threshold, VINT Rising	POR_R		2.5	2.6	2.7	V
VINT POR Threshold, VINT Falling	POR_F		2.45		2.65	V
VINT POR Hysteresis	POR_H			0.05		V
The POR Debounce Time (Both Edges)	POR_DEB		0.5	2	6	µs
ADC FOR MEASURING VIN1, VIN2, VIN3, VCC, VDRV, VINT, VLED1, VLED2, VLED3, TEMP						
ADC Resolution	ADC_RES			9		Bits
Integral Nonlinearity (INL)	ADC_INL	Best fitting straight line method. Measured between 5 % and 95 % of input full scale voltage (Note 25).	−2		2	LSB
Differential Nonlinearity (DNL)	ADC_DNL	Best fitting straight line method. Measured between 5 % and 95 % of input full scale voltage (Note 25).	−2		2	LSB
ADC Offset at Output	ADC_OFFS	Measured between 5 % and 95 % of input full scale voltage (Note 25).	−5		5	LSB
ADC Gain Error at Output	ADC_GAIN_ERR	Measured between 5 % and 95 % of input full scale voltage (Note 25).	−5		5	%
Time for 1 SAR Conversion	ADC_CONV			7.5		µs
ADC Full Scale for VIN Measurement	ADC_VIN		66.5	70	73.5	V
ADC Full Scale for VLEDx Measurement	ADC_VLED_L	The VLED range code is “0”	66.5	70	73.5	V
ADC Full Scale for VLEDx Measurement	ADC_VLED_H	The VLED range code is “1”	33.25	35	36.75	V
VIN to VLED Error	ADC_VIN_VLED_ERR		−0.6		0.6	V
ADC Full Scale for VCC Measurement	ADC_VCC		5.86	6.18	6.5	V
ADC Full Scale for VDRV Measurement	ADC_VDRV		5.86	6.18	6.5	V
ADC Full Scale for VINT Measurement	ADC_VINT		4.6	4.8	5	V
Temperature Measurement Range	TMP_RG	Typical values	−60		195	°C
Temperature Measurement Resolution	TMP_RES	Typical values		1.05		°C/LSB
VLED Input Impedance	ADC_VLEDR	Measured at 50 V, VBCKx = 0 V	0.3	0.6	1.2	MΩ

Share Feedback
Your Opinion Matters

Table 6. ELECTRICAL CHARACTERISTICS (All Min and Max parameters are guaranteed over full junction temperature (T_{JP}) range (−40 °C; 150 °C), unless otherwise specified.) (continued)

Characteristic	Symbol	Condition	Min	Typ	Max	Unit
ADC FOR MEASURING VIN1, VIN2, VIN3, VCC, VDRV, VINT, VLED1, VLED2, VLED3, TEMP						
TSD Threshold Level	TSD	Guaranteed by trimming	160	170	180	°C
BUCK Channel TSD Threshold	BUCKTSD	Guaranteed by trimming	180	190	200	°C
BUCK REGULATOR − HI SIDE SWITCH AND CURRENT REGULATION						
On Resistance, Range 1	RON1	At room-temperature			0.63	Ω
On Resistance at Hot, Range 1	RON1H	At Tj = 150 °C		1.08	1.33	Ω
On Resistance, Range 2	RON2	At room-temperature			0.25	Ω
On Resistance at Hot, Range 2	RON2H	At Tj = 150 °C		0.43	0.53	Ω
Avg. Current Full Scale, Range 1	IAVG1_H	BUCKx_IRNG = 0, BUCKx_IAVG[7:0] = 255		640		mA
Avg. Current Full Scale, Range 2	IAVG2_H	BUCKx_IRNG = 1, BUCKx_IAVG[7:0] = 255		1600		mA
Avg. and Rip. Current Sense Threshold Increase per Code, Range 1	D_IAVG1	linear increase		2.5		mA
Avg. and Rip. Current Sense Threshold Increase per Code, Range 2	D_IAVG2	linear increase		6.27		mA
Current Threshold Accuracy in 40% FS to 100% FS (Note 26)	IERR		−3		3	%
Current Threshold Accuracy in 12.5% FS to 40% FS (Note 26)	IERR_LRNG		−15		15	%
Average Current Accuracy in Application in 40% FS to 100% FS in CCM (Note 27)	IERR_APP		−5		5	%
The Rise Edge Slope, Normal Mode	TRISE			3		V/ns
Falling Slope	TFALL	When the driver steers the slope		6		V/ns
BUCK REGULATOR − SYNCHRONOUS RECTIFIER SWITCH						
On Resistance of the Switch MOS	SRRON	Typ. at room-temperature		0.17		Ω
On Resistance of the Switch MOS	SRRONH	Max. at hot			0.35	Ω
BUCK REGULATOR − TOFF GENERATOR						
Minimum Possible Vcoil-Toff Setting (Note 28)	TOFFMIN	Valid is the one representing a longer Toff time			5	µs·V
Minimum Possible Vcoil-Toff Setting (Note 28)	TOFFABSMIN	Valid is the one representing a longer Toff time			100	ns
Maximum Possible Vcoil-Toff Setting (Note 28)	TOFFMAX		50			µs·V
Relative Vcoil-Toff Adjustment Step	TOFFSTEP	Relative step in Toff adjustment, defined as (Toff(n+1) − Toff(n)) / Toff(n)		$\sqrt[16]{2}-1$		
Relative Error of the Vcoil-Toff Setting (Note 29)	TOFFERRREL		−15		+15	%
BUCK REGULATOR − TIMING COMPARATOR FOR AVERAGE CURRENT DETECTION						
Timing Ratio Error (Note 30)	TONCMPERR	For on times from 100 ns to 50 µs	−1.5		1.5	%
Timing ratio T2/T1 for Time Out Comparator	TONTOUT		1.05		2.6	

Share Feedback
Your Opinion Matters

Table 6. ELECTRICAL CHARACTERISTICS (All Min and Max parameters are guaranteed over full junction temperature (T_{JP}) range (−40 °C; 150 °C), unless otherwise specified.) (continued)

Characteristic	Symbol	Condition	Min	Typ	Max	Unit
BUCK REGULATOR − COMPARATORS						
VLED_LOW Comparator (detection of shorted LED output)						
Detection Level of VLED to Be Too Low	VLEDLOW		0.7	1.0	1.3	V
VLED_LOW Hysteresis	VLEDLOW_H			50		mV
VLED_LOW Detection Filter Time	VLEDLOW_F		0.1		2	µs
BUCK REGULATOR − CBT RECHARGE CIRCUIT						
Startup Precharge Current	IPRECH		0.1		1	mA
TON Termination (Forced Recharge) Threshold	VRECH	Shall exhibit no hysteresis, UVS signal	2.4	2.7	2.9	V
Under-voltage Monitor Threshold − V(CBT, BCK) Rising	VPORON		3		3.55	V
Under-voltage Monitor Threshold − V(CBT, BCK) Falling	VPOROFF		2.2		2.7	V
Over-voltage Monitor Threshold	CBTOV		3.65			V
Delay of the PORB Release after PD	TDUVRES		5			µs
Regulated Voltage Level	VVBT		3	3.3	3.6	V
Current Limitation	VVBTILIM	VDRV > 4.5 V, VCBT = 2.2 V	70		190	mA
5 V TOLERANT DIGITAL INPUTS (SCLK, CSB, SDI, LEDCTRL1, LEDCTRL2, LEDCTRL3)						
High Level Input Voltage	DI5_VINH	VINT = 2.7 V to 3.6 V	2			V
Low Level Input Voltage	DI5_VINL	VINT = 2.7 V to 3.6 V			0.8	V
Input Threshold Hysteresis	DI5_VINHyst		0.1		0.9	V
The Pull-up/down Resistance (Note 31)	DI5_RP		40	100	180	kΩ
Input Leakage Current	DI5_ILIN	Pull resistance disabled	−1		1	µA
LEDCTRLx PWM Propagation Delay	DI5_SWDEL	Activation time of the BUCKx switch from the LEDCTRLx pin		4		µs
LEDCTRLx Sampling Resolution	DI5_SR	Resynchronization 1−2 clock periods		62		ns
5 V DIGITAL OUTPUT (SDO)						
High Level Output Voltage	DO5_VOH	Iout = −2 mA (current flows into the pin)	VCC − 0.5		VCC	V
Low Level Output Voltage	DO5_VOL	Iout = 2 mA	0		0.5	V
Output Delay; Both Edges	DO5_DEL	I = −10 mA or Cload = 50 pF		7	30	ns
SPI INTERFACE						
CSB Setup Time	csb_setup	CSB setup time before first SCLK rising edge	375			ns
CSB Hold Time	csb_hold	CSB hold time after last SCLK rising edge	150			ns
CSB High Time	csb_gap	Gap between two CSB low pulses	500			ns
SCLK Clock Period	sclk_per		250			ns
SCLK Low Time	sclk_lo		0.4 x sclk_per		0.6 x sclk_per	ns
SCLK High Time	sclk_hi		0.4 x sclk_per		0.6 x sclk_per	ns

Share Feedback
Your Opinion Matters

Table 6. ELECTRICAL CHARACTERISTICS (All Min and Max parameters are guaranteed over full junction temperature (T_{JP}) range (−40 °C; 150 °C), unless otherwise specified.) (continued)

Characteristic	Symbol	Condition	Min	Typ	Max	Unit
SPI INTERFACE						
SDI Setup Time before Each SCLK Rising Edge	sdi_setup		45			ns
SDI Hold Time after Each SCLK Rising Edge	sdi_hold		45			ns
SDO Hold Time	sdo_hold	Depends on parasitic capacitance of SDO line	0		62.5 + Max (DO5_DEL)	ns

Product parametric performance is indicated in the Electrical Characteristics for the listed test conditions, unless otherwise noted. Product performance may not be indicated by the Electrical Characteristics if operated under different conditions.

22. Sum of currents from VINx, SDI, SCLK, CSB and LEDCTRLx pins.
23. Conditions: V(VCC) = V(LEDCTRLx) = 0 V; V(VINx) = 16 V; V(SDI) = V(SCLK) = V(CSB) = 5 V.
24. Temperature range −40 °C to 85 °C.
25. For VDRV minimum measured voltage is 2.5 V.
26. Accuracy calculated based on calibration data and IDAC measurement (IDAC is the source of nonlinearities). This parameter only represents precision of current comparator (ICMP) threshold across IDAC code.

    Maximum possible system IAVG error with ideal coil is $\sqrt{IERR^2 + TONCMPERR^2}$. Valid for CCM only.
27. The average current accuracy in application is tested with: L_{BUCK} = 47 μH (Panasonic ETQP4M470YFN), C_{BUCK} = 1 μF (generic ceramic capacitor X7R, 100V, 1 μF) and f_{BUCK} = 2 MHz for Buck current range 1 and f_{BUCK} = 400 kHz for Buck current range 2.
28. Limits of the Toff adjustment (with respect to the calibration procedure), which are possible to reach and where the functionality is guaranteed. Setting beyond these limits may lead to an erratic functionality and so such setting is not allowed.
29. For any given condition and setting, valid is the one leading to the widest tolerance. VLED > 2 V.
30. For any condition, the limit yielding wider tolerance applies. For definition of Time offset and Timing ratio error please see Average Current Accuracy chapter.
31. Pull-down resistance for LEDCTRLx, pull-up resistance to VINT for CSB and LEDCTRLx. LEDCTRLx have pull-down or pull-up resistor connected according to LEDCTRLx_MD[1:0] SPI register. Valid only in active mode when VCC supply is present.

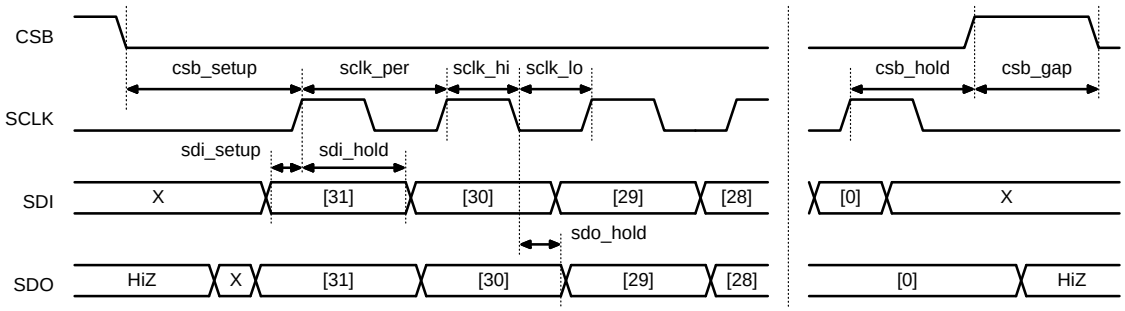

Figure 6. SPI Communication Timing

Share Feedback
Your Opinion Matters

TYPICAL CHARACTERISTICS

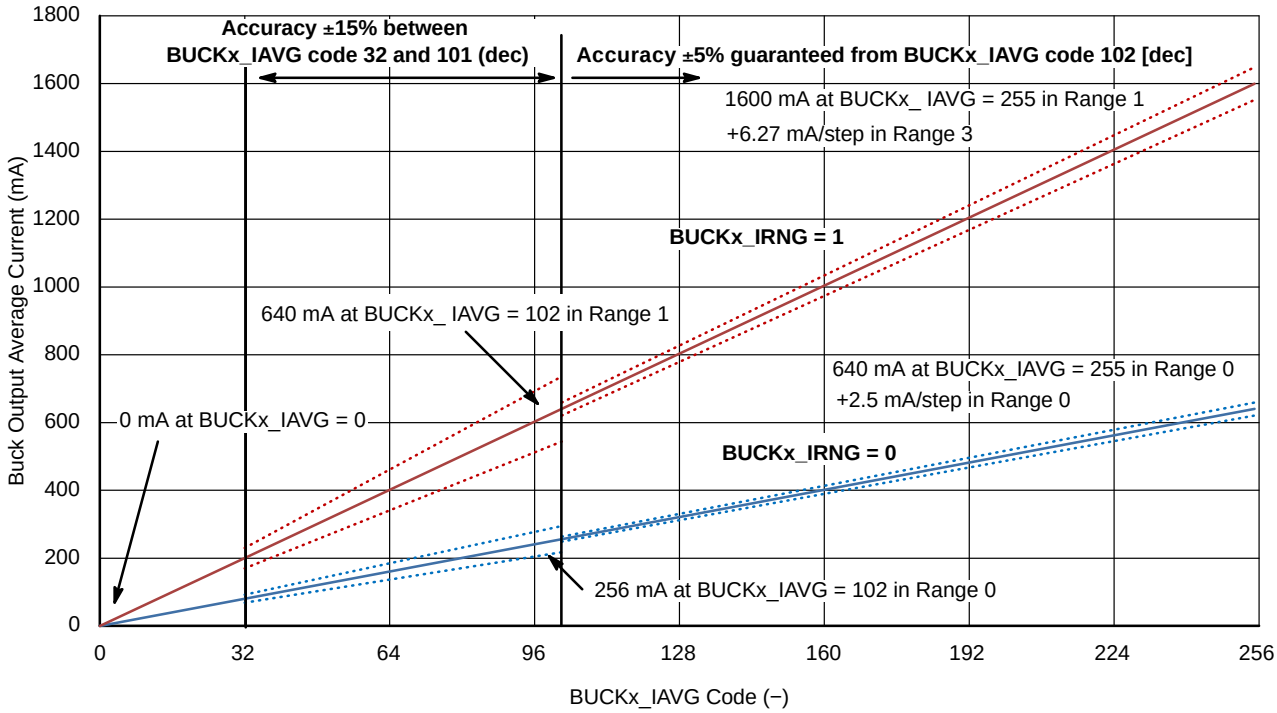

Figure 7. Buck Average Current vs. BUCKx_IRNG Range and BUCKx_IAVG Code

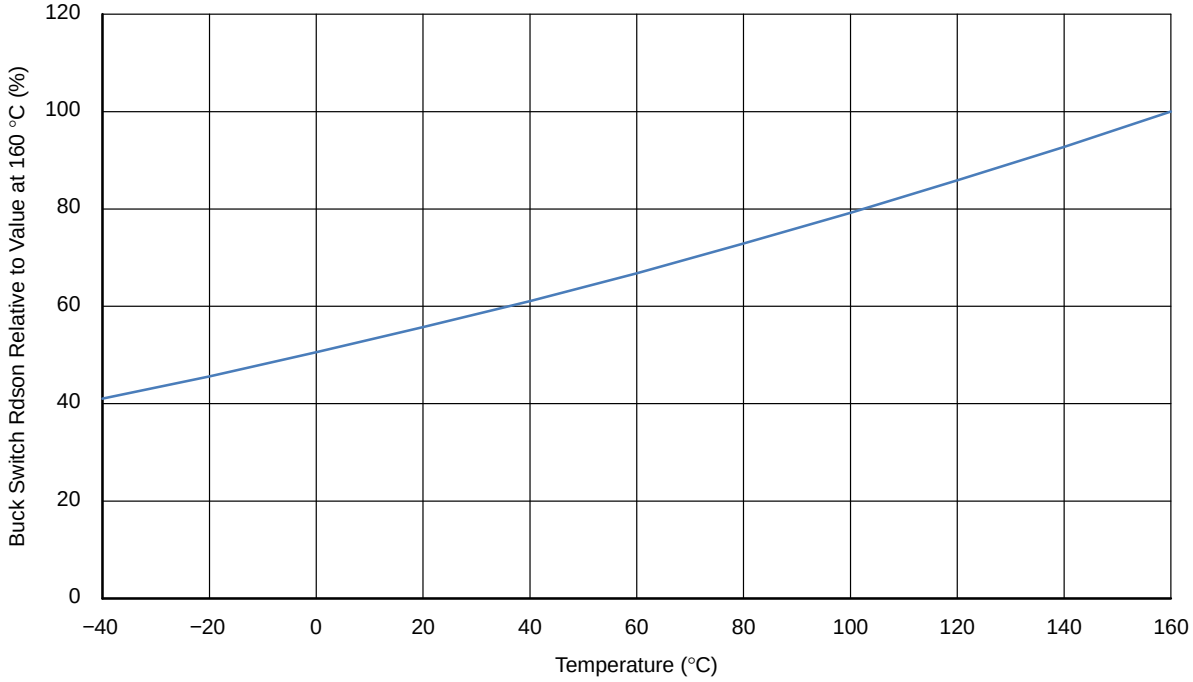

Figure 8. Typical Temperature Behavior of Buck HS Switch Rdson Relative to the Value at 160 °C

Share Feedback
Your Opinion Matters

DETAILED OPERATING DESCRIPTION

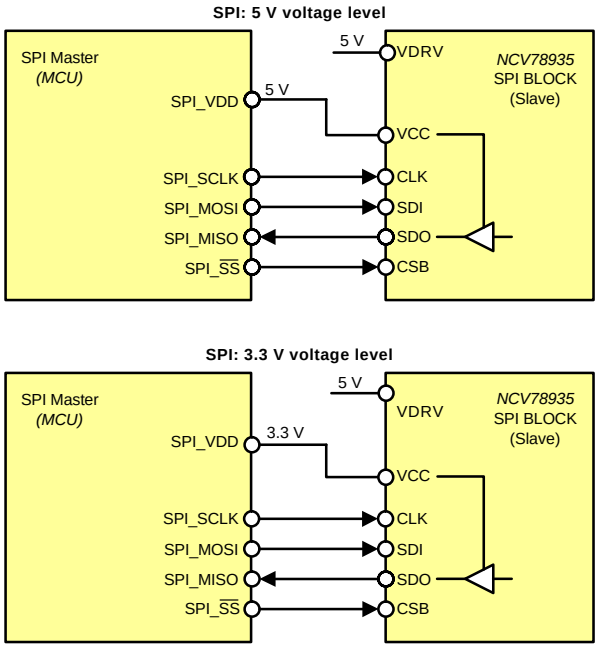

Figure 9. SPI Connection Scenarios and Power Supply Strategy

SUPPLY CONCEPT IN GENERAL

Two types of voltages have to be brought to the NCV78935 chip − low voltage VCC and VDRV supply and high voltages to each VINx for providing energy to the Buck regulators. More detailed description follows.

VDRV Supply

The VDRV supply voltage represents the power for:

- Buck internal synchronous rectifier switches,
- Buck bootstrap capacitors (C_BTx).

This supply is separated from the VCC to limit the noise on sensitive circuitries. 5 V is required for reliable operation over wide operating conditions.

VCC Supply

The VCC supply voltage represents power for the internal supply VINT. It also defines interface voltage with the microcontroller on push-pull SDO pin and shall be selected accordingly (3.3 or 5 V).

By disconnecting the VCC supply, the Low power mode can be entered. In typically setup small external switch can be placed into VCC supply line.

VINT Supply

The internal regulator generates the main low voltage digital and analog supply VINT for the chip.

The Power-On-Reset circuit (POR) monitors the VINT voltage to control the out-of-reset and reset entering state. At power-up, the chip will exit from reset state when VINT > POR_R. No SPI communication is possible in reset state.

VINx Supply

The VIN1, VIN2 and VIN3 supply voltages are the main high voltage supply for the Buck outputs. The voltage is supposed to be provided either by NCV78964/NCV78902 Booster circuit or by battery voltage in the application. Each buck input can be supplied from different voltage supply if needed. All input pins VINx have to be connected by low impedance track to ensure proper buck performance.

Internal Clock Generation

An internal RC clock generator is used to run all the digital functions in the chip. The clock is trimmed in the factory prior to delivery. Its accuracy is guaranteed under full operating conditions and is independent from external component selection. All timings depend on OSC_CLK accuracy (refer to Table 6 “OSC16M: SYSTEM OSCILLATOR CLOCK” for details).

In the application, the oscillator can be further calibrated via OSC_CAL[4:0] SPI register.

For this purpose the CSB_DUR[19:0] register is introduced, which allows to measure duration of CSB signal, precisely generated by MCU, and by this way indirectly check the oscillator frequency.

ADC

General

The built-in analog to digital converter (ADC) is an 9-bit capacitor based successive approximation register (SAR). This embedded peripheral can be used to provide the following measurements to the external Micro Controller Unit (MCU):

- VCC voltage: sampled at the VCC pin;
- VDRV voltage: sampled at the VDRV pin;
- VINT voltage;
- VTEMP measurement (chip temperature);
- VINx [1;2;3] voltages: sampled at the VINx pins;
- VLEDx [1;2;3] voltages: measured during on and off state;
- VLEDxON [1;2;3] voltages: measured during on state (just before LEDCTRLx falling edge);
- VLEDxOFF [1;2;3] voltages: measured during off state (just before LEDCTRLx rising edge).

The internal NCV78935 ADC state machine samples all the above channels automatically, taking care for setting the analog MUX and storing the converted values in memory. The external MCU can readout all ADC measured values via the SPI interface, in order to take application specific decisions. Please note that none of the MCU SPI commands interfere with the internal ADC state machine sample and conversion operations: the MCU will always get the last available data at the moment of the register read.

Share Feedback
Your Opinion Matters

Basic measurement cycle consists from the measurements in shown order:

VDRV → VIN1 → VLED1 → VCC → VIN2 → VLED2 → VINT → VIN3 → VLED3 → VTEMP

VLEDxON measurement request is triggered when BUCKx_EN is 1 and LEDCTRLx falling edge (or corresponding internal signal when internal pwm dimming is used) is detected.

VLEDxOFF measurement request is triggered when BUCKx_EN is 1 and LEDCTRLx rising edge (or corresponding internal signal when internal pwm dimming is used) is detected.

Current ADC measurement is interrupted when the request for measurement of VLEDxON/VLEDxOFF with higher priority than current measurement comes. VTEMP priority is used for priority comparison. After inserted VLEDxON/OFF measurement is finished, measurement cycle continuous at interrupted place.

After measurement of VLEDxON/OFF or VTEMP, priorities are updated in the following way:

- Every channel with higher priority than measured channel keeps its priority unchanged;
- Every channel with lower priority than measured channel increases its priority by 1;
- Measured channel have its priority set to the lowest.

After POR, measurement channel priorities are (from the highest to the lowest): LED1ON, LED1OFF, LED2ON, LED2OFF, LED3ON, LED3OFF, VTEMP.

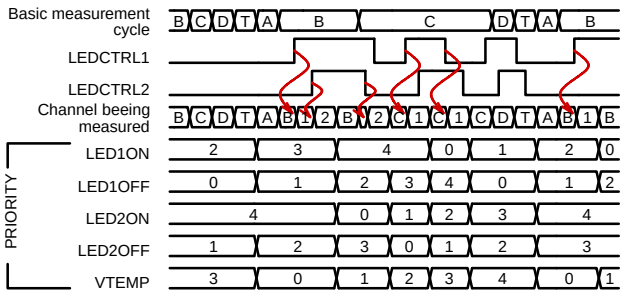

Figure 10. Measurement Priority Example

Supply Voltage ADC: V_{CC}

The supply voltage is sampled at VCC pin. The (9-bit) conversion ratio is 6.18/511 (V/dec) = 12.1 (mV/dec) typical. The converted value can be found in the SPI register VCC[8:0].

Supply Voltage ADC: V_{DRV}

The supply voltage is sampled at VDRV pin. The (9-bit) conversion ratio is 6.18/511 (V/dec) = 12.1 (mV/dec) typical. The converted value can be found in the SPI register VDRV[8:0].

Logic Supply Voltage ADC: V_{INT}

The logic supply voltage is sampled internally. The (9-bit) conversion ratio is 4.8/511 (V/dec) = 9.4 (mV/dec) typical. The converted value can be found in the SPI register VINT[8:0].

Buck Input Voltages ADC: V_{IN1}, V_{IN2}, V_{IN3}

These measurements refer to the buck input voltages at the VINx [1;2;3] pins, with an 9-bit conversion ratio of 70/511 (V/dec) = 0.137 (V/dec) typical, with conversion results inside the SPI registers VINx[8:0].

Device Temperature ADC: V_{TEMP}

By means of the VTEMP measurement, the MCU can monitor the device junction temperature (T_J) over time. The conversion formula is:

$$T_J = 1.05 \cdot (\text{VTEMP}[8:0] - 249) \qquad \text{(eq. 1)}$$

VTEMP[8:0] is the value read out directly from the related SPI register. The value is also used internally by the device for the *thermal warning* and *thermal shutdown* functions. More details on these diagnostic flags can be found in the dedicated sections in this document.

LED String Voltages ADC: V_{LEDx}, V_{LEDxON}, $V_{LEDxOFF}$

The voltage at the pins VLEDx [1;2;3] is measured. There are 2 ranges available, that can be selected by means of VLEDx_RNG register, to obtain higher resolution for LED voltage measurement.

Conversion ratios in dependency on selected range are:

0x0: 70/511 (V/dec) = 137.0 (mV/dec);
0x1: 35/511 (V/dec) = 68.5 (mV/dec);

This information, found in registers VLEDx[8:0], VLEDxON[8:0] and VLEDxOFF[8:0] can be used by the MCU to infer about the LED string status, for example, individual shorted LEDs.

BUCK REGULATOR

General

The NCV78935 contains three high-current integrated buck current regulators, which are the sources for the LED strings. The bucks are powered from the booster regulator or from battery voltage with proper input filter and reverse polarity protection. Each buck channel can be powered from different input voltage.

Buck Current Regulation Principle

Each buck controls the peak current ($I_{BUCK_{peak}}$) and average current ($I_{BUCK_{AVG}}$) and incorporates a constant ripple ($\Delta I_{BUCK_{pkpk}}$) control circuit to ensure stable average current through the LED string, independently from the string voltage. On top of that, constant frequency (f_{BUCK}) mode is available.

The buck average current is in fact described by the formula:

$$I_{BUCK_{AVG}} = I_{PEAK_{peak}} - \frac{\Delta I_{BUCK_{RIP}}}{2} \qquad \text{(eq. 2)}$$

This is graphically exemplified by Figure 11.

Share Feedback
Your Opinion Matters

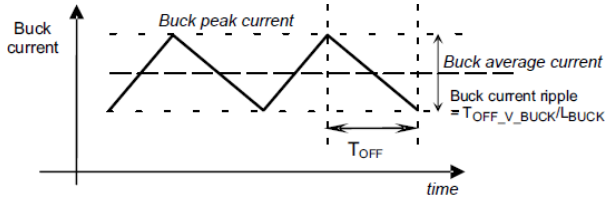

Figure 11. Buck Regulator Controlled Average Current

The average current ($I_{BUCK_{AVG}}$) is programmable through the device by means of the internal registers for range selection BUCKx_IRNG and code BUCKx_IAVG[7:0]. The peak current is regulated automatically by internal algorithm.

The LED average current in time (DC) is equal to the buck average current. LED ripple current is defined by the Buck inductor ripple current, the buck capacitor C_{BUCK} and the LED string impedance. A rule of thumb is to target a 50% ripple reduction with the capacitor C_{BUCK} and this is normally obtained with a low cost ceramic component ranging from 100 nF to 470 nF. The following figure reports a typical example waveform:

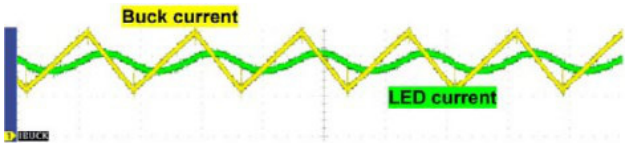

Figure 12. LED Current AC Components Filtered Out by Output Impedance (Oscilloscope Snapshot)

The use of C_{BUCK} is a cost effective way to improve EMC performances without the need to increase the value of L_{BUCK}, which would be certainly a far more expensive solution.

Constant Frequency Regulation Principle

Constant operating frequency of each buck can be programmed by BUCKx_FREQ[5:0] register with values related to Table 7. This regulation loop is able to achieve constant buck frequency by varying the current ripple by dedicated algorithm.

When BUCK_FREQ[5:0] register is 0, the frequency regulation is disabled and buck runs in constant ripple operating mode which is described in the following paragraph.

Table 7. BUCK FREQUENCY REGULATION

BUCKx_FREQ[5:0]	Freq (kHz)	BUCKx_FREQ[5:0]	Freq (kHz)
0	OFF	32	691
1	180	33	719
2	188	34	753
3	196	35	784
4	205	36	821
5	214	37	857
6	223	38	893
7	233	39	932
8	244	40	975
9	254	41	1016
10	265	42	1061
11	277	43	1110
12	289	44	1157
13	302	45	1208
14	316	46	1263
15	331	47	1324
16	345	48	1381
17	360	49	1438
18	376	50	1506
19	392	51	1567
20	410	52	1641
21	429	53	1714
22	447	54	1786
23	466	55	1864
24	487	56	1949
25	508	57	2032
26	530	58	2122
27	555	59	2220
28	578	60	2313
29	604	61	2415
30	632	62	2526
31	662	63	2648

Share Feedback
Your Opinion Matters

Summary of SPI Parameters Related to Frequency Regulation:

BUCKx_FREQ[5:0] − control register selecting Buck operating frequency

BUCKx_FREQ_ABOVE − control register defining whether frequency is regulated below (0) or above (1) threshold BUCKx_FREQ

BUCKx_FREQ_FAST_RCVR − control register defining regulation speed:
0 − Slow: regulation step is always 1. There is always minimal response time between two regulations.
1 − Fast: regulation step is controlled by BUCKx_FREQ_RATE[1:0]. Regulation is running every regulation cycle after the first minimal response time.

BUCKx_FREQ_RSP[1:0] − control register selecting minimal regulation response time:

Table 8.

BUCKx_FREQ_RSP[1:0]	Minimal Response Time (ms)
0	0.1
1	6.4
2	12.8
3	25.6

BUCKx_FREQ_RATE[1:0] − control register which sets maximum regulation step within one regulation cycle:

Table 9.

BUCKx_FREQ_RATE[1:0]	Max Number of Steps
0	1
1	2
2	4
3	8

BUCKx_FREQ_PAUSE − control register allowing to pause frequency regulation.

BUCKx_TOFF_MON[6:0] − status register monitoring actual TOFF time.

Constant Ripple Regulation Principle

The formula that defines the total ripple current over the buck inductor is also hereby reported:

$$\Delta I_{BUCK_{RIP}} = \frac{T_{OFF} \cdot (V_{LED} + V_{BDRDSON})}{L_{BUCK}} = \frac{T_{OFF} \cdot V_{COIL}}{L_{BUCK}} = \frac{T_{OFF_}V_{COIL_}i_{SPI}}{L_{BUCK}} \quad \text{(eq. 3)}$$

In the formula above, T_{OFF} represents the buck switch off time, V_{COIL} is the voltage over the inductor (sensed at VLEDx and BCKx pins) and L_{BUCK} is the buck inductance value. The parameter $T_{OFF_}V_{COIL_}i_{SPI}$ is programmable by SPI (BUCKx_TOFF[6:0] register), with values related to Table 6 “BUCK REGULATOR − TOFF GENERATOR”. The device is trimmed in the way that code 32 in BUCKx_TOFF[6:0] register corresponds to 5 µs·V and from this reference value 1 code to each direction corresponds to step of $\sqrt[16]{2}$. In order to achieve a constant ripple current value, the device varies the T_{OFF} time inversely proportional to the V_{COIL} according to the selected factor $T_{OFF_}V_{COIL_}i_{SPI}$. As a consequence to the constant ripple control and variable off time, the buck switching frequency depends on the input voltage and LED voltage in the following way:

$$f_{BUCK} = \frac{(V_{IN} - V_{LED})}{V_{IN}} \cdot \frac{1}{T_{OFF}} = \frac{(V_{IN} - V_{LED})}{V_{IN}} \cdot \frac{V_{LED}}{T_{OFF_}V_{COIL}T_{OFF_}i_{SPI}} \quad \text{(eq. 4)}$$

Average Current Regulation Principle

Required average current ($I_{BUCK_{AVG}}$) is programmable through the device by means of the internal registers for range selection BUCKx_IRNG and code BUCKx_IAVG[7:0].

The NCV78935 is able to regulate the average current based on the information obtained during Ton time only. The current is measured during Ton time twice − at $I_{BUCK_{AVG}}$ level and at $I_{BUCK_{peak}}$ level. The time between $I_{BUCK_{valley}}$ and $I_{BUCK_{AVG}}$ is compared to time between $I_{BUCK_{AVG}}$ and $I_{BUCK_{peak}}$ and $I_{BUCK_{peak}}$ (in fact “ $I_{BUCK_{peak}} - I_{BUCK_{AVG}}$ ” value) is regulated by internal algorithm to make both times equal and match the programmed average current.

Information about regulated value of “ $I_{BUCK_{peak}} - I_{BUCK_{AVG}}$” is available in BUCKx_IRIP[8:0] status register.

Automatic regulation of buck average current can be paused (meaning BUCKx_IRIP is not updated) when BUCKx_IREG_PAUSE register is written to 1.

Summary of SPI Parameters Related to Current Regulation:

BUCKx_IRNG − control register selecting buck current range.

BUCKx_IAVG[7:0] − control register defining buck average current.

BUCKx_TOFF[6:0] − control register defining buck inductor current ripple when frequency regulation is disabled

BUCKx_IREG_PAUSE − control register allowing to pause buck average current regulation.

BUCKx_IRIP[8:0] − status register, read only. Provides information about “ $I_{BUCK_{peak}} - I_{BUCK_{AVG}}$ ” value regulated by internal algorithm.

BUCKx_IRIP_UPD − status bit informing, that BUCKx_IRIP[8:0] register was updated with measurement result.

BUCKx_TOFF_MON[6:0] − status register monitoring regulated or set $T_{OFF} \cdot V_{COIL}$l parameter (physically corresponding to inductor current ripple).

Share Feedback
Your Opinion Matters

BUCKx_REGSTATUS[1:0] − reports status of IRIP control algorithm. All statuses are summarized in the following table:

Table 10. IRIP REGULATION STATUS REPORTING

IRIP Regulation Status	BUCKx_REGSTATUS[1:0] Value
Buck regulation is disabled	00
IRIP is settling (buckx_irip increment is larger than 1)	11
IRIP is at target (buckx_irip increment value is 1)	10
IRIP regulation failure (failure detected 5 times in a row or automatic regulation sets buckx_irip to 0 or 511)	01

Buck Operating Modes

Continuous Current Mode (CCM)

T_{OFF} time is generated by TOFF generator and its duration is inversely proportional to V_{COIL} voltage. Current ripple is defined by the following formula:

$$\Delta I_{BUCK_{RIP}} = \frac{T_{OFF} \cdot V_{COIL}}{L_{BUCK}} \quad \text{(eq. 5)}$$

and corresponding peak current is

$$I_{BUCK_{peak}} = I_{BUCK_{AVG}} + \frac{I_{BUCK_{RIP}}}{2} \quad \text{(eq. 6)}$$

This peak value will be found automatically if Average current regulation loop is enabled.

If toff ≥ toff_ZC then operation goes either to BCM or DCM mode.

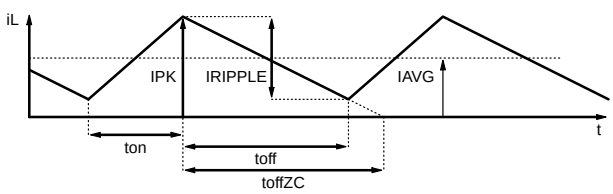

Figure 13. Inductor Current in CCM Mode

Border Continuous Mode (BCM)

If BCM mode is not disabled by buck configuration (BUCKx_ZCD_DIS = 0), the buck starts operation in BCM mode when toff is greater than toff_ZC. In this mode toff is limited to toff_ZC by ZCD (zero cross detection) retrigger controller.

Average current regulation loop will find the following peak value:

$$I_{BUCK_{peak}} = 2 \cdot I_{BUCK_{AVG}} = \Delta I_{BUCK_{RIP}} \quad \text{(eq. 7)}$$

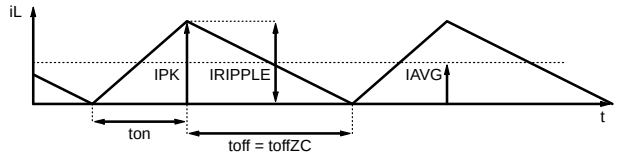

Figure 14. Inductor Current in BCM Mode

Discontinuous Current Mode (DCM)

If BCM mode is disabled by buck configuration (BUCKx_ZCD_DIS = 1), the buck will operate in DCM mode when toff is greater than toff_ZC. In this mode toff is not limited to toff_ZC and full toff is applied.

When correction of the average current in DCM mode is disabled (BUCKx_DCM_CORR[2:0] = 0), the average current regulation loop will find the following peak value:

$$I_{BUCK_{peak}} = I_{BUCK_{AVG}} = \Delta I_{BUCK_{RIP}}, \quad \text{(eq. 8)}$$

but the actual average current $I_{BUCK_{AVG}_ACT}$ will be different than programmed $I_{BUCK_{AVG}}$ and will be

$$I_{BUCK_{AVG}_ACT} = \frac{I_{BUCK_{peak}}}{2} \cdot \frac{ton + toff_ZC}{ton + toff} \quad \text{(eq. 9)}$$

Because toff_ZC < toff then also $I_{BUCK_{AVG}_ACT} < I_{BUCK_{AVG}}$ and actual LED current is smaller than expected.

When correction of the average current in DCM mode is enabled (BUCKx_DCM_CORR[2:0] is different from 0), device regulates $I_{BUCK_{peak}}$ (peak current) in the way so that resulting average current $I_{BUCK_{AVG}_ACT}$ matches that programmed by BUCKx_IAVG[7:0] register.

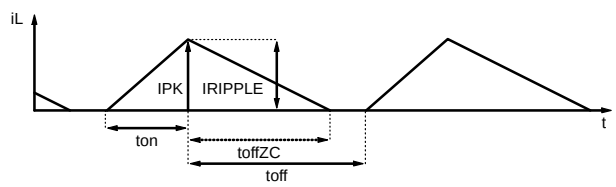

Figure 15. Inductor Current in DCM Mode

Zero Cross Detector

The zero cross detection (ZCD) comparator is implemented to ensure proper Toff time termination when the coil current drops to zero (boundary conduction mode). The implemented advanced zero cross detector allows to operate the device in semi-resonant mode, providing possibility to reduce switching power losses.

Principle is that after the current in the inductor drops to zero, the circuitry waits until the voltage at BCKx pin rises autonomously (by ringing) and at the point the voltage is the highest (should correspond to 2 x VLED), the high side switch switches on, spending the least amount of energy.

Share Feedback
Your Opinion Matters

SPI flag BUCKx_ZCDMODE being ‘1’ indicates that Zero Cross event was detected by Zero Cross detector. When BUCKx_ZCD_DIS SPI control bit was 0 during that moment, the Toff time was terminated by Zero Cross circuitry.

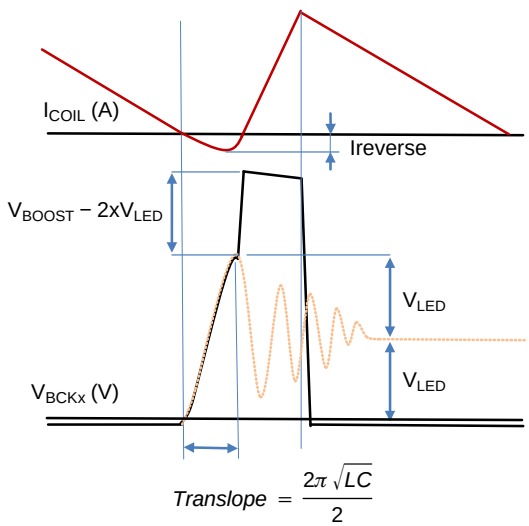

Figure 16. Semi-resonant Mode Principle

Average Current Accuracy

Average current accuracy is determined by the accuracy of the Current sense comparator threshold (see parameters IERR and IERR_LRNG in Table 6 “BUCK REGULATOR − HI SIDE SWITCH AND CURRENT REGULATION”) and accuracy of Timing comparator for average current detection (see parameter TONCMPERR in Table 6 “BUCK REGULATOR − TIMING COMPARATOR FOR AVERAGE CURRENT DETECTION”) which contributes to final $I_{BUCK_{AVG}}$ error depending on ratio of current ripple $\Delta I_{BUCK_{RIP}}$ to average current $I_{BUCK_{AVG}}$. It is possible to derive that contribution of Timing comparator total error is:

$$\frac{\Delta I_{BUCK_{RIP}}}{2 \cdot I_{BUCK_{AVG}}} \cdot \text{TONCPERR} \qquad \text{(eq. 10)}$$

Please note, that in case when current in the inductor does not have ideal triangle waveform shape, final accuracy of average current will be affected. It usually happens when setup is operated in extreme conditions (extremely low or high frequency, small voltage room over inductor, extremely big ripple). This needs to be evaluated in each specific case in real application.

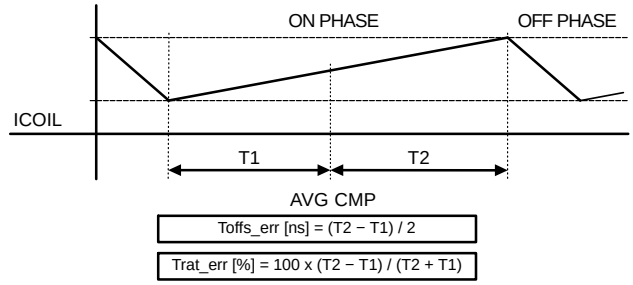

Figure 17. Definition of Time Offset and Time Ratio Error

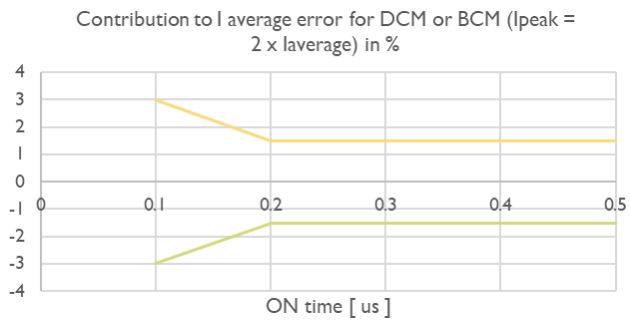

Figure 18. Contribution of Timing Comparator to $I_{BUCK_{AVG}}$ Error

Current Limiter

Buck regulator features current limiter which limits t2 time (corresponding to “$I_{BUCK_{peak}} - I_{BUCK_{AVG}}$”) in relation to t1 time (corresponding to “$I_{BUCK_{AVG}} - I_{BUCK_{valley}}$”), meaning Ton time can be stopped sooner than $I_{BUCK_{peak}}$ is reached. Please see parameter TONTOUT in Table 6 “BUCK REGULATOR − TIMING COMPARATOR FOR AVERAGE CURRENT DETECTION”. Effect of the limiter can be observed for example during regulation setpoint transitions.

Buck Regulator Control and Start

Buck activation is controlled by LEDCTRLx pin and corresponding SPI bit BUCKx_EN.

Table 11. LEDCTRLx PIN MODES

LEDCTRLx_MD[1:0]	Behavior in Application	LEDCTRL Pull-up/down Selection
0	Standard behavior of LEDCTRLx pin: LEDCTRLx = ‘1’: Buck activation controlled by corresponding SPI bit BUCKx_EN LEDCTRLx = ‘0’: Buck turned off	Pull-down
1	Inverted behavior of LEDCTRLx pin: LEDCTRLx = ‘1’: Buck turned off LEDCTRLx = ‘0’: Buck activation controlled by corresponding SPI bit BUCKx_EN	Pull-up
2	LEDCTRL pin ignored. Buck activation controlled by corresponding SPI bit BUCKx_EN	HiZ
3	LEDCTRL pin ignored. Buck activation controlled by corresponding SPI bit BUCKx_EN	HiZ

Share Feedback
Your Opinion Matters

CBT domain stays active app. 12 ms after deactivation of the channel to support minimal dimming frequency 100 Hz ±5%. After that time, CBT domain is deactivated in defined way.

When enabling the Buck channel again after more than 12 ms, the CBT capacitor needs to be charged again and delay after Buck enable signal is introduced before Buck starts its operation. Also there can be observed some transition of up to app. 20 periods until average current is settled at required level. This is caused by internal compensation of comparators offsets and time needed by average current regulation loop to find the correct BUCK_IRIP ($I_{BUCK_{peak}}$) setpoint.

When buck is enabled sooner than app. 12 ms elapses from previous disabling (typical example is PWM dimming off time), the regulation starts from the correct BUCK_IRIP ($I_{BUCK_{peak}}$) setpoint found during previous run and no transition effect is present.

Buck Current and Ripple Calibration Principle

Average current calibration is performed internally by the NCV78935 without interaction of user software. Quadratic approximation, which is basically required to compensate current dependency over full temperature range, is divided into three linear intervals. Currently measured VTEMP temperature is used as input of the algorithm together with array of constants in EEPROM calibrated during ATE test.

Example of bilinear interpolation of quadratic approximation of BUCKx_IAVG is depicted in Figure 19, BUCKx_IAVG = 192 = 75% of current range, BUCKx_IAVGCy_CAL = 350, BUCKx_IAVGHy_CAL = 400, BUCKx_IAVOCy_CAL = 150, BUCKx_IAVOHy_CAL = 100, BUCK_KQ_CAL = 7.75, TEMPCODEC = 200 and TEMPCODEH = 400.

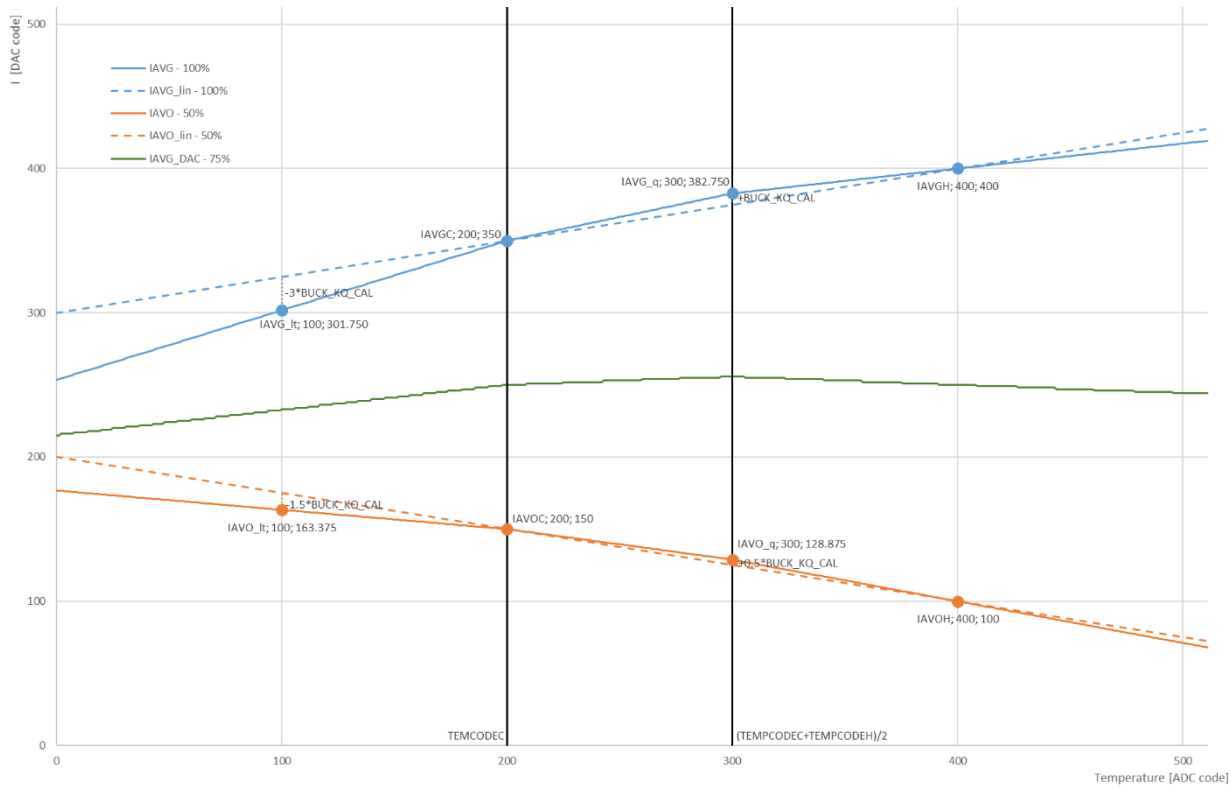

Figure 19. Bilinear Interpolation of BUCKx_IAVG

Paralleling the Bucks for Higher Current Capability

Different buck channels can be paralleled at the module output (after the buck inductors) for *higher current capability* on a unique channel, summing up together the individual DC currents.

Dimming

The NCV78935 supports both analog and digital dimming (or so called PWM dimming). Analog dimming is performed by controlling the LED amplitude current during operation. This can be done by means of changing the average current level (see Buck Regulator section).

In this section, we only describe PWM dimming as this is the preferred method to maintain the desired LED color temperature for a given current rating. In PWM dimming, the LED current waveform frequency is constant and the duty cycle is set according to the required light intensity. In order to avoid the beats effect, the dimming frequency should be set at “high enough” values, typically above 300 Hz.

Share Feedback
Your Opinion Matters

The device handles two distinct PWM dimming mode: *external* or *internal*.

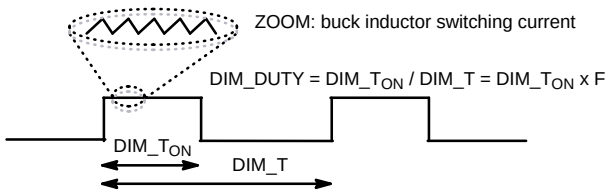

Figure 20. Buck Current Digital or PWM Dimming

External Dimming

The two/three independent control inputs LEDCTRLx handle the dimming signals for the related channel "x". In external dimming, the buck activation is transparently linked to the logic status of the LEDCTRLx pins. The only difference is the controlled phase shift of typical 4 µs (Table 6 "5 V TOLERANT DIGITAL INPUTS (SCLK, CSB, SDI, LEDCTRL1, LEDCTRL2, LEDCTRL3)") that allows synchronized measurements of the VLEDx pins via the ADC (see dedicated section for more details). As the phase shift is applied both to rising edges and falling edges, with a very limited jitter, the PWM duty cycle is not affected. Apart from the phase shift and the system clock OSC16M, there is no limitation to the PWM duty cycle values or resolutions at the bucks, which is a copy of the reference provided at the inputs.

Internal Dimming

This mode is applied by means of BUCKx_DIM_DUTY[7:0] registers for corresponding channel. There is exponential dependency of the applied duty ratio on the BUCKx_DIM_DUTY[7:0] register value:

$$\text{Duty Ratio [–]} = 2^{\frac{\text{BUCKx_DIM_DUTY[7:0]} - 255}{16}} \qquad \text{(eq. 11)}$$

Or in percentage:

$$\text{Duty Ratio [\%]} = 100 \times 2^{\frac{\text{BUCKx_DIM_DUTY[7:0]} - 255}{16}} \qquad \text{(eq. 12)}$$

The dimming PWM frequency is common among the channels and is programmable via the SPI parameter BUCK_DIM_FREQ[1:0] (in register 0x0D), as displayed in the table below. All frequencies are chosen sufficiently high to avoid the beads effect in the application. Please also note that the higher the frequency, the lower the voltage drop on the booster output due to the lower load power step.

Table 12. INTERNAL PWM DIMMING PROGRAMMABLE FREQUENCIES

BUCK_DIM_FREQ[1:0]	PWM Frequency (Hz)
0	244
1	488
2	977
3	1953

The phase shift between the channels during internal dimming can be controlled by programming the bit BUCKx_DIM_SHIFT for corresponding channel.

Table 13. INTERNAL PWM DIMMING PROGRAMMABLE PHASE SHIFT ON NCV78935

BUCKx_DIM_SHIFT[1:0]	BUCKx Phase Shift
0	0°
1	120°
2	180°
3	240°

Fading

Fading feature performs smooth transitions between different duty ratios. Fading effect is enabled when BUCKx_DIM_FADEIN[2:0] or BUCKx_DIM_FADEOUT[2:0] is different from 0. BUCKx_DIM_FADE status flag being 1 indicates that fading effect is in progress.

Fade in effect (increasing of the brightness) is started and performed when newly written value in BUCKx_DIM_DUTY[7:0] register is higher than current duty ratio. Applied duty ratio is then gradually increased by 1 with step duration defined by BUCKx_DIM_FADEIN[2:0] register.

Fade out effect (decreasing of the brightness) is started and performed when newly written value in BUCKx_DIM_DUTY[7:0] register is lower than current duty ratio. Applied duty ratio is then gradually decreased by 1 with step duration defined by BUCKx_DIM_FADEOUT[2:0] register:

Table 14. FADE IN/OUT PROGRAMMABLE STEP DURATION

BUCKx_DIM_FADEIN[2:0] or BUCKx_DIM_FADEOUT[2:0]	FADE IN/OUT Step Duration (µs)
0	FADE IN/OUT OFF
1	256
2	512
3	1024
4	2048
5	4096
6	8192
7	16384

Fade in and fade out effects are functional also when output is activated/deactivated by LEDCTRLx pin. Fade in effect then starts with zero duty ratio and ends at duty ratio corresponding to BUCKx_DIM_DUTY[7:0] register value. Fade out effect starts at duty ratio corresponding to BUCKx_DIM_DUTY[7:0] register value and ends at zero duty ratio.

Share Feedback
Your Opinion Matters

Required Enable/Disable Sequences and Enhanced Dimming Control

Case 1: Controlling the Buck Channels via LEDCTRLx Pins
The Buck channel with register BUCKx_DIM_SHIFT[1:0] programmed to value different from 0 must not be switched off by LEDCTRLx pin as the last from all channels. When BUCKx_DIM_FADEOUT[2:0] is different from 0, this constraint does not apply.

Case 2: Activating the Buck Channels via SPI Commands
The BUCKx_DIM_DUTY[7:0] can be set to 255 only after BUCKx_EN is set to 1 when BUCKx_DIM_FADEIN[2:0] is different from 0. Recommended sequence is then: BUCKx_EN=0 → BUCKx_DIM_DUTY[7:0]=0 → BUCKx_EN=1 → BUCKx_DIM_DUTY[7:0]=255. When BUCKx_DIM_FADEIN[2:0]=0, this constraint does not apply.

Case 3: Transition of Control Method from SPI to LEDCTRLx Pins via LEDCTRLx_MD[1:0] Register
When BUCKx_DIM_FADEIN[2:0] is different from 0 and LEDCTRLx_MD[1:0] is changed from 'Ignored' to 'Normal' (also via using EEPROM and FSO mode), the transition on LEDCTRLx pin is required to recover and synchronize the correct state of LEDCTRLx pin.

In LEDCTRLx_MD[1:0] transition from 'Ignored' to 'Inverted', the LEDCTRLx pin state is synchronized immediately.

When BUCKx_DIM_FADEIN[2:0]=0, the LEDCTRLx pin state is synchronized immediately after LEDCTRLx_MD[1:0] transition from 'Ignored' to 'Normal'.

Buck Diagnostic Description

- *Open LEDx String*: individual open LED diagnostic flags indicate whether the "x" string is detected open. The detection is based on a counter overflow of typical 50 µs when the related channel is activated. BUCKx_OPENLED flags (non-latched) are contained in status registers 0x21, 0x28 and 0x2F. Please note that the open detection does not disable the buck channel(s).

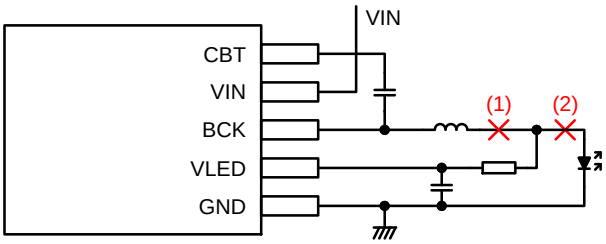

Figure 21. OPENLED Failure

- *Short LEDx String*: a short circuit detection is available independently for each LED channel per means of the flag BUCKx_SHORTLED (non-latched, status registers 0x21, 0x28 and 0x2F). The detection is based on the voltage measured at the VLEDx pins via a dedicated internal comparator: when the voltage drops below the VLEDLOW threshold (typical 1.0 V) the related flag is set. Note that the detection is inactive during first 5, 1, 10 (defined by BUCKx_SHORTLED_MASK[1:0]) switching periods after Buck regulation start. SHORTLED detection is disabled when BUCKx_SHORTLED_MASK[1:0] = 3.

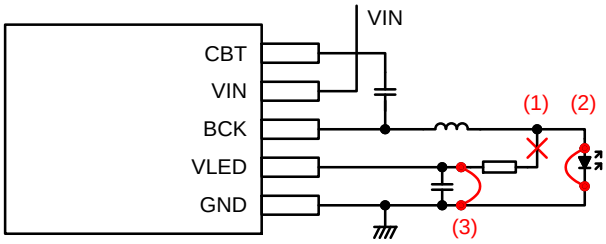

Figure 22. SHORTLED Failure

Table 15. SHORTLED DETECTION SETTINGS

BUCKx_SHORTLED_MASK [1:0]	SHORTLED Detection Masked (After Buck Regulation Start)
0	During first 5 periods
1	During first period
2	During first 10 periods
3	SHORTLED detection disabled

- *LEDx Overcurrent*: being a current regulator, the NCV78935 buck is by nature preventing overcurrent in all normal situations. However, in order to protect LEDx and the buck channel x electronics from overcurrent even in case of failures, protection mechanism is available. It is based on monitoring of 8 consecutive buck periods with min Ton time. As the overcurrent is detected, the Buck channel is switched off and corresponding SPI error flag BUCKx_OVLD (latched, status registers 0x21, 0x28 and 0x2F) is raised. Buck is kept continuously off until next re-enabling of the channel, what can be done by writing BUCKx_EN SPI signal to 0 followed by writing the BUCKx_EN to 1. After re-enabling, the Buck will try to regulate the current again. SPI error flag BUCKx_OVLD can be cleared by reading out corresponding register after channel was disabled by writing BUCKx_EN to 0.

Share Feedback
Your Opinion Matters

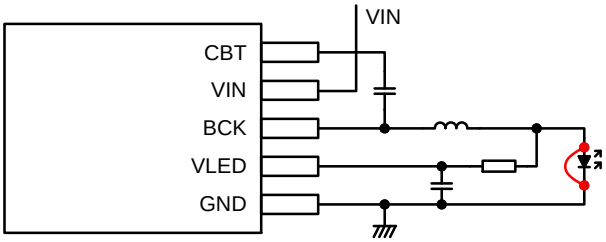

Figure 23. LED Overcurrent Failure

Automatic recovery feature is available for BUCKx_OVLD protection. This can be especially useful in FSO/Stand alone mode. The feature is controlled for both protections by common register BUCKx_RCVR[1:0] according to table below:

Table 16. AUTOMATIC RECOVERY FOR BUCKx_OVLD PROTECTION

BUCKx_RCVR [1:0]	Time between Attempts (ms)	# of Attempts
0	Auto-recovery OFF	0
1	8	3
2	65	3
3	65	Infinity

- *Short on the BCK node/Buck switch overload*: this protection is based on sensing of the voltage drop over the top switch just after the switch-on sequence and comparing it with maximum allowed threshold. Buck output then goes off and corresponding SPI error flag BUCKx_OVLD (latched, status registers 0x21, 0x28 and 0x2F) is raised after the overload situation in detected for two consecutive buck periods. Buck is kept continuously off until next re-enabling of the channel, what can be done by writing BUCKx_EN SPI signal to 0 followed by writing the BUCKx_EN to 1. After re-enabling, the Buck will try to regulate the current again. SPI error flag BUCKx_OVLD can be cleared by reading out corresponding register after channel was disabled by writing BUCKx_EN to 0.

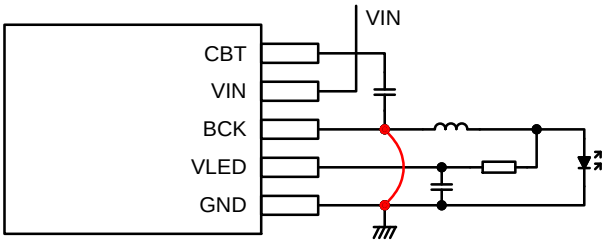

Figure 24. Buck Switch Overload Failure

Automatic recovery feature is available for BUCKx_OVLD protection as summarized by Table 16.

- *Undervoltage/Reset on floating domain*: this protection monitor whether the voltage on CBT capacitor is sufficient to guarantee proper operation of floating domain circuits. If drop of the voltage below VPOROFF (see Table 6 “BUCK REGULATOR − CBT RECHARGE CIRCUIT”) is detected, the Buck is disabled and corresponding SPI error flag BUCKx_CBT_UV (non-latched, status registers 0x21, 0x28 and 0x2F) is raised.

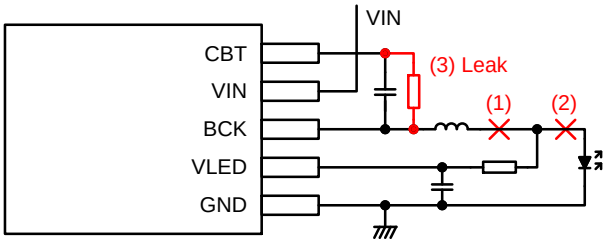

Figure 25. CBT_UV Protection

- *Overvoltage on CBT domain*: this protection mechanism monitors whether voltage on CBT capacitor is not too high to guarantee correct operation. In case the voltage exceeds CBTOV threshold (see Table 6 “BUCK REGULATOR − CBT RECHARGE CIRCUIT”), the Buck is disabled and corresponding SPI error flag BUCK_CBT_OV (latched, status registers 0x21, 0x28 and 0x2F) is raised.

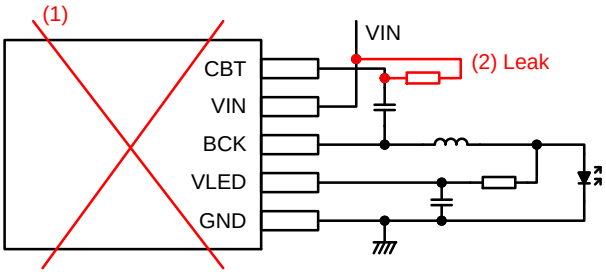

Figure 26. CBT_OV Failure

- *Buckx Running at Minimum TON Time*: registers BUCKx_MIN_TON (latched, status registers 0x21, 0x28 and 0x2F) indicate that minimal TON time is detected on the corresponding channel. TON time is so short that neither Average nor Peak current comparison could be reliably performed and as a result the output current is not in regulation and under the control by Buck regulator. BUCKx_MIN_TON is clear by read flag.
- *Buckx Zero Cross Event detection*: registers BUCKx_ZCDMODE (status registers 0x21, 0x28 and 0x2F) indicate that Zero Cross event was detected by Zero Cross detector.

Share Feedback
Your Opinion Matters

- *Buckx Status*: registers BUCKx_RUNNING (non-latched, status registers 0x21, 0x28 and 0x2F) show the current status of Buckx output. When BUCKx_RUNNING is 1, the corresponding output regulates current to the LED.
- *Buck switch local thermal shutdown*: registers BUCKx_TSD (latched, status registers 0x21, 0x28 and 0x2F) indicate that the local temperature of the Buck switch exceeded allowed threshold. The Buck switch thermal shutdown level is not user programmable and is factory trimmed (see BUCKTSD in Table 6 "ADC FOR MEASURING VIN1, VIN2, VIN3, VCC, VDRV, VINT, VLED1, VLED2, VLED3, TEMP"). This protection is implemented to protect the Buck power switch from too high temperature, which however impacts only its Ron resistance. Other analog blocks are at much lower temperature due to temperature gradient. Buck outputs are re-enabled automatically if BUCKx_TSD_RCVR = 1 when temperature drops below THERMAL_WARNING_THR[8:0] threshold, respectively can be re-enabled by rising edge on BUCKx_EN if BUCKx_TSD_RCVR = 0.
- *LEDCTRLx Pin Monitor*: registers LEDCTRLx_MON[1:0] (latched, status registers 0x21, 0x28 and 0x2F) indicate the actual logic level of the debounced LEDCTRLx pins. These signals follow the output of 250 ns digital debouncers implemented on LEDCTRLx pins. LEDCTRLx_MON[0] is set when "log. 0" on LEDCTRLx pin is detected. LEDCTRLx_MON[1] is set when "log. 1" on LEDCTRLx pin is detected. These flags are latched and stay set until they are cleared by reading of appropriate register. By this mean it is also possible to detect e.g. PWM dimming.
- *Buckx TOFF Monitor*: registers BUCKx_TOFF_MON[6:0] (status registers 0x22, 0x29 and 0x30) monitor regulated or set $T_{OFF} \cdot V_{COIL}$ parameter (physically corresponding to inductor current ripple).
- *TOFF Updated*: registers BUCKx_TOFF_UPD (latched, status registers 0x22, 0x29 and 0x30) inform, that corresponding BUCKx_TOFF[8:0] register was updated with current measurement result. BUCKx_TOFF_UPD is clear by read flag.
- *Regulated IRIP value*: registers BUCKx_IRIP[8:0] (status registers 0x22, 0x29 and 0x30) provide information about " $I_{BUCK_{peak}} - I_{BUCK_{AVG}}$" value regulated by internal algorithm for average current regulation.
- *IRIP Updated*: registers BUCKx_IRIP_UPD (latched, status registers 0x22, 0x29 and 0x30) inform, that corresponding BUCKx_IRIP[8:0] register was updated with current measurement result. Update should happen at each Buck period end. BUCKx_IRIP_UPD is clear by read flag.
- *Buckx TOFF Time Duration*: registers BUCKx_TOFF_DUR[9:0] (status registers 0x25, 0x2C and 0x33) reflect the last measured Buckx TOFF time (1LSB = 62.5 ns) on the corresponding channel.
- *Buckx TON Time Duration*: registers BUCKx_TON_DUR[9:0] (status registers 0x25, 0x2C and 0x33) reflect the last measured Buckx TON time (1LSB = 62.5 ns) on the corresponding channel. Maximum value is 800 (corresponds to 50 μs). When Buckx runs with TON time < typ. 62.5 ns, the BUCKx_TON_DUR[9:0] SPI register returns value 0x0. When Buckx is stopped, the BUCKx_TON_DUR[9:0] register keeps the last measured TON time.
- *TOFF and TON Times Updated*: registers BUCKx_T_UPD (latched, status registers 0x25, 0x2C and 0x33) inform, that corresponding BUCKx_TOFF_DUR[9:0] and BUCKx_TON_DUR[9:0] registers were updated with current measurement result. BUCKx_T_UPD is clear by read flag.
- *Icoil*: registers BUCKx_ICOIL[7:0] (status registers 0x26, 0x2D and 0x34) reflect actual value of Average current. It is calculated as BUCKx_IAVG_DAC[8:0] x *BUCKx_ICOIL_RAT* (ratio of the time when current is flowing through the coil and time of Buck period). In continuous current mode (where current does not drop to zero and is flowing through the coil whole Buck period), the *BUCKx_ICOIL_RAT* is 1. When Buck runs in BCM or DCM mode, the *BUCKx_ICOIL_RAT* will contain values from 0 to 1 according to detected ratio.
- *Icoil Updated*: registers BUCKx_ICOIL_UPD (latched, status registers 0x26, 0x2D and 0x34) inform, that corresponding BUCKx_ICOIL[7:0] register was updated with measurement result. BUCKx_ICOIL_UPD is clear by read flag.
- *IAVG DAC*: registers BUCKx_IAVG_DAC[8:0] (status registers 0x27, 0x2E and 0x35) reflect value of internal IAVG register after calibration with currently measured temperature VTEMP.
- *IRIP DAC*: registers BUCKx_IRIP_DAC[8:0] (status registers 0x27, 0x2E and 0x35) reflect value of internal IRIP register after calibration with currently measured temperature VTEMP.

A short summary table of the main diagnostic bits related to the LED outputs follows.

Share Feedback
Your Opinion Matters

Table 17. LED OUTPUTS DIAGNOSTIC SUMMARY

Diagnose		Detection Level	LED Output	Latched
Flag	**Description**			
SPIERR	SPI error	See SPI section	Not Disabled	Yes
TW	Thermal Warning	SPI register programmable	Not Disabled (if no TSD or BUCKx_TSD, otherwise disabled)	Yes
TSD	Thermal Shutdown	Factory trimmed	Disabled (automatically re-enabled when temp falls below TW and BUCKx_TSD_ RCVR = 1)	Yes
BUCKx_TSD	Buck Switch Local Thermal Shutdown	Factory trimmed	Disabled (automatically re-enabled when temp falls below TW and BUCKx_TSD_ RCVR = 1)	Yes
BUCKx_OPENLED	Open LED string	Buck on time > 50 μs	Not Disabled	No
BUCKx_SHORTLED	Shorted LED string	VLEDx < VLEDLOW	Not Disabled	No
BUCKx_OVLD	LED string overcurrent	8 consecutive periods with min Ton time	Disabled Automatic recovery available by means of BUCKx_RCVR [1:0]	Yes
	Buck switch overload	2 consecutive periods above overload threshold	Disabled Automatic recovery available by means of BUCKx_RCVR [1:0]	Yes
BUCKx_CBT_UV	CBT domain reset	VCBTx < VPOROFF	Disabled	No
BUCKx_CBT_OV	CBT domain overvoltage	VCBTx > CBTOV	Disabled	Yes
BUCKx_MIN_TON	Buck minimum Ton time	Min Ton time detected	Not disabled	Yes

General Diagnostic Description

- *Thermal Warning*: this mechanism detects a user-programmable junction temperature which is in principle close, but lower, to the chip maximum allowed, thus providing the information that some action (power de-rating) is required to prevent overheating that would cause Thermal Shutdown. A typical power de-rating technique consists in reducing the output dimming duty cycle in function of the temperature: the higher the temperature above the thermal warning, the lower the duty cycle. The thermal warning flag (TW) is given in status register 0x20 and is latched. When VTEMP[8:0] raises to or above THERMAL_WARNING_THR[8:0] threshold, the TW flag is set. At power up the default thermal warning threshold is typically 150 °C (20 codes below TSD level).
- *Thermal Shutdown*: this safety mechanism intends to protect the device from damage caused by overheating, by disabling the buck channels. The diagnostic is displayed per means of the TSD bit in status register 0x20 (latched). Once occurred, the thermal shutdown condition is exited when the temperature drops below the thermal warning level, thus providing hysteresis for thermal shutdown recovery process. Buck outputs are re-enabled automatically if BUCKx_TSD_RCRV = 1, respectively can be re-enabled by rising edge on BUCKx_EN if BUCKx_TSD_RCRV = 0. The application thermal design should be made as such to avoid the thermal shutdown in the worst case conditions. The thermal shutdown level is not user programmable and is factory trimmed (see TSD in Table 6 “ADC FOR MEASURING VIN1, VIN2, VIN3, VCC, VDRV, VINT, VLED1, VLED2, VLED3, TEMP).
- *SPI Error*: in case of SPI communication errors the SPIERR bit in status register 0x20 is set. The bit is latched. For more details, please refer to section “SPI Framing Error”.
- *EEPROM Error*: in case of read or write error during manipulation with EEPROM memory, the EEPROMERR bit in status register 0x20 is set. EEPROMERR is logical OR of EEPROM_WRITEFAIL and EEPROM_READFAIL errors.
- *Trimming Error*: TRIMERR bit in status register 0x20 is set when CRC_EEPROM_TRIM or CRC_EEPROM_CAL error is detected.
- *Command Reject*: CMD_REJECT bit in status register 0x20 is set when any EEPROM operation or write into EEPROM_DATA_WRITE[19:0] register is not accepted or when trial to write into SPI registers (except SWRESET, FSO_ENTER, FSO_EXIT, FSO_WDG_ENA[1:0] and FSO_WDG_CFG[1:0]) in FSO mode is made and rejected.
- *HW Reset*: the out of reset condition is reported through the HWR bit (latched, status register 0x20). This bit is set after each Power On Reset (POR) or SW reset (by SWRESET bit) and indicates the device is ready to operate.
- *FSO Mode*: presence in FSO mode is reported through the FSO bit in status register 0x20.
- *Frame Counter*: when valid SPI frame is received by the device, the register FRAME_CNT[3:0] (status register

Share Feedback
Your Opinion Matters

0x20) is incremented. When current value of the counter is 15, it will overflow to 0 after next valid SPI frame is received.

- *CSB Duration*: register CSB_DUR[19:0] (status registers 0x3D) reflects the last measured duration of CSB low pulse. CSB low pulse will be measured even in case of invalid SPI frame. Resolution of the register is 1LSB = 62.5 ns. If CSB low pulse is longer than maximum what can be held by CSB_DUR[19:0] register (~65.5 ms), the register will keep maximum value.

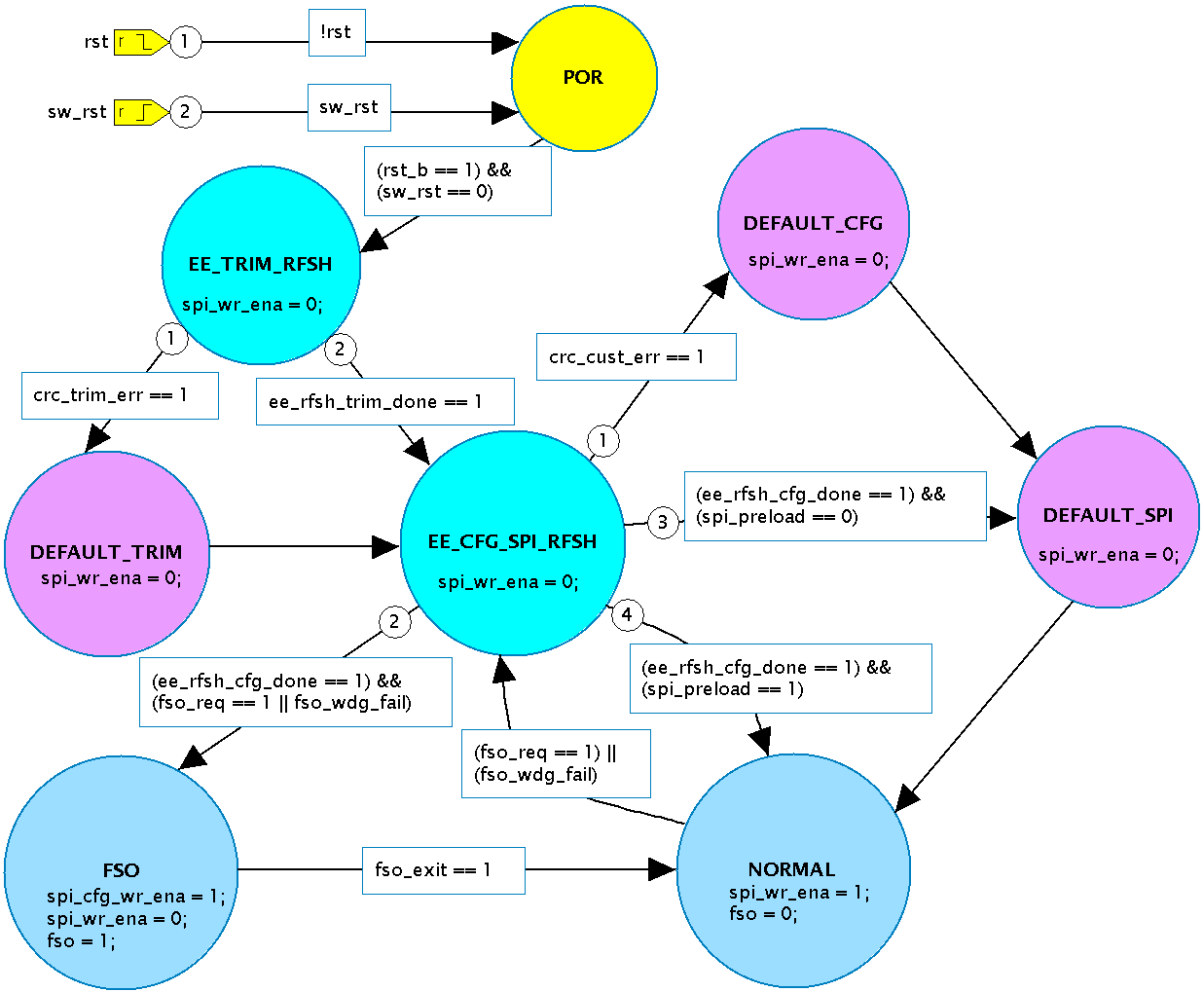

Figure 27. Functional Modes State Diagram

Reset

Asynchronous reset is caused either by POR (POR always causes asynchronous reset − transition to reset state) or by SWRESET SPI bit being written to 1.

Init and Normal Mode/FSO Mode

After the Reset, Trimming and Calibration constants are loaded from EEPROM into shadow registers and CRC check is performed. CRC check of trimming and calibration constants in shadow registers is performed also after each VTEMP measurement.

When EEPROM preload and CRC check of trimming constants in shadow registers fails also after the second trial, the CRC_EEPROM_TRIM (trimming data CRC check) error is raised and default trimming values are loaded into trimming shadow registers.

Calibration data are preloaded into shadow registers and CRC check is performed also after change of BUCKx_IRNG SPI register.

When CRC_EEPROM_TRIM (trimming data CRC check) or CRC_EEPROM_CAL (calibration data CRC check) error is detected, SPI flag TRIMERR at address 0x20 is set to 1.

Configuration registers FSO_ENTER, FSO_WDG_ENA[1:0] and FSO_WDG_CFG[1:0] are loaded from EEPROM into SPI registers after the reset before entrance into FSO or Normal mode.

SPI bit FSO_ENTER controls entrance into FSO mode; if register value is 1, FSO mode will be entered, otherwise Normal mode will be entered.

Share Feedback
Your Opinion Matters

Configuration register SPI_PRELOAD (EEPROM address 0x10), which is loaded from EEPROM after the reset, controls whether in Normal mode SPI registers will be loaded with values from EEPROM (addresses from 0x10 to 0x1B) or with default SPI values. When SPI_PRELOAD is 1, SPI registers will be preloaded from EEPROM and this mode can be referred as Stand-Alone mode.

Customer EEPROM data are protected by CRC_EEPROM_CUST CRC check. When CRC_EEPROM_CUST (customer data CRC check) error is detected, SPI register EEPROM_READFAIL is set to 1 and default values will be loaded into SPI control registers.

Fail-Safe Operation Mode

FSO (Fail-Safe Operation) mode can be used for the purpose of **Fail-Safe** functionality (chip functionality definition in fail-safe mode when the external microcontroller functionality is not guaranteed).

FSO mode is entered in the following situations:

- After POR when control registers are preloaded and FSO_ENTER contains 1,
- From Normal mode when rising edge on FSO_ENTER SPI bit is detected and at the same moment SPI bit FSO_EXIT is 0,
- From Normal mode when Watchdog time-out elapses (indicated by FSO_WDG_FAIL).

When transitioning into FSO mode, the EEPROM refresh is performed. Please note, that when CRC error has been detected, SPI register EEPROM_READFAIL is set to 1, FSO mode is not entered and default values are loaded into SPI registers.

FSO mode can be exited when rising edge on FSO_EXIT SPI bit is detected and at the same moment SPI bit FSO_ENTER is 0.

FSO bit in status register 0x20 (and its mirror in SPI frame) is set to 1 when device is inside the FSO mode. FSO status bit is 0 outside the FSO mode.

In FSO mode write operations are allowed to SWRESET, FSO_ENTER, FSO_EXIT, FSO_WDG_ENA[1:0] and FSO_WDG_CFG[1:0] control registers at address 0x1D.

Stand-Alone Mode

Stand-Alone modes can be used for the purpose of default power-up operation of the chip (**Stand-Alone** functionality without external microcontroller or preloading of the registers with default content for default operation before microcontroller starts sending SPI commands for chip settings).

Stand-Alone mode is in fact Normal mode where SPI registers were preloaded from EEPROM after the reset and is entered in the following situation:

- After POR when configuration register SPI_PRELOAD, which is loaded from EEPROM, contains 1.

During SPI preload, the EEPROM refresh is performed. Please note, that when CRC error has been detected, SPI register EEPROM_READFAIL is set to 1 and default values are loaded into SPI registers.

FSO Watchdog

Watchdog is restarted each time the valid SPI frame is received. When Watchdog is not properly restarted and time-out elapses, transition into FSO mode is started.

The watchdog can be configured and activated according to Table 18:

Table 18. WATCHDOG MODES

FSO_WDG_ENA [1:0]	Description
0	Watchdog disabled
1	Watchdog enabled after the first valid SPI frame
2	Watchdog enabled after NORMAL mode entrance
3	Watchdog enabled after NORMAL mode entrance with timeout 258.048 ±4.096 ms until the first valid SPI frame

FSO_WDG_CFG[1:0] control register defines the watchdog time-out:

Table 19. WATCHDOG TIME-OUT

FSO_WDG_CFG [1:0]	Min Timeout (ms)	Max Timeout (ms)
0	24.576	32.768
1	57.344	65.536
2	122.880	131.072
3	253.952	262.144

Failure Output

SDO pin can be used as failure indicator (active low) when at least one of the SPI bits BUCKx_FAIL_OUT at address 0x1D is set to 1.

SDO output will be asserted low when the following condition persists for more than 49 ms:

not SDO = (CSB pin = 1) and ((*BCK1ERR* and *buck1_active* and BUCK1_FAIL_OUT) or (*BCK2ERR* and *buck2_active* and BUCK2_FAIL_OUT) or (*BCK3ERR* and *buck3_active* and BUCK3_FAIL_OUT))

Please note that *BCK1ERR*, *BCK2ERR* and *BCK3ERR* are used also in SPI read frame in FAILURE_FLAGS[5:0] section, please see SPI Read Frame description for more details.

Meaning of the *BCK1ERR*, *BCK2ERR* and *BCK3ERR* is the following:

BUCKxERR = BUCKx_OVLD or BUCKx_CBT_UV_DEB or BUCKx_TSD or TSD or (BUCKx_OPENLED and BUCKx_OPENLED_FMASK) or (BUCKx_SHORTLED and BUCKx_SHORTLED_FMASK) or (BUCKx_REGSTATUS = 1 and BUCKx_REGFAIL_FMASK), where *BUCKx_CBT_UV_DEB* is set when BUCKx_CBT_UV lasts 500 ms and more

Share Feedback
Your Opinion Matters

Meaning of the *buck1_active*, *buck2_active* and *buck3_active* is the following:
buckx_active = BUCKx_EN and ((LEDCTRLx pin xor LEDCTRLx_MD[0]) or LEDCTRLx_MD[1])

SPI INTERFACE

General

The serial peripheral interface (SPI) is used to allow an external microcontroller (MCU) to communicate with the device. NCV78935 acts always as a slave and it cannot initiate any transmission. The operation of the device is configured and controlled by means of SPI registers, which are observable for read and/or write from the master. The NCV78935 SPI transfer size is 32 bits. Maximum communication SPI speed supported by NCV78935 is 4 MHz.

During an SPI transfer, the data is simultaneously transmitted (shifted out serially) and received (shifted in serially). A serial clock line (CLK) synchronizes shifting and sampling of the information on the two serial data lines: DO and DI. The DO signal is the output from the Slave (NCV78935), and the DI signal is the output from the Master.

A slave or chip select line (CSB) allows individual selection of a slave SPI device in a time multiplexed multiple-slave system.

The CSB line is active low. If an NCV78935 is not selected, DO is in high impedance state and it does not interfere with SPI bus activities. When the CSB line is low, the DO output is configured as push-pull to support higher communication speeds.

Since the NCV78935 always clocks data out on the falling edge and samples data in on rising edge of clock, the MCU SPI port must be configured to match this operation.

The implemented SPI allows connection to multiple slaves by means of star connection (CSB per slave).

An SPI star connection requires a bus = (3 + N) total lines, where N is the number of Slaves used, the SPI frame length is 32 bits per communication.

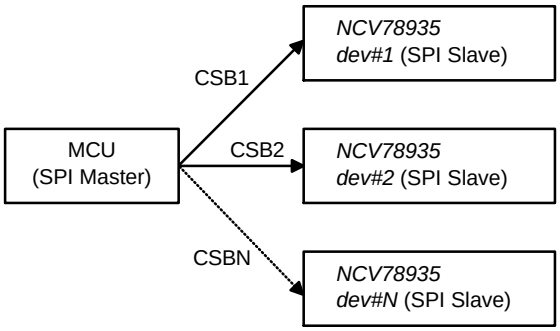

Figure 28. SPI Star Connection

SPI Transfer Format

Two types of SPI commands (to DI pin of NCV78935) from the micro controller can be distinguished: “Write to a control register” and “Read from register (control or status)”.

The frame protocol for the *write operation*:

Bits	[31]	[30:25]	[24:4]	[3:0]
SDI data	CMD	WRITE_ADDR[5:0]	WRITE_DATA[20:0]	CRC[3:0]
SDO data	SPIERR	LAST_ADDR[5:0]	LAST_DATA[20:0]	ECRC[3:0]

Figure 29. NCV78935 SPI Write Frame

Referring to the previous picture, the write frame coming from the master (into the DI) is composed from the following fields:

- Bit[31] (MSB): CMD bit = 1 for write operation,
- Bits[30:25]: 6 bits WRITE ADDRESS field,
- Bits[24:4]: 21 bit DATA to write,
- Bits[3:0]: CRC field computed over CMD, WRITE_ADDR and WRITE_DATA in shown order from MSB to LSB.

Device in the same time replies to the master (on the DO):

- Bit[31] (MSB): SPI ERROR bit set in case last received SPI frame was invalid,
- Bits[30:25]: 6 bit ADDRESS (WRITE_ADDR or READ_ADDR) transmitted in previous valid SPI frame,
- Bits[24:4]: 21 bit actual DATA stored on address LAST_ADDR,
- Bits[3:0]: ECRC (extended CRC) computed over SPIERR, LAST_DATA, LAST_ADDR, CMD (which has to be extended to 2 bits by one zero from left) and WRITE_ADDR in shown order from MSB to LSB.

In case the write operation is the first frame after power-on-reset, address of NOP register is used as LAST_ADDR.

If CRC in the frame is wrong, device will not perform command and <SPIERR> flag will be set.

Share Feedback
Your Opinion Matters

The frame protocol for the *read operation*:

Bits	[31]	[30:25]						[24:4]	[3:0]
SDI data	CMD	READ_ADDR[5:0]						IGNORED[20:0]	CRC[3:0]
SDO data	SPIERR	FAILURE_FLAGS[5:0]						READ_DATA[20:0]	ECRC[3:0]
		HWR	TW	FSO	BCK1ERR	BCK2ERR	BCK3ERR		

Figure 30. SPI Read Frame

Referring to the previous picture, the read frame coming from the master (into the DI) is composed from the following fields:

- Bit[31] (MSB): CMD bit = 0 for read operation,
- Bits[30:25]: 6 bits READ ADDRESS field,
- Bits[24:4]: 21 bits zeroes field,
- Bits[3:0]: 4 bits CRC field computed over CMD, READ_ADDR and IGNORED in shown order from MSB to LSB.

Device in the same frame provides to the master (on the DO):

- Bit[31] (MSB): SPI ERROR bit set in case last received SPI frame was invalid,
- Bits[30:25]: FAILURE_FLAGS[5:0] field composed from:
- HWR flag (mirror of HWR SPI flag),
- TW flag (mirror of TW SPI flag),
- FSO flag (mirror of FSO SPI flag),
- BCK1ERR fail status,
- BCK2ERR fail status,
- BCK3ERR fail status; please see Failure Output chapter to see details from which bits these fail status indicators are composed,
- Bits[24:4]: actual data from address READ_ADDR,
- Bits[3:0]: ECRC (extended CRC) computed over SPIERR, FAILURE_FLAGS, READ_DATA, CMD (which has to be extended to 2 bits by one zero from left) and READ_ADDR in shown order from MSB to LSB.

Read frame provides data from the required address to the output within the same frame (in frame response), thus achieving the lowest communication latency.

CRC Calculation

Received and transmitted frames are protected by CRC with following parameters:

- CRC length is 4 bits,
- CRC polynomial 0x9 (Koopman's notation; x4+x+1),
- CRC initialization value 0xF.

SPI Framing Error

SPI communication framing error is detected by the NCV78935 in the following situations:

- Number of CLK pulses received during the active-low CSB signal is different from 0 or 32;
- CRC calculated from all received bits is not equal to zero;
- Write operation to read only register was performed.

Once an SPI error occurs, the <SPIERR> flag can be reset only by reading the status register in which it is contained by valid SPI frame.

Share Feedback
Your Opinion Matters

CRC Code Example

```
#include <stdint.h>

// Calculates 4 bit CRC from given data array "data" and data byte count "length". Returns 4 bit CRC value
uint8_t CalcCRCfromByteArray(uint8_t* data, uint8_t length) {
    static const uint8_t CRC_POLY = 0x03;   // Polynomial x^4 + x + 1 (0x03 Normal representation, 0x09 Koopman)
    static const uint8_t CRC_INIT = 0x0F;   // Initialization value

    uint8_t crc = 0;                        // CRC register
    uint8_t bit = 0;                        // Bit to be shifted into CRC register

    // Begin CRC calculation byte by byte
    for(uint8_t byteIdx = 0; byteIdx < length; byteIdx++) {
        if(byteIdx == 0) {
            // Initialize CRC register - Shift in the first 4 highest bits (starting from CMD),
            for(int8_t bitIdx = 7; bitIdx >= 4; bitIdx--) {
                bit = (data[byteIdx] >> bitIdx) & 0x01;
                crc = (crc << 1) | bit;
            }
            crc ^= CRC_INIT;                // XOR with CRC initial value
        }

        // Continue from bit 3...0 after Init in case of First byte is processed
        // Else process all 8 bits (7...0) of given byte
        for (int8_t bitIdx = (byteIdx == 0 ? 3 : 7); bitIdx >= 0; bitIdx--) {
            bit = (data[byteIdx] >> bitIdx) & 0x01;
            crc = (crc << 1) | bit;
            if (crc & 0x10) {               // Check CRC register popout bit
                crc ^= CRC_POLY;
            }
        }
    }

    return (crc & 0x0F);                    // Return CRC - only the lower 4 bits
}

// CRC Calculation from masterOUT message
uint8_t CalcCRC(uint32_t masterOUT) {
    // Create data byte array with expected structure for CRC calculation
    uint8_t data[4] = {0};                  // 4 data bytes
    data[0] = (masterOUT >> 24) & 0xFF;     // Bits 31...24 (31 = CMD)
    data[1] = (masterOUT >> 16) & 0xFF;     // Bits 23...16 (23 = write_data/ignored[19])
    data[2] = (masterOUT >> 8) & 0xFF;      // Bits 15...8 (15 = write_data/ignored[11])
    data[3] = masterOUT & 0xF0;             // Bits 7...4   (7 = write_data/ignored[3])
                                            // Bits 3...0  (CRC padding = 0)
    return CalcCRCfromByteArray(data, 4);
}

// ECRC Calculation from device response (masterIN) and part of masterOUT message
uint8_t CalcECRC(uint32_t masterOUT, uint32_t masterIN) {
    // Create data byte array with expected structure for CRC calculation
    uint8_t data[5] = {0};                  // 5 data bytes
    data[0] = (masterIN >> 24) & 0xFF;      // Bits 39...32 (39 = SPIERR)
    data[1] = (masterIN >> 16) & 0xFF;      // Bits 31...24 (31 = last_/read_data[19])
    data[2] = (masterIN >> 8) & 0xFF;       // Bits 23...16 (23 = last_/read_data[11])
    data[3] = (masterIN & 0xF0) |           // Bits 15...12 (last_/read_data[3]...last_/read_data[0])
              (masterOUT >> 29) & 0x07;     // Bits 11...8  (11 = 0 (extended CMD), 10 = CMD)
    data[4] = ((masterOUT >> 25) & 0x0F) << 4;  // Bits 7...4   (write_/read_addr[3]...[0])
                                            // Bits 3...0   (ECRC calculation padding = 0)
    return CalcCRCfromByteArray(data, 5);
}

//*******************************************************************************//
// Example CRC/ECRC calculation - Read Register 0x3F (REVID) after device power up
// ...
uint32_t masterOUT = 0x7e000000;  // Master out message (CMD = 0; read_addr = 0x3F, CRC = 0 [placeholder])
uint8_t crc = CalcCRC(masterOUT); // Expected CRC result = 0x4
masterOUT |= (crc & 0x0F);        // Set lowest 4 bits to calculated CRC value (masterOUT = 0x7e000004)

// Write data to SPI while reading device in frame response (into masterIN variable)
uint32_t masterIN = spiTransfer(masterOUT);

// Expected  response of NCV78935 (0x4000408a) - HWR set; REVID = 0x408; ECRC = 0xA

uint8_t ecrc_response = (masterIN & 0x0F);         // Read lowest 4 bits of response - ECRC
uint8_t ecrc_calc = CalcECRC(masterOUT, masterIN); // Check ECRC validity (should match response ECRC)

if(ecrc_calc != ecrc_response) {
        // ...Handle ECRC error
}
// ...Process Device Response
// ...
```


Share Feedback
Your Opinion Matters

SPI ADDRESS MAP

ADDR	bit20	bit19	bit18	bit17	bit16	bit15	bit14	bit13	bit12	bit11	bit10	bit9	bit8	bit7	bit6	bit5	bit4	bit3	bit2	bit1	bit0
0 0x00	NOP[20:0]																				
1 0x01	BUCK1_DCM_CORR[2:0]			BUCK1_ZCD_DIS	BUCK1_TOFF[6:0]							BUCK1_IRNG		BUCK1_IAVG[7:0]							
2 0x02		BUCK1_TSD_RCVR	BUCK1_RCVR[1:0]		BUCK1_SHORTLED_MASK[1:0]		VLED1_RNG	BUCK1_IREG_PAUSE	BUCK1_FREQ_PAUSE	BUCK1_FREQ_RATE[1:0]		BUCK1_FREQ_RSP[1:0]		BUCK1_FREQ_FAST_RCVR	BUCK1_FREQ_ABOVE				BUCK1_FREQ[5:0]		
3 0x03				BUCK1_DIM_SHIFT[1:0]		BUCK1_DIM_FADEOUT[2:0]				BUCK1_DIM_FADEIN[2:0]					BUCK1_DIM_DUTY[7:0]					LEDCTRL1_MD[1:0]	
4 0x04																			BUCK1_REGFAIL_FMASK	BUCK1_OPENLED_FMASK	BUCK1_SHORTLED_FMASK
5 0x05		BUCK2_DCM_CORR[2:0]		BUCK2_ZCD_DIS	BUCK2_TOFF[6:0]								BUCK2_IRNG		BUCK2_IAVG[7:0]						
6 0x06		BUCK2_TSD_RCVR	BUCK2_RCVR[1:0]		BUCK2_SHORTLED_MASK[1:0]		VLED2_RNG	BUCK2_IREG_PAUSE	BUCK2_FREQ_PAUSE	BUCK2_FREQ_RATE[1:0]		BUCK2_FREQ_RSP[1:0]		BUCK2_FREQ_FAST_RCVR	BUCK2_FREQ_ABOVE				BUCK2_FREQ[5:0]		
7 0x07				BUCK2_DIM_SHIFT[1:0]		BUCK2_DIM_FADEOUT[2:0]				BUCK2_DIM_FADEIN[2:0]					BUCK2_DIM_DUTY[7:0]					LEDCTRL2_MD[1:0]	
8 0x08																			BUCK2_REGFAIL_FMASK	BUCK2_OPENLED_FMASK	BUCK2_SHORTLED_FMASK
9 0x09		BUCK3_DCM_CORR[2:0]		BUCK3_ZCD_DIS	BUCK3_TOFF[6:0]								BUCK3_IRNG		BUCK3_IAVG[7:0]						
10 0x0A		BUCK3_TSD_RCVR	BUCK3_RCVR[1:0]		BUCK3_SHORTLED_MASK[1:0]		VLED3_RNG	BUCK3_IREG_PAUSE	BUCK3_FREQ_PAUSE	BUCK3_FREQ_RATE[1:0]		BUCK3_FREQ_RSP[1:0]		BUCK3_FREQ_FAST_RCVR	BUCK3_FREQ_ABOVE				BUCK3_FREQ[5:0]		
11 0x0B				BUCK3_DIM_SHIFT[1:0]		BUCK3_DIM_FADEOUT[2:0]				BUCK3_DIM_FADEIN[2:0]					BUCK3_DIM_DUTY[7:0]					LEDCTRL3_MD[1:0]	
12 0x0C																			BUCK3_REGFAIL_FMASK	BUCK3_OPENLED_FMASK	BUCK3_SHORTLED_FMASK
13 0x0D																	BUCK_DIM_FREQ[1:0]		BUCK3_EN	BUCK2_EN	BUCK1_EN
14 0x0E																					
15 0x0F																					
16 0x10																					
17 0x11																					
18 0x12																					
19 0x13																					
20 0x14																					
21 0x15																					
22 0x16																					
23 0x17																					
24 0x18																					
25 0x19																					
26 0x1A								OSC_CAL[4:0]					THERMAL_WARNING_THR[8:0]								
27 0x1B		EEPROM_DATA_WRITE[19:0]																			
28 0x1C													EEPROM_ADDRESS[4:0]						EEPROM_CTRL[3:0]		
29 0x1D												BUCK3_FAIL_OUT	BUCK2_FAIL_OUT	BUCK1_FAIL_OUT	FSO_WDG_CFG[1:0]		FSO_WDG_ENA[1:0]		FSO_EXIT	FSO_ENTER	SWRESET
30 0x1E																					
31 0x1F																					
32 0x20										TRIMERR	EEPROMERR	SPIERR	CMD_REJECT		FRAME_CNT[3:0]			TSD	TW	FSO	HWR
33 0x21							BUCK1_CBT_UVS	BUCK1_TSD	BUCK1_CBT_OV	BUCK1_CBT_UV	BUCK1_OPENLED	BUCK1_SHORTLED	BUCK1_OVLD	BUCK1_MIN_TON	BUCK1_ZCDMODE	LEDCTRL1_MON[1:0]		BUCK1_DIM_FADE	BUCK1_REGSTATUS[1:0]		BUCK1_RUNNING
34 0x22				BUCK1_TOFF_UPD	BUCK1_TOFF_MON[6:0]							BUCK1_IRIP_UPD	BUCK1_IRIP[8:0]								
35 0x23			VIN1[8:0]										VLED1[8:0]								
36 0x24			VLED1ON[8:0]										VLED1OFF[8:0]								
37 0x25	BUCK1_T_UPD	BUCK1_TOFF_DUR[9:0]										BUCK1_TON_DUR[9:0]									
38 0x26													BUCK1_ICOIL_UPD	BUCK1_ICOIL[7:0]							
39 0x27			BUCK1_IAVG_DAC[8:0]										BUCK1_IRIP_DAC[8:0]								
40 0x28							BUCK2_CBT_UVS	BUCK2_TSD	BUCK2_CBT_OV	BUCK2_CBT_UV	BUCK2_OPENLED	BUCK2_SHORTLED	BUCK2_OVLD	BUCK2_MIN_TON	BUCK2_ZCDMODE	LEDCTRL2_MON[1:0]		BUCK2_DIM_FADE	BUCK2_REGSTATUS[1:0]		BUCK2_RUNNING
41 0x29				BUCK2_TOFF_UPD	BUCK2_TOFF_MON[6:0]							BUCK2_IRIP_UPD	BUCK2_IRIP[8:0]								
42 0x2A			VIN2[8:0]										VLED2[8:0]								
43 0x2B			VLED2ON[8:0]										VLED2OFF[8:0]								
44 0x2C	BUCK2_T_UPD	BUCK2_TOFF_DUR[9:0]										BUCK2_TON_DUR[9:0]									
45 0x2D													BUCK2_ICOIL_UPD	BUCK2_ICOIL[7:0]							
46 0x2E			BUCK2_IAVG_DAC[8:0]										BUCK2_IRIP_DAC[8:0]								
47 0x2F							BUCK3_CBT_UVS	BUCK3_TSD	BUCK3_CBT_OV	BUCK3_CBT_UV	BUCK3_OPENLED	BUCK3_SHORTLED	BUCK3_OVLD	BUCK3_MIN_TON	BUCK3_ZCDMODE	LEDCTRL3_MON[1:0]		BUCK3_DIM_FADE	BUCK3_REGSTATUS[1:0]		BUCK3_RUNNING
48 0x30				BUCK3_TOFF_UPD	BUCK3_TOFF_MON[6:0]							BUCK3_IRIP_UPD	BUCK3_IRIP[8:0]								
49 0x31			VIN3[8:0]										VLED3[8:0]								
50 0x32			VLED3ON[8:0]										VLED3OFF[8:0]								
51 0x33	BUCK3_T_UPD	BUCK3_TOFF_DUR[9:0]										BUCK3_TON_DUR[9:0]									
52 0x34													BUCK3_ICOIL_UPD	BUCK3_ICOIL[7:0]							
53 0x35			BUCK3_IAVG_DAC[8:0]										BUCK3_IRIP_DAC[8:0]								
54 0x36																					
55 0x37																					
56 0x38																					
57 0x39																					
58 0x3A																					
59 0x3B			VCC[8:0]										VINT[8:0]								
60 0x3C			VDRV[8:0]										VTEMP[8:0]								
61 0x3D		CSB_DUR[19:0]																			
62 0x3E		EEPROM_DATA_READ[19:0]																			
63 0x3F					EEPROM_LOCK_CUST	EEPROM_WRITEFAIL	EEPROM_READFAIL	EEPROM_BUSY	REVID[12:0]												

	Write (Addresses 0x01 to 0x1F)
	Write FSO
	Read Only (Addresses 0x20 to 0x3F)
	Read Only Clear by Read
	NOP
	Unused - only zero shall be written

Figure 31. NCV78935 SPI Address Map

Default value of all SPI registers after POR is 0x00 if not specified explicitly.

SPI register SPI_REVID[12:0] is used to track the silicon version, following encoding mechanism is used:

- REVID[12:8]: Device ID for NCV78935 = 00100 [binary]
- REVID[7:6]: Option ID
- REVID[5:3]: Full Mask Version
- REVID[2:0]: Metal Tune

Table 20. SPI MAP BIT DEFINITION

Symbol	MAP Position	Description
REGISTER 0x00 (CR): NOP REGISTER		
NOP[20:0]	Bits [20:0] – ADDR_0x00	NOP Register (Read/Write Operation Ignored)
REGISTER 0x01 (BUCK1) OR 0x05 (BUCK2) OR 0x09 (BUCK3) (CR): BUCKx CONFIGURATION		
BUCK1_DCM_CORR[2:0]	Bits [20:18] – ADDR_0x01	Correction of the average current in DCM mode
BUCK1_ZCD_DIS	Bit 17 – ADDR_0x01	Disabling the Buck Zero Cross Detector
BUCK1_TOFF[6:0]	Bits [16:10] – ADDR_0x01	Buck Current Ripple (TOFF·VCOIL constant)
BUCK1_IRNG	Bit 8 – ADDR_0x01	Buck Current Range 0 or 1
BUCK1_IAVG[7:0]	Bits [7:0] – ADDR_0x01	Buck Average Current
REGISTER 0x02 (BUCK1) OR 0x06 (BUCK2) OR 0x0A (BUCK3) (CR): BUCKx CONFIGURATION		
BUCK1_TSD_RCVR	Bit 19 – ADDR_0x02	Automatic recovery of Buck after Thermal Shutdown (TSD) or Buck switch local thermal shutdown (BUCKx_TSD)
BUCK1_RCVR[1:0]	Bits [18:17] – ADDR_0x02	Automatic recovery of Buck after BUCKx_OVLD event
BUCK1_SHORTLED_MASK[1:0]	Bits [16:15] – ADDR_0x02	Disabling of Buck SHORTLED protection for first x periods
VLED1_RNG	Bit 14 – ADDR_0x02	LED string voltage measurement range: 70 V or 35 V
BUCK1_IREG_PAUSE	Bit 13 – ADDR_0x02	Pause of Buck Average current regulation (IRIP not updated)
BUCK1_FREQ_PAUSE	Bit 12 – ADDR_0x02	Pause of Buck Frequency regulation (TOFF not updated)
BUCK1_FREQ_RATE[1:0]	Bits [11:10] – ADDR_0x02	Buck Frequency regulation maximum regulation step in case FAST_RCVR is set to fast
BUCK1_FREQ_RSP[1:0]	Bits [9:8] – ADDR_0x02	Buck Frequency regulation minimal regulation response time
BUCK1_FREQ_FAST_RCVR	Bit 7 – ADDR_0x02	Buck Frequency regulation slow (0) or fast (1)
BUCK1_FREQ_ABOVE	Bit 6 – ADDR_0x02	Buck Frequency kept below or above programmed frequency
BUCK1_FREQ[5:0]	Bits [5:0] – ADDR_0x02	Buck Frequency
REGISTER 0x03 (BUCK1) OR 0x07 (BUCK2) OR 0x0B (BUCK3) (CR): BUCKx CONFIGURATION		
BUCK1_DIM_SHIFT[1:0]	Bits [17:16] – ADDR_0x03	Buck Internal dimming phase shift
BUCK1_DIM_FADEOUT[2:0]	Bits [15:13] – ADDR_0x03	Buck Fade Out settings
BUCK1_DIM_FADEIN[2:0]	Bits [12:10] – ADDR_0x03	Buck Fade In settings
BUCK1_DIM_DUTY[7:0]	Bits [9:2] – ADDR_0x03	Buck Internal dimming duty ratio
LEDCTRL1_MD[1:0]	Bits [1:0] – ADDR_0x03	Mode of LEDCTRL pin
REGISTER 0x04 (BUCK1) OR 0x08 (BUCK2) OR 0x0C (BUCK3) (CR): BUCKx CONFIGURATION		
BUCK1_REGFAIL_FMASK	Bit 2 – ADDR_0x04	Adding the REGSTATUS failure into BUCKxERR for Failure Output and for SPI read frame FAILURE_FLAGS[5:0] section
BUCK1_OPENLED_FMASK	Bit 1 – ADDR_0x04	Adding the OPENLED failure into BUCKxERR for Failure Output and for SPI read frame FAILURE_FLAGS[5:0] section
BUCK1_SHORTLED_FMASK	Bit 0 – ADDR_0x04	Adding the SHORTLED failure into BUCKxERR for Failure Output and for SPI read frame FAILURE_FLAGS[5:0] section
REGISTER 0x0D (CR): BUCK CONFIGURATION		
BUCK_DIM_FREQ[1:0]	Bits [4:3] – ADDR_0x0D	Buck Internal dimming frequency
BUCK2_EN	Bit 2 – ADDR_0x0D	Buck 3 Enable
BUCK2_EN	Bit 1 – ADDR_0x0D	Buck 2 Enable
BUCK1_EN	Bit 0 – ADDR_0x0D	Buck 1 Enable

Share Feedback
Your Opinion Matters

Table 20. SPI MAP BIT DEFINITION (continued)

Symbol	MAP Position	Description
REGISTER 0x1A (CR): OSCILLATOR CALIBRATION & THERMAL WARNING SETTINGS		
OSC_CAL[4:0]	Bits [13:9] − ADDR_0x1A	Calibration of the internal Oscillator. Signed, coded as two's complement
THERMAL_WARNING_THR[8:0]	Bits [8:0] − ADDR_0x1A	Thermal Warning Threshold Settings
REGISTER 0x1B (CR): EEPROM OPERATION		
EEPROM_DATA_WRITE[19:0]	Bits [19:0] − ADDR_0x1B	EEPROM Data to be Written
REGISTER 0x1C (CR): EEPROM OPERATION		
EEPROM_ADDRESS[4:0]	Bits [8:4] − ADDR_0x1C	EEPROM Address
EEPROM_CTRL[3:0]	Bits [3:0] − ADDR_0x1C	EEPROM Command
REGISTER 0x1D (CR): FSO MODE CONFIGURATION		
BUCK3_FAIL_OUT	Bit 9 − ADDR_0x1D	Providing the Buck 3 failure BUCK3ERR to Failure Output
BUCK2_FAIL_OUT	Bit 8 − ADDR_0x1D	Providing the Buck 2 failure BUCK2ERR to Failure Output
BUCK1_FAIL_OUT	Bit 7 − ADDR_0x1D	Providing the Buck 1 failure BUCK1ERR to Failure Output
FSO_WDG_CFG[1:0]	Bits [6:5] − ADDR_0x1D	Watchdog time-out configuration
FSO_WDG_ENA[1:0]	Bits [4:3] − ADDR_0x1D	Watchdog mode
FSO_EXIT	Bit 2 − ADDR_0x1D	FSO mode exit command
FSO_ENTER	Bit 1 − ADDR_0x1D	FSO mode enter command
SWRESET	Bit 0 − ADDR_0x1D	Software Reset
REGISTER 0x20 (SR): DIAGNOSTIC		
TRIMERR	Bit 11 − ADDR_0x20	Trimming or Calibration EEPROM data CRC check failed
EEPROMERR	Bit 10 − ADDR_0x20	Logical OR of EEPROM_WRITEFAIL and EEPROM_READFAIL errors
SPIERR	Bit 9 − ADDR_0x20	SPI Error Flag, Latched
CMD_REJECT	Bit 8 − ADDR_0x20	EEPROM operation or write into EEPROM_DATA_WRITE[19:0] register not accepted or trial to write not allowed SPI registers in FSO mode rejected, Latched
FRAME_CNT[3:0]	Bits [7:4] − ADDR_0x20	SPI Frame Counter
TSD	Bit 3 − ADDR_0x20	Thermal Shutdown Flag, Latched
TW	Bit 2 − ADDR_0x20	Thermal Warning Flag
FSO	Bit 1 − ADDR_0x20	FSO mode indicator
HWR	Bit 9 − ADDR_0x20	Hardware Reset Flag, Latched
REGISTER 0x21 (BUCK1) OR 0x28 (BUCK2) OR 0x2F (BUCK3) (SR): BUCKx DIAGNOSTIC		
BUCK1_TSD	Bit 13 − ADDR_0x21	BUCK Local Thermal Shutdown Flag, Latched
BUCK1_CBT_OV	Bit 12 − ADDR_0x21	CBT domain Overvoltage Failure, Latched
BUCK1_CBT_UV	Bit 11 − ADDR_0x21	CBT domain reset
BUCK1_OPENLED	Bit 10 − ADDR_0x21	Open LED string Failure
BUCK1_SHORTLED	Bit 9 − ADDR_0x21	Shorted LED string Failure
BUCK1_OVLD	Bit 8 − ADDR_0x21	LED string or Buck Switch Overcurrent Failure, Latched
BUCK1_MIN_TON	Bit 7 − ADDR_0x21	Buck minimum Ton time detected, output current not in regulation, Latched
BUCK1_ZCDMODE	Bit 6 − ADDR_0x21	Zero Cross event detected by Zero Cross detector
LEDCTRL1_MON[1:0]	Bits [5:4] − ADDR_0x21	LEDCTRL pin monitor, bit [0] set when "log. 0" detected, bit[1] set when "log. 1" detected, Latched
BUCK1_DIM_FADE	Bit 3 − ADDR_0x21	Fading effect in process
BUCK1_REGSTATUS[1:0]	Bits [2:1] − ADDR_0x21	Buck current regulation status
BUCK1_RUNNING	Bit 0 − ADDR_0x21	Buck status indicating that output regulates current to the LED

Share Feedback
Your Opinion Matters

Table 20. SPI MAP BIT DEFINITION (continued)

Symbol	MAP Position	Description
REGISTER 0x22 (BUCK1) OR 0x29 (BUCK2) OR 0x30 (BUCK3) (SR): BUCKx DIAGNOSTIC		
BUCK1_TOFF_UPD	Bit 17 − ADDR_0x22	BUCKx_TOFF_MON[6:0] register updated with measurement result, Latched
BUCK1_TOFF_MON[6:0]	Bits [16:10] − ADDR_0x22	Monitor of current TOFF·VCOIL parameter
BUCK1_IRIP_UPD	Bit 9 − ADDR_0x22	IRIP register updated with measurement result, Latched
BUCK1_IRIP[8:0]	Bits [8:0] − ADDR_0x22	IRIP (“$I_{BUCK_{peak}} - I_{PEAK_{AVG}}$”) value regulated by internal algorithm for average current regulation
REGISTER 0x23 (BUCK1) OR 0x2A (BUCK2) OR 0x31 (BUCK3) (SR): BUCKx DIAGNOSTIC		
VIN1[8:0]	Bits [18:10] − ADDR_0x23	Output of VIN ADC measurement
VLED1[8:0]	Bits [8:0] − ADDR_0x23	Output of VLED ADC measurement
REGISTER 0x24 (BUCK1) OR 0x2B (BUCK2) OR 0x32 (BUCK3) (SR): BUCKx DIAGNOSTIC		
VLED1ON[8:0]	Bits [18:10] − ADDR_0x24	Output of VLED ON ADC measurement
VLED1OFF[8:0]	Bits [8:0] − ADDR_0x24	Output of VLED OFF ADC measurement
REGISTER 0x25 (BUCK1) OR 0x2C (BUCK2) OR 0x33 (BUCK3) (SR): BUCKx DIAGNOSTIC		
BUCK1_T_UPD	Bit 20 − ADDR_0x25	BUCKx_TOFF_DUR[9:0] and BUCKx_TON_DUR[9:0] registers updated with measurement result, Latched
BUCK1_TOFF_DUR[9:0]	Bits [19:10] − ADDR_0x25	Buck Toff Time Duration
BUCK1_TON_DUR[9:0]	Bits [9:0] − ADDR_0x25	Buck Ton Time Duration
REGISTER 0x26 (BUCK1) OR 0x2D (BUCK2) OR 0x34 (BUCK3) (SR): BUCKx DIAGNOSTIC		
BUCK1_ICOIL_UPD	Bit 8 − ADDR_0x26	BUCKx_ICOIL[7:0] register updated with measurement result, Latched
BUCK1_ICOIL[7:0]	Bits [7:0] − ADDR_0x25	Actual value of Average current
REGISTER 0x27 (BUCK1) OR 0x2E (BUCK2) OR 0x35 (BUCK3) (SR): BUCKx DIAGNOSTIC		
BUCK1_IAVG_DAC[8:0]	Bits [18:10] − ADDR_0x27	Value of internal IAVG register after calibration with currently measured temperature VTEMP
BUCK1_IRIP_DAC[8:0]	Bits [8:0] − ADDR_0x27	Value of internal IRIP register after calibration with currently measured temperature VTEMP
REGISTER 0x3B (SR): ADC		
VCC[8:0]	Bits [18:10] − ADDR_0x3B	Output of VCC ADC measurement
VINT[8:0]	Bits [8:0] − ADDR_0x3B	Output of VINT ADC measurement
REGISTER 0x3C (SR): ADC		
VDRV[8:0]	Bits [18:10] − ADDR_0x3C	Output of VDRV ADC measurement
VTEMP[8:0]	Bits [8:0] − ADDR_0x3C	Output of VTEMP ADC measurement
REGISTER 0x3D (SR): DIAGNOSTIC		
CSB_DUR[19:0]	Bits [19:0] − ADDR_0x3D	Measured Duration of CSB low pulse
REGISTER 0x3E (SR): EEPROM		
EEPROM_DATA_READ[19:0]	Bits [19:0] − ADDR_0x3E	EEPROM Read Data
REGISTER 0x3F (SR): EEPROM & REVID		
EEPROM_LOCK_CUST	Bit 16 − ADDR_0x3F	EEPROM Customer Data Locked
EEPROM_WRITEFAIL	Bit 15 − ADDR_0x3F	EEPROM Data Write Failure
EEPROM_READFAIL	Bit 14 − ADDR_0x3F	EEPROM Data CRC check Failure, Latched
EEPROM_BUSY	Bit 13 − ADDR_0x3F	EEPROM Busy
REVID[12:0]	Bits [12:0] − ADDR_0x3F	Revision ID of the Device

Share Feedback
Your Opinion Matters

EEPROM MEMORY

	ADDR	D19	D18	D17	D16	D15	D14	D13	D12	D11	D10	D9	D8	D7	D6	D5	D4	D3	D2	D1	D0
16	0x10	BUCK_DI M_FREQ[1:0]		BUCK3_FAI L_OUT	BUCK2_FAI L_OUT	BUCK1_FAI L_OUT	FSO_WDG_CFG[1:0]		FSO_WDG_ENA[1:0]		FSO_ENTER	SPI_PRELOAD	THERMAL_WARNI NG_THR[8:0]								
17	0x11	BUCK1_FREQ_RATE[1:0]		BUCK1_TOFF[6:0]								BUCK1_I RNG	BUCK1_I AVG[7:0]								BUCK1_EN
18	0x12	BUCK1_TSD_RCVR	BUCK1_RCVR[1:0]		BUCK1_SHORTLED_MASK[1:0]		VLED1_RNG	LEDCTRL1_MD[1:0]		BUCK1_I REG_PAUSE	BUCK1_FREQ_PAUSE	BUCK1_FREQ_RSP[1:0]		BUCK1_FREQ_FAST_RCVR	BUCK1_FREQ_ABOVE	BUCK1_FREQ[5:0]					
19	0x13	BUCK1_DCM_CORR[2:0]			BUCK1_ZCD_DI S	BUCK1_DI M_SHI FT[1:0]		BUCK1_DI M_FADEOUT[2:0]			BUCK1_DI M_FADEI N[2:0]					BUCK1_DI M_DUTY[7:0]					
20	0x14	BUCK2_FREQ_RATE[1:0]		BUCK2_TOFF[6:0]								BUCK2_I RNG	BUCK2_I AVG[7:0]								BUCK2_EN
21	0x15	BUCK2_TSD_RCVR	BUCK2_RCVR[1:0]		BUCK2_SHORTLED_MASK[1:0]		VLED2_RNG	LEDCTRL2_MD[1:0]		BUCK2_I REG_PAUSE	BUCK2_FREQ_PAUSE	BUCK2_FREQ_RSP[1:0]		BUCK2_FREQ_FAST_RCVR	BUCK2_FREQ_ABOVE	BUCK2_FREQ[5:0]					
22	0x16	BUCK2_DCM_CORR[2:0]			BUCK2_ZCD_DI S	BUCK2_DI M_SHI FT[1:0]		BUCK2_DI M_FADEOUT[2:0]			BUCK2_DI M_FADEI N[2:0]					BUCK2_DI M_DUTY[7:0]					
23	0x17	BUCK3_FREQ_RATE[1:0]		BUCK3_TOFF[6:0]								BUCK3_I RNG	BUCK3_I AVG[7:0]								BUCK3_EN
24	0x18	BUCK3_TSD_RCVR	BUCK3_RCVR[1:0]		BUCK3_SHORTLED_MASK[1:0]		VLED3_RNG	LEDCTRL3_MD[1:0]		BUCK3_I REG_PAUSE	BUCK3_FREQ_PAUSE	BUCK3_FREQ_RSP[1:0]		BUCK3_FREQ_FAST_RCVR	BUCK3_FREQ_ABOVE	BUCK3_FREQ[5:0]					
25	0x19	BUCK3_DCM_CORR[2:0]			BUCK3_ZCD_DI S	BUCK3_DI M_SHI FT[1:0]		BUCK3_DI M_FADEOUT[2:0]			BUCK3_DI M_FADEI N[2:0]					BUCK3_DI M_DUTY[7:0]					
26	0x1A												BUCK3_REGFAI L_FMASK	BUCK3_OPENLED_FMASK	BUCK3_SHORTLED_FMASK	BUCK2_REGFAI L_FMASK	BUCK2_OPENLED_FMASK	BUCK2_SHORTLED_FMASK	BUCK1_REGFAI L_FMASK	BUCK1_OPENLED_FMASK	BUCK1_SHORTLED_FMASK
27	0x1B	EEPROM_LOCK_CUST				CRC_EEPROM_CUST[15:0]															

	Customer
	Unused

Figure 32. NCV78935 EEPROM MEMORY MAP

EEPROM memory serves as persistent storage for Customer configuration and for **onsemi** calibration, trimming and test data. EEPROM memory is organized as 20 bits wide words with word-based access.

EEPROM Operations

The NCV78935 supports following operations with EEPROM memory:

- EEPROM_CTRL[3:0] = 0xxx [binary]: EEPROM in Power-down state (no operation)
- EEPROM_CTRL[3:0] = 1xxx [binary]: **Enable**
- EEPROM_CTRL[3:0] = 1001 [binary]: **Read** − data addressed by SPI register EEPROM_ADDRESS[4:0] become available in SPI register EEPROM_DATA_READ[19:0] after end of Read operation
- EEPROM_CTRL[3:0] = 1110 [binary]: **Unlock Write**
- EEPROM_CTRL[3:0] = 1010 [binary]: **Write** − data in EEPROM_DATA_WRITE[19:0] SPI register will be written into address EEPROM_ADDRESS[4:0]

EEPROM Read Operation

The correct sequence to Read data from EEPROM memory should be the following:

- Write **'Enable'** (0x8) into EEPROM_CTRL[3:0] SPI register to bring EEPROM memory into powered state
- Read EEPROM_CTRL[3:0] SPI register and check that it is **'Enable'** (0x8)
- Wait until EEPROM_BUSY is 0 (EEPROM power-up time is app. 30 μs)
- Write required address into EEPROM_ADDRESS[4:0] SPI register and write **'Read'** (0x9) into EEPROM_CTRL[3:0] SPI register to perform Read command
- Read EEPROM_CTRL[3:0] SPI register and check that it is **'Read'** (0x9) and read EEPROM_ADDRESS[4:0] SPI register and check that it is correct
- Read data at EEPROM_DATA_READ[19:0] SPI register
- Repeat reading from all required addresses
- Write 'Power down' (0x0) into EEPROM_CTRL[3:0] SPI register to put EEPROM memory into power-down mode
- To check that all content was written correctly

EEPROM Write Operation

The correct sequence to Write data from EEPROM memory should be the following:

- Write **'Enable'** (0x8) into EEPROM_CTRL[3:0] SPI register to bring EEPROM memory into powered state
- Read EEPROM_CTRL[3:0] SPI register and check that it is **'Enable'** (0x8)
- Wait until EEPROM_BUSY is 0 (EEPROM power-up time is app. 30 μs)
- Write required data into EEPROM_DATA_WRITE[19:0] SPI register
- Read data at EEPROM_DATA_WRITE[19:0] SPI register and check if the content is correct
- Write **'Unlock Write'** (0xE) into EEPROM_CTRL[3:0] SPI register to enable write
- Read EEPROM_CTRL[3:0] SPI register and check that it is **'Unlock Write'** (0xE)
- Write required address into EEPROM_ADDRESS[4:0] SPI register and write **'Write'** (0xA) into EEPROM_CTRL[3:0] SPI register to perform Write command
- Read EEPROM_CTRL[3:0] SPI register and check that it is **'Write'** (0xA) and read EEPROM_ADDRESS[4:0] SPI register and check that it is correct
- Wait until EEPROM_BUSY is 0 (EEPROM word programming time is app. 9.2 ms)
- Check that EEPROM_WRITEFAIL is 0. Discard the device if EEPROM_WRITEFAIL is 1.
- Repeat writing into all required addresses
- Read and check EEPROM data from all written addresses
- Write 'Power down' (0x0) into EEPROM_CTRL[3:0] SPI register to put EEPROM memory into power-down mode

To provide extra safety, CRC protection is implemented to secure EEPROM memory content. The following CRC checks are implemented:

CRC_EEPROM_TRIM[15:0] is calculated internally over **onsemi** trimming and calibration data.

CRC_EEPROM_CUST[15:0] (ADDR_0x14 or ADDR_0x1B) is calculated over all EEPROM Customer data. For NCV78935 starting from MSB bit 0 on EEPROM address ADDR_0x10 and ending at bit 8 of EEPROM address ADDR_0x1A.

CRC algorithm with following parameters is used:

- CRC length is 16 bits,
- CRC polynomial 0xBAAD (Koopman's notation; x16+x14+x13+x12+x10+x8+x6+x4+x3+x+1),
- CRC initialization value 0xFFFF.

External microcontroller should calculate its own CRC from the appropriate EEPROM data and verify that calculated CRC matches with CRC stored in EEPROM.

Share Feedback
Your Opinion Matters

PCB LAYOUT RECOMMENDATIONS

This section contains instructions for the NCV78935 PCB layout application design. Although this guide does not claim to be exhaustive, these directions can help the developer to reduce application noise impact and ensuring the best system operation. All important areas are highlighted on the following picture:

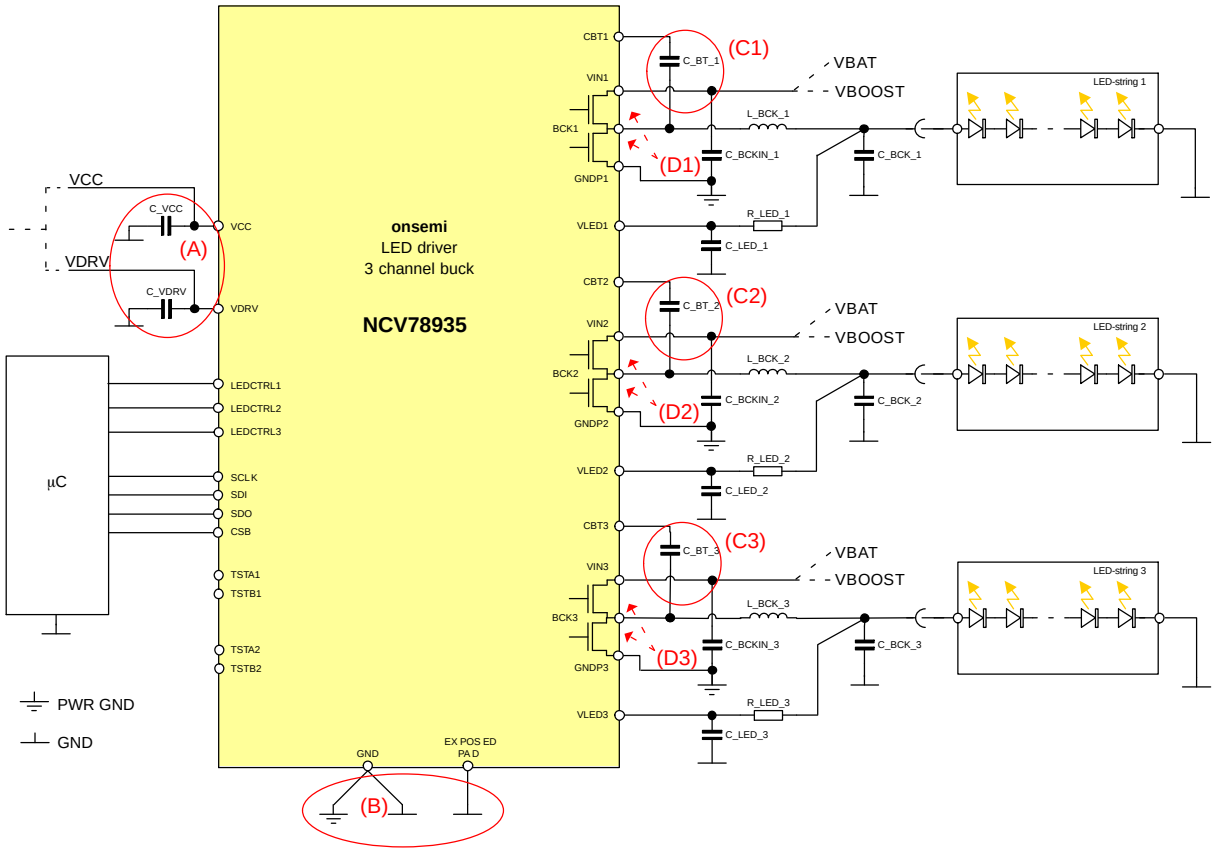

Figure 33. NCV78935 Application Critical PCB Areas

PCB Layout: VDD and VDRV Capacitors − Area (A)

The VDD decoupling capacitor has to be connected directly to the VDD and ground pins with separate PCB tracks to avoid coupling of the ground shift on the PCB into the chip.

PCB Layout: GND Connections − (B)

Ground connection between VINx decoupling capacitor and power GNDPx pins of NCV78935 device should be kept as short as possible to minimize power switching loop.

PCB Layout: Buck Bootstrap Capacitors − (C1, C2, C3)

CBT capacitors should be placed as close as possible to the CBTx and BCKx pins.

PCB Layout: Buck Power Lines − (D1, D2, D3)

VINx decoupling capacitors should be placed as close as possible to VINx pins and the tracks from BCKx pins to Buck inductors should be kept as short as possible. They also should be symmetrical and the straightest.

Recommended PCB layout for the NCV78935 is shown on the following figures. This layout comes from NCV78935 evaluation kit daughterboards which serve as a reference layout and where more details can be found if needed. This layout contains some extra components which would be avoided in final design (e.g. zero-ohm link selecting voltage for VDD logic supply, testpoints, etc.).

Share Feedback
Your Opinion Matters

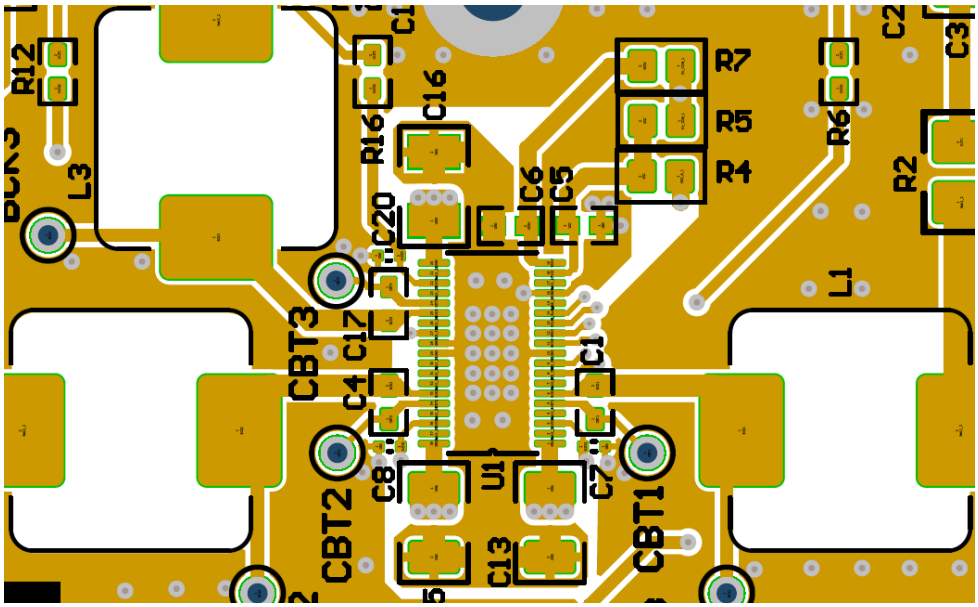

Figure 34. NCV78935 Bottom Side Exposed Pad Reference PCB Layout (Top View)

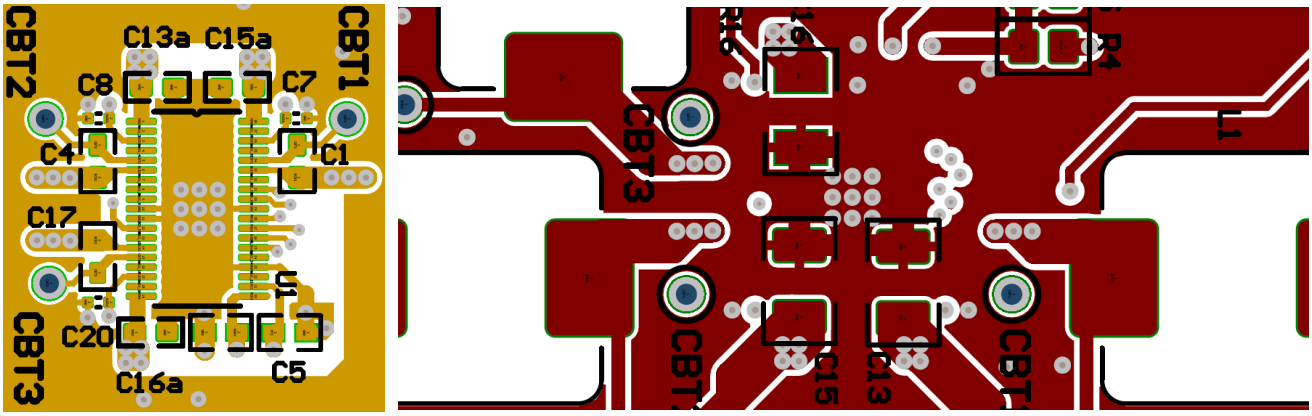

Figure 35. NCV78935 Top Side Exposed Pad Reference PCB Layout (Top and Bottom View)

Share Feedback
Your Opinion Matters

ORDERING INFORMATION

Device Order Number	Specific Device Marking	Package Type	Shipping†
NCV78935PA0R2G	N7935 1	TSSOP38 EP (Pb-Free)	2500 / Tape & Reel
NCV78935PA1R2G	N93502	TSSOP38 TEP (Pb-Free)	2500 / Tape & Reel

* For additional information on our Pb-Free strategy and soldering details, please download the **onsemi** Soldering and Mounting Techniques Reference Manual, SOLDERRM/D.

† For information on tape and reel specifications, including part orientation and tape sizes, please refer to our Tape and Reel Packaging Specifications Brochure, BRD8011/D.

Share Feedback
Your Opinion Matters

REVISION HISTORY

Revision	Description of Changes	Date
0	Initial document release.	12/5/2025

Share Feedback
Your Opinion Matters

TSSOP38 EP 9.7x4.4
CASE 137AB
ISSUE O

DATE 05 JUN 2019

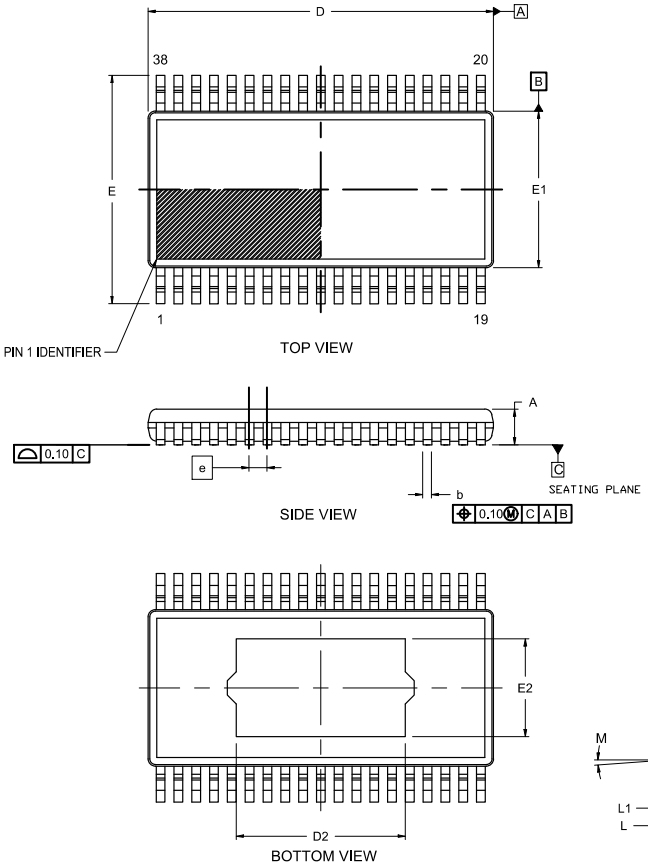

NOTES:

1. DIMENSIONING AND TOLERANCING PER ASME Y14.5M, 2009.
2. CONTROLLING DIMENSION: MILLIMETERS
3. DIMENSIONS D AND E1 DO NOT INCLUDE MOLD PROTRUSION.
4. MAXIMUM MOLD PROTRUSION 0.15mm PER SIDE.
5. DIMENSION b DOES NOT INCLUDE DAMBAR PROTRUSION. ALLOWABLE DAMBAR PROTRUSION SHALL NOT BE IN 0.13 TOTAL IN EXCESS OF b DIMENSION AT MAXIMUM MATERIAL CONDITION.

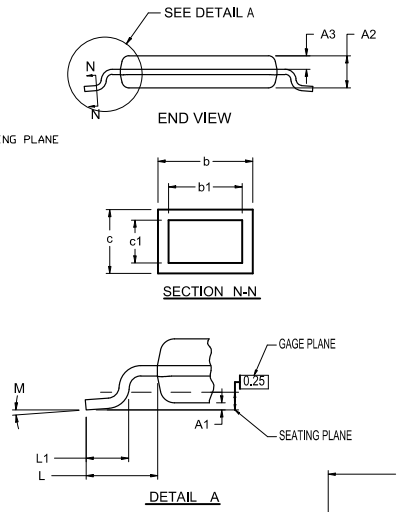

DIM	MILLIMETERS		
	MIN.	NOM.	MAX.
A	---	---	1.10
A1	0.05	0.10	0.15
A2	0.85	0.90	0.95
A3	0.34	---	0.43
b	0.17	---	0.27
b1	0.20 REF		
c	0.09	---	0.20
c1	0.127 REF		
D	9.60	9.70	9.80
D2	4.496	4.750	4.852
E	6.25	6.40	6.55
E1	4.30	4.40	4.50
E2	2.489	2.743	2.845
e	0.50 BSC		
L	1.00 REF		
L1	0.50	---	0.70
M	0°	---	8°

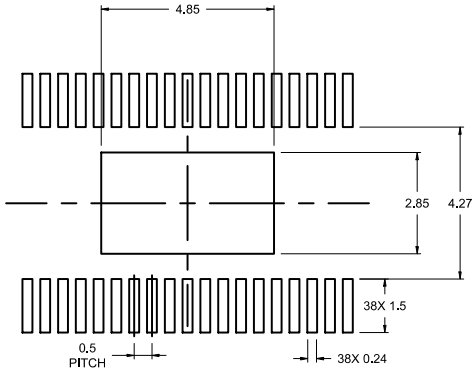

RECOMMENDED
MOUNTING FOOTPRINT*

* For additional information on our Pb−Free strategy and soldering details, please download the ON Semiconductor Soldering and Mounting Techniques Reference Manual, SOLDERRM/D.

GENERIC MARKING DIAGRAM*

XXXXX
XXXXX
ALYW
o

XXXX = Specific Device Code
A = Assembly Location
L = Wafer Lot
Y = Year
W = Work Week

*This information is generic. Please refer to device data sheet for actual part marking. Pb−Free indicator, "G" or microdot "▪", may or may not be present. Some products may not follow the Generic Marking.

DOCUMENT NUMBER:	98AON07976H	Electronic versions are uncontrolled except when accessed directly from the Document Repository. Printed versions are uncontrolled except when stamped "CONTROLLED COPY" in red.	
DESCRIPTION:	TSSOP38 EP 9.7x4.4		PAGE 1 OF 1

onsemi and onsemi are trademarks of Semiconductor Components Industries, LLC dba **onsemi** or its subsidiaries in the United States and/or other countries. **onsemi** reserves the right to make changes without further notice to any products herein. **onsemi** makes no warranty, representation or guarantee regarding the suitability of its products for any particular purpose, nor does **onsemi** assume any liability arising out of the application or use of any product or circuit, and specifically disclaims any and all liability, including without limitation special, consequential or incidental damages. **onsemi** does not convey any license under its patent rights nor the rights of others.

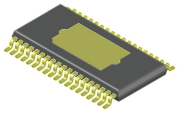

TSSOP38 TEP 9.7x4.4
CASE 948BX
ISSUE O

DATE 01 FEB 2021

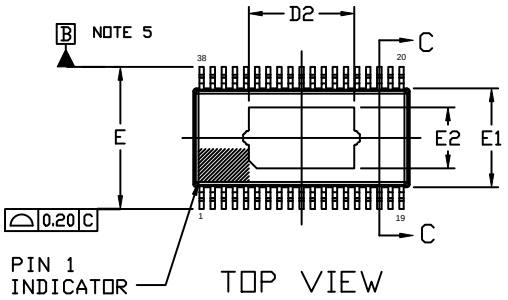

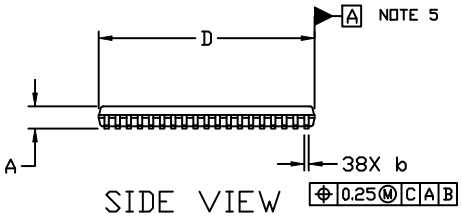

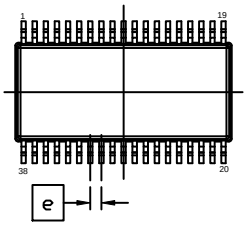

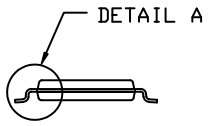

NOTES:
1. DIMENSIONING AND TOLERANCING PER ASME Y14.5M, 2009.
2. CONTROLLING DIMENSION: MILLIMETERS
3. DIMENSION b DOES NOT INCLUDE DAMBAR PROTRUSION. ALLOWABLE PROTRUSION SHALL BE 0.127 mm IN EXCESS OF MAXIMUM MATERIAL CONDITION.
4. DIMENSIONS D AND E1 DO NOT INCLUDE MOLD FLASH, PROTRUSIONS, OR GATE BURRS. MOLD FLASH, PROTRUSIONS, OR GATE BURRS SHALL NOT EXCEED 0.15 mm PER SIDE. DIMENSIONS D AND E1 ARE DETERMINED AT DATUM F.
5. DATUMS A AND B ARE TO BE DETERMINED AT DATUM F.
6. A1 IS DEFINED AS THE VERTICAL DISTANCE FROM THE SEATING PLANE TO THE LOWEST POINT ON THE PACKAGE BODY.
7. LEAD THICKNESS (c) AND LEAD WIDTH (b) INCLUDE PLATING THICKNESS.

DIM	MILLIMETERS		
	MIN.	NOM.	MAX.
A	---	---	1.10
A1	0.05	---	0.15
A2	0.85	---	0.95
b	0.17	---	0.27
c	0.09	---	0.20
D	9.60	9.70	9.80
D2	4.496	---	4.852
E	6.25	6.40	6.55
E1	4.30	4.40	4.50
E2	2.489	---	2.845
e	0.50 BSC		
L	0.50	---	---
L1	1.00 REF		
L2	0.25 REF		
M	0°	---	8°

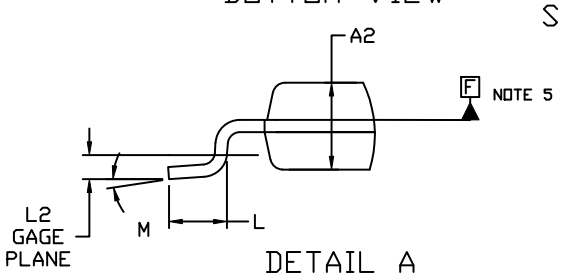

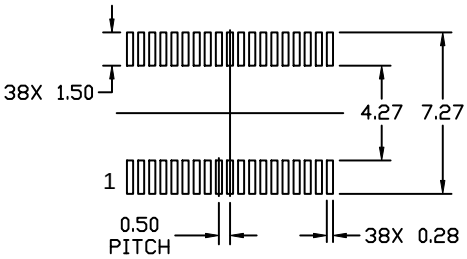

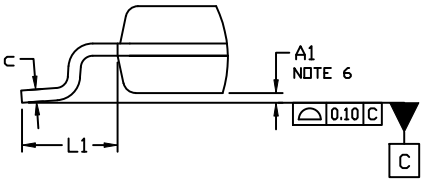

* For additional information on our Pb-Free strategy and soldering details, please download the ON Semiconductor Soldering and Mounting Techniques Reference Manual, SOLDERRM/D.

DOCUMENT NUMBER:	**98AON28751H**	Electronic versions are uncontrolled except when accessed directly from the Document Repository. Printed versions are uncontrolled except when stamped "CONTROLLED COPY" in red.
DESCRIPTION:	**TSSOP38 TEP 9.7x4.4**	**PAGE 1 OF 1**

onsemi and onsemi are trademarks of Semiconductor Components Industries, LLC dba **onsemi** or its subsidiaries in the United States and/or other countries. **onsemi** reserves the right to make changes without further notice to any products herein. **onsemi** makes no warranty, representation or guarantee regarding the suitability of its products for any particular purpose, nor does **onsemi** assume any liability arising out of the application or use of any product or circuit, and specifically disclaims any and all liability, including without limitation special, consequential or incidental damages. **onsemi** does not convey any license under its patent rights nor the rights of others.

onsemi, onsemi, and other names, marks, and brands are registered and/or common law trademarks of Semiconductor Components Industries, LLC dba "**onsemi**" or its affiliates and/or subsidiaries in the United States and/or other countries. **onsemi** owns the rights to a number of patents, trademarks, copyrights, trade secrets, and other intellectual property. A listing of **onsemi**'s product/patent coverage may be accessed at www.onsemi.com/site/pdf/Patent−Marking.pdf. **onsemi** reserves the right to make changes at any time to any products or information herein, without notice. The information herein is provided "as−is" and **onsemi** makes no warranty, representation or guarantee regarding the accuracy of the information, product features, availability, functionality, or suitability of its products for any particular purpose, nor does **onsemi** assume any liability arising out of the application or use of any product or circuit, and specifically disclaims any and all liability, including without limitation special, consequential or incidental damages. Buyer is responsible for its products and applications using **onsemi** products, including compliance with all laws, regulations and safety requirements or standards, regardless of any support or applications information provided by **onsemi**. "Typical" parameters which may be provided in **onsemi** data sheets and/or specifications can and do vary in different applications and actual performance may vary over time. All operating parameters, including "Typicals" must be validated for each customer application by customer's technical experts. **onsemi** does not convey any license under any of its intellectual property rights nor the rights of others. **onsemi** products are not designed, intended, or authorized for use as a critical component in life support systems or any FDA Class 3 medical devices or medical devices with a same or similar classification in a foreign jurisdiction or any devices intended for implantation in the human body. Should Buyer purchase or use **onsemi** products for any such unintended or unauthorized application, Buyer shall indemnify and hold **onsemi** and its officers, employees, subsidiaries, affiliates, and distributors harmless against all claims, costs, damages, and expenses, and reasonable attorney fees arising out of, directly or indirectly, any claim of personal injury or death associated with such unintended or unauthorized use, even if such claim alleges that **onsemi** was negligent regarding the design or manufacture of the part. **onsemi** is an Equal Opportunity/Affirmative Action Employer. This literature is subject to all applicable copyright laws and is not for resale in any manner.

ADDITIONAL INFORMATION

TECHNICAL PUBLICATIONS:
Technical Library: www.onsemi.com/design/resources/technical−documentation
onsemi Website: www.onsemi.com

ONLINE SUPPORT: www.onsemi.com/support
For additional information, please contact your local Sales Representative at
www.onsemi.com/support/sales